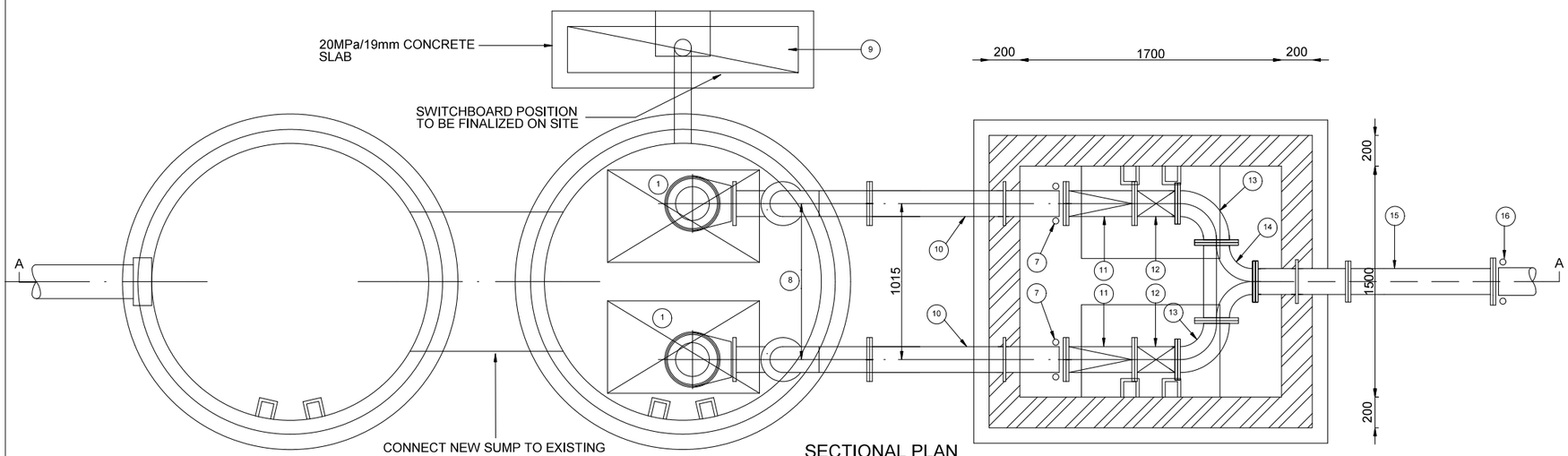

SECTIONAL PLAN

SCALE 1:20

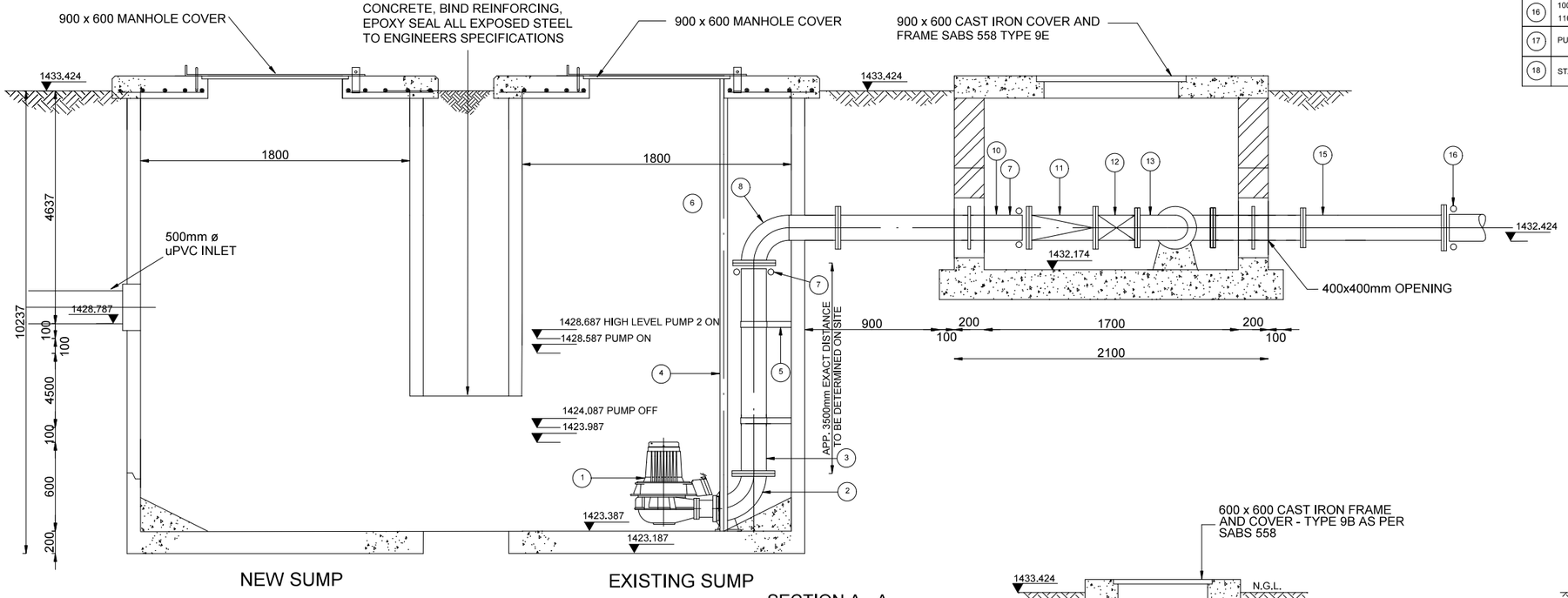

NEW SUMP

EXISTING SUMP

SECTION A - A

N.T.S

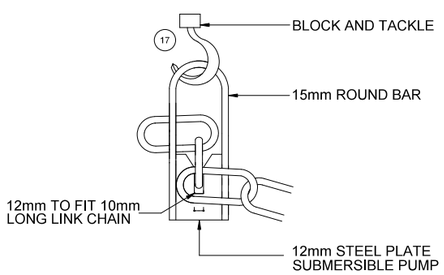

LIFTING CHAIN BRACKET

N.T.S

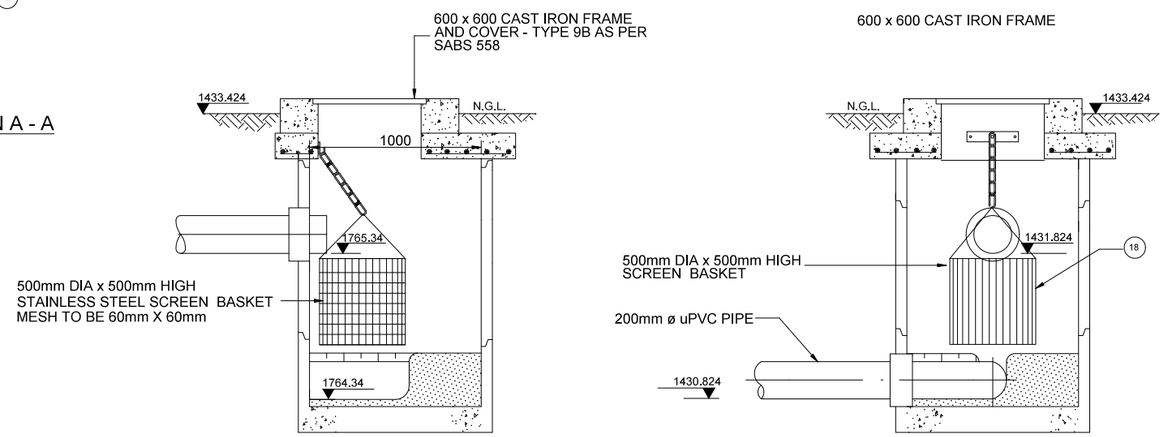

DETAIL OF SCREEN BASKET MANHOLE

SCALE 1:35

EQUIPMENT SCHEDULE

No.	DESCRIPTION	QUANTITY
1	SUBMERSIBLE SEWAGE PUMP (ABS MODEL AFP 1049,A M90/4)	2
2	DUCKFOOT BEND AND PEDESTAL	2
3	100 VERTICAL RISER PIPE + REDUCER TO SUIT: FBE	2
4	PUMP GUIDE RAILS	2 X SETS
5	PIPE SUPPORT	4
6	STAINLESS STEEL LIFTING CHAINS (NOT SHOWN)	2
7	100 VIKING-JOHNSON FLANGED ADAPTOR	4
8	100 BEND + PIPE: FBE	2
9	FRAME-MOUNTED SWITCH BOARD AND CONCRETE PLINTHS TO SUIT. POSITION TO BE CONFIRMED	1
10	100 PUDDLE PIPE: ONE END FLANGED	2
11	100 SWING-TYPE CHECK VALVE.	2
12	100 GATE VALVE.	2
13	100 PIPE + BEND: FBE	2
14	100 TEE-PIECE: FAE.	1
15	100 PUDDLE PIPE: FBE	2
16	100 VIKING-JOHNSON FLANGED ADAPTOR: TO SUIT 110mm uPVC PIPE CLASS- 9.	1
17	PUMP-LIFTING CHAIN BRACKET AS PER DETAIL	1
18	STAINLESS STEEL SCREEN BASKET + LIFTING CHAINS	1

DRAWING REFERENCE

No	Drg No	Title

NOTES

1. FIGURED DIMENSIONS ON DRAWINGS TO BE GIVEN PRIORITY OVER SCALING.
2. ANY OMISSIONS, DISCREPANCIES OR ERRORS TO BE IMMEDIATELY REPORTED TO THE ENGINEER.
3. CONTRACTOR TO CHECK AND VERIFY SUFFICIENCY OF INFORMATION SHOWN ON THE DRAWING AND DIMENSIONS BEFORE COMMENCING WORK.
4. SHOULD THE CONTRACTOR PROCEED WITHOUT THE ABOVE APPROVALS HE DOES SO ENTIRELY AT HIS OWN RISK.
5. PIPING TO BE COPON COATED MILD STEEL FLANGED TO SABS 1123 T1000/3
6. BENDS TO BE LONG RADIUS TYPE
7. DIMENSIONS TO BE CONFIRMED ON WORK DRAWINGS BY CONTRACTOR PRIOR TO CONSTRUCTION
8. TBC = TO BE CONFIRMED ON SITE
9. FBE = FLANGED BOTH ENDS
10. FAE = FLANGED ALL ENDS
11. ALL LEVELS NEED TO BE CONFIRMED BY THE ENGINEER ON SITE

No	Description	Date	By

FOR TENDER PURPOSES

Recommended by | Date

Approved by | Date

Drawn | Designed

Checked | Engineer

Client App. | Date

SCALE: AS SHOWN

Client: JOE GQABI DISTRICT MUNICIPALITY

Contract: JGDM 2013/14 - 018

Title: STERKSPRUIT RBIG BULK SEWERAGE PROJECT

MOGHESI TOWNSHIP PHASE 1

PUMPSTATION 1 PIPE DETAILS

DIBANANI CONSULTING

09-DIB-083-2023

Drawing No

Rev No