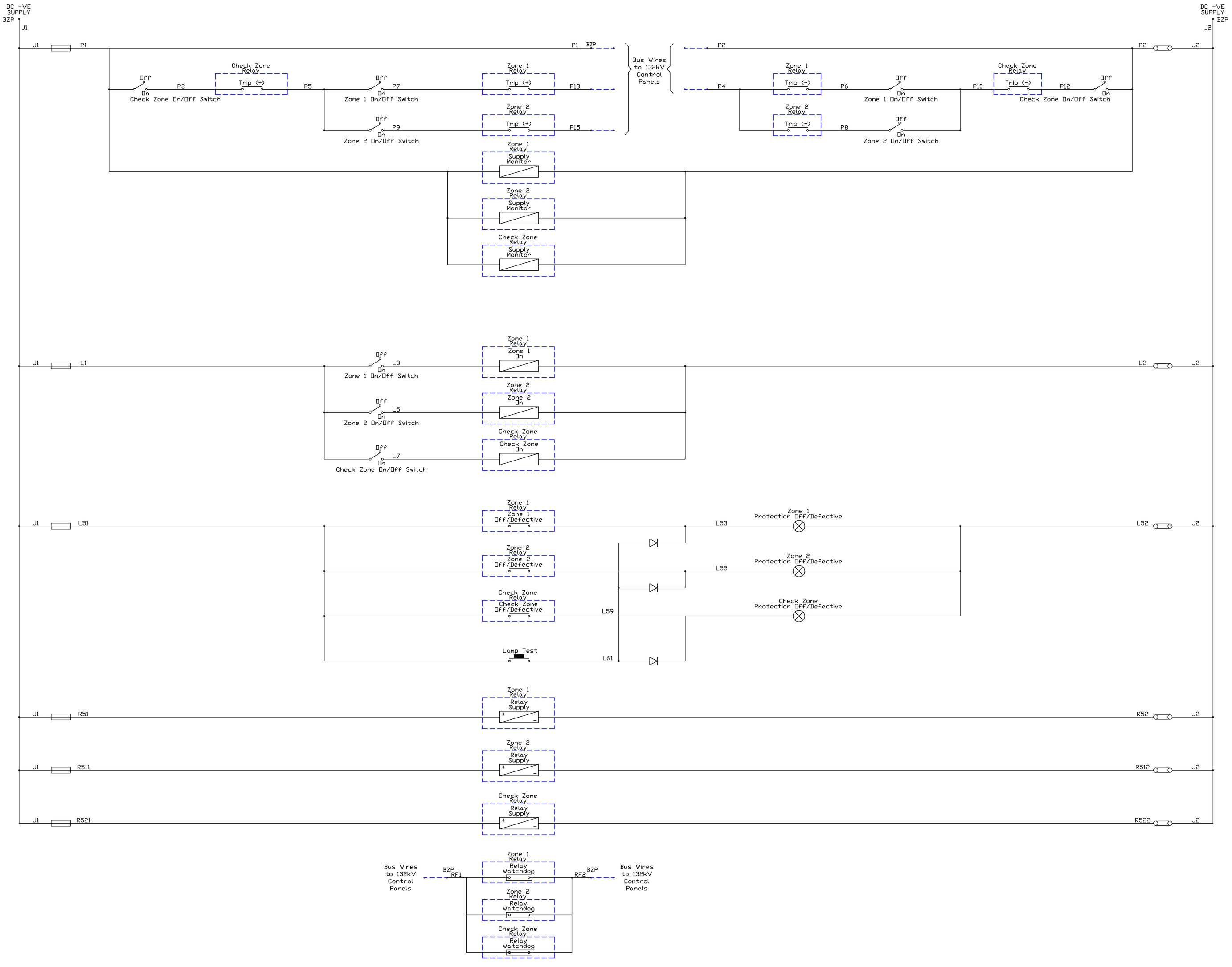

NOTES:

1. The purpose of this drawing is to clarify the requirements of the associated contract/enquiry specification. The issue of this with the specification does not absolve the successful contractor from his normal responsibility to provide a satisfactory scheme nor to submit drawings of systems proposed for approval by the engineer.

2. All relays have been shown de-energised with switches open.

3. This drawing will enable the different contractors to co-ordinate their respective systems with associated equipment. For this reason ferrule numbers of interconnecting points must be strictly adhered to. Where absolutely necessary ferrule numbers of connectors not associated with equipment on other contract may be added or altered.

LEGEND

TMK	Transformer Marshalling Kiosk
TCCP	Tap Change Control Panel
TCM	Tap Change Mechanism
VR Relay	Voltage Regulating Relay
CB	Circuit Breaker
BB1	Busbar 1
BB2	Busbar 2
PB	Push Button
S/V	Supervisory
BCD	Binary Coded Decimal
OC	Over Current
<V	Under Voltage
R	Resistor

Fuse
Link
Control Switch
Push Button
Relay Digital Input
Relay Analog Input
Normally Open Contact
Normally Closed Contact
Current Transformer

DRAWN	A.J.R.W.				
DATE	17.06.2005				
TRACED		REFERENCE DRAWINGS:	1	ADDED CHECK ZONE FOR BB PROTECTION	ML 17/09/2014
			REVISIONS:	BY:	DATE:
CHIEF DRAUGHTSMAN		ETHEKWINI ELECTRICITY			
PLANNING OFFICER					
PROTECTION ENGINEER		DC SCHEMATIC FOR 132kV 2 ZONE BUSBAR PROTECTION			
PLAN./PROJ. ENGINEER					
PLAN./PROJ. MANAGER					
APPROVED A.J. SOLD DIRECTOR TRANSMISSION		SCALE: N.T.S.	DRAWING NUMBER: TD 27		REV: 1