**TRANSNET PORT TERMINALS**

an Operating Division of **TRANSNET SOC LTD**

[hereinafter referred to as **Transnet]**

Registration Number 1990/000900/30

**REQUEST FOR QUOTATION [RFQ] No 11392948**

**FOR THE SUPPLY OF PIPE METAL; TELESCOPE; UNKNOWN, ELMEC FOR TRANSNET SOC LTD (REG. NO. 1990/000900/30) OPERATING AS TRANSNET PORT TERMINALS AT THE PORT OF RICHARDS BAY.**

| | |
|---|---|
| **ISSUE DATE:** | **20 JANUARY 2025** |
| **CLOSING DATE:** | **22 JANUARY 2025** |
| **CLOSING TIME:** | **12:00 PM** |

**Note to the bidders:**

***Bidders are required to ensure that electronic bid submissions are done at least a day before the closing date to prevent issues which they may encounter due to their internet speed, bandwidth or the size of the number of uploads they are submitting. Transnet will not be held liable for any challenges experienced by bidders as a result of the technical challenges. Please do not wait for the last hour to submit. A Bidder can upload 30mb per upload and multiple uploads are permitted.***

## SECTION 1: SBD1 FORM

### PART A
### INVITATION TO BID

| YOU ARE HEREBY INVITED TO BID FOR REQUIREMENTS OF TRANSNET PORT TERMINALS, A DIVISION TRANSNET SOC LTD | | | | | | | |
|---|---|---|---|---|---|---|---|
| BID NUMBER: | 11392948 | ISSUE DATE: | **20 JAN 2025** | CLOSING DATE: | **22 JAN 2025** | CLOSING TIME: | **12:00pm** |
| DESCRIPTION | **FOR THE SUPPLY OF PIPE METAL; TELESCOPE; UNKNOWN, ELMEC FOR TRANSNET SOC LTD (REG. NO. 1990/000900/30) OPERATING AS TRANSNET PORT TERMINALS AT THE PORT OF RICHARDS BAY.** | | | | | | |

**BID RESPONSE DOCUMENTS SUBMISSION**

Transnet has implemented a new electronic tender submission system, the e-Tender Submission Portal, in line with the overall Transnet digitalization strategy where suppliers can view advertised tenders, register their information, log their intent to respond to bids and upload their bid proposals/responses on to the system.

**RESPONDENTS ARE TO UPLOAD THEIR BID RESPONSE PROPOSALS ONTO THE TRANSNET SYSTEM AGAINST EACH TENDER/RFQ SELECTED.**

The Transnet e-Tender Submission Portal can be accessed as follows:

- Log on to the Transnet eTenders management platform website/Portal (transnetetenders.azurewebsites.net) (please use **Google Chrome** to access Transnet link/site free of charge);
- Click on "ADVERTISED TENDERS" to view advertised tenders;
- Click on "SIGN IN/REGISTER – for bidder to register their information (must fill in all mandatory information);
- Click on "SIGN IN/REGISTER" - to sign in if already registered;
- Toggle (click to switch) the "Log an Intent" button to submit a bid;
- Submit bid documents by uploading them into the system against each tender selected.
- No late submissions will be accepted. The bidder guide can be found on the Transnet Portal transnetetenders.azurewebsites.net

| BIDDING PROCEDURE ENQUIRIES MAY BE DIRECTED TO | | TECHNICAL ENQUIRIES MAY BE DIRECTED TO: | |
|---|---|---|---|
| CONTACT PERSON | **Sipho Ndlovu** | CONTACT PERSON | |
| TELEPHONE NUMBER | **035 905 3987** | TELEPHONE NUMBER | |
| FACSIMILE NUMBER | **n/a** | FACSIMILE NUMBER | |
| E-MAIL ADDRESS | **Sipho.ndlovu@transnet.net** | E-MAIL ADDRESS | |

| SUPPLIER INFORMATION | | | | |
|---|---|---|---|---|
| NAME OF BIDDER | | | | |
| POSTAL ADDRESS | | | | |
| STREET ADDRESS | | | | |
| TELEPHONE NUMBER | CODE | | NUMBER | |
| CELLPHONE NUMBER | | | | |
| FACSIMILE NUMBER | CODE | | NUMBER | |
| E-MAIL ADDRESS | | | | |
| VAT REGISTRATION NUMBER | | | | |

| | | | | | |
|---|---|---|---|---|---|
| SUPPLIER COMPLIANCE STATUS | TAX COMPLIANCE SYSTEM PIN: | | **OR** | CENTRAL SUPPLIER DATABASE | UNIQUE REGISTRATION REFERENCE NUMBER:<br><br>MAAA |
| B-BBEE STATUS LEVEL VERIFICATION CERTIFICATE | TICK APPLICABLE BOX]<br><br>☐ Yes ☐ No | | B-BBEE STATUS LEVEL SWORN AFFIDAVIT | [TICK APPLICABLE BOX]<br><br>☐ Yes ☐ No | |
| ***[A B-BBEE STATUS LEVEL VERIFICATION CERTIFICATE/ SWORN AFFIDAVIT MUST BE SUBMITTED FOR PURPOSES OF COMPLIANCE WITH THE B-BBEE ACT]*** | | | | | |
| **1** ARE YOU THE ACCREDITED REPRESENTATIVE IN SOUTH AFRICA FOR THE GOODS /SERVICES /WORKS OFFERED? | ☐Yes ☐No<br><br>[IF YES ENCLOSE PROOF] | | **2** ARE YOU A FOREIGN BASED SUPPLIER FOR **THE GOODS /SERVICES /WORKS OFFERED?** | ☐Yes ☐No<br><br>[IF YES, ANSWER QUESTIONAIRE BELOW] | |
| **QUESTIONNAIRE TO BIDDING FOREIGN SUPPLIERS** | | | | | |
| IS THE ENTITY A RESIDENT OF THE REPUBLIC OF SOUTH AFRICA (RSA)? | | | | ☐ YES ☐ NO | |
| DOES THE ENTITY HAVE A BRANCH IN THE RSA? | | | | ☐ YES ☐ NO | |
| DOES THE ENTITY HAVE A PERMANENT ESTABLISHMENT IN THE RSA? | | | | ☐ YES ☐ NO | |
| DOES THE ENTITY HAVE ANY SOURCE OF INCOME IN THE RSA? | | | | ☐ YES ☐ NO | |
| IS THE ENTITY LIABLE IN THE RSA FOR ANY FORM OF TAXATION? | | | | ☐ YES ☐ NO | |
| **IF THE ANSWER IS "NO" TO ALL OF THE ABOVE, THEN IT IS NOT A REQUIREMENT TO REGISTER FOR A TAX COMPLIANCE STATUS SYSTEM PIN CODE FROM THE SOUTH AFRICAN REVENUE SERVICE (SARS) AND IF NOT REGISTER AS PER 1.3 BELOW.** | | | | | |

# PART B
# TERMS AND CONDITIONS FOR BIDDING

| **1.** | **TAX COMPLIANCE REQUIREMENTS** |
|---|---|
| 1.1 | BIDDERS MUST ENSURE COMPLIANCE WITH THEIR TAX OBLIGATIONS. |
| 1.2 | BIDDERS ARE REQUIRED TO SUBMIT THEIR UNIQUE PERSONAL IDENTIFICATION NUMBER (PIN) ISSUED BY SARS TO ENABLE THE ORGAN OF STATE TO VERIFY THE TAXPAYER'S PROFILE AND TAX STATUS. |
| 1.3 | APPLICATION FOR TAX COMPLIANCE STATUS (TCS) PIN MAY BE MADE VIA E-FILING THROUGH THE SARS WEBSITE WWW.SARS.GOV.ZA. |
| 1.4 | BIDDERS MAY ALSO SUBMIT A PRINTED TCS CERTIFICATE TOGETHER WITH THE BID. |
| 1.5 | IN BIDS WHERE UNINCORPORATED CONSORTIA / JOINT VENTURES / SUB-CONTRACTORS ARE INVOLVED; EACH PARTY MUST SUBMIT A SEPARATE TCS CERTIFICATE / PIN / CSD NUMBER. |
| 1.6 | WHERE NO TCS IS AVAILABLE BUT THE BIDDER IS REGISTERED ON THE CENTRAL SUPPLIER DATABASE (CSD), A CSD NUMBER MUST BE PROVIDED. |

**NB: FAILURE TO PROVIDE / OR COMPLY WITH ANY OF THE ABOVE PARTICULARS MAY RENDER THE BID INVALID**.

SIGNATURE OF BIDDER: ……

CAPACITY UNDER WHICH THIS BID IS SIGNED: ……

(Proof of authority must be submitted e.g. company resolution)

DATE:_____

## SECTION 2: NOTICE TO BIDDERS

---

### 1 Responses to RFQ

Responses to this RFQ [**Quotations]** must not include documents or reference relating to any other quotation or proposal. Any additional conditions must be embodied in an accompanying letter.

### 2 Formal Briefing

A formal briefing session will be not held, should Respondents have specific queries they should email these to the Transnet employee(s) indicated in paragraph 3 *[Communication]* below:

### 3 Communication

3.1 Specific queries relating to this RFQ before the closing date of the RFQ should be submitted onto the system and to sipho.ndlovu@transnet.net before **12:00 pm on 21 JANUARY 2025**. In the interest of fairness and transparency Transnet's response to such a query will then be made available to other bidders.

3.2 It is prohibited for Respondents to attempt, either directly or indirectly, to canvass any officer or employee of Transnet in respect of this RFQ between the closing date and the date of the award of the business.

3.3 Respondents found to be in collusion with one another will be automatically disqualified and restricted from doing business with organs of state for a specified period.

3.4 Respondents may also, at any time after the closing date of the RFQ, communicate with the Sipho Ndlovu on any matter relating to its RFQ response:

Telephone 035 905 3987 Email: sipho.ndlovu@transnet.net

3.5 All unsuccessful bidders have a right to request Transnet to furnish individual reasons for their bid not being successful. This requested must be directed to the contact person stated in the SBD 1 form

### 4 Legal Compliance

The successful Respondent shall be in full and complete compliance with any and all applicable national and local laws and regulations.

### 5 Employment Equity Act

Respondents must comply with the requirements of the Employment Equity Act 55 of 1998 applicable to it including (but not limited to) Section 53 of the Employment Equity Act.

### 6 Changes to Quotations

Changes by the Respondent to its submission will not be considered after the closing date and time.

### 7 Binding Offer

Any Quotation furnished pursuant to this Request shall be deemed to be an offer. Any exceptions to this statement must be clearly and specifically indicated.

### 8 Disclaimers

8.1 Respondents are hereby advised that Transnet is not committed to any course of action as a result of its issuance of this RFQ and/or its receipt of a Quotation in response to it. Please note that Transnet reserves the right to:

- modify the RFQ's goods / service(s) and request Respondents to re-bid on any changes;

- reject any Quotation which does not conform to instructions and specifications which are detailed herein;
- disqualify Quotations submitted after the stated submission deadline;
- not necessarily accept the lowest priced Quotation or an alternative bid;
- place an order in connection with this Quotation at any time after the RFQ's closing date;
- award only a portion of the proposed goods / services which are reflected in the scope of this RFQ;
- split the award of the order/s between more than one Supplier/Service Provider should it at Transnet's discretion be more advantageous in terms of, amongst others, cost or developmental considerations;
- cancel the quotation process;
- validate any information submitted by Respondents in response to this bid. This would include, but is not limited to, requesting the Respondents to provide supporting evidence. By submitting a bid, Respondents hereby irrevocably grant the necessary consent to Transnet to do so;
- request audited financial statements or other documentation for the purposes of a due diligence exercise;
- not accept any changes or purported changes by the Respondent to the bid rates after the closing date and/or after the award of the business, unless the contract specifically provides for it;
- to cancel the contract and/request that National Treasury place the Respondent on its Database of Restricted Suppliers for a period not exceeding 10 years, on the basis that a contract was awarded on the strength of incorrect information furnished by the Respondent or on any other basis recognised in law;
- award the business to the next ranked bidder, provided that he/she is still prepared to provide the required Goods/Services at the quoted price, should the preferred bidder fail to sign or commence with the contract within a reasonable period after being requested to do so. Under such circumstances, the validity of the bids of the next ranked bidder(s) will be deemed to remain valid, irrespective of whether the next ranked bidder(s) were notified of their bid being unsuccessful. Bidders may therefore be requested to advise whether they would still be prepared to provide the required Goods/Services at their quoted price.
- Should a bidder fail to respond to a request for extension of the validity period before it expires, that bidder will be excluded from tender process.

## 9 Specification/Scope of Work

Kindly refer to Annexure A – scope of work

## 10 Legal review

A Proposal submitted by a Respondent will be subjected to review and acceptance or rejection of its proposed contractual terms and conditions by Transnet's Legal Counsel, prior to consideration for an award of business.

## 11 Security clearance

Acceptance of this bid could be subject to the condition that the Successful Respondent, its personnel providing the goods and its subcontractor(s) must obtain security clearance from the appropriate authorities to the level of CONFIDENTIAL/ SECRET/TOP SECRET. Obtaining the required clearance is the responsibility of the Successful Respondent. Acceptance of the bid is also subject to the condition that the Successful Respondent will implement all such security measures as the safe performance of the contract may require.

## 12 National Treasury's Central Supplier Database

Respondents are required to self-register on National Treasury's Central Supplier Database (CSD) which has been established to centrally administer supplier information for all organs of state and facilitate the verification of certain key supplier information. Transnet is required to ensure that price quotations are invited and accepted from prospective bidders listed on the CSD. Business may not be awarded to a respondent who has failed to register on the CSD. Only foreign suppliers with no local registered entity need not register on the CSD. The CSD can be accessed at https://secure.csd.gov.za/.

**For this purpose, the attached SBD 1 Form must be completed and submitted as a mandatory returnable document by the closing date and time of the bid.**

## 13 Tax Compliance

Respondents must be compliant when submitting a proposal to Transnet and remain compliant for the entire contract term with all applicable tax legislation, including but not limited to the Income Tax Act, 1962 (Act No. 58 of 1962) and Value Added Tax Act, 1991 (Act No. 89 of 1991).

It is a condition of this bid that the tax matters of the successful Respondents be in order, or that satisfactory arrangements have been made with South African Revenue Service (SARS) to meet the Respondents tax obligations.

The Tax Compliance status requirements are also applicable to foreign Respondents/ individuals who wish to submit bids.

Where Consortia / Joint Ventures / Sub-contractors are involved, each party must be registered on the Central Supplier Database and their tax compliance status will be verified through the Central Supplier Database.

**Transnet urges its clients, suppliers and the general public to report any fraud or corruption to**

**TIP-OFFS ANONYMOUS:**

Ethics Helpdesk (Pty) LTD.
Ethics Management System ™

**You can choose to be Anonymous or Non-Anonymous on ANY of the platforms**
**PLEASE RETAIN YOUR REFERENCE NUMBER**

**AI Voice BoT "Jack"**
Speak to our AI Voice Chat Bot "JACK", you converse with him like chatting to a human, with the option to record a message and speak to an agent at anytime.

**What's App**
Speak to an Agent via What's App.

**Speak to an Agent**
Speak to an Agent via the platform with no call or data charge

**Telegram**
Speak to an Agent via Telegram

**0800 003 056** | **086 551 4153** | **reportit@ethicshelpdesk.com** | ***120*0785980808#**

# SECTION 3

# EVALUATION METHODOLOGY, CRITERIA AND RETURNABLE DOCUMENTS

## 1 Evaluation Criteria

Transnet will utilise the following methodology and criteria in selecting a preferred Supplier/Service provider:

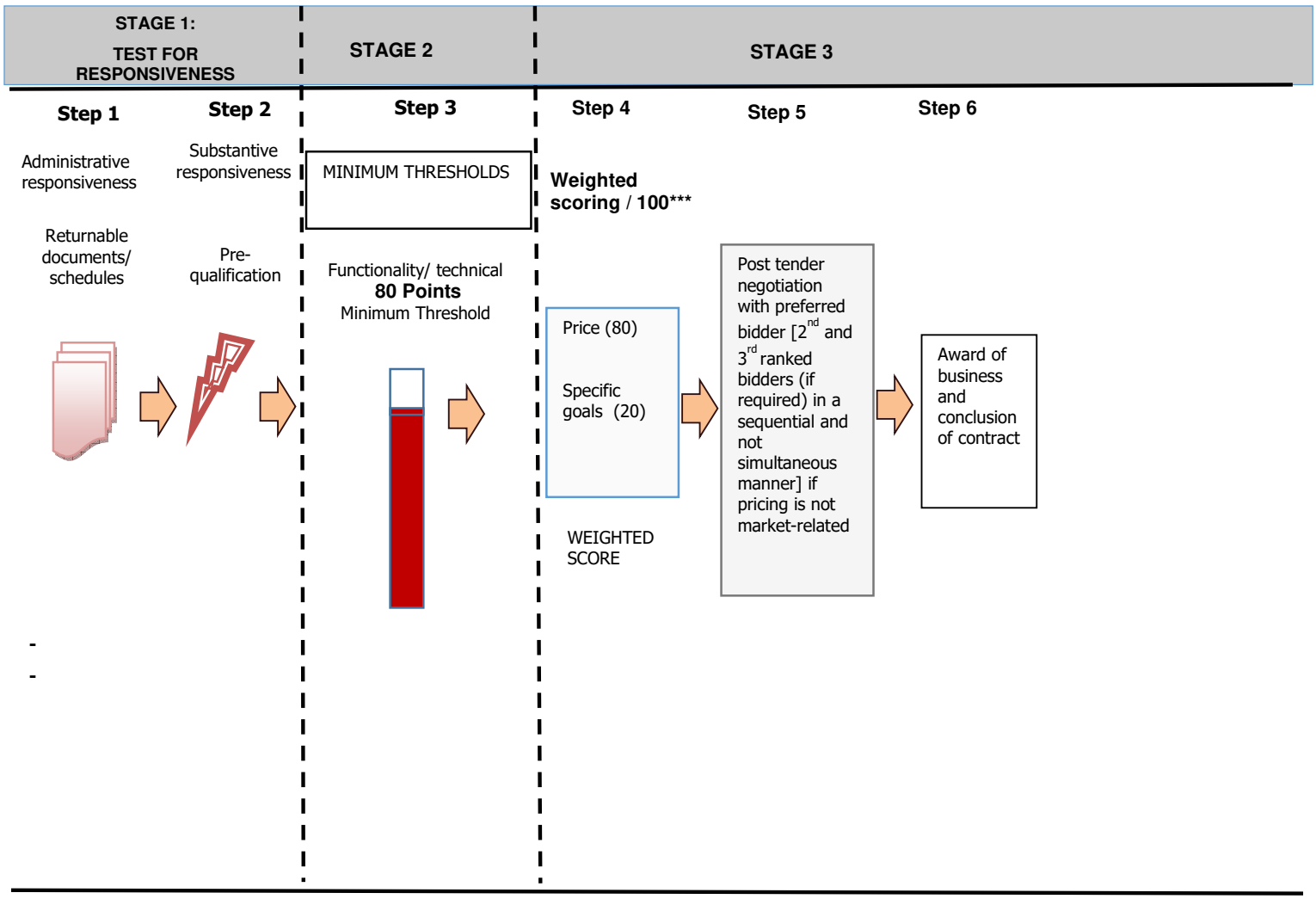


## 1.1 STEP ONE: Test for Administrative Responsiveness

The test for administrative responsiveness will include the following:

| Administrative responsiveness check | RFQ Reference |
|---|---|
| • Whether the Bid has been lodged on time | |
| • Whether all Returnable Documents and/or schedules [where applicable] were completed and returned by the closing date and time | *Section 3* |
| • Verify the validity of all returnable documents | *Section 3* |
| • Verify if the Bid document has been duly signed by the authorised respondent | *All sections* |

***The test for administrative responsiveness [Step One] must be passed for a Respondent's Proposal to progress to Step Two for further pre-qualification***

**1.2 STEP TWO: Test for Substantive Responsiveness to RFQ**

The test for substantive responsiveness to this RFQ will include the following:

| Check for substantive responsiveness | RFQ Reference |
|---|---|
| • Whether any general and legislation qualification criteria set by Transnet, have been met | *All sections* |
| • Whether the Bid contains a priced offer | *Section 4 - Quotation Form* |
| • Whether the Bid materially complies with the scope and/or specification given | *All Sections* |
| • Whether any Technical Pre-qualification Criteria/minimum requirements/legal requirements have been met as follows:<br>N/A | *Section 2 – paragraph 10 (Scope of Work)*<br>***Annexure B - Technical Criteria*** |

***The test for substantive responsiveness [Step Two] must be passed for a Respondent's proposal to progress to Step Three for further evaluation***

**1.3 STEP THREE: Minimum Threshold 80 points for Technical Criteria**

The test for the Technical and Functional threshold will include the following:

**PLEASE REFER TO ANNEXURE B – TECHNICAL CRITERIA**

| Technical Evaluation Criteria | Points Weightings | Scoring guideline |
|---|---|---|
| Company's Track Record<br>Submit Proof of purchase orders (POs) for - Pneumatic Woodchips Ship loader extendable telescopic pipe of above R800K in the past three years. | **100** | • 3 or above proof of purchase orders submitted – 100 Points.<br>• 2 proof of purchase orders submitted – 80 Points.<br>• 1 proof of purchase orders submitted – 60 Points<br>• 0 proof of purchase orders submitted – 0 Points |

| | |
|---|---|
| **Total Weighting:** | **100** |
| **Minimum qualifying score required:** | **80** |

A Respondent's compliance with the minimum functionality/technical threshold will be measured by their responses. Respondents are to note that Transnet will round off final technical scores to the nearest 2 (two) decimal places for the purposes of determining whether the technical threshold has been met.

***The minimum threshold for technical/functionality [Step Three] must be met or exceeded for a Respondent's Proposal to progress to Step Four for final evaluation***

### 1.4 STEP FOUR: Evaluation and Final Weighted Scoring

a) **Price Criteria** [Weighted score 80 points]:

| Evaluation Criteria | RFP Reference |
|---|---|
| • Commercial offer | *Section 4* |

Transnet will utilise the following formula in its evaluation of Price:

$$PS = 80\left(1 - \frac{Pt - Pmin}{Pmin}\right)$$

Where:

*Ps* = Score for the Bid under consideration

*Pt* = Price of Bid under consideration

*Pmin* = Price of lowest acceptable Bid

b) **Specific Goals** [Weighted score 20 point]

- Specific goals preference points claim form
- Preference points will be awarded to a bidder for attaining the specific goals requirements in accordance with the table indicated in Section 4.1 of the specific goals Claim Form.

### 1.5 STEP FIVE: Post Tender Negotiations

- Respondents are to note that Transnet may not award a contract if the price offered is not market related. In this regard, Transnet reserves the right to engage in PTN with the view to achieving a market-related price or to cancel the tender. Negotiations will be done in a sequential manner i.e.:
  - first negotiate with the highest ranked bidder or cancel the bid, should such negotiations fail,
  - negotiate with the 2nd and 3rd ranked bidders (if required) in a sequential manner.
- In the event of any Respondent being notified of such short-listed/preferred bidder status, his/her bid, as well as any subsequent negotiated best and final offers (BAFO), will automatically be deemed to remain valid during the negotiation period and until the ultimate award of business.

- Should Transnet conduct post tender negotiations, Respondents will be requested to provide their best and final offers to Transnet based on such negotiations. Where a market related price has been achieved through negotiation, the contract will be awarded to the successful Respondent(s).

### 1.6 STEP SIX: Award of business and conclusion of contract

- Immediately after approval to award the contract has been received, the successful or preferred bidder(s) will be informed of the acceptance of his/their Quotation by way of a Letter of Award. Thereafter the final contract will be concluded with the successful Respondent(s).
- Otherwise, a final contract will be concluded and entered into with the successful Bidder at the acceptance of a letter of award by the Respondent.

## 2 Validity Period

Transnet requires a validity period of 180 [One hundred and Eighty] Business Days from the closing date of this RFQ, excluding the first day and including the last day.

Bidders are to note that they may be requested to extend the validity period of their bid, on the same terms and conditions, if the internal evaluation process has not been finalised within the validity period. However, once the adjudication body has approved the process and award of the business to the successful bidder(s), the validity of the successful bidder(s)' bid will be deemed to remain valid until a final contract has been concluded.

## 3 Disclosure of contract information

**Johannesburg Stock Exchange Debt Listing Requirements**

Transnet may also be required to disclose information relating to the subsequent contract i.e. the name of the company, goods/services provided by the company, the value and duration of the contract, etc. in compliance with the Johannesburg Stock Exchange (JSE) Debt Listing Requirements.

**Domestic Prominent Influential Persons (DPIP) OR Foreign Prominent Public Officials (FPPO)**

Transnet is free to procure the services of any person within or outside the Republic of South Africa in accordance with applicable legislation. Transnet shall not conduct or conclude business transactions, with any Respondents without having:

- Considered relevant governance protocols;
- Determined the DPIP or FPPO status of that counterparty; and
- Conducted a risk assessment and due diligence to assess the potential risks that may be posed by the business relationship.

As per the Transnet Domestic Prominent Influential Persons (DPIP) and Foreign Prominent Public Officials (FPPO) and Related Individuals Policy available on Transnet website https://www.transnet.net/search/pages/results.aspx?k=FPIDP#k=DPIP, Respondents are required to disclose any commercial relationship with a DPIP or FPPO (as defined in the Policy) by completing the following section:

| The below form contains personal information as defined in the Protection of Personal Information Act, |
|---|

| 2013 (the "Act"). By completing the form, the signatory consents to the processing of her/his personal information in accordance with the requirements of the Act. Consent cannot unreasonably be withheld. | | | | | |
|---|---|---|---|---|---|
| **Is the Respondent** *(Complete with a "Yes" or "No")* | | | | | |
| **A DPIP/FPPO** | | **Closely Related to a DPIP/FPPO** | | **Closely Associated to a DPIP/FPPO** | |

| **List all known business interests, in which a DPIP/FPPO may have a direct/indirect interest or significant participation or involvement.** | | | | | | |
|---|---|---|---|---|---|---|
| **No** | **Name of Entity / Business** | **Role in the Entity / Business** (Nature of interest/ Participation) | **Shareholding %** | **Registration Number** | **Status** (Mark the applicable option with an X) | |
| | | | | | **Active** | **Non-Active** |
| 1 | | | | | | |
| 2 | | | | | | |
| 3 | | | | | | |

Respondents declaring a commercial relationship with a DPIP or FPPO are to note that Transnet is required to annually publish on its website a list of all business contracts entered into with DPIP or FPPO. This list will include successful Respondents, if applicable.

## 4 Returnable Documents

**Returnable Documents** means all the documents, Sections and Annexures, as listed in the tables below. There are three types of returnable documents as indicated below and Respondents are urged to ensure that these documents are returned with their bids based on the consequences of non-submission as indicated below:

| | |
|---|---|
| Mandatory Returnable Documents | ***Failure to provide all these Mandatory Returnable Documents at the Closing Date and time of this RFQ will result in a Respondent's disqualification.*** |
| Returnable Documents Used for Scoring | ***Failure to provide all Returnable Documents used for purposes of scoring a bid, by the closing date and time of this bid will not result in a Respondent's disqualification. However, Bidders will receive an automatic score of zero for the applicable evaluation criterion.*** |
| Essential Returnable Documents | ***Failure to provide essential Returnable Documents will result in Transnet affording Respondents a further opportunity to submit by a set deadline. Should a Respondent thereafter fail to submit the requested documents, this may result in a Respondent's disqualification.*** |

**All Returnable Sections, as indicated in the header and footer of the relevant pages, must be signed, stamped and dated by the Respondent.**

**a) Mandatory Returnable Documents**

Respondents are required to submit with their bid submissions the following **Mandatory Returnable Documents,** and also to confirm submission of these documents by so indicating [Yes or No] in the tables below:

| Mandatory Returnable Documents | Submitted [Yes or No] |
|---|---|
| SECTION 4: Quotation Form | |

**b) Returnable Documents Used for Scoring**

In addition to the requirements of section (a) above, Respondents are further required to submit with their Proposals the following **Returnable Documents Used for Scoring** and also to confirm submission of these documents by so indicating [Yes or No] in the table below:

| RETURNABLE DOCUMENTS USED FOR SCORING | SUBMITTED [Yes or No] |
|---|---|
| Valid proof of Respondent's compliance to B-BBEE requirements stipulated in Section 7 of this RFQ (Valid B-BBEE certificate or Sworn- Affidavit as per DTIC guidelines) | |
| ANNEXURE A: Technical Evaluation | |
| Respondent's valid proof of evidence to claim points for compliance with Specific Goals' requirements as stipulated in Section 7 of this RFQ | |
| Provide previous PO's of the similar work done, | |

**c) Essential Returnable Documents:**

Over and the above the requirements of section (a) and (b) mentioned above, Respondents are further required to submit with their Proposals the following **Essential Returnable Documents** and also to confirm submission of these documents by so indicating [Yes or No] in the table below:

| ESSENTIAL RETURNABLE DOCUMENTS & SCHEDULES | SUBMITTED [Yes or No] |
|---|---|
| SECTION 1: SBD 1 Form | |
| SECTION 5: Certificate of Acquaintance with RFQ Documents | |
| SECTION 6: RFQ Declaration and Breach of Law Form | |
| SECTION 7: SPECIFIC GOALS POINTS CLAIM FORM | |
| SECTION 9: Protection of Personal Information | |

## 5 CONTINUED VALIDITY OF RETURNABLE DOCUMENTS

The successful Respondent will be required to ensure the validity of all returnable documents, including but not limited to its valid proof of B-BBEE status, for the duration of any contract emanating from this RFQ. Should the Respondent be awarded the contract [**the Agreement]** and fail to present Transnet with such renewals as and when they become due, Transnet shall be entitled, in addition to any other rights and remedies that it may have in terms of the eventual Agreement, to terminate such Agreement immediately without any liability and without prejudice to any claims which Transnet may have for damages against the Respondent.

## SECTION 4
## QUOTATION FORM

I/We_____

hereby offer to supply the goods/services at the prices quoted in the Price Schedule below, in accordance with the conditions related thereto.

I/We agree to be bound by those terms and conditions in:

- the Standard RFQ Terms and Conditions for the Supply of Goods or Services to Transnet; and
- any other standard or special conditions embodied in this Request for Quotation.

I/We accept that unless Transnet should otherwise decide and so inform me/us, this Quotation [and, if any, its covering letter and any subsequent exchange of correspondence], together with Transnet's acceptance thereof shall constitute a binding contract between Transnet and me/us. I/We further agree that if, after I/we have been notified of the acceptance of my/our Quotation, I/we fail to deliver the said goods/service/s within the delivery lead-time quoted, Transnet may, without prejudice to any other legal remedy which it may have, cancel the order and recover from me/us any expenses incurred by Transnet in calling for Quotations afresh and/or having to accept any less favourable offer.

### Price Schedule

I/We quote as follows for the goods/services required, on a "delivered nominated destination" basis, including VAT:

| Item No | Description of Item | Unit | Quantity | Rate | TOTAL PRICE OF ITEM [ZAR] |
|---|---|---|---|---|---|
| 1 | **PIPE METAL;TELESCOPE;UNKNOWN,ELMEC PIPE, METALLIC; TYPE: TELESCOPE; P/N: UNKNOWN, ELMEC; DRAWING NO: D99-3406, 0; D99-3300, 0; D99-3400, 0; INNER AND OUTER COMPLETE; MACHINE** | **EA** | **1** | | |
| | | | | | |
| | | | | | |
| | | | | **TOTAL PRICE, exclusive of VAT:** | |
| | | | | **VAT 15% (if applicable)** | |
| | | | | **Total Inclusive of VAT (where applicable)** | |

*Respondents are to note that Transnet will round off final pricing scores to the nearest 2 (two) decimal places.*

**Notes to Pricing:**

a) Respondents are to note that if the price offered by the highest scoring bidder is not market-related, Transnet may not award the contract to that Respondent. Transnet may-

   (i) negotiate a market-related price with the Respondent scoring the highest points or cancel the RFQ;

   (ii) if that Respondent does not agree to a market-related price, negotiate a market-related price with the Respondent scoring the second highest points or cancel the RFQ;

   (iii) if the Respondent scoring the second highest points does not agree to a market-related price, negotiate a market-related price with the Respondent scoring the third highest points or cancel the RFQ.

   If a market-related price is not agreed with the Respondent scoring the third highest points, Transnet must cancel the RFQ.

b) All Prices must be quoted in South African Rand, inclusive of VAT

c) Any disbursement not specifically priced for will not be considered/accepted by Transnet.

d) To facilitate like-for-like comparison bidders must submit pricing strictly in accordance with this price schedule and not utilise a different format. Deviation from this pricing schedule could result in a bid being disqualified.

e) Please note that should you have offered a discounted price(s), Transnet will only consider such price discount(s) in the final evaluation stage if offered on an unconditional basis.

## SECTION 5
## CERTIFICATE OF ACQUAINTANCE WITH RFQ DOCUMENTS

**By signing this certificate, the Respondent is deemed to acknowledge that he/she has made himself/herself thoroughly familiar with, and agrees with all the conditions governing this RFQ. This includes those terms and conditions contained in any printed form stated to form part hereof, including but not limited to the documents stated below. As such, Transnet will recognise no claim for relief based on an allegation that the Respondent overlooked any such term or condition or failed properly to take it into account in calculating tendered prices or any other purpose:**

| | |
|---|---|
| 1. | Transnet's General Bid Conditions |
| 2. | Standard RFQ Terms and Conditions for the supply of Goods or Services to Transnet |
| 3. | Transnet's Supplier Integrity Pact |
| 4. | Non-disclosure Agreement |

**Note:** Should a Respondent be successful and awarded the bid, they will be required to complete a Supplier Declaration Form for registration as a vendor onto the Transnet vendor master database.

Should the Bidder find any terms or conditions stipulated in any of the relevant documents quoted in the RFQ unacceptable, it should indicate which conditions are unacceptable and offer alternatives by written submission on its company letterhead, attached to its submitted Bid. Any such submission shall be subject to review by Transnet's Legal Counsel who shall determine whether the proposed alternative(s) are acceptable or otherwise, as the case may be. A material deviation from the Standard terms or conditions could result in disqualification.

Bidders accept that an obligation rests on them to clarify any uncertainties regarding any bid to which they intend to respond, before submitting the bid. The Bidder agrees that he/she will have no claim or cause of action based on an allegation that any aspect of this RFQ was unclear but in respect of which he/she failed to obtain clarity.

The bidder understands that his/her Bid will be disqualified if this Certificate of Acquaintance with RFQ documents included in the RFQ as a returnable document, is found not to be true and/ or complete in every respect.

SIGNED at _____ on this _____ day of _____ 20___

| SIGNATURE OF WITNESSES | ADDRESS OF WITNESSES |
|---|---|
| 1 _____ | _____ |
| Name _____ | _____ |
| 2 _____ | _____ |
| Name _____ | _____ |

SIGNATURE OF RESPONDENT'S AUTHORISED REPRESENTATIVE: _____

_____ _____
Respondent's Signature Date & Company Stamp

NAME: _____

DESIGNATION: _____

## SECTION 6

## RFQ DECLARATION AND BREACH OF LAW FORM

NAME OF ENTITY: _____

We _____ do hereby certify that:

1. Transnet has supplied and we have received appropriate responses to any/all questions [as applicable] which were submitted by ourselves for RFQ Clarification purposes;
2. We have received all information we deemed necessary for the completion of this Request for Quotation [**RFQ**];
3. We have been provided with sufficient access to the existing Transnet facilities/sites and all relevant information relevant to the Supply of the Goods as well as Transnet information and Employees, and have had sufficient time in which to conduct and perform a thorough due diligence of Transnet's operations and business requirements and assets used by Transnet. Transnet will therefore not consider or permit any pre- or post-contract verification or any related adjustment to pricing, service levels or any other provisions/conditions based on any incorrect assumptions made by the Respondent in arriving at his Bid Price.
4. At no stage have we received additional information relating to the subject matter of this RFQ from Transnet sources, other than information formally received from the designated Transnet contact(s) as nominated in the RFQ documents;
5. We have complied with all obligations of the Bidder/Supplier as indicated in the Transnet Supplier Integrity Pact which includes but are not limited to ensuring that we take all measures necessary to prevent corrupt practices, unfairness and illegal activities in order to secure or in furtherance to secure a contract with Transnet;
6. We are satisfied, insofar as our entity is concerned, that the processes and procedures adopted by Transnet in issuing this RFQ and the requirements requested from Bidders in responding to this RFQ have been conducted in a fair and transparent manner;
7. We declare that a family, business and/or social relationship **exists / does not exist** [delete as applicable] between an owner / member / director / partner / shareholder of our entity and an employee or board member of Transnet including any person who may be involved in the evaluation and/or adjudication of this Bid;
8. We declare that an owner / member / director / partner / shareholder of our entity **is / is not** [delete as applicable] an employee or board member of the Transnet;
9. In addition, we declare that an owner / member / director / partner / shareholder/employee of our entity **has / has not been** [delete as applicable] a former employee or board member of Transnet in the past 10 years. I further declare that if they were a former employee or board member of Transnet in the past 10 years that they **were/were not** involved in the bid preparation or had access to the information related to this RFQ; and
10. If such a relationship as indicated in paragraph 7, 8 and/or 9 exists, the Respondent is to complete the following section:

FULL NAME OF OWNER/MEMBER/DIRECTOR/
PARTNER/SHAREHOLDER/EMPLOYEE: ADDRESS:

_____

_____

Indicate nature of relationship with Transnet:

_____

_____

***[Failure to furnish complete and accurate information in this regard will lead to the disqualification of a response and may preclude a Respondent from doing future business with Transnet]. Information provided in the declarations may be used by Transnet and/or its affiliates to verify the correctness of the information provided.***

11. We declare, to the extent that we are aware or become aware of any relationship between ourselves and Transnet [other than any existing and appropriate business relationship with Transnet] which could unfairly advantage our entity in the forthcoming adjudication process, we shall notify Transnet immediately in writing of such circumstances.

**BIDDER'S DISCLOSURE (SBD4)**

**12 PURPOSE OF THE FORM**

12.1 Any person (natural or juristic) may make an offer or offers in terms of this invitation to bid. In line with the principles of transparency, accountability, impartiality, and ethics as enshrined in the Constitution of the Republic of South Africa and further expressed in various pieces of legislation, it is required for the bidder to make this declaration in respect of the details required hereunder.

12.2 Where a person/s are listed in the Register for Tender Defaulters and / or the List of Restricted Suppliers, that person will automatically be disqualified from the bid process.

**13 Bidder's declaration**

13.1 Is the bidder, or any of its directors / trustees / shareholders / members / partners or any person having a controlling interest[1] in the enterprise, employed by the state? **YES/NO**

13.1.1. If so, furnish particulars of the names, individual identity numbers, and, if applicable, state employee numbers of sole proprietor/ directors / trustees / shareholders / members/ partners or any person having a controlling interest in the enterprise, in table below.

[1] the power, by one person or a group of persons holding the majority of the equity of an enterprise, alternatively, the person/s having the deciding vote or power to influence or to direct the course and decisions of the enterprise.

| Full Name | Identity Number | Name of State institution |
|---|---|---|
| | | |
| | | |
| | | |
| | | |
| | | |
| | | |
| | | |
| | | |
| | | |

13.2 Do you, or any person connected with the bidder, have a relationship with any person who is employed by the procuring institution? **YES/NO**

13.2.1. If so, furnish particulars:

…….

…….

13.3 Does the bidder or any of its directors / trustees / shareholders / members / partners or any person having a controlling interest in the enterprise have any interest in any other related enterprise whether or not they are bidding for this contract? **YES/NO**

13.3.1. If so, furnish particulars:

…….

…….

## 14 DECLARATION

I, the undersigned, (name)……. in submitting the accompanying bid, do hereby make the following statements that I certify to be true and complete in every respect:

14.1 I have read and I understand the contents of this disclosure;

14.2 I understand that the accompanying bid will be disqualified if this disclosure is found not to be true and complete in every respect;

14.3 The bidder has arrived at the accompanying bid independently from, and without consultation, communication, agreement or arrangement with any competitor. However, communication between partners in a joint venture or consortium[2] will not be construed as collusive bidding.

[2] Joint venture or Consortium means an association of persons for the purpose of combining their expertise, property, capital, efforts, skill and knowledge in an activity for the execution of a contract.

14.4 In addition, there have been no consultations, communications, agreements or arrangements with any competitor regarding the quality, quantity, specifications, prices, including methods, factors or formulas used to calculate prices, market allocation, the intention or decision to submit or not to submit the bid, bidding with the intention not to win the bid and conditions or delivery particulars of the products or services to which this bid invitation relates.

14.5 The terms of the accompanying bid have not been, and will not be, disclosed by the bidder, directly or indirectly, to any competitor, prior to the date and time of the official bid opening or of the awarding of the contract.

14.6 There have been no consultations, communications, agreements or arrangements made by the bidder with any official of the procuring institution in relation to this procurement process prior to and during the bidding process except to provide clarification on the bid submitted where so required by the institution; and the bidder was not involved in the drafting of the specifications or terms of reference for this bid.

14.7 I am aware that, in addition and without prejudice to any other remedy provided to combat any restrictive practices related to bids and contracts, bids that are suspicious will be reported to the Competition Commission for investigation and possible imposition of administrative penalties in terms of section 59 of the Competition Act No 89 of 1998 and or may be reported to the National Prosecuting Authority (NPA) for criminal investigation and or may be restricted from conducting business with the public sector for a period not exceeding ten (10) years in terms of the Prevention and Combating of Corrupt Activities Act No 12 of 2004 or any other applicable legislation.

I CERTIFY THAT THE INFORMATION FURNISHED IN PARAGRAPHS 12, 13 and 14 ABOVE IS CORRECT.

I ACCEPT THAT THE STATE MAY REJECT THE BID OR ACT AGAINST ME IN TERMS OF PARAGRAPH 6 OF PFMA SCM INSTRUCTION 03 OF 2021/22 ON PREVENTING AND COMBATING ABUSE IN THE SUPPLY CHAIN MANAGEMENT SYSTEM SHOULD THIS DECLARATION PROVE TO BE FALSE.

**BREACH OF LAW**

12. We further hereby certify that *I/we* ***have/have not been*** [delete as applicable] found guilty during the preceding 5 [five] years of a serious breach of law, including but not limited to a breach of the Competition Act, 89 of 1998, by a court of law, tribunal or other administrative body. The type of breach that the Respondent is required to disclose excludes relatively minor offences or misdemeanours, e.g. traffic offences. This includes the imposition of an administrative fine or penalty.

    Where found guilty of such a serious breach, please disclose:

    NATURE OF BREACH:

    _____

    DATE OF BREACH: _____

    Furthermore, I/we acknowledge that Transnet SOC Ltd reserves the right to exclude any Respondent from the bidding process, should that person or entity have been found guilty of a serious breach of law, tribunal or regulatory obligation.

SIGNED at _____ on this _____ day of _____ 20___

| | |
|---|---|
| For and on behalf of<br>_____<br>duly authorised hereto | AS WITNESS: |
| Name: | Name: |
| Position: | Position: |
| Signature: | Signature: |
| Date: | Registration No of Company/CC<br>_____ |
| Place: | Registration Name of Company/CC<br>_____ |

## SECTION 7: SPECIFIC GOALS POINTS CLAIM FORM

This preference form must form part of all bids invited. It contains general information and serves as a claim for preference points for specific goals Contribution. Transnet will award preference points to companies who provide valid proof of evidence of as per the table below.

**NB: BEFORE COMPLETING THIS FORM, BIDDERS MUST STUDY THE GENERAL CONDITIONS, DEFINITIONS AND DIRECTIVES APPLICABLE IN RESPECT OF SPECIFIC GOALS, AS PRESCRIBED IN THE PREFERENTIAL PROCUREMENT POLICY FRAMEWORK ACT, 2000.**

---

**1. GENERAL CONDITIONS**

1.1 The following preference point systems are applicable to all bids:

- the 80/20 system for requirements with a Rand value of up to R50 000 000 (all applicable taxes included); and

1.2 The value of this bid is estimated to not exceed R50 000 000 (all applicable taxes included) and therefore the 80/20 preference point system shall be applicable. Despite the stipulated preference point system, Transnet shall use the lowest acceptable bid to determine the applicable preference point system in a situation where all received acceptable bids are received outside the stated preference point system.

1.3 Either the 80/20 preference point system will be applicable to this tender.

1.4 Preference points for this bid shall be awarded for:

(a) Price;

(b) B-BBEE Status Level of Contribution.

(c) Any other specific goal determined in Transnet preferential procurement policy.

1.5 The maximum points for this bid are allocated as follows:

| | POINTS |
|---|---|
| **PRICE** | **80** |
| **B-BBEE STATUS LEVEL OF CONTRIBUTOR**<br>**(B-BBEE Level of contributor – level 1-2 Black Youth Owned entities (50%)** | **20** |
| **Total points for Price and Specific Goals must not exceed** | **100** |

1.6 Failure on the part of a bidder to submit proof of specific goals together with the bid will be interpreted to mean that preference points for B-BBEE status level of contribution are not claimed.

1.7 The purchaser reserves the right to require of a bidder, either before a bid is adjudicated or at any time

subsequently, to substantiate any claim in regard to preferences, in any manner required by the purchaser.

## 2. DEFINITIONS

(a) **"all applicable taxes"** includes value-added tax, pay as you earn, income tax, unemployment insurance fund contributions and skills development levies;

(b) **"B-BBEE"** means broad-based black economic empowerment as defined in section 1 of the Broad-Based Black Economic Empowerment Act;

(c) "**B-BBEE status level of contributor"** means the B-BBEE status received by a measured entity based on its overall performance using the relevant scorecard contained in the Codes of Good Practice on Black Economic Empowerment, issued in terms of section 9(1) of the Broad-Based Black Economic Empowerment Act;

(d) **"bid"** means a written offer in a prescribed or stipulated form in response to an invitation by an organ of state for the supply/provision of services, works or goods, through price quotations, advertised competitive bidding processes or proposals;

(e) **"Broad-Based Black Economic Empowerment Act"** means the Broad-Based Black Economic Empowerment Act, 2003 (Act No. 53 of 2003);

(f) **"EME"** means an Exempted Micro Enterprise as defines by Codes of Good Practice under section 9 (1) of the Broad-Based Black Economic Empowerment Act, 2003 (Act No. 53 of 2003);

(g) **"functionality"** means the ability of a bidder to provide goods or services in accordance with specification as set out in the bid documents;

(h) **"Price"** includes all applicable taxes less all unconditional discounts.

(i) **"Proof of B-BBEE Status Level of Contributor"** means:

1) B-BBBEE status level certificate issued by an unauthorised body or person;

2) A sworn affidavit as prescribed by the B-BBEE Codes of Good Practice;

3) Any other requirement prescribed in terms of the B-BBEE Act.

(j) **"QSE"** means a Qualifying Small Enterprise in terms of a Codes of Good Practice under section 9 (1) of the Broad-Based Black Economic Empowerment Act, 2003 ( Act No. 53 of 2003);

(k) **"rand value"** means the total estimated value of a contract in South African currency, calculated at the time of bid invitations, and includes all applicable taxes and excise duties.

(l) **"Specific goals"** means targeted advancement areas or categories of persons or groups either previously disadvantaged or falling within the scope of the Reconstruction and Development Programme identified by Transnet to be given preference in allocation of procurement contracts in line with section 2(1) of the PPPFA.

## 3. POINTS AWARDED FOR PRICE

### 3.1 THE 80/20 PREFERENCE POINT SYSTEMS

A maximum of 80 points is allocated for price on the following basis:

**80/20**

$$Ps = 80\left(1 - \frac{Pt - P\min}{P\min}\right)$$

Where

Ps = Points scored for comparative price of bid under consideration

Pt = Comparative price of bid under consideration

Pmin = Comparative price of lowest acceptable bid

In terms of Transnet Preferential Procurement Policy (TPPP) and Procurement Manuals, the following preference points must be awarded to a bidder who provides the relevant required evidence for claiming points.

For below R500 000.00

| Selected Specific Goal | Number of points allocated (80/20) |
|---|---|
| | Prices Below R500 000 |
| B-BBEE Level of contributor – Level 1 | 15 |
| B-BBEE Level of contributor - Level 2 | 10 |
| 51% Black Youth Owned Entities | 5 |
| Non-Compliant and/or B-BBEE Level 3-8 contributors | 0 |

For above R500 000.00

| Selected Specific Goal | Number of points allocated (80/20) |
|---|---|
| | Prices Below R500 000 |
| B-BBEE Level of contributor – Level 1 or 2 | 10 |
| 51% Black Youth Owned Entities | 10 |
| Non-Compliant and/or B-BBEE Level 3-8 contributors | 0 |

## 4. EVIDENCE REQUIRED FOR CLAIMING SPECIFIC GOALS

4.1 In terms of Transnet Preferential Procurement Policy (TPPP) and Procurement Manuals, preference points must be awarded to a bidder for providing evidence in accordance with the table below:

| Specific Goals | Acceptable Evidence |
|---|---|
| B-BBEE | B-BBEE Certificate / Sworn- Affidavit / B-BBEE CIPC Certificate (in case of JV, a consolidated scorecard will be accepted) as per DTIC guideline |
| +50% Black Youth Owned Entities | Certified copy of ID Documents of the Owners and B-BBEE Certificate / Sworn- Affidavit / B-BBEE CIPC Certificate (in case of JV, a consolidated scorecard will be accepted) as per DTIC guideline |

4.2 The table below indicates the required proof of B-BBEE status depending on the category of enterprises:

| Enterprise | B-BBEE Certificate & Sworn Affidavit |
|---|---|
| **Large** | Certificate issued by SANAS accredited verification agency |
| **QSE** | Certificate issued by SANAS accredited verification agency<br>Sworn-Affidavit signed by the authorised QSE representative and attested by a Commissioner of Oaths confirming annual turnover and black ownership (only black-owned QSEs - 51% to 100% Black owned)<br>[Sworn- affidavits must substantially comply with the format that can be obtained on the DTI's website at www.dti.gov.za/economic_empowerment/bee_codes.jsp.] |
| **EME[3]** | Sworn-Affidavit signed by the authorised EME representative and attested by a Commissioner of Oaths confirming annual turnover and black ownership<br>Certificate issued by CIPC (formerly CIPRO) confirming annual turnover and black ownership<br>Certificate issued by SANAS accredited verification agency only if the EME is being measured on the QSE scorecard |

4.3 A trust, consortium or joint venture (including unincorporated consortia and joint ventures) must submit a consolidated B-BBEE Status Level verification certificate for every separate bid.

4.4 Tertiary Institutions and Public Entities will be required to submit their B-BBEE status level certificates in terms of the specialized scorecard contained in the B-BBEE Codes of Good Practice.

4.5 A person will not be awarded points for B-BBEE status level if it is indicated in the bid documents that such a bidder intends sub-contracting more than 25% of the value of the contract to any other enterprise that does not qualify for at least the points that such a bidder qualifies for, unless the intended sub-contractor is an EME that has the capability and ability to execute the sub-contract.

4.6 A person awarded a contract may not sub-contract more than 25% of the value of the contract to any other enterprise that does not have an equal or higher B-BBEE status level than the person concerned, unless the contract is sub-contracted to an EME that has the capability and ability to execute the sub-contract.

4.7 Bidders are to note that the rules pertaining to B-BBEE verification and other B-BBEE requirements may be changed from time to time by regulatory bodies such as National Treasury or the DTI. It is the Bidder's responsibility to ensure that his/her bid complies fully with all B-BBEE requirements at the time of the submission of the bid.

**5. BID DECLARATION**

5.1 Bidders who claim points in respect of B-BBEE Status Level of Contribution must complete the following:

**6. B-BBEE STATUS LEVEL OF CONTRIBUTION CLAIMED IN TERMS OF PARAGRAPHS 1.4 AND 6.1**

6.1 B-BBEE Status Level of Contribution: . = ……(maximum of 20 points)

(Points claimed in respect of paragraph 6.1 must be in accordance with the table reflected in paragraph 4.1 and must be substantiated by relevant proof of B-BBEE status level of contributor.

**7. SUB-CONTRACTING**

7.1 Will any portion of the contract be sub-contracted?

(***Tick applicable box***)

| YES | | NO | |
|---|---|---|---|

7.1.1 If yes, indicate:

i) What percentage of the contract will be subcontracted.....%
ii) The name of the sub-contractor.....
iii) The B-BBEE status level of the sub-contractor.....
iv) Whether the sub-contractor is an EME or QSE
***(Tick applicable box)***

| YES | | NO | |
|---|---|---|---|

v) Specify, by ticking the appropriate box, if subcontracting with any of the enterprises below:

| | **Designated Group: An EME or QSE which is at last 51% owned by:** | **EME √** | **QSE √** |
|---|---|---|---|
| | Black people | | |
| | Black people who are youth | | |
| | Black people who are women | | |
| | Black people with disabilities | | |
| | Black people living in rural or underdeveloped areas or townships | | |
| | Cooperative owned by black people | | |
| | Black people who are military veterans | | |
| | **OR** | | |
| | Any EME | | |
| | Any QSE | | |

8. **DECLARATION WITH REGARD TO COMPANY/FIRM**

8.1 Name of company/firm:.....

8.2 VAT registration number:.....

8.3 Company registration number:.....

8.4 **TYPE OF COMPANY/ FIRM**

Partnership/Joint Venture / Consortium
One person business/sole propriety
Close corporation
Company
(Pty) Limited
[TICK APPLICABLE BOX]

8.5 **DESCRIBE PRINCIPAL BUSINESS ACTIVITIES**

.....
.....

8.6 **COMPANY CLASSIFICATION**

Manufacturer
Supplier
Professional service provider
Other service providers, e.g. transporter, etc.
[*TICK APPLICABLE BOX*]

8.7 Total number of years the company/firm has been in business:.....

8.8 I/we, the undersigned, who is / are duly authorised to do so on behalf of the company/firm, certify that the points claimed, based on the B-BBEE status level of contribution indicated in paragraphs 4.1 and 6.1 of the foregoing certificate, qualifies the company/ firm for the preference(s) shown and I / we acknowledge that:

i) The information furnished is true and correct;

ii) The preference points claimed are in accordance with the General Conditions as indicated in paragraph 1 of this form;

iii) In the event of a contract being awarded as a result of points claimed as shown in paragraph 4.1 and 6.1, the contractor may be required to furnish documentary proof to the satisfaction of the purchaser that the claims are correct;

iv) If the B-BBEE status level of contributor has been claimed or obtained on a fraudulent basis or any of the conditions of contract have not been fulfilled, the purchaser may, in addition to any other remedy it may have-

(a) disqualify the person from the bidding process;

(b) recover costs, losses or damages it has incurred or suffered as a result of that person's conduct;

(c) cancel the contract and claim any damages which it has suffered as a result of having to make less favourable arrangements due to such cancellation;

(d) if the successful bidder subcontracted a portion of the bid to another person without disclosing it, Transnet reserves the right to penalise the bidder up to 10 percent of the value of the contract;

(e) recommend that the bidder or contractor, its shareholders and directors, or only the shareholders and directors who acted on a fraudulent basis, be restricted by the National Treasury from obtaining business from any organ of state for a period not exceeding 10 years, after the *audi alteram partem* (hear the other side) rule has been applied; and

(f) forward the matter for criminal prosecution.

| WITNESSES | …… |
|---|---|
| 1. …….. | SIGNATURE(S) OF BIDDERS(S) |
| 2. …… | DATE: …….. |
| | ADDRESS …….. |
| | …….. |

## SECTION 8

## PROTECTION OF PERSONAL INFORMATION

1. The following terms shall bear the same meaning as contemplated in Section 1 of the Protection of Person information act, No.4 of 2013.("POPIA"):

   consent; data subject; electronic communication; information officer; operator; person; personal information; processing; record; Regulator; responsible party; special information; as well as any terms derived from these terms.

2. Transnet will process all information by the Respondent in terms of the requirements contemplated in Section 4(1) of the POPIA:

   Accountability; Processing limitation; Purpose specification; Further processing limitation; Information quality; Openness; Security safeguards and Data subject participation.

3. The Parties acknowledge and agree that, in relation to personal information that will be processed pursuant to this RFQ, the Responsible party is "Transnet" and the Data subject is the "Respondent". Transnet will process personal information only with the knowledge and authorisation of the Respondent and will treat personal information which comes to its knowledge as confidential and will not disclose it, unless so required by law or subject to the exceptions contained in the POPIA.

4. Transnet reserves all the rights afforded to it by the POPIA in the processing of any of its information as contained in this RFQ and the Respondent is required to comply with all prescripts as detailed in the POPIA relating to all information concerning Transnet.
5. In responding to this bid, Transnet acknowledges that it will obtain and have access to personal information of the Respondent. Transnet agrees that it shall only process the information disclosed by Respondent in their response to this bid for the purpose of evaluating and subsequent award of business and in accordance with any applicable law.
6. Transnet further agrees that in submitting any information or documentation requested in this RFQ, the Respondent is consenting to the further processing of their personal information for the purpose of, but not limited to, risk assessment, assurances, contract award, contract management, auditing, legal opinions/litigations, investigations (if applicable), document storage for the legislatively required period, destruction, de-identification and publishing of personal information by Transnet and/or its authorised appointed third parties.
7. Furthermore, Transnet will not otherwise modify, amend or alter any personal data submitted by the Respondent or disclose or permit the disclosure of any personal data to any third party without the prior written consent from the Respondent. Similarly, Transnet requires the Respondent to process any personal information disclosed by Transnet in the bidding process in the same manner.
8. Transnet shall, at all times, ensure compliance with any applicable laws put in place and maintain sufficient measures, policies and systems to manage and secure against all forms of risks to any information that may be shared or accessed pursuant to this RFQ (physically, through a computer or any other form of electronic communication).
9. Transnet shall notify the Respondent in writing of any unauthorised access to information, cybercrimes or suspected cybercrimes, in its knowledge and report such crimes or suspected crimes to the relevant authorities in accordance with applicable laws, after becoming aware of such crimes or suspected crime. The Respondent must take all necessary remedial steps to mitigate the extent of the loss or compromise of personal information and to restore the integrity of the affected personal information as quickly as is possible.
10. The Respondent may, in writing, request Transnet to confirm and/or make available any personal information in its possession in relation to the Respondent and if such personal information has been accessed by third parties and the identity thereof in terms of the POPIA. The Respondent may further request that Transnet correct (excluding critical/mandatory or evaluation information), delete, destroy, withdraw consent or object to the processing of any personal information relating to the Respondent in Transnet's possession in terms of the provision of the POPIA and utilizing Form 2 of the POPIA Regulations.
11. In submitting any information or documentation requested in this RFQ, the Respondent is hereby consenting to the processing of their personal information for the purpose of this RFQ and further confirming that they are aware of their rights in terms of Section 5 of POPIA

**Respondents are required to provide consent below:**

| **YES** | |
|---|---|

| **NO** | |
|---|---|

12. Further, the Respondent declares that they have obtained all consents pertaining to other data subject's personal information included in its submission and thereby indemnifying Transnet against any civil or criminal action, administrative fines or other penalty or loss that may arise as a result of the processing of any personal information that the Respondent submitted.

13. The Respondent declares that the personal information submitted for the purpose of this RFQ is complete, accurate, not misleading, is up to date and may be updated where applicable.

Signature of Respondent's authorised representative: _____

Should a Respondent have any complaints or objections to processing of its personal information, by Transnet, the Respondent can submit a complaint to the Information Regulator on https://www.justice.gov.za/inforeg/, click on contact us, click on complaints.IR@justice.gov.za

# ELMEC 1- FABRICATE AND SUPPLY TELESCOPIC PIPE

## SCOPE OF WORK

# 1. Project Overview

## 1.1 Introduction

The DRY BULK Terminal in Richards Bay is a material handling facility where bulk cargo is imported and exported through a network of conveyors and bulk materials handling appliances. To ensure continuous operation of the terminal's equipment, a project has been initiated to Fabricate and Install telescopic pipe.

## 1.2 Employer's objective

The Employer's objective for this project is that a contractor be appointed to Fabricate and Install telescopic pipe.

## The Scope

### Technical Requirements

The following are the details of the actual work to be performed.

1.2.1 A contractor is required to conduct the following to meet the requirements of this scope:

a) Fabricate Outer pipe as per drawing Number (D99 3406)
b) Fabricate Inner pipe as per drawing (D03 - 3130 – 01,02,03,04 and 05) all item 1 to 11
c) Item 4 to be hard faced with 4mm tungsten carbide spray
d) The contractor to fabricate Telescopic inner and Outer pipe
e) The contractor to notify TPT personnel before assembling both pipe for inspection
f) The contractor to notify TPT personnel after assembling both pipes to check the movement of both pipes
g) The contactor must be able to check the movement of the pipe in the workshop
h) The pipe must be sandblasted and painted in white as per TPT spec

# 2. Delivery

## 2.1 Delivery Times

The contractor is expected to commit to the delivery times for carrying out the works through a schedule/project plan with durations, which is to be submitted by the contractor as part of the proposal. These delivery times will be used to evaluate the contractor.

## 2.2 Delivery Site

The components are to be delivered at the premises of Transnet Port Terminal (TPT) at the Richards Bay Port. The delivery address is as follows: Transnet Harbour, Newark Road, Export, Richards Bay, 3900.

# 3 Required Guaranty/Liability

The Contractor is expected to provide quality work to TPT.
A twelve (12) month guaranty, minimum, on installation items covering any defects arising from poor quality parts or workmanship following delivery. Should the items fail within the specified guaranty period, the contractor will be responsible for the replacement of the items at no cost to TPT.

# 4 Documentation

All components supplied are to be supplied with all the technical drawings, manuals and the maintenance schedules (where applicable). The Contractor will be expected to submit and keep (and make available to TPT-RCB on request) warranty certificates/documentation from OEM's on the parts/components they have supplied and delivered to TPT-RCB.

# 5 Governing Codes, Standards and Specifications

The Contractor's service for TPT - RCB must be in accordance with the requirements of the latest edition of the following specifications and codes:

Note: * When no Revision of Date is furnished, the latest revision/edition will apply.

# 6 Health and Safety Requirements

The Contractor shall comply with Transnet Port Terminals Health Safety and Environmental Specification number: Operations – SHE Contractor Specification SHEQ PRO 021.

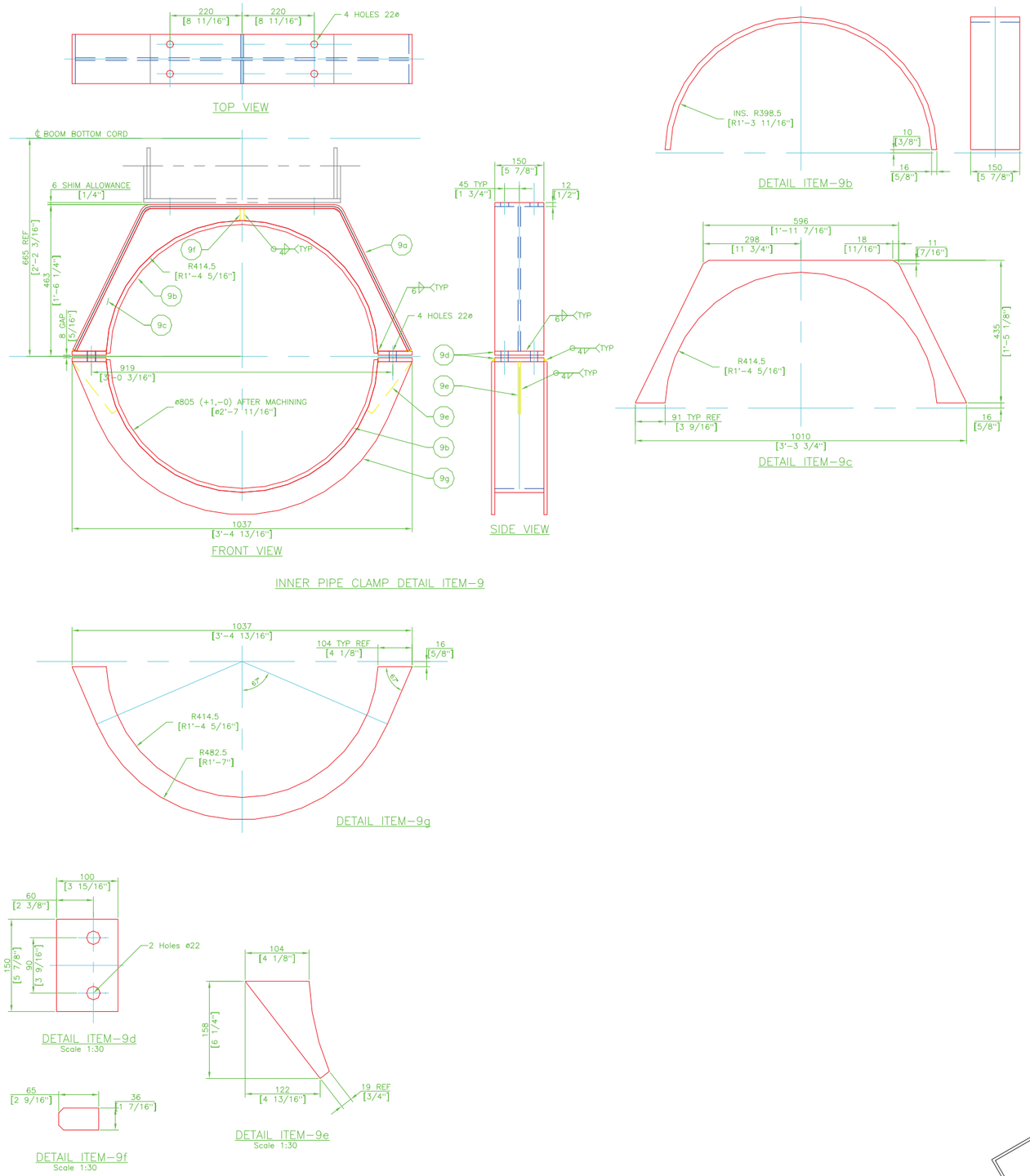


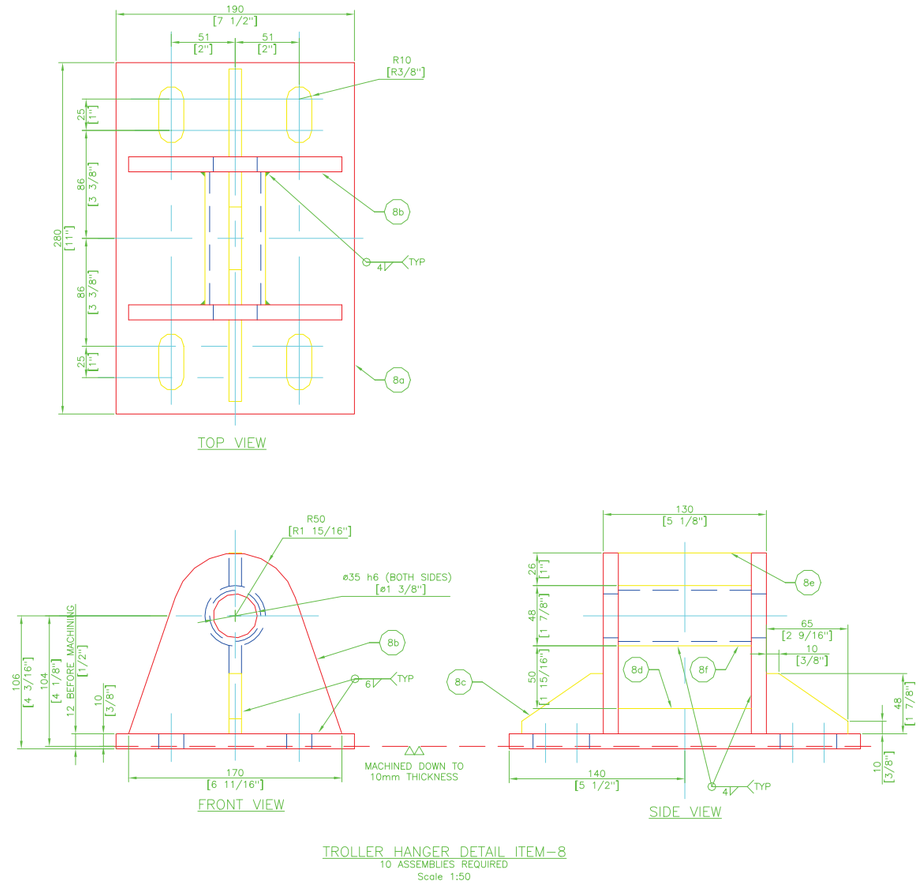


DESIGN FROZEN

S. GYABRONKA P.Eng
ELMEC ENGINEERING LIMITED
N.VANCOUVER,B.C.
SIGNATURE ON FILE

INNER PIPE CLAMP ASSEMBLY ESTIMATED FINISHED MASS (1 ASSEMBLY) = 79.5 Kg
TROLLEY HANGER ASSEMBLY ESTIMATED FINISHED MASS (10 ASSEMBLIES) = 100 Kg

| ITEM | QTY | MATERIAL | SIZE/REF | CH |
|---|---|---|---|---|
| 9g | 2 | WEB PL 467x10 | 1040 | – |
| 9f | 2 | GUSSET PL 32x10 | 65 | – |
| 9e | 2 | GUSSET PL 140x10 | 160 | – |
| 9d | 4 | FLANGE FB 100x12 | 150 | – |
| 9c | 1 | WEB PL 435x10 | 1010 | – |
| 9b | 2 | BAND FB 150x16 ROLLED/MACH. | 1275 | – |
| 9a | 1 | FLANGE FB 150x12 BENT | 1561 | – |
| 9 | 1 | INNER PIPE CLAMP ASSEMBLY | – | – |
| 8f | 10 | SPACER ø38 NB SCH 40 PIPE | 106 | – |
| 8e | 10 | GUSSET PL 26x10 | 106 | – |
| 8d | 10 | GUSSET FB 50x10 | 106 | – |
| 8c | 20 | GUSSET FB 48x10 | 65 | – |
| 8b | 20 | SIDE PL 144x12 | 170 | – |
| 8a | 10 | BASE PL 190x12 | 280 | – |
| 8 | 10 | TROLLEY HANGER ASSEMBLY | – | – |

| REVISIONS | MADE BY | DATE | REV | ISSUES | DATE | REFERENCE DWGS |
|---|---|---|---|---|---|---|
| – | – | – | – | Certified for Construction | Mar 23/04 | – |

ELMEC ENGINEERING LIMITED N.VANCOUVER,B.C.

SOUTH AFRICAN PORT OPERATIONS

CTC

PORTNET
RICHARDS BAY-DRY BULK JETTY SHIPLOADER
SHIPLOADER 2

1000 T.P.H SHIPLOADER
TELESCOPE
PIPE CLAMP & TROLLER HANGER DETAIL

HULK

DRN JCG
CHK
ENGR
JOB D-3220

DWG NO. D03-3130-03
REV –
SCALE 1:16
DATE Mar 05/03

FILE NAME: D03-3130-03
CAD# D03-3116
LEO REF. # D99-3401/02 FILE PATH: C:\Projects By Customer\Shiploader\Hulk\D03-3130 (TELESCOPE)\D03-3130-03 (PIPE CLAMP AND TROLLEY HANGER DATAIL).dwg

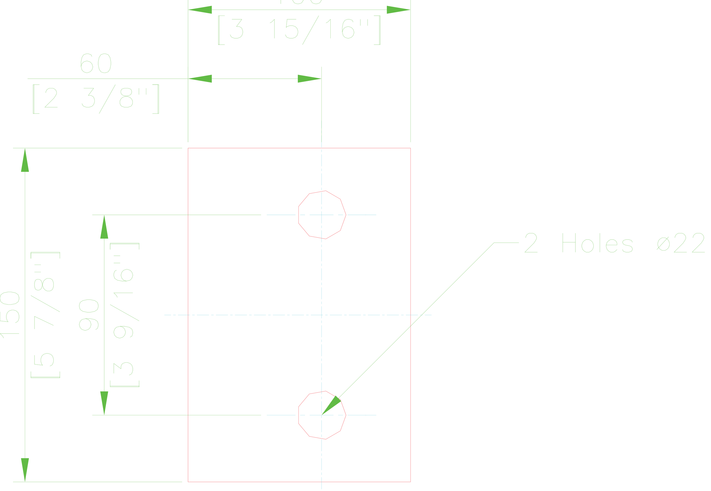


DETAIL ITEM–9d
Scale 1:30

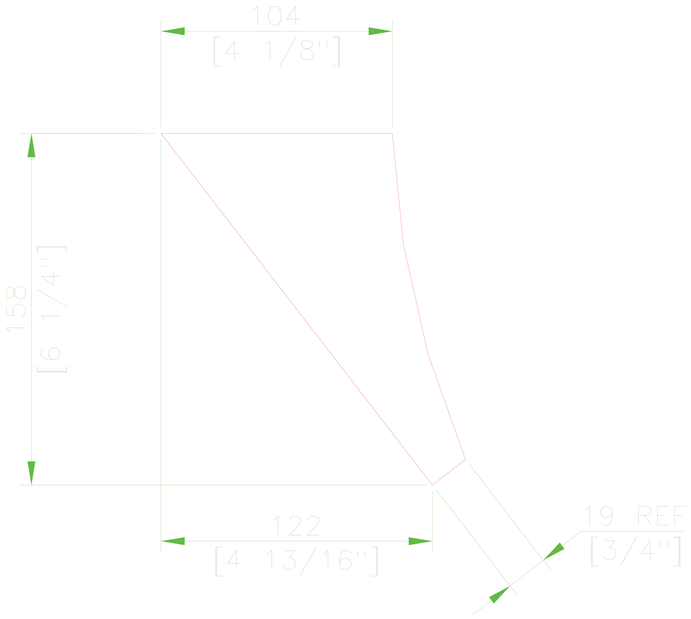


DETAIL ITEM–9e
Scale 1:30

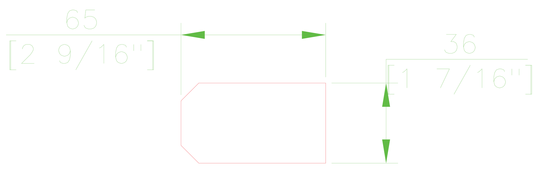


DETAIL ITEM–9f
Scale 1:30

DETAIL ITEM 3 TYP

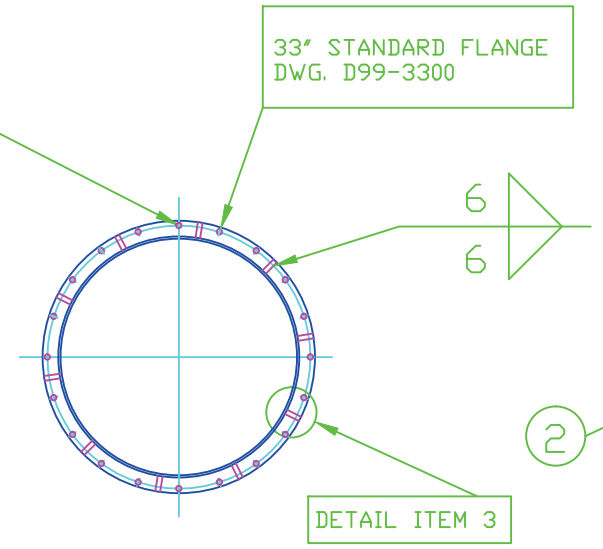


SECTION C-C

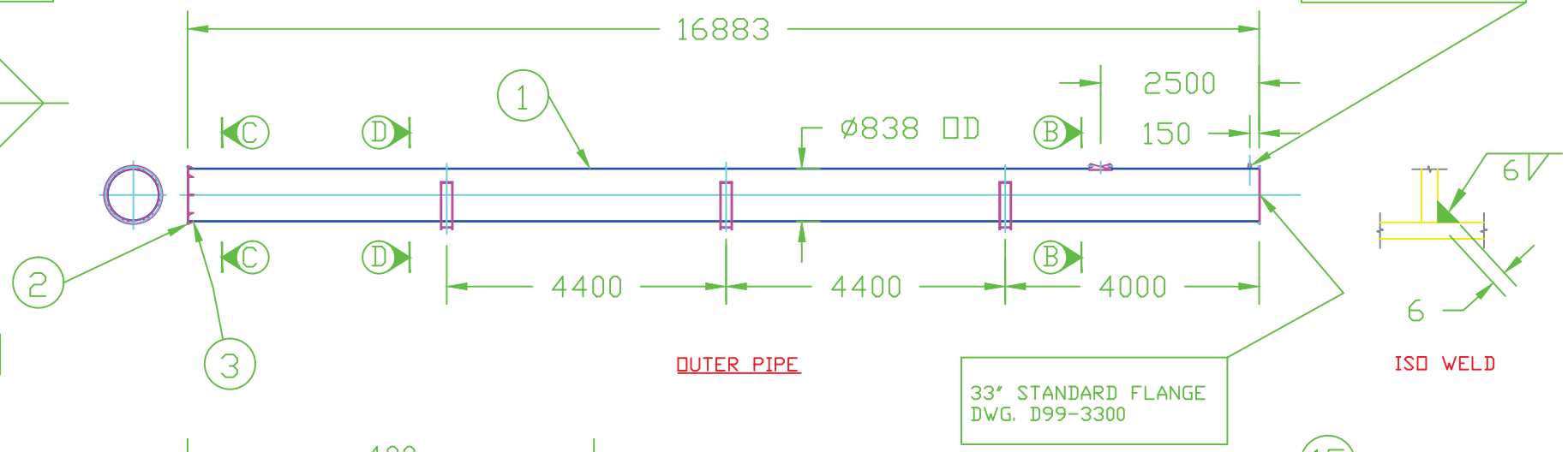


OUTER PIPE




ISO WELD

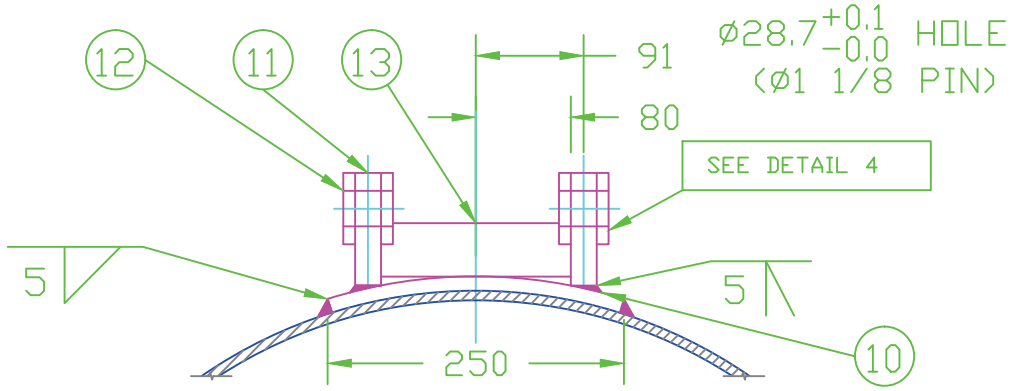


SECTION B-B

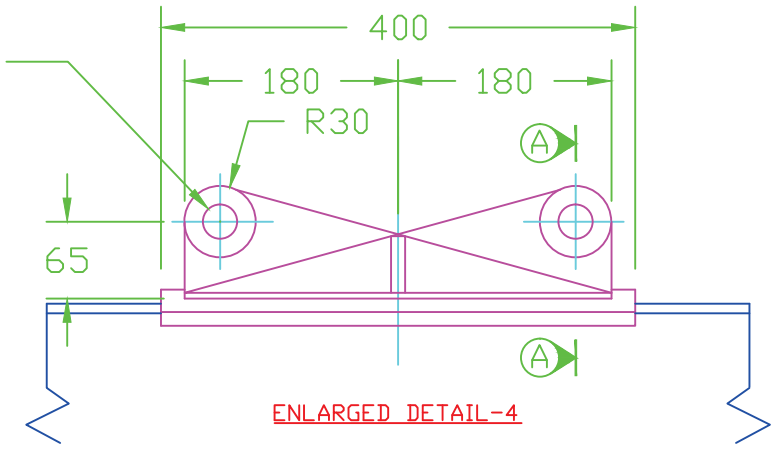


ENLARGED DETAIL-4

ROPE CLEVIS BRACKET

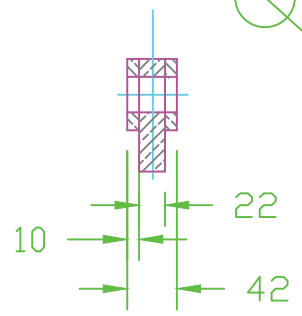


SECTION A-A

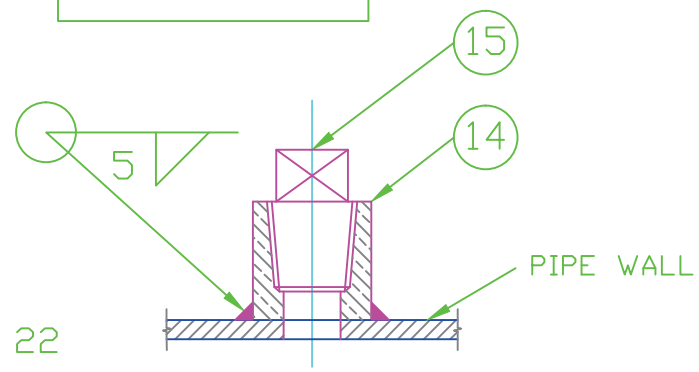


ENLARGED DETAIL-5

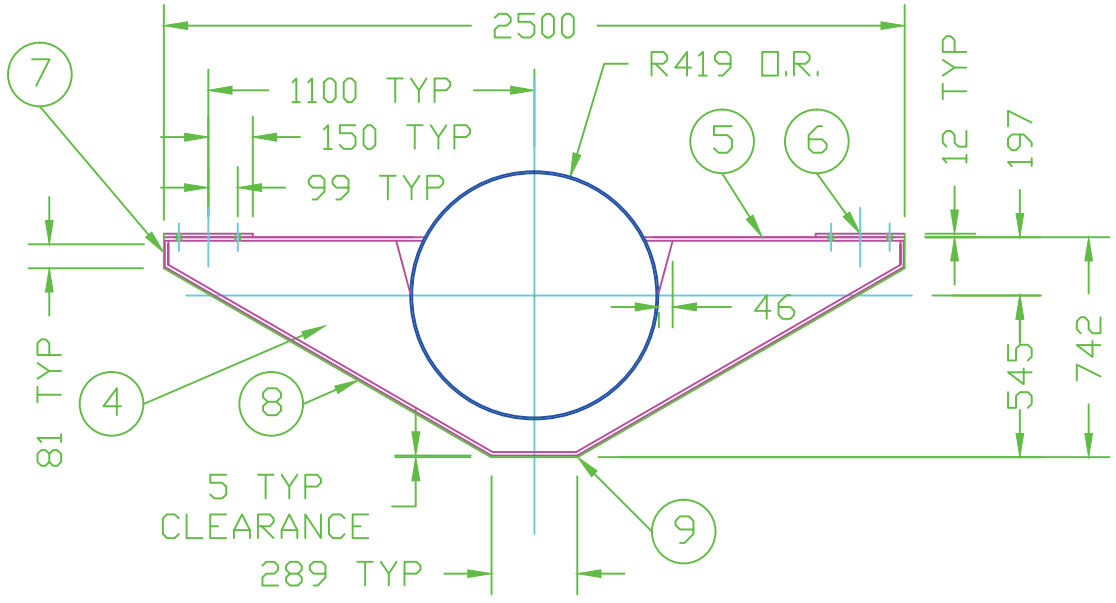


SECTION D-D

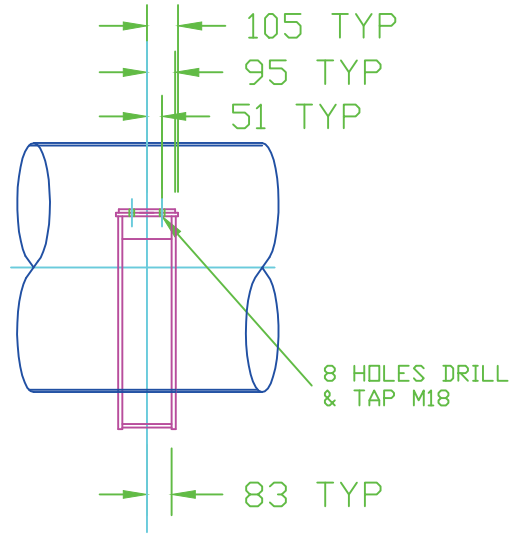


| ITEM # | QTY | ITEM | MATERIAL | SIZE |
|---|---|---|---|---|
| 15 | 1 | PLUG | 3/4" NPT | – |
| 14 | 1 | 1/2 COUPLING | 3/4" NPT | – |
| 13 | 1 | WEB | FB 45x12 | 160 |
| 12 | 4 | PAD | PL 10 | 60ø |
| 11 | 2 | LUG | PL 22 | 95x360 |
| 10 | 1 | SADDLE | PL 12 | 250x400 |
| 9 | 3 | WEB | PL 6 | 290x166 |
| 8 | 6 | WEB | PL 6 | 1263x166 |
| 7 | 6 | WEB | PL 6 | 166x81 |
| 6 | 6 | MTG. PL | PL 12 | 300x190 |
| 5 | 6 | TOP | PL 12 | 874x210 |
| 4 | 6 | SADDLE | PL 12 | 2500x718 |
| 3 | 20 | GUSSET | FB 40x8 | 40 |
| 2 | 2 | FLANGE | D99-3300 | 33" |
| 1 | 1 | PIPE | 838 OD x 6 WALL | 16883 |

FILE NAME: C:\D-8330\D99-3406.DWG CAD# D99-3000-60

| REVISIONS | MADE BY | DATE | LETTER | FOR CONSTRUCTION ISSUES | DATE | REFERENCE DWGS |
|---|---|---|---|---|---|---|
| – | – | – | – | | | |
| | | | | | March 27/00 | D99-3300 |

ELMEC ENGINEERING LIMITED
N.VANCOUVER,B.C.

POSTMET

CTC

RICHARDS BAY
DRY JETTY SHIPLOADER

TELESCOPE
OUTER PIPE

DRN JCG
CHK
ENGR
JOB D-8330

DWG NO. D99-3406
REV –
SCALE N.T.S.
DATE 14 March 2000

## FIELD ASSEMBLY OF COMPONENTS

1. COMPONENTS SHALL BE FREE OF DAMAGE BEFORE I INSTALLATION.
2. ALL FASTENERS SHALL BE GRADE 5 SAE OR ASTM A–325 BOLTS WITH CORRESPONDING NUTS – UNLESS OTHERWISE SPECIFIED.
3. MATING SURFACES SHALL BE FLUSH AND FREE OF BURRS AND SHALL BE PREPARED AS FOR ASTM A–325 –FRICTION TYPE CONNECTION.
4. BOLTS SHALL BE INSTALLED AND TENSIONED BY CALIBRATED WRENCH OR "TURN–OF–NUT METHOD.
5. BOLT TENSIONING SHALL BE UNDERTAKEN UNDER SUPERVISION OF AN I NSPECTOR WHO WILL FURNISH A LOG OF INSPECTION.
6. WHERE FASTENERS INSTALL INTO TAPPED HOLES, THEY SHALL BE CHECKED FOR BOTTOM CLEARANCE.
7. ALL BOLTS –STRUCTURAL, MACHINERY, FOUNDATION SHALL BE INSPECTED EVERY 6 MONTHS FOR CORRECT FASTENER TENSION.

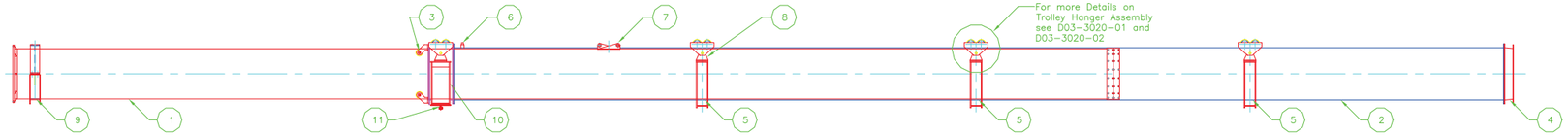


TELESCOPIC PIPE ARRAGEMENT

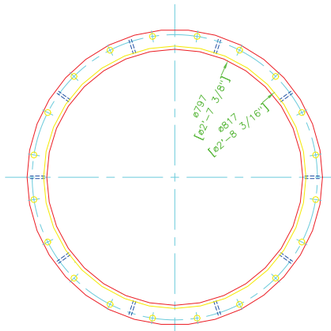


END VIEW

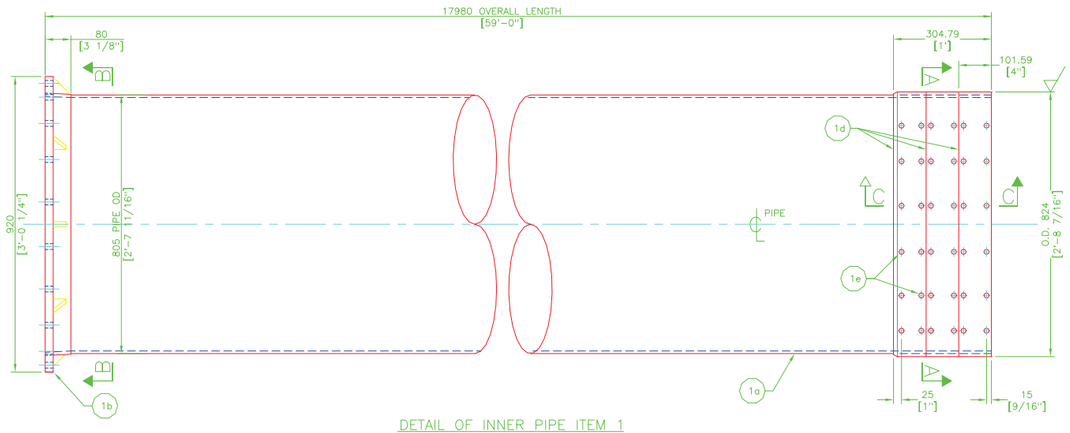


DETAIL OF INNER PIPE ITEM 1

Scale 1:20

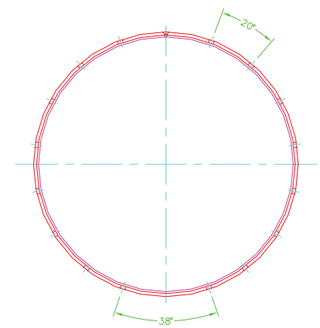


SECTION A–A

NOTE:
BRASS RING JOINTS TO BE STAGGERED AND OFFSET FROM BOTTOM CENTERLINE.

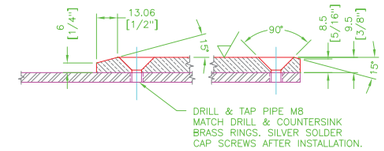


SECTION C–C

Scale 1:4

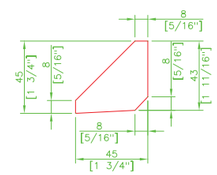


DETAIL ITEM–1c

Scale 1:4

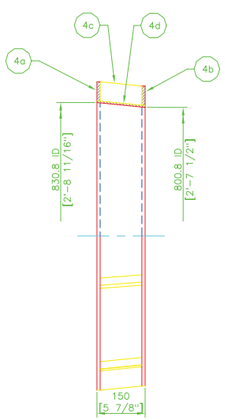


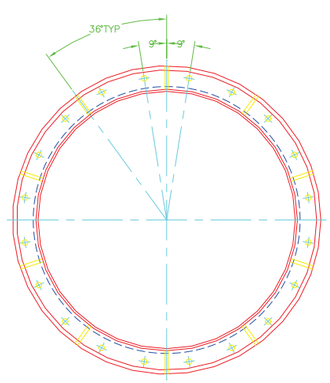


CONICAL TRANSITION ITEM 4

Scale 1:20

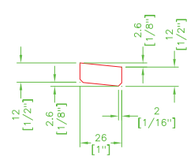


DETAIL ITEM–4c

Scale 1:20

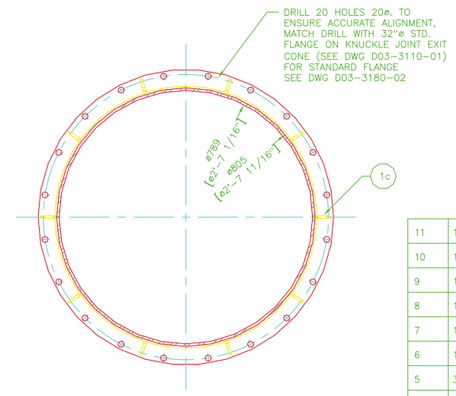


SECTION B–B

| ITEM | QTY | MATERIAL | SIZE/REF | CH. |
|---|---|---|---|---|
| 11 | 1 | CLEAN–OUT HATCH ASSEMBLY | D03–3130–05 | – |
| 10 | 1 | SLIP JOINT CLEAN–OUT ASSEMBLY | D03–3130–04 | – |
| 9 | 1 | INNER PIPE CLAMP ASSEMBLY | D03–3130–03 | – |
| 8 | 10 | TELESCOPIC PIPE HANGER ASSEMBLY | D03–3130–03 | – |
| 7 | 1 | TELESCOPIC PIPE ROPE CLEVIS BRACKET | D03–3130–02 | – |
| 6 | 1 | TELESCOPIC PIPE INSPECTION PLUG | D03–3130–02 | – |
| 5 | 3 | OUTER PIPE HANGER SUPPORT | D03–3130–02 | – |
| 4d | 1 | CONE Pl 6mm SS 304 | 2610 | – |
| 4c | 10 | RIB Fb 60x10 | 130 | – |
| 4b | 1 | 32" STANDARD ROUND FLANGE | D03–3180–02 | – |
| 4a | 1 | 33" STANDARD ROUND FLANGE | D03–3180–02 | – |
| 4 | 1 | CONICAL TRANSITION | – | – |
| 3 | 1 | SLIP JOINT GUIDE ASSEMBLY | D03–3130–04 | – |
| 2 | 1 | OUTER PIPE ARRANGEMENT | D03–3130–02 | – |
| 1e | 102 | M8x16 COUNTERSUNK HEAD CAP SCREW | – | – |
| 1d | 3 | FB 101.6 x 12 Brass Ring | 2567 lg | – |
| 1c | 10 | Gusset FB 40 x 8 | 40 lg | – |
| 1b | 1 | Fabricated Weld Neck | – | – |
| 1a | 1 | Pipe 805mm OD 6mm th | 17980 lg | – |
| 1 | 1 | INNER PIPE ARRANGEMENT | – | – |

| REVISIONS | MADE BY | DATE | REV |
|---|---|---|---|
| INNER PIPE DIMS REVISED, 3rd BRASS RING ADDED | BvdS | Jan 26/06 | A |

| ISSUES | DATE |
|---|---|
| Certified / As Built | Feb 21/06 |
| Certified for Construction | Mar 23/04 |

| REFERENCE DWGS |
|---|
| D03–3020–01 |
| D03–3000–03 |
| D03–3000–01 |

ELMEC ENGINEERING LIMITED
N.VANCOUVER,B.C.

SOUTH AFRICAN PORT OPERATIONS

CTC

PORTNET
RICHARDS BAY–DRY BULK JETTY SHIPLOADER
SHIPLOADER 2

1000 T.P.H SHIPLOADER
TELESCOPIC PIPE ARRANGEMENT & INNER PIPE DETAILS

HULK

DRN JCG
CHK
ENGR
JOB D–3220

DWG NO. D03–3130–01
REV A
SCALE 1:100
DATE Mar 04/03

FILE NAME: D03–3130–01 LEO REF. # D99–3400 FILE PATH: C:\Projects By Customer\Shiploader\Hulk\D03–3130 (TELESCOPE)\D03–3130–01 (TELESCOPIC ARRANGEMENT AND DETAIL).dwg
CAD# D03–3114

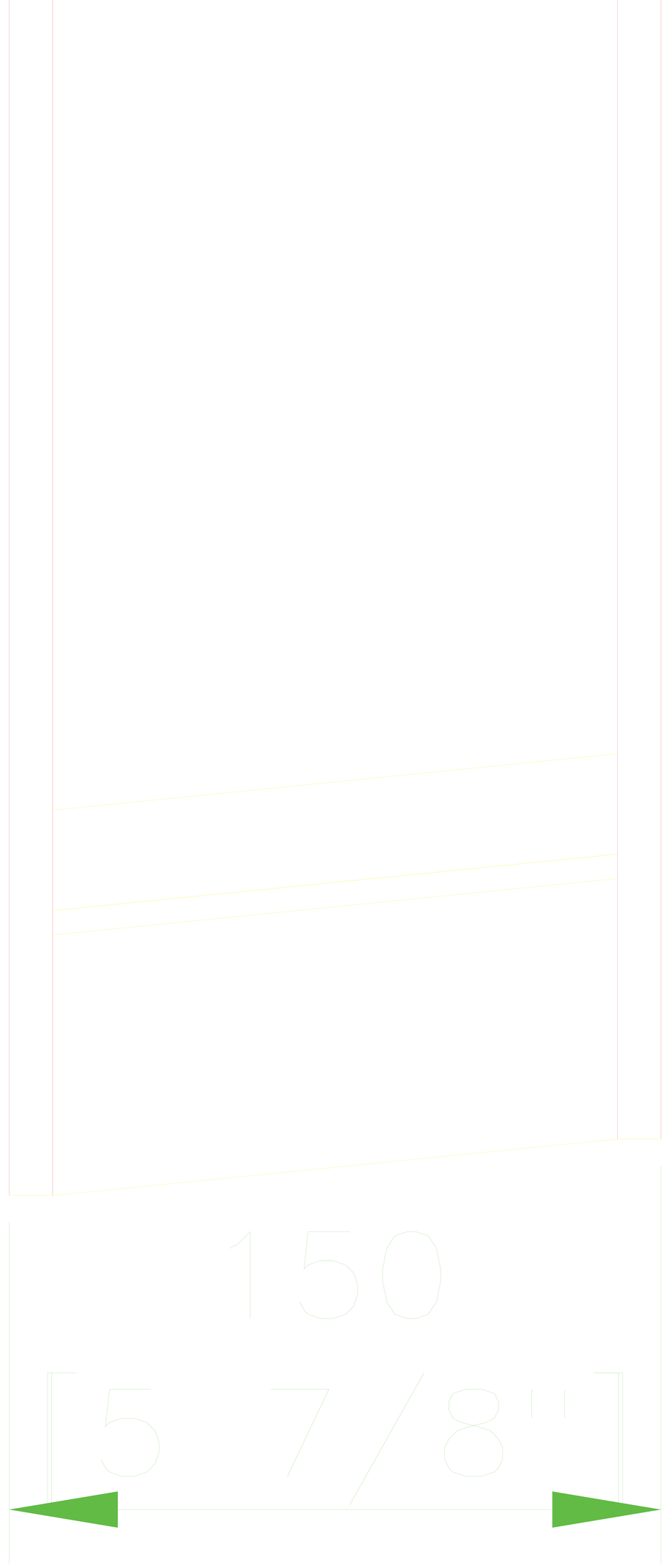
150
[5 7/8"]

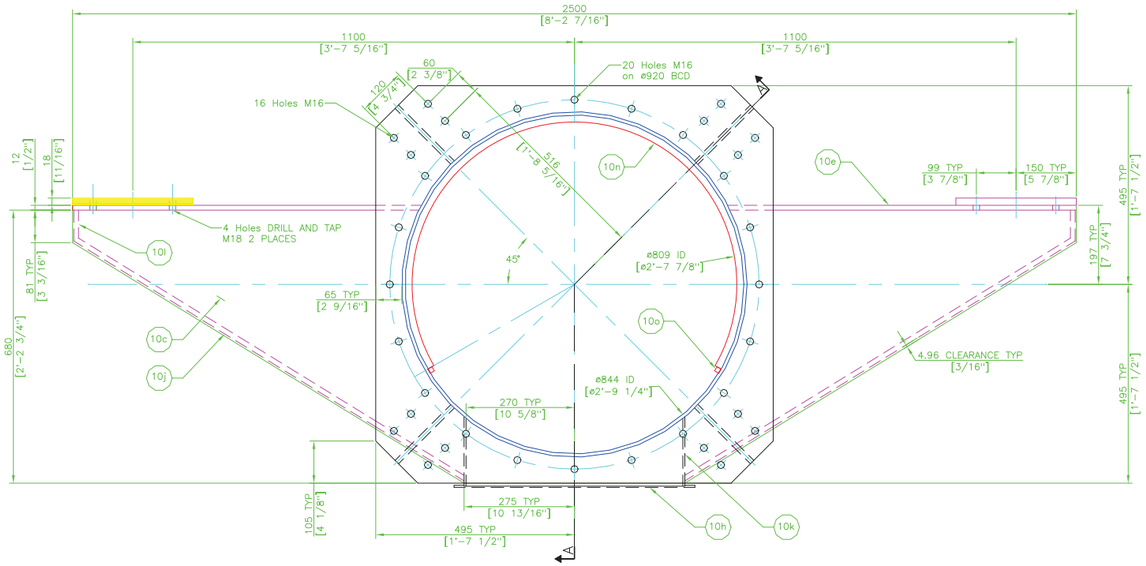


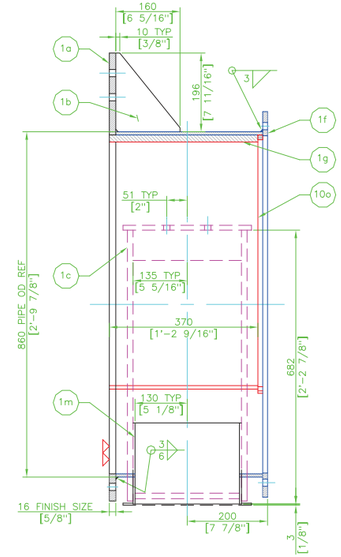


SECTION A–A

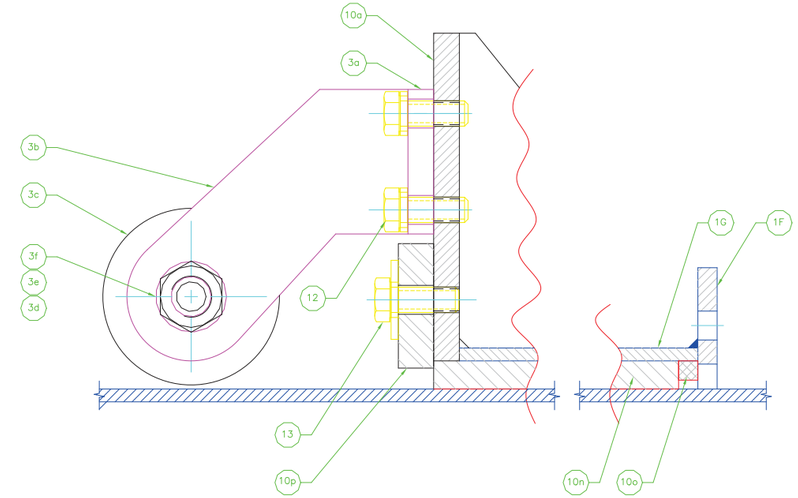


SLIP JOINT GUIDE ARRANGEMENT

SCALE 1:4

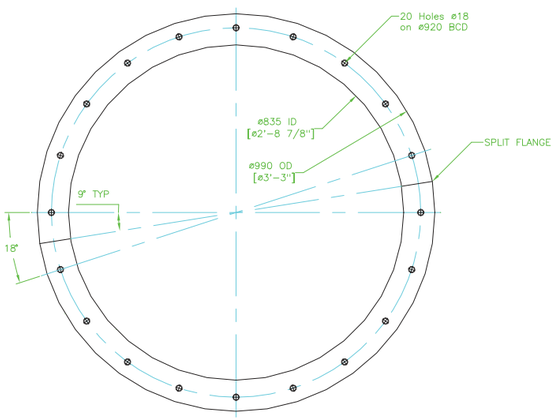


DETAIL OF ITEM–10p

ITEM 1

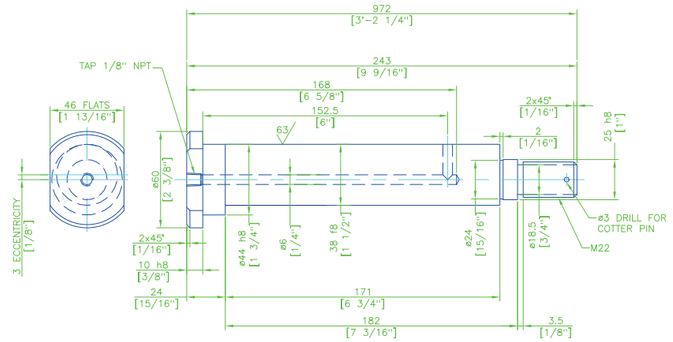


DETAIL OF GUIDE WHEEL SHAFT ITEM–3e

SCALE 1:4

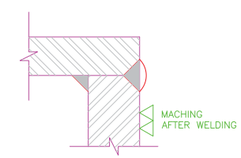


SECTION B–B

NOTE:

UPON ADJUSTMENT OF ROLLER SHAFT,
TACK WELD BARS ON ITEM 3,
TO KEEP SHAFT FROM TURNING

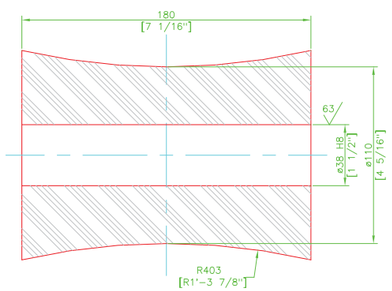


DETAIL OF ITEM–3c

SCALE 1:4

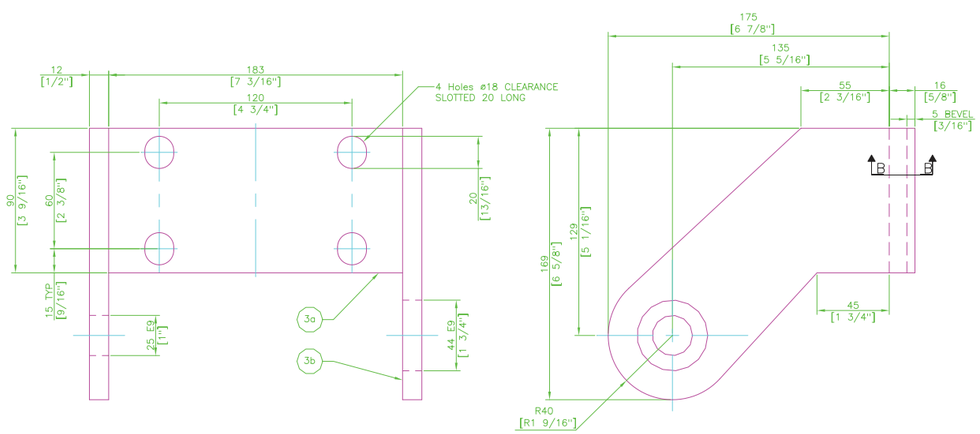


DETAIL OF WHEEL SUPPORT

SCALE 1:4

| ITEM | QTY | MATERIAL | SIZE/REF | CH. |
|---|---|---|---|---|
| 13 | 20 | Hex Head Bolt | M16 x 40 | – |
| 12 | 16 | Hex Head Bolt | M16 x 40 | – |
| 10o | 1 | Sleeve Stopper 12x12 bar | 3500 Lg | – |
| 10n | 1 | Guide Sleeve Polypropelene | 3000x370x20 | – |
| 10m | 2 | Box Side Plate Pl 5 | 540 x 181 | – |
| 10l | 2 | Support Side Plate Pl 12 | 270 x 64 | – |
| 10k | 2 | Box Side Plate Pl 5 | 270 x 181 | – |
| 10j | 2 | Bottom Plate Pl 12 | 260 x 1141 | – |
| 10h | 1 | Clean–out Harch Door | D03–3130–06 | – |
| 10g | 1 | Guide Pipe 838 OD 8 wall | 400 lg | – |
| 10f | 1 | 33" Standard Flange | D99–3300 | – |
| 10e | 2 | Top Plate Pl 12 | 880 x 300 | – |
| 10c | 2 | Saddle Pl 12 | 680 x 2500 | – |
| 10b | 4 | Gusset Pl 10 | 170 x 207 | – |
| 10a | 1 | Face Plate Pl 20 | 990 x 990 | – |
| 10 | 1 | Slip Joint Clean–out | – | – |
| 3f | 8 | Grease Fitting | 1/8" NPT | – |
| 3e | 4 | Guide Wheel Shaft 60ø CRS | D99–3404 | – |
| 3d | 4 | Castle Nut | M22 | – |
| 3c | 4 | Guide Wheel | 120ø x180 | – |
| 3b | 8 | Wheel Support PL 12 | 175x169 | – |
| 3a | 4 | Wheel Support Back PLate PL 16 | 183x90 | – |
| 3 | 4 | Wheel Support Bracket | – | – |

| REVISIONS | MADE BY | DATE | REV |
|---|---|---|---|
| – | – | – | – |

| ISSUES | DATE |
|---|---|
| Certified for Construction | Mar 23/04 |

REFERENCE DWGS: –

ELMEC ENGINEERING LIMITED
N.VANCOUVER,B.C.

SOUTH AFRICAN PORT OPERATIONS

CTC

PORTNET
RICHARDS BAY–DRY BULK JETTY SHIPLOADER
SHIPLOADER 2

1000 T.P.H SHIPLOADER
TELESCOPE
SLIP JOINT ASSEMBLY AND DETAILS

HULK

DRN JCG
CHK
ENGR
JOB D–3220

DWG NO. D03–3130–04
REV –
SCALE 1:16
DATE Mar 07/03

FILE NAME: D03–3130–04 LEO REF. # D99–3403/04 FILE PATH: C:\Projects By Customer\Shiploader\Hulk\D03–3130 (TELESCOPE)\D03–3130–04 (SLIP JOINT AND CLEAN–OUT ARRANGEMENT).dwg
CAD# D03–3117

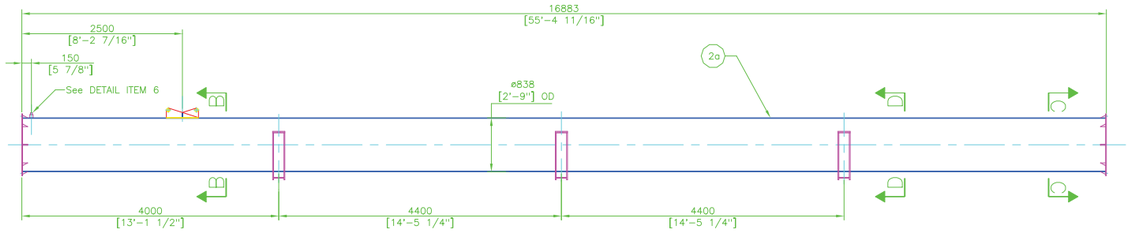


OUTER PIPE

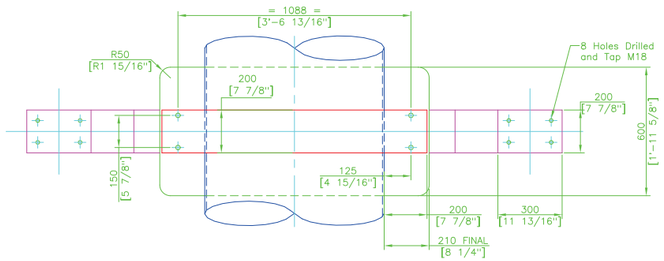


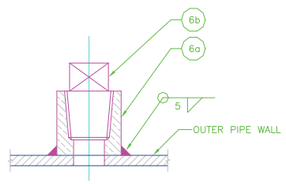


ENLARGED–ITEM 6

N.T.S.

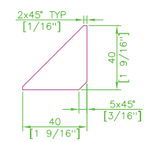


DETAIL–ITEM 2c

SCALE 1:4

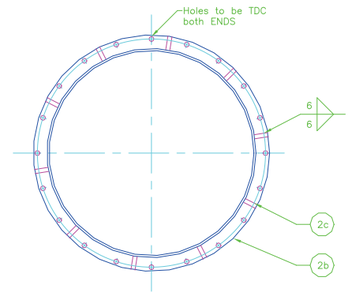


SECTION C–C

Typ. Both ends of Outer Pipe

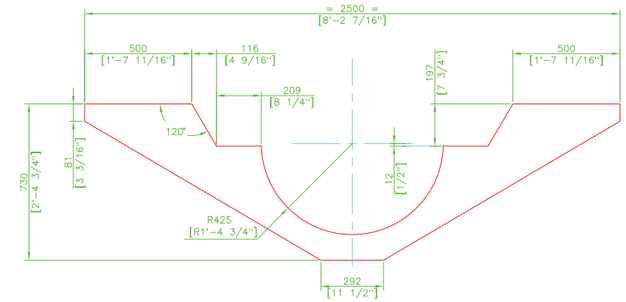


DETAIL–ITEM 5a

SCALE 1:30

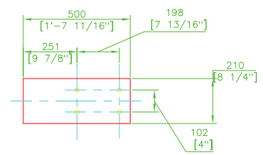


DETAIL–ITEM 5b

SCALE 1:30

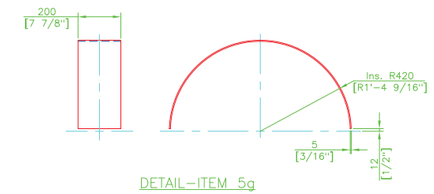


DETAIL–ITEM 5g

SCALE 1:30

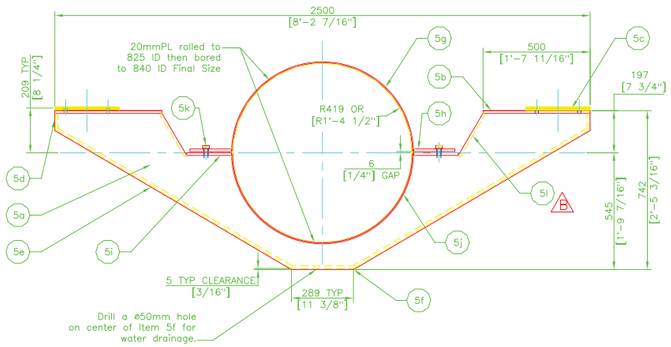


SECTION D–D

SCALE 1:30

3 ASSEMBLIES REQUIRED

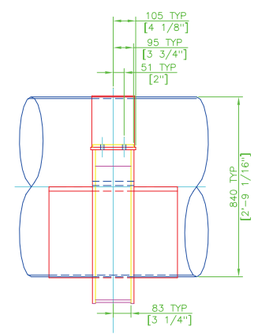


OUTER PIPE HANGER–ITEM 5

SCALE 1:30

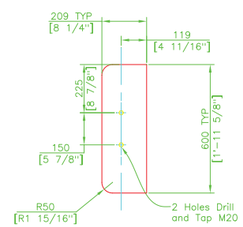


DETAIL–ITEM 5i

SCALE 1:30

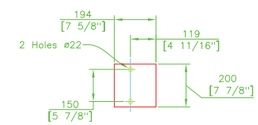


DETAIL–ITEM 5h

SCALE 1:30

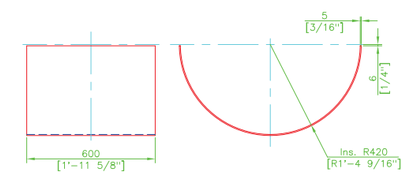


DETAIL–ITEM 5j

SCALE 1:30

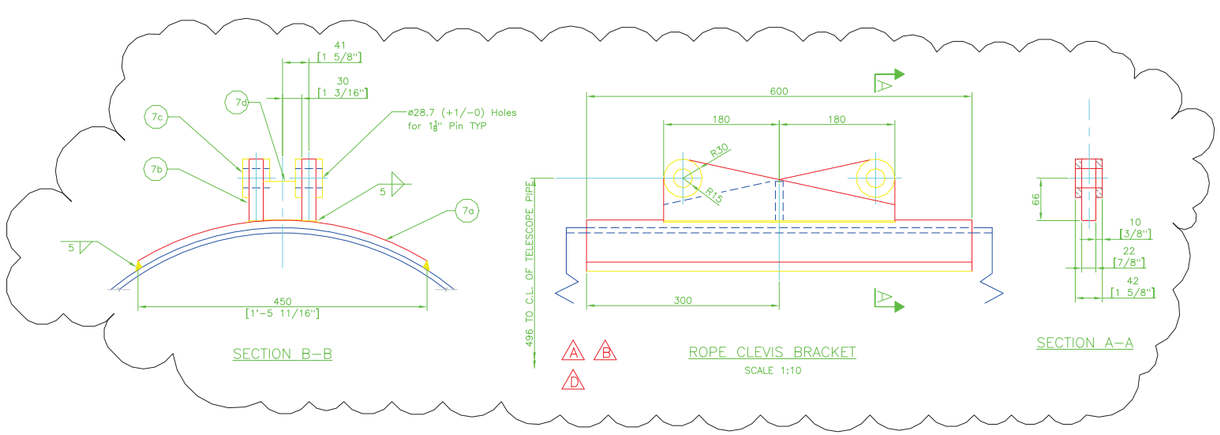


SECTION B–B

ROPE CLEVIS BRACKET

SCALE 1:10

SECTION A–A

| ITEM | QTY | MATERIAL | SIZE/REF | CH. |
|---|---|---|---|---|
| 7d | 1 | Web FB 60 x 12 | 40 | – |
| 7c | 4 | Pad PL 10 | ø60 | – |
| 7b | 2 | Lug PL 22 | 360 x 95 | – |
| 7a | 1 | Saddle PL 12 | 600 x 470 | – |
| 6b | 1 | 3/4" NPT Plug | – | – |
| 6a | 1 | 3/4" NPT Half Coupling | – | – |
| 5l | 2 | Web PL 6 | 166 x 229 | – |
| 5k | 4 | Hex Bolt and Lock Washer | M20 x 40 | – |
| 5j | 1 | Saddle PL 12 | 1316 x 600 | – |
| 5i | 2 | Flange PL 12 | 600 x 209 | – |
| 5h | 2 | Flange PL 12 | 200 x 194 | – |
| 5g | 1 | Saddle PL 12 | 423 x 200 | – |
| 5f | 1 | Web PL 6 | 166 x 289 | – |
| 5e | 2 | Web PL 6 | 166 x 1263 | – |
| 5d | 2 | Web PL 6 | 166 x 81 | – |
| 5c | – | Shims PL 1mm & 2mm | 300 x 190 | – |
| 5b | 2 | Top PL 12 | 500 x 200 | – |
| 5a | 2 | Saddle PL 12 | 2500 x 730 | * |
| 2c | 20 | Gusset FB 40 x 8 | 40 | – |
| 2b | 2 | 33" STANDARD ROUND FLANGE | D03–3180–02 | – |
| 2a | 1 | Pipe 838 OD x 6 wall | 16883 | – |

Certified for Construction – As Built
ELMEC ENGINEERING LIMITED
Feb 7/06

| REVISIONS | MADE BY | DATE | REV |
|---|---|---|---|
| Cable attachment locations revised | BvdS | Jan 24/06 | D |
| Cable attachment locations revised | BvdS | Sept 8/04 | C |
| Item 5l added for Sealing Proposes | JCG | Apr 06/04 | B |
| General Revision on Rope Clevis Bracket Arrangement | JCG | Mar 27/04 | A |

| ISSUES | DATE | REFERENCE DWGS |
|---|---|---|
| Certified As Built | Feb 7/06 | |
| Certified for Construction | Apr 07/04 | |
| Certified for Construction | Mar 27/04 | |
| Certified for Construction | Mar 23/04 | D03–3130–01 |

ELMEC ENGINEERING LIMITED
N.VANCOUVER,B.C.

SOUTH AFRICAN PORT OPERATIONS

CTC

PORTNET
RICHARDS BAY–DRY BULK JETTY SHIPLOADER
SHIPLOADER 2

1000 T.P.H SHIPLOADER
TELESCOPE
OUTER PIPE ARRANGEMENT

HULK

DRN JCG
CHK
ENGR
JOB D–3220

DWG NO. D03–3130–02
REV d
SCALE 1:100
DATE Mar 04/03

FILE NAME: D03–3130–02
CAD# D03–3115
LEO REF. # D99–3406
FILE PATH: C:\Projects By Customer\Shiploader\Hulk\D03–3130 (TELESCOPE)\D03–3130–02 (OUTER PIPE ARRANGEMENT).dwg

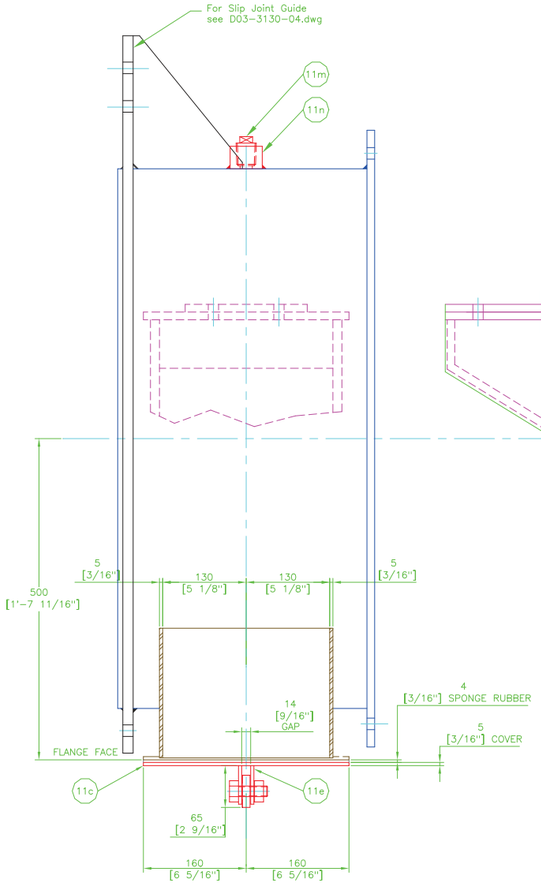


CLEAN OUT HATCH SIDE VIEW

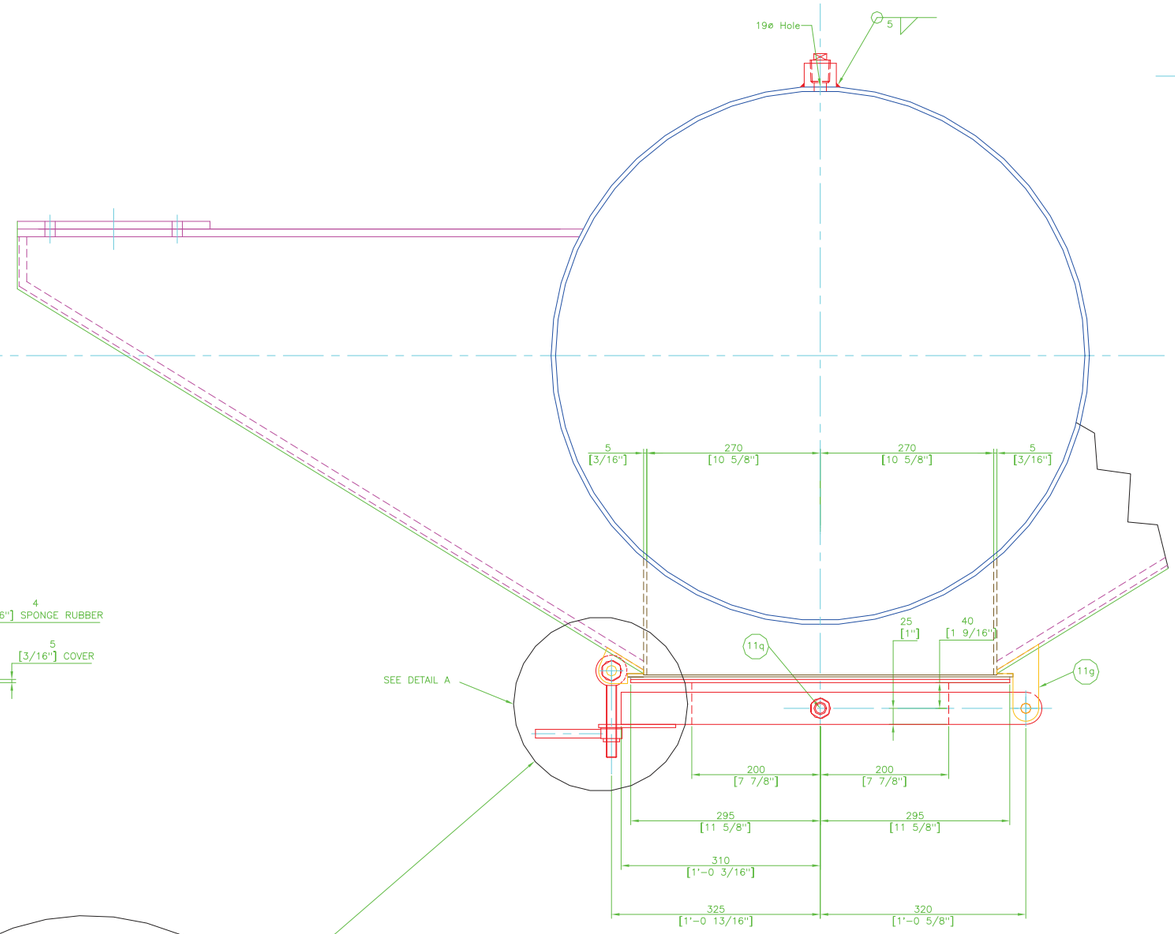


CLEAN OUT HATCH FRONT VIEW

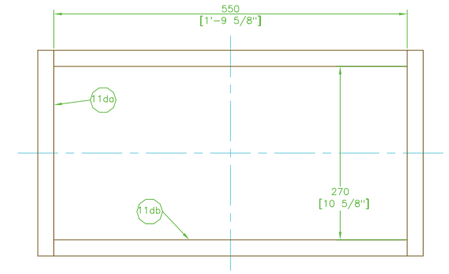


ITEM-11d

Scale 1:10

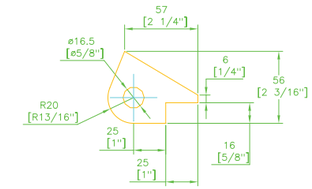


ITEM-11h

Scale 1:20

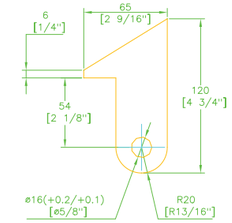


ITEM-11g

Scale 1:20

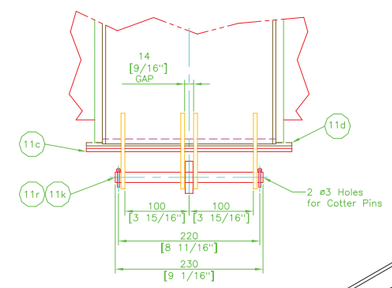


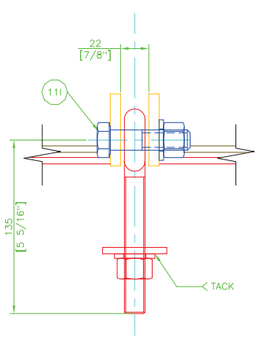


VIEW C

SCALE:1:20

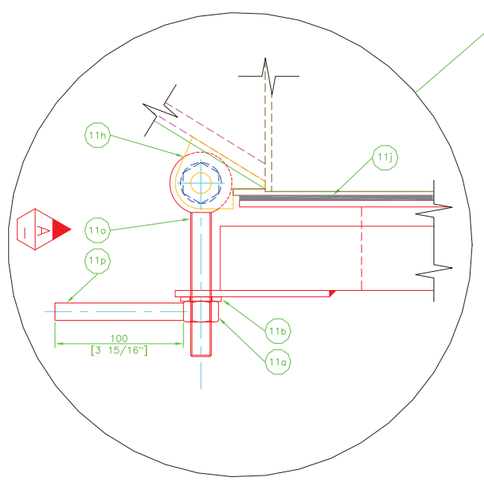


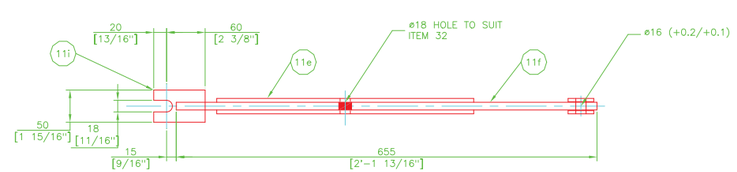


ARM DETAIL

DESIGN FROZEN

| ITEM | QTY | MATERIAL | SIZE/REF |
|---|---|---|---|
| 11r | 2 | ø3 Cotter Pin | 520 |
| 11q | 1 | M16x75 Hex. Bolt c/w Jam Nut | – |
| 11p | 1 | ø16 Handle Bar | 100 |
| 11o | 1 | M16x135 Eye Bolt ( Stainless Steel ????? ) | – |
| 11n | 1 | 1in NPT Plug | – |
| 11m | 1 | 1in NPT half coupling | – |
| 11l | 1 | M16x60 Hex. Bolt c/w Nut | – |
| 11k | 1 | ø16 Support Pin | 230 |
| 11j | 1 | Sponge Rubber Gasket 4thk | 1740x25 |
| 11i | 1 | Locking Plate FB 12x50 | 80 |
| 11h | 2 | Eye Bolt Support PL 10 | 70x56 |
| 11g | 4 | Hinge Bracket PL 6 | 120x65 |
| 11f | 1 | Arm FB 12x50 | 655 |
| 11e | 2 | Cover Plate Stiffener FB 6x60 | 400 |
| 11db | 2 | Flange FB 5x25 | 550 |
| 11da | 2 | Flange FB 5x25 | 320 |
| 11c | 1 | Cover Plate PL 5 | 320x590 |
| 11b | 1 | ø18 Flat Washer | – |
| 11a | 1 | M16 Hex. Ny-lock | – |

S. GYABRONKA P.Eng
ELMEC ENGINEERING LIMITED
N.VANCOUVER,B.C.
SIGNATURE ON FILE

| REVISIONS | MADE BY | DATE | REV |
|---|---|---|---|
| – | – | – | – |

| ISSUES | DATE |
|---|---|
| Certified for Construction | Mar 23/04 |

| REFERENCE DWGS |
|---|
| D03-3130-01 |

ELMEC ENGINEERING LIMITED
N.VANCOUVER,B.C.

SOUTH AFRICAN PORT OPERATIONS

CTC

PORTNET
RICHARDS BAY-DRY BULK JETTY SHIPLOADER
SHIPLOADER 2

1000 T.P.H SHIPLOADER
TELESCOPE
CLEAN-OUT HATCH

HULK

DRN JCG
CHK
ENGR
JOB D-3220

DWG NO. D03-3130-05
REV –
SCALE 1:10
DATE Mar 07/03

FILE NAME: D03-3130-05 FILE PATH: C:\Projects By Customer\Shiploader\Hulk\D03-3130 (TELESCOPE)\D03-3130-05 (SLIP JOINT & HATCH).dwg
CAD# D03-3118 LEO REF. # 099-3405

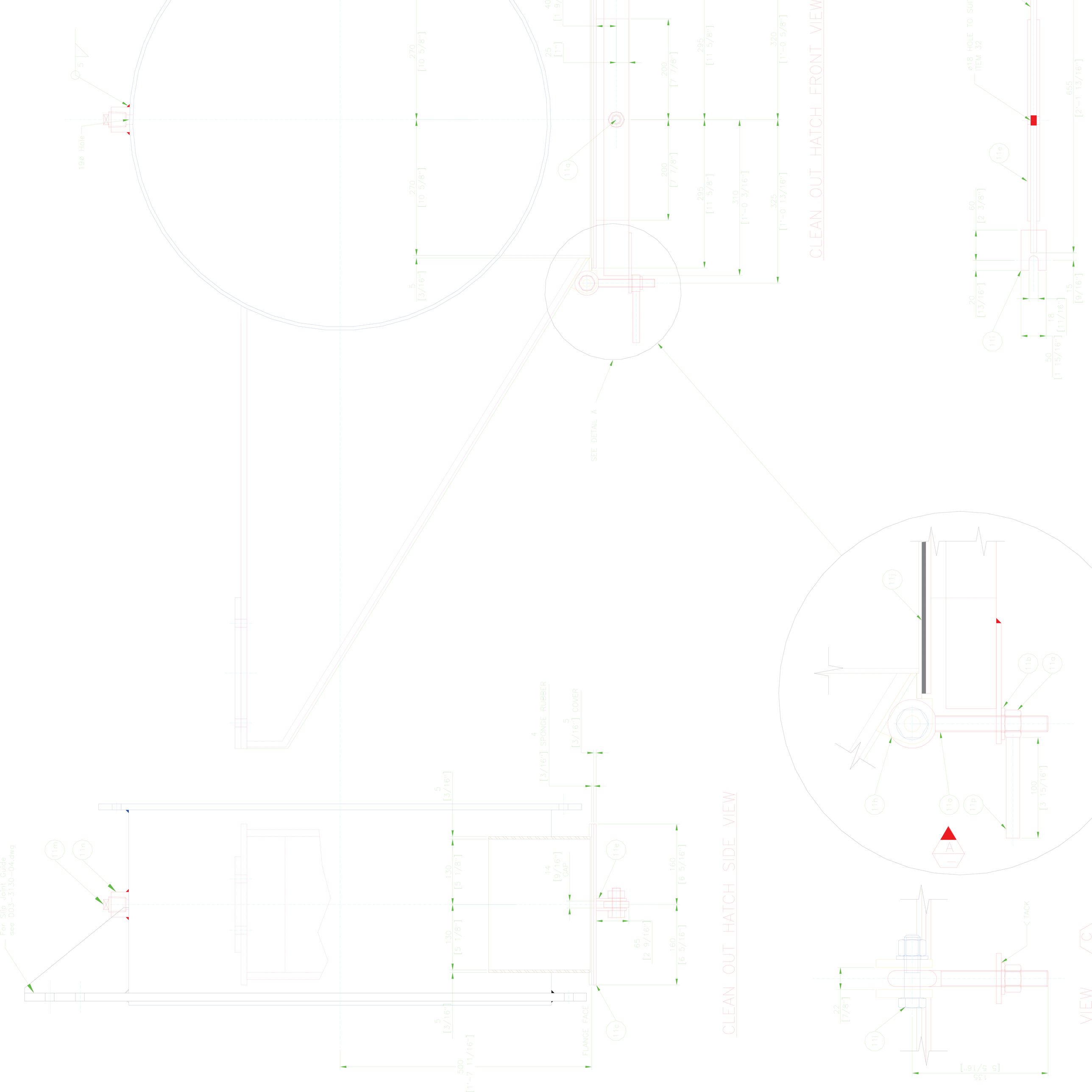
CLEAN OUT HATCH FRONT VIEW
CLEAN OUT HATCH SIDE VIEW
VIEW C
19ø Hole
Ø18 HOLE TO SUIT ITEM 32
SEE DETAIL A
SPONGE RUBBER
COVER
FLANGE FACE
GAP
TACK
For Slip Joint Guide see D03-3130-04.dwg
270 [10 5/8"]
5 [3/16"]
25 [1"]
40 [1 9/16"]
200 [7 7/8"]
295 [11 5/8"]
310 [1'-0 3/16"]
320 [1'-0 5/8"]
325 [1'-0 13/16"]
655 [2'-1 13/16"]
60 [2 3/8"]
20 [13/16"]
15 [9/16"]
18 [11/16"]
50 [1 15/16"]
130 [5 1/8"]
14 [9/16"]
65 [2 9/16"]
160 [6 5/16"]
500 [1'-7 11/16"]
100 [3 15/16"]
22 [7/8"]
135 [5 5/16"]
5
4
11a
11b
11c
11e
11f
11g
11h
11i
11j
11l
11m
11n
11o
11p

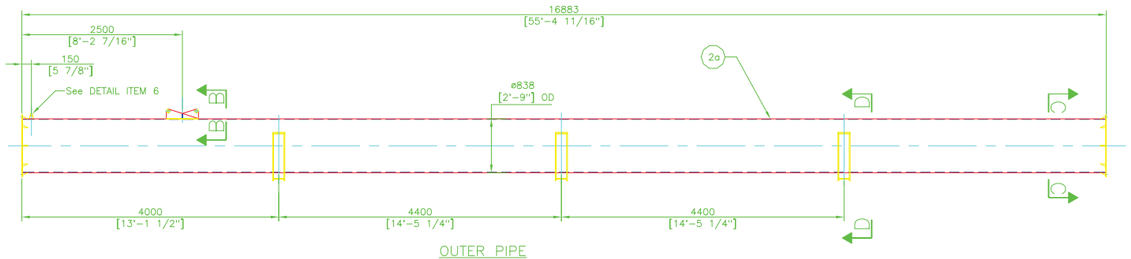


OUTER PIPE

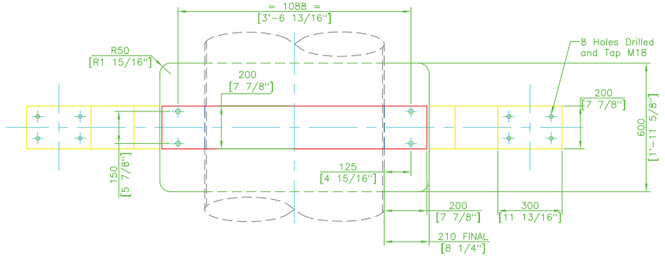


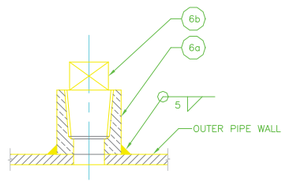


ENLARGED–ITEM 6

N.T.S.

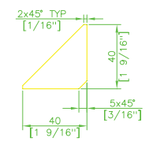


DETAIL–ITEM 2c

SCALE 1:4

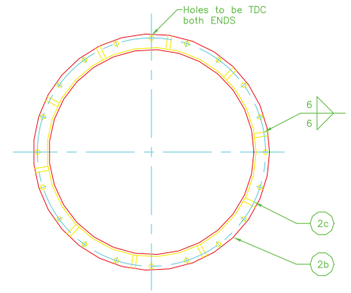


SECTION C–C

Typ. Both ends of Outer Pipe

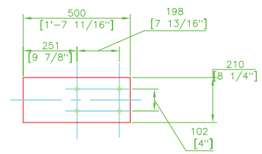


DETAIL–ITEM 5b

SCALE 1:30

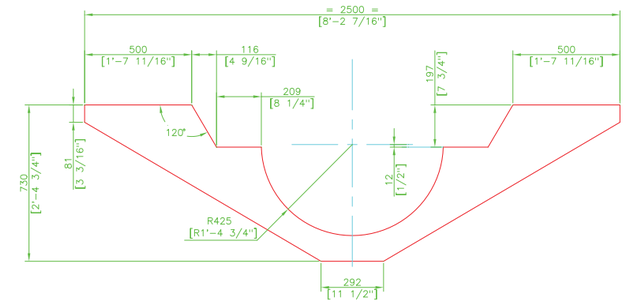


DETAIL–ITEM 5a

SCALE 1:30

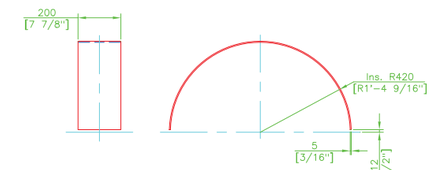


DETAIL–ITEM 5g

SCALE 1:30

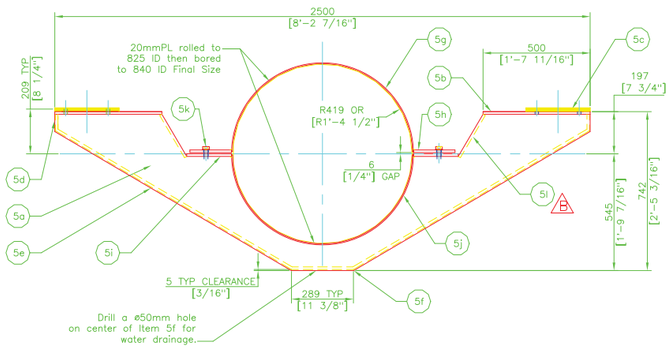


SECTION D–D

3 ASSEMBLIES REQUIRED

SCALE 1:30

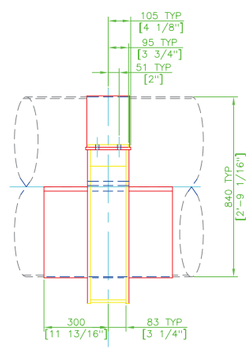


OUTER PIPE HANGER–ITEM 5

SCALE 1:30

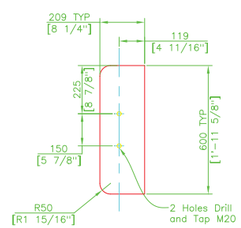


DETAIL–ITEM 5i

SCALE 1:30

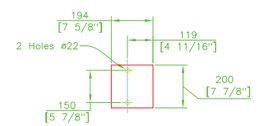


DETAIL–ITEM 5h

SCALE 1:30

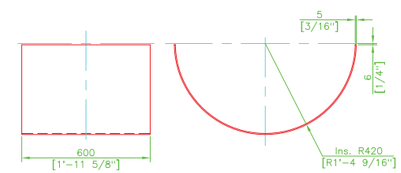


DETAIL–ITEM 5j

SCALE 1:30

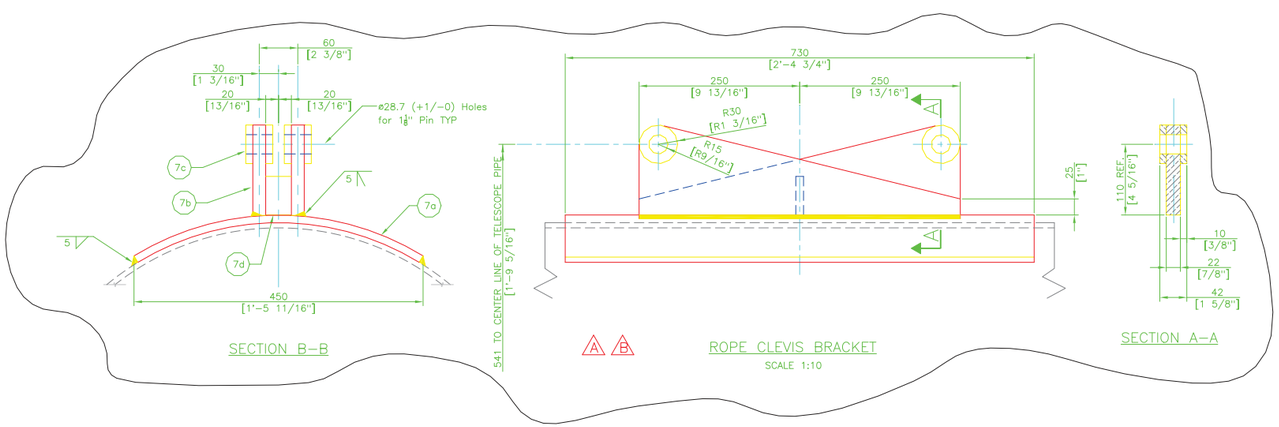


| ITEM | QTY | MATERIAL | SIZE/REF | CH |
|---|---|---|---|---|
| 7d | 1 | Web FB 60 x 12 | 40 | – |
| 7c | 4 | Pad PL 12 | ø60 | – |
| 7b | 2 | Lug PL 20 | 500 x 140 | – |
| 7a | 1 | Saddle PL 12 | 600 x 475 | – |
| 6b | 1 | 3/4" NPT Plug | – | – |
| 6a | 1 | 3/4" NPT Half Coupling | – | – |
| 5l | 2 | Web PL 6 | 166 x 229 | – |
| 5k | 4 | Hex Bolt and Lock Washer | M20 x 40 | – |
| 5j | 1 | Saddle PL 12 | 1316 x 600 | – |
| 5i | 2 | Flange PL 12 | 600 x 209 | – |
| 5h | 2 | Flange PL 12 | 200 x 194 | – |
| 5g | 1 | Saddle PL 12 | 423 x 200 | – |
| 5f | 1 | Web PL 6 | 166 x 289 | – |
| 5e | 2 | Web PL 6 | 166 x 1263 | – |
| 5d | 2 | Web PL 6 | 166 x 81 | – |
| 5c | – | Shims PL 1mm & 2mm | 300 x 190 | – |
| 5b | 2 | Top PL 12 | 500 x 200 | – |
| 5a | 2 | Saddle PL 12 | 2500 x 730 | * |
| 2c | 20 | Gusset FB 40 x 8 | 40 | – |
| 2b | 2 | 33" STANDARD ROUND FLANGE | D03–3180–02 | – |
| 2a | 1 | Pipe 838 OD x 6 wall | 16883 | – |

| REVISIONS | MADE BY | DATE | REV |
|---|---|---|---|
| Cable attachment locations revised | BvdS | Sept 8/04 | C |
| Item 5l added for Sealing Purposes | JCG | Apr 06/04 | B |
| General Revision on Rope Clevis Bracket Arrangement | JCG | Mar 27/04 | A |

| ISSUES | DATE | REFERENCE DWGS |
|---|---|---|
| Revision C Issued | Sept 8/04 | |
| Certified for Construction | Apr 07/04 | |
| Certified for Construction | Mar 27/04 | |
| Certified for Construction | Mar 23/04 | D03–3130–01 |

ELMEC ENGINEERING LIMITED
N.VANCOUVER,B.C.

SOUTH AFRICAN PORT OPERATIONS

CTC

PORTNET
RICHARDS BAY–DRY BULK JETTY SHIPLOADER
SHIPLOADER 2

1000 T.P.H SHIPLOADER
TELESCOPE
OUTER PIPE ARRANGEMENT

HULK

DRN JCG
CHK
ENGR
JOB D–3220

DWG NO. D03–3130–02
REV C
SCALE 1:100
DATE Mar 04/03

FILE NAME: D03–3130–02 FILE PATH: C:\Projects By Customer\Shiploader\Hulk\D03–3130 (TELESCOPE)\D03–3130–02 (OUTER PIPE ARRANGEMENT).dwg
CAD# D03–3115 LEO REF. # D99–3406

PROVISION OF ELMEC 1- FABRICATE AND SUPPLY TELESCOPIC PIPE AT SOC LTD OPERATING AS TRANSNET PORT TERMINALS AT THE PORT OF RICHARDS BAY

| CRITERIA | | DESCRIPTION (Tick √) | WEIGHT (Points) % | SCORING PRINCIPAL (Tick √) | | | | | |
|---|---|---|---|---|---|---|---|---|---|
| | | | | | | Score | Comments | Score | Comments |
| Criteria Scoring | Company's Track Record | Submit Proof of purchase orders( POs) for manufacturing of shiploader Telescopic extendable pipe and gyro major pipe (bend or gyro-guide pipes ) of above R600K. | 100% | 3 or above proof of purchase orders submitted | 100% | | | | |
| | | | | 2 proof of purchase orders submitted | 80% | | | | |
| | | | | 1 proof of purchase orders submitted | 60% | | | | |
| | | | | 0 proof of purchase orders submitted | 0% | | | | |
| | Technical Threshold 80% | | | | | | | | |