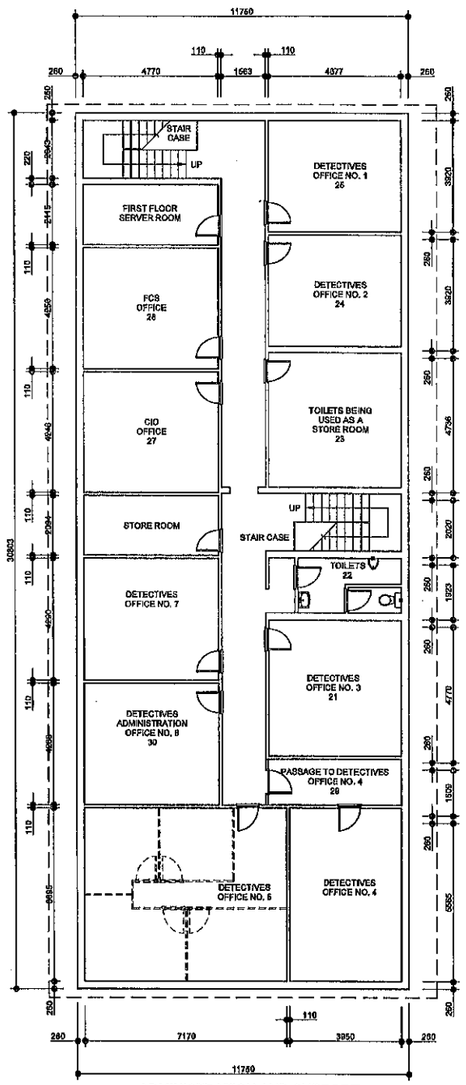

ADMINISTRATION AND SUPPORT
OFFICE BLOCK FIRST FLOOR

1 : 100

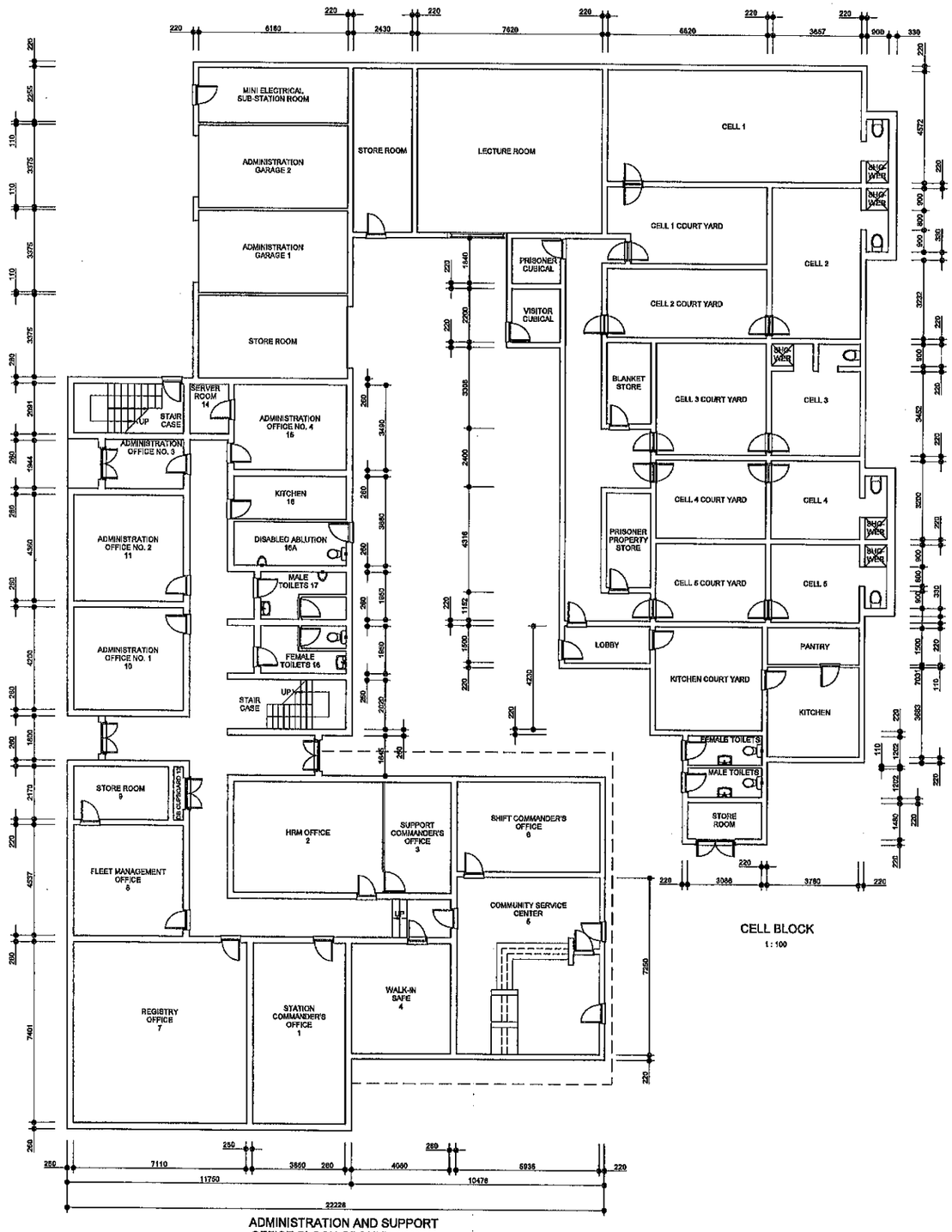

ADMINISTRATION AND SUPPORT
OFFICE BLOCK GROUND FLOOR

1 : 100

CELL BLOCK

1 : 100

No.	DATE	AMENDMENT	D.P.V.E.

Copyright vested in the South African Police Service

as built drawings

name:

date:

professional registration no.:

job no. name

page 1/1

A1

SOUTH AFRICAN POLICE SERVICE
PROGRAM & PROJECT MANAGEMENT

SAPS DIVISION SCM
FACILITY MANAGEMENT
PRIVATE BAG X 264
PRETORIA
0001

TEL: 012 846 6036
FAX: 012 845 6762

discipline

MULTIDISCIPLINARY

service

APPOINTMENT OF A BUILD ENVIRONMENT PROFESSIONAL TO FULFILL THE ROLE OF A LEAD CONSULTANT: PLANNED REPAIR AND MAINTENANCE PROJECT AT THEUNISSEN POLICE STATION (FREE STATE)

tender number

Tender No. 19/1/9/1/33 TB (20)

drawing title

SAPS THEUNISSEN
ADMINISTRASTION, SUPPORT
AND CELL BLOCK GROUND FLOOR
AND FIRTST FLOOR PLAN

project no. | drawing no.

scale: 1 : 100 (A1 SHEET) | drawn: F BAAYMAN

date: SEPTEMBER 2022 | checked: J GROBBELAAR

drawing number

THS/S1/GR-001

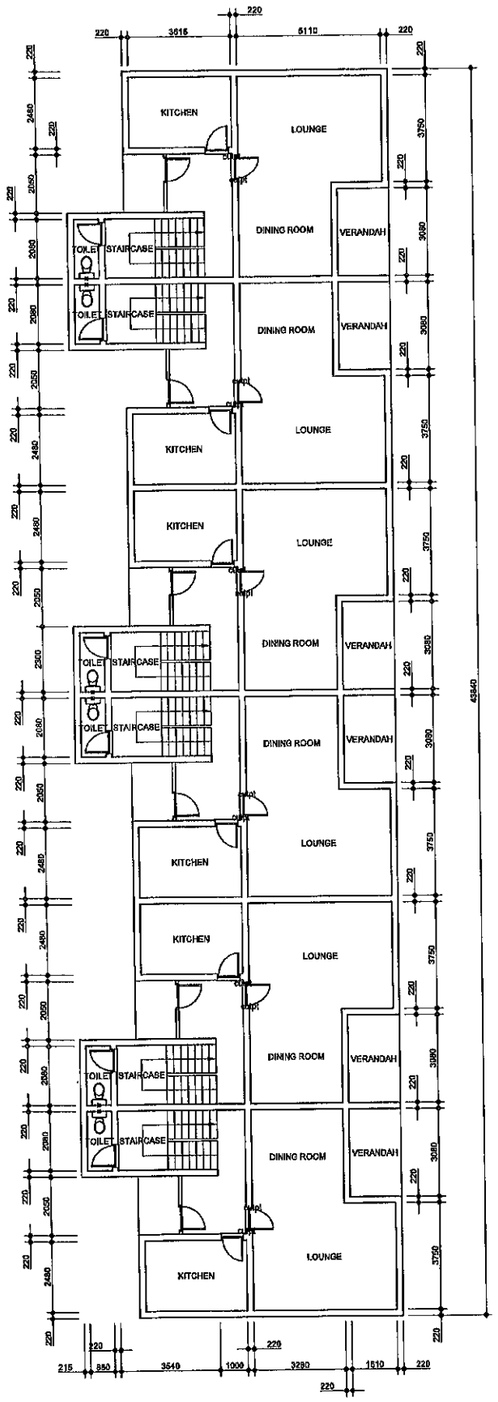

HOUSING QUARTERS: GROUND FLOOR

1 : 100

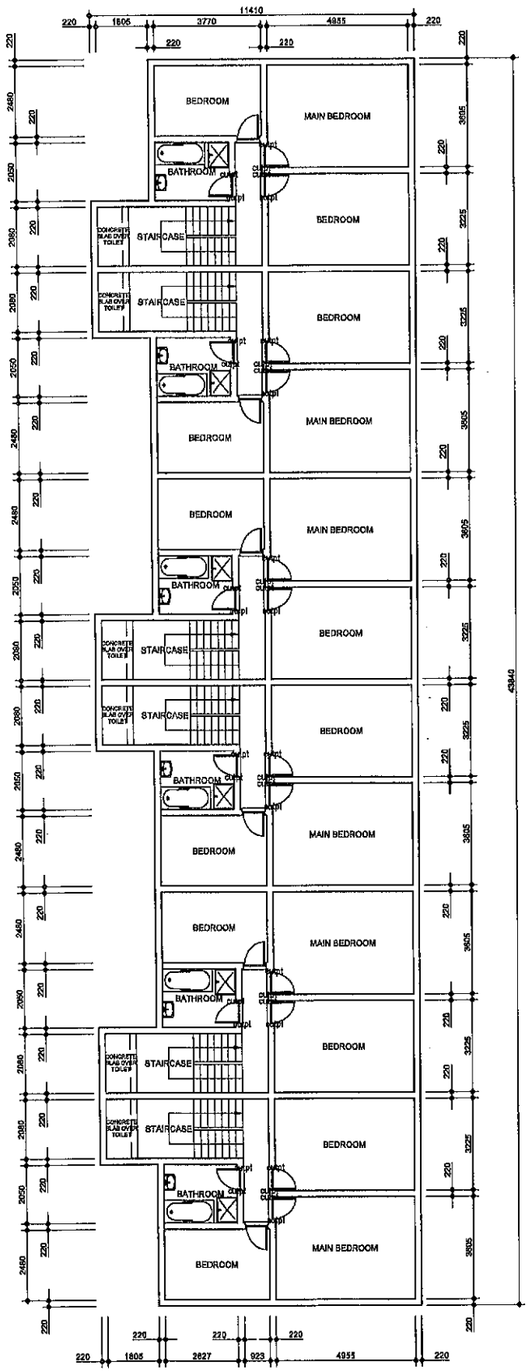

HOUSING QUARTERS: FIRST FLOOR

1 : 100

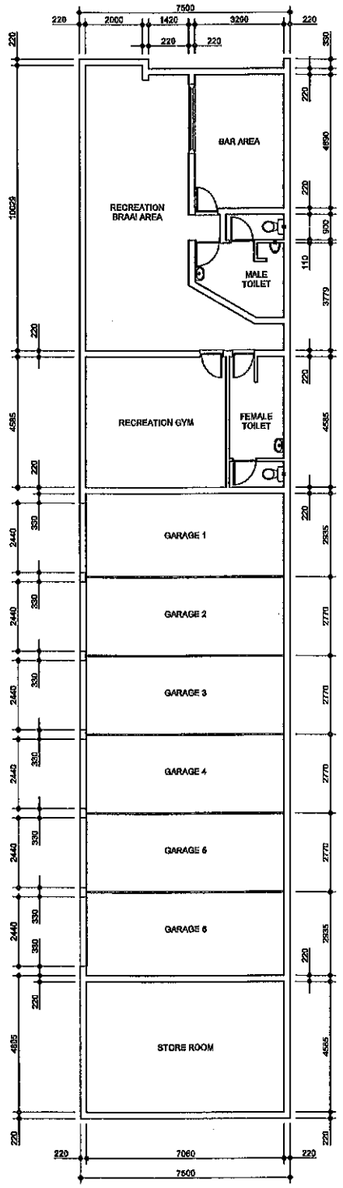

HOUSING QUARTERS: GARAGE, STORES AND RECREACTION AREA

1 : 100

No.	DATE	AMENDMENT	D.P.W.

Copyright vests in the South African Police Service

as built drawings

DETAIL SCALE SHOULD BE AS PER DOMESTIC DRAWING
Refer AS BUILT DRAWING REQUIREMENTS

name:

date:

professional registration no.:

cad file name

paper size: A1

SOUTH AFRICAN POLICE SERVICE
PROGRAM & PROJECT MANAGEMENT

SAPS DIVISION SCM
FACILITY MANAGEMENT
PRIVATE BAG X 264
PRETORIA
0001

TEL: 012 845 8938
FAX: 012 845 6782

consultant

INGS

discipline

MULTIDISCIPLINARY

service

APPOINTMENT OF A BUILD ENVIRONMENT PROFESSIONAL TO FULFILL THE ROLE OF A LEAD CONSULTANT:
PLANNED REPAIR AND MAINTENANCE PROJECT AT
THEUNISSEN POLICE STATION
(FREE STATE)

tender/project

Tender No. 19/1/9/1/33 TB (20)

drawing title

SAPS THEUNISSEN
HOUSING QUARTERS & GARAGES
FLOOR PLAN

revision no.

designed

scale: 1 : 100 (A1 SHEET)

drawn: F BAAYMAN

date: SEPTEMBER 2022

checked: J GROBBELAAR

drawing number

THS/S1/GR-002

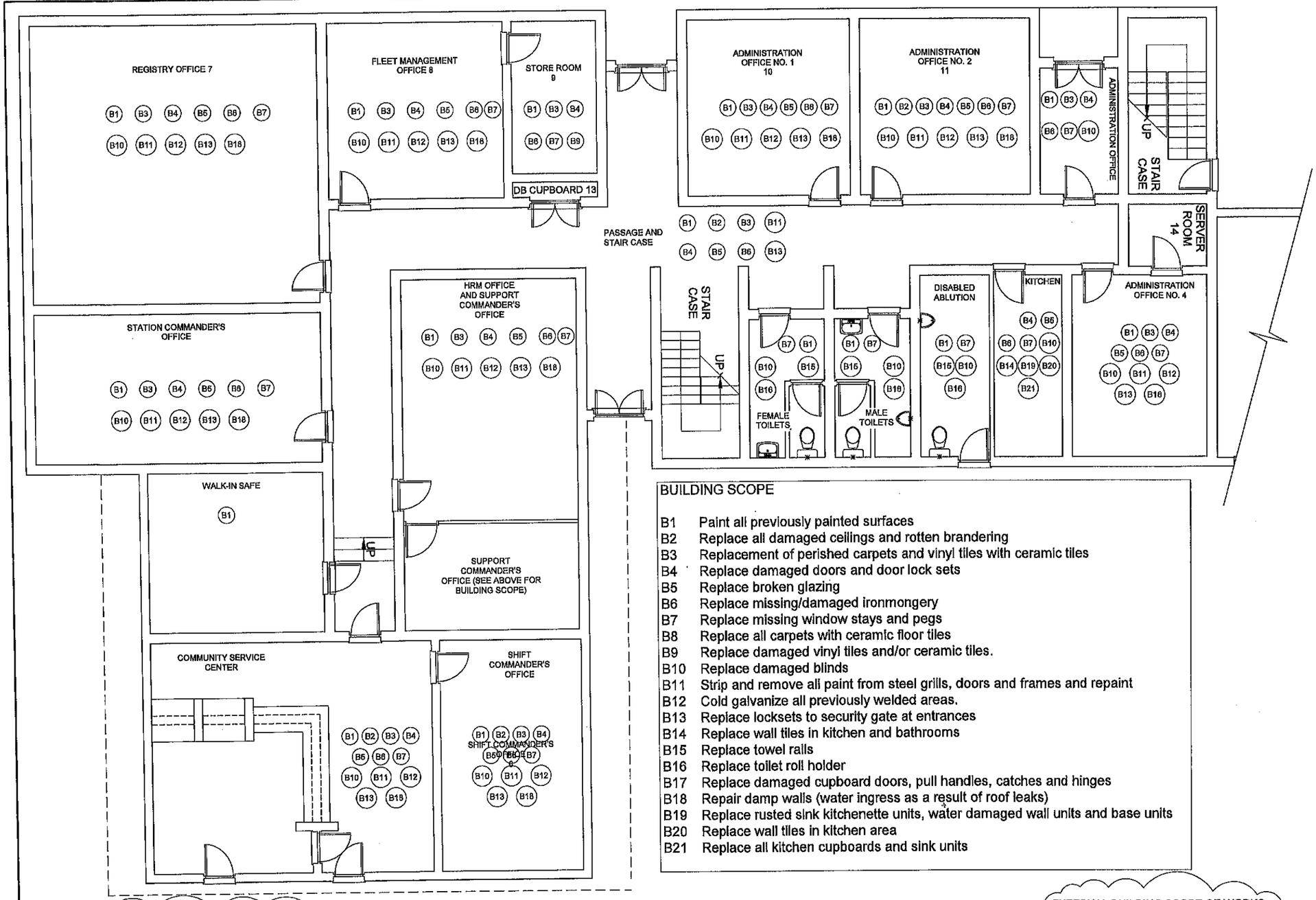

BUILDING SCOPE

B1	Paint all previously painted surfaces
B2	Replace all damaged ceilings and rotten brandering
B3	Replacement of perished carpets and vinyl tiles with ceramic tiles
B4	Replace damaged doors and door lock sets
B5	Replace broken glazing
B6	Replace missing/damaged ironmongery
B7	Replace missing window stays and pegs
B8	Replace all carpets with ceramic floor tiles
B9	Replace damaged vinyl tiles and/or ceramic tiles.
B10	Replace damaged blinds
B11	Strip and remove all paint from steel grills, doors and frames and repaint
B12	Cold galvanize all previously welded areas.
B13	Replace locksets to security gate at entrances
B14	Replace wall tiles in kitchen and bathrooms
B15	Replace towel rails
B16	Replace toilet roll holder
B17	Replace damaged cupboard doors, pull handles, catches and hinges
B18	Repair damp walls (water ingress as a result of roof leaks)
B19	Replace rusted sink kitchenette units, water damaged wall units and base units
B20	Replace wall tiles in kitchen area
B21	Replace all kitchen cupboards and sink units

FENCING SCOPE

F1	Painting of palisade fencing and gates.
F2	Cut and trim trees on fences and at buildings.
F3	Service gate motor, gate sensors and replace standby battery pack.
F4	Provide waste bins for all the buildings.
F5	Clean the site and remove debris to dumping site.

EXTERNAL BUILDING SCOPE OF WORKS

BE1	Replacement of rusted and dilapidated roof sheeting at all buildings with new concealed fixed roof sheeting or similar approved roof covering
BE2	Replace defective damaged timber truss elements, fascia and barge boards
BE3	Replace all rusted gutters and downpipes with seamless aluminium system
BE4	Clean external face brick facades

ADMINISTRATION AND SUPPORT OFFICE BLOCK GROUND FLOOR

1 : 50

No.	DATE	AMENDMENT	D.P.W.

Copyright vests in the South African Police Service

A1

SOUTH AFRICAN POLICE SERVICE
PROGRAM & PROJECT MANAGEMENT

SAPS DIVISION SCM
FACILITY MANAGEMENT
PRIVATE BAG X 254
PRETORIA
0001

TEL: 012 845 6939
FAX: 012 845 6762

MULTIDISCIPLINARY

APPOINTMENT OF A BUILD ENVIRONMENT PROFESSIONAL TO FULFILL THE ROLE OF A LEAD CONSULTANT: PLANNED REPAIR AND MAINTENANCE PROJECT AT THEUNISSEN POLICE STATION (FREE STATE)

Tender No. 19/1/9/1/33 TB (20)

SAPS THEUNISSEN
ADMINISTRASTION GROUND FLOOR:
BUILDING SCOPE OF WORKS

1 : 100 (A1 SHEET)	F SAAYMAN
SEPTEMBER 2023	J GROBBELAAR

THS/S2/BS-001

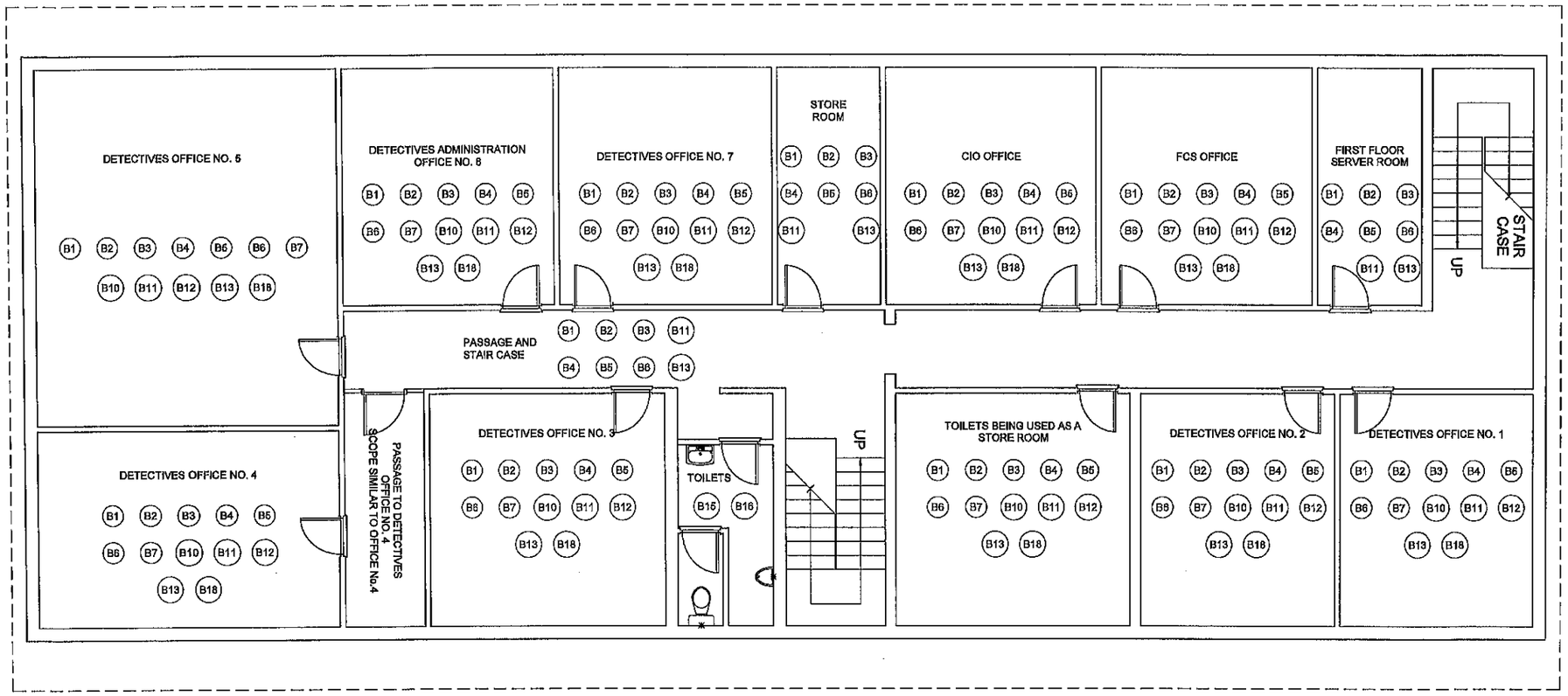

ADMINISTRATION AND SUPPORT
OFFICE BLOCK FIRST FLOOR
BUILDING SCOPE

1 : 50

BUILDING SCOPE

B1	Paint all previously painted surfaces
B2	Replace all damaged ceilings and rotten brandering
B3	Replacement of perished carpets and vinyl tiles with ceramic tiles
B4	Replace damaged doors and door lock sets
B5	Replace broken glazing
B6	Replace missing/damaged ironmongery
B7	Replace missing window stays and pegs
B8	Replace all carpets with ceramic floor tiles
B9	Replace damaged vinyl tiles and/or ceramic tiles.
B10	Replace damaged blinds
B11	Strip and remove all paint from steel grills, doors and frames and repaint
B12	Cold galvanize all previously welded areas.
B13	Replace locksets to security gate at entrances
B14	Replace wall tiles in kitchen and bathrooms
B15	Replace towel ralls
B16	Replace toilet roll holder
B17	Replace damaged cupboard doors, pull handles, catches and hinges
B18	Repair damp walls (water ingress as a result of roof leaks)

No.	DATE	AMENDMENT	D.P.W.

Copyright vests in the South African Police Service

AS BUILT DRAWINGS

CONFIRM WITH SITE REPRESENTATIVE AS THE DOCUMENTATION CONTAINS AMENDED AS BUILT DRAWING REQUIREMENTS

name: _____

date: _____

professional registration no.: _____

drawing size: A1

SOUTH AFRICAN POLICE SERVICE
PROGRAM & PROJECT MANAGEMENT

SAPS DIVISION SCM
FACILITY MANAGEMENT
PRIVATE BAG X 254
PRETORIA
0001

TEL: 012 845 6939
FAX: 012 845 6762

consultant

S

discipline

MULTIDISCIPLINARY

service

APPOINTMENT OF A BUILD ENVIRONMENT PROFESSIONAL TO FULFILL THE ROLE OF A LEAD CONSULTANT: PLANNED REPAIR AND MAINTENANCE PROJECT AT THEUNISSEN POLICE STATION (FREE STATE)

tender number

Tender No. 19/1/9/1/33 TB (20)

drawing title

SAPS THEUNISSEN
ADMINISTRASTION FIRTST FLOOR:
BUILDING SCOPE OF WORKS

revision no	designed
scale: 1 : 50 (A1 SHEET)	drawn: F BAAYMAN
date: SEPTEMBER 2023	checked: J OROSDELAAR

drawing number

THS/S2/BS-002

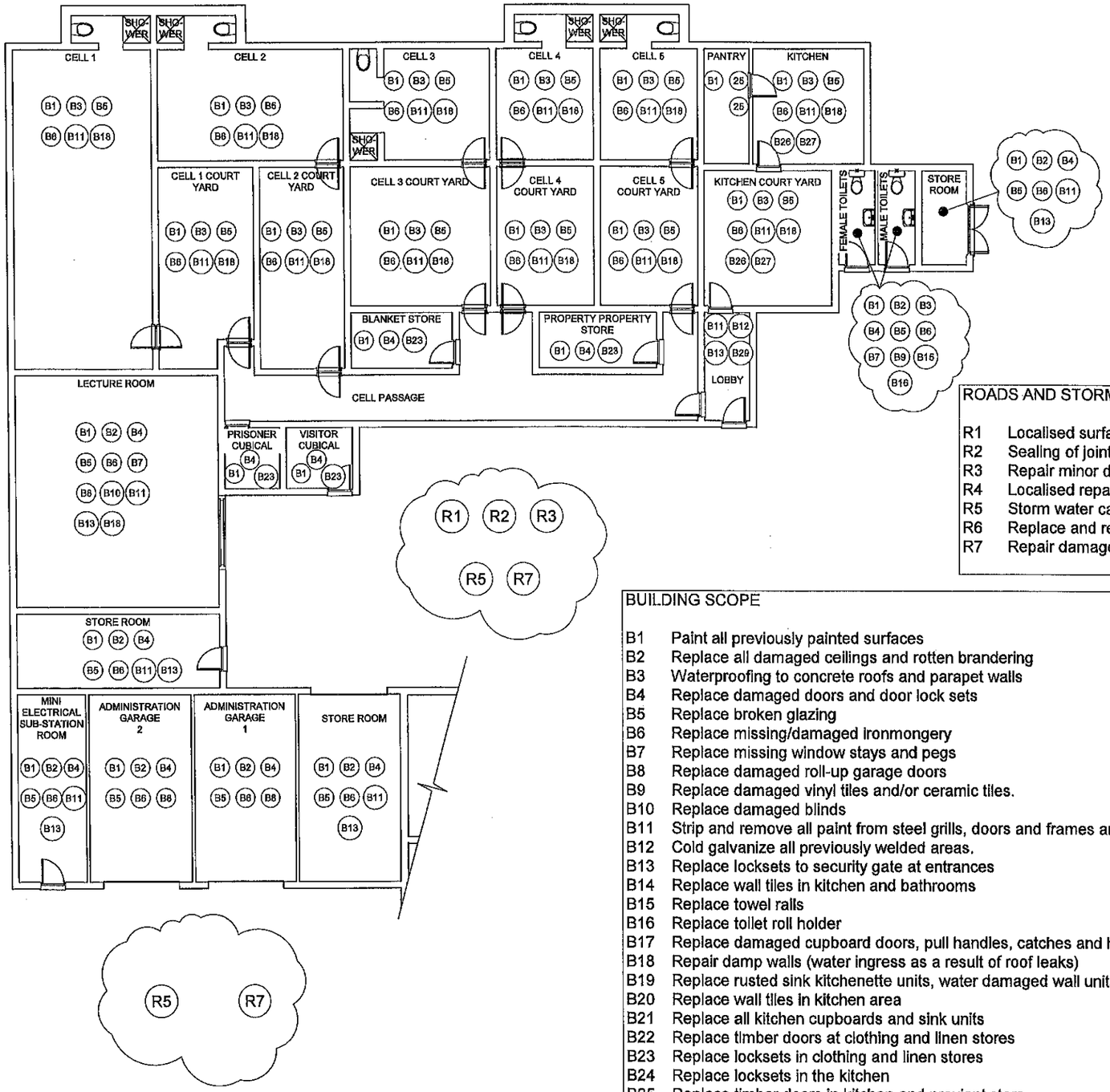

GARAGES, LECTURE ROOM, CELL BLOCK AND PUBLIC ABLUTIONS BUIDLING AND ROADS SCOPE

1 : 76

EXTERNAL BUILDING SCOPE OF WORKS

BE1 Replacement of rusted and dilapidated roof sheeting at all buildings with new concealed fixed roof sheeting or similar approved roof covering
BE2 Replace defective damaged timber truss elements, fascia and barge boards
BE3 Replace all rusted gutters and downpipes with seamless aluminium system
BE4 Clean external face brick facades

ROADS AND STORMWATER SCOPE

R1 Localised surface repair on concrete surfaced roads and areas.
R2 Sealing of joints.
R3 Repair minor damaged road and concrete surfaces.
R4 Localised repairs of concrete paving damaged by tree roots.
R5 Storm water catch pits and gullies to be repaired and grids replaced.
R6 Replace and repair paving areas and make good by removing roots of trees.
R7 Repair damaged bitumen surfaces.

BUILDING SCOPE

B1 Paint all previously painted surfaces
B2 Replace all damaged ceilings and rotten brandering
B3 Waterproofing to concrete roofs and parapet walls
B4 Replace damaged doors and door lock sets
B5 Replace broken glazing
B6 Replace missing/damaged ironmongery
B7 Replace missing window stays and pegs
B8 Replace damaged roll-up garage doors
B9 Replace damaged vinyl tiles and/or ceramic tiles.
B10 Replace damaged blinds
B11 Strip and remove all paint from steel grills, doors and frames and repaint
B12 Cold galvanize all previously welded areas.
B13 Replace locksets to security gate at entrances
B14 Replace wall tiles in kitchen and bathrooms
B15 Replace towel rails
B16 Replace toilet roll holder
B17 Replace damaged cupboard doors, pull handles, catches and hinges
B18 Repair damp walls (water ingress as a result of roof leaks)
B19 Replace rusted sink kitchenette units, water damaged wall units and base units
B20 Replace wall tiles in kitchen area
B21 Replace all kitchen cupboards and sink units
B22 Replace timber doors at clothing and linen stores
B23 Replace locksets in clothing and linen stores
B24 Replace locksets in the kitchen
B25 Replace timber doors in kitchen and proviant store
B26 Repaint natural gas cage
B27 Replace washing line in kitchen courtyard
B28 Repair non-contact visitor's facility glass barrier and seating area
B29 Clean external face brick facades

No.	DATE	AMENDMENT	S.P.W.

Copyright vested in the South African Police Service

as built drawings

CONSULTANT TO ENSURE CONTRACTOR AS BUILT INFORMATION IS CORRECTLY RECORDED
Archive AS BUILT DRAWINGS INCORPORATE

name:
date:
professional registration no.:

A1

SOUTH AFRICAN POLICE SERVICE
PROGRAM & PROJECT MANAGEMENT

SAPS DIVISION SCM
FACILITY MANAGEMENT
PRIVATE BAG X 254
PRETORIA
0001

TEL: 012 845 6939
FAX: 012 845 6762

S

MULTIDISCIPLINARY

APPOINTMENT OF A BUILD ENVIRONMENT PROFESSIONAL TO FULFILL THE ROLE OF A LEAD CONSULTANT: PLANNED REPAIR AND MAINTENANCE PROJECT AT THEUNISSEN POLICE STATION (FREE STATE)

Tender Number
Tender No. 19/1/9/1/33 TB (20)

Drawing title
SAPS THEUNISSEN:
SUPPORT, GARAGES,
CELL BLOCK AND PUBLIC ABLUTIONS:
BUILDING AND ROADS SCOPE OF WORKS

Scale: 1 : 76 (A1 SHEET)	Drawn: F BAAYMAN
Date: SEPTEMBER 2023	Checked: J GROOBBELAAR

Drawing number
THS/S2/BS-003

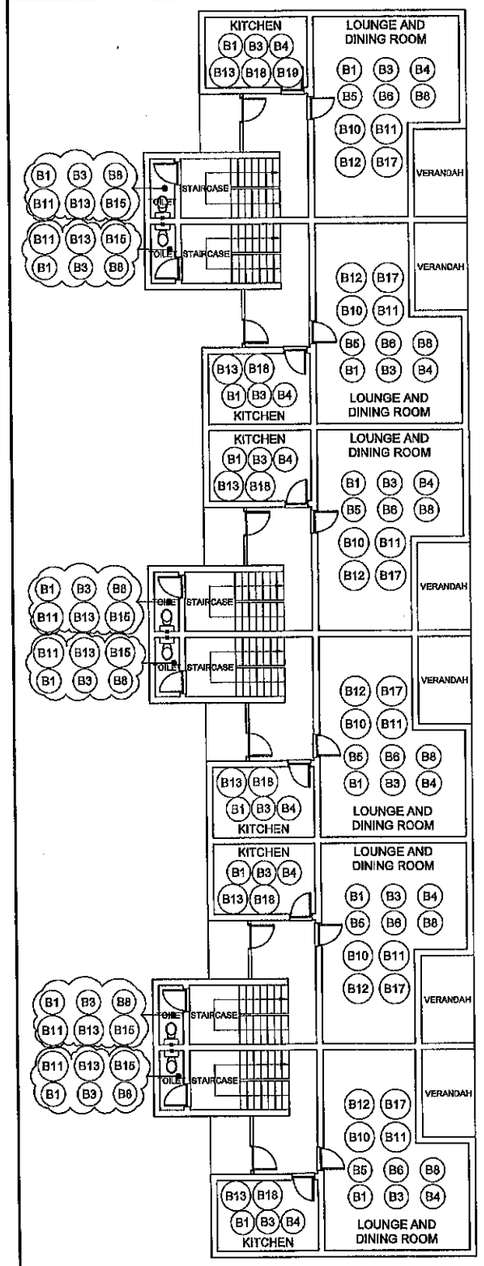

HOUSING QUARTERS: GROUND FLOOR
1 : 100

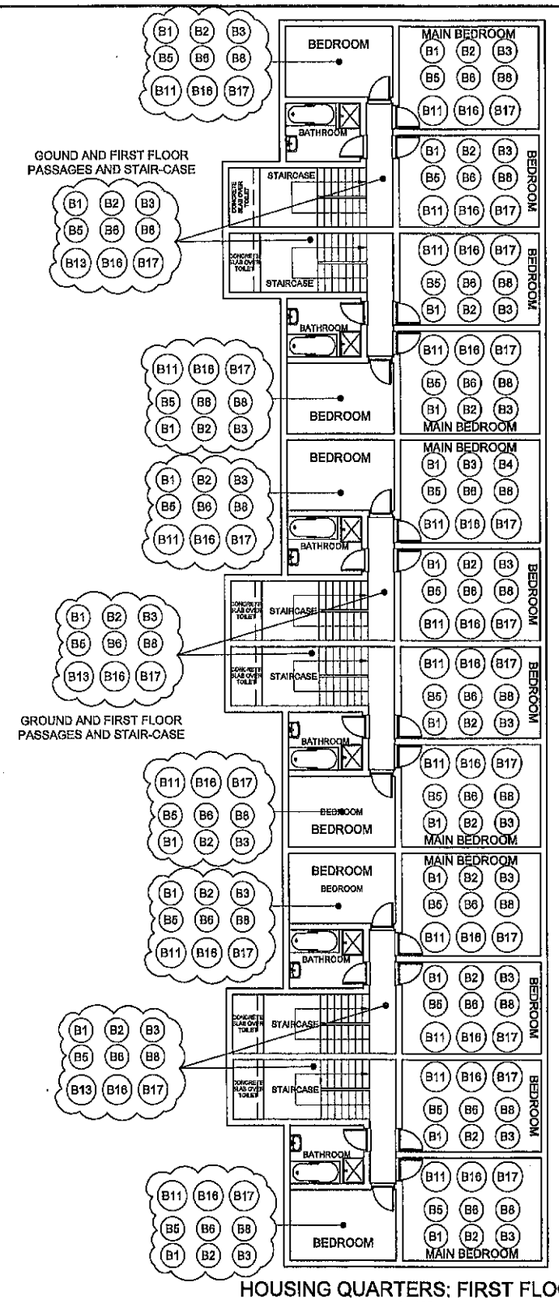

HOUSING QUARTERS: FIRST FLOOR
1 : 100

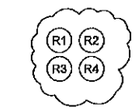

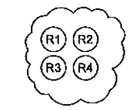

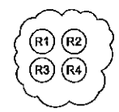

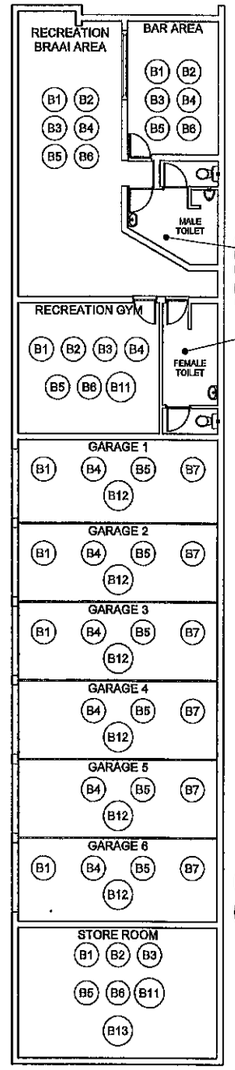

HOUSING QUARTERS: GARAGE, STORES AND RECREACTION AREA
1 : 76

EXTERNAL BUILDING SCOPE OF WORKS

BE1 Replacement of rusted and dilapidated roof sheeting at all buildings with new concealed fixed roof sheeting or similar approved roof covering
BE2 Replace defective damaged timber truss elements, fascia and barge boards
BE3 Replace all rusted gutters and downpipes with seamless aluminium system
BE4 Clean external face brick facades

FENCING SCOPE

F1 Cut and trim trees on fence and at buildings.
F2 Service gate motor, gate sensors and replace standby battery pack.
F3 Provide waste bins for all the buildings.
F4 Clean the site and remove debris to dumping site.
F6 Replace Vibracrete with 1.2m diamond mesh fence.

BUILDING SCOPE

B1 Paint all previously painted surfaces
B2 Replace all damaged ceilings and rotten brandering
B3 Replace damaged doors and door lock sets
B4 Replace broken glazing
B5 Replace missing/damaged ironmongery
B6 Replace missing window stays and pegs
B7 Replace damaged roll-up garage doors
B8 Replacement of perished carpets and vinyl tiles with ceramic tiles

ROADS AND STORMWATER DRAINAGE SCOPE

R1 Localised surface repair on concrete surfaced roads and areas.
R2 Localised repairs of concrete paving damaged by tree roots.
R3 Storm water catch pits and gullies to be repaired and grids replaced.
R4 Replace and repair paving areas and make good by removing roots of trees.

BUILDING SCOPE

B9 Replace damaged vinyl tiles and/or ceramic tiles.
B10 Replace damaged blinds
B11 Remove and re-install tarnished vinyl tinting on windows of western façade
B12 Strip and remove all paint from steel grills, doors and frames and repaint
B13 Replace locksets to security gate at entrances
B14 Replace wall tiles in kitchen and bathrooms
B15 Replace towel rails
B16 Replace toilet roll holder
B17 Replace damaged cupboard doors, pull handles, catches and hinges
B18 Repair damp walls (water ingress as a result of roof leaks)
B19 Replace rusted sink kitchenette units, water damaged wall units and base units
B20 Replace wall tiles in kitchen area
B21 Replace all kitchen cupboards and sink units
B22 Replace timber doors at clothing and linen stores
B23 Install aluminium shower doors

No.	DATE	AMENDMENT	D.P.W.

Copyright vested in the South African Police Service

as built drawings

signed with full knowledge of SAPS Delegation Policy
Archive AS BUILT DRAWING RECORDS REQUIRED

name:
date:
professional registration no:

Sheet No | Sheet Size | Page Size
A1

SOUTH AFRICAN POLICE SERVICE
PROGRAM & PROJECT MANAGEMENT

SAPS DIVISION SCM
FACILITY MANAGEMENT
PRIVATE BAG X 264
PRETORIA
0001

TEL: 012 846 8939
FAX: 012 846 8782

Discipline
MULTIDISCIPLINARY

Service

APPOINTMENT OF A BUILD ENVIRONMENT PROFESSIONAL TO FULFILL THE ROLE OF A LEAD CONSULTANT:
PLANNED REPAIR AND MAINTENANCE PROJECT AT
THEUNISSEN POLICE STATION
(FREE STATE)

Tender number
Tender No. 19/1/9/1/33 TB (20)

Drawing title
SAPS THEUNISSEN
HOUSING QUARTERS & GARAGES:
BUILDING, ROAD ANS STORMWATER
DRAINAGE SCOPE OF WORKS

Revision(s) | Designed
Scale: 1 : 100 (A1 SHEET) | Drawn: F RAAYMAN
Date: SEPTEMBER 2023 | Signature: J GROUBELAAR
Drawing number

THS/S2/BS-004

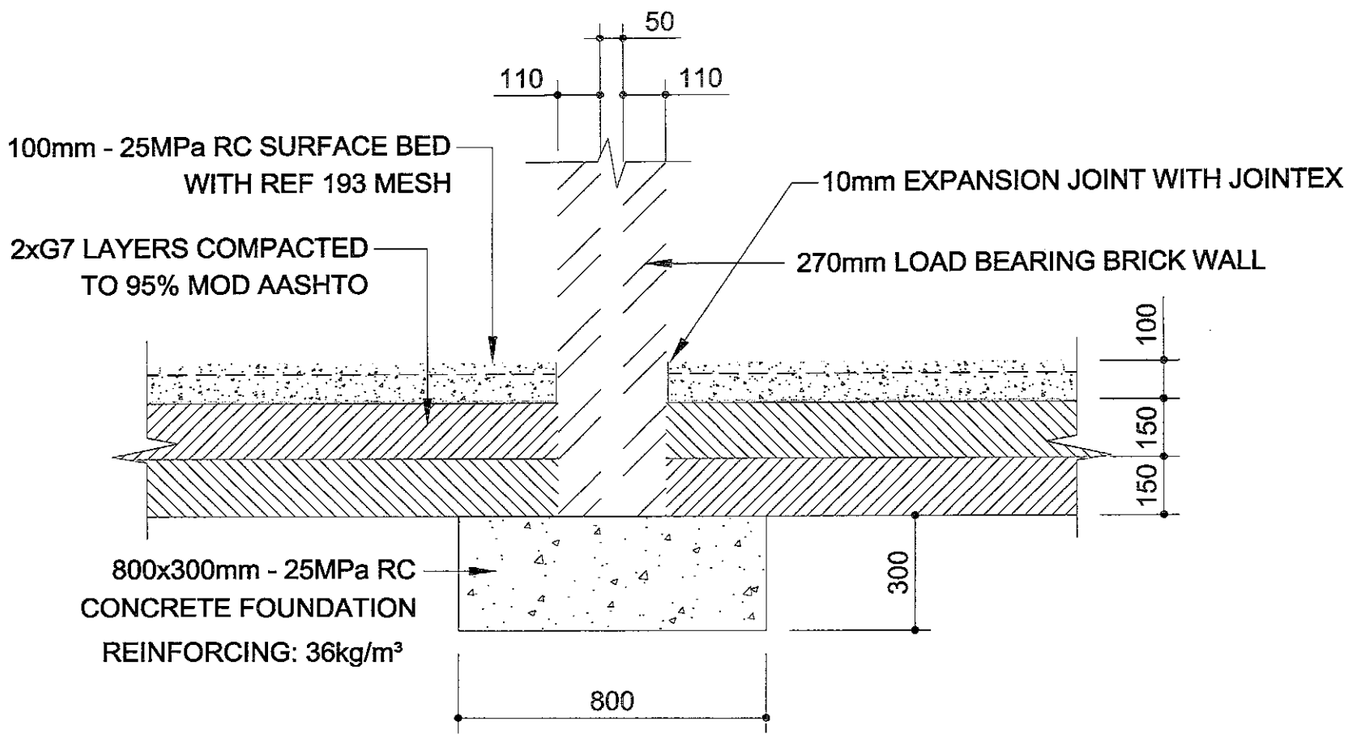

TYPICAL FOUNDATION SECTION: 270mm CAVITY BRICK WALL
SCALE 1:20

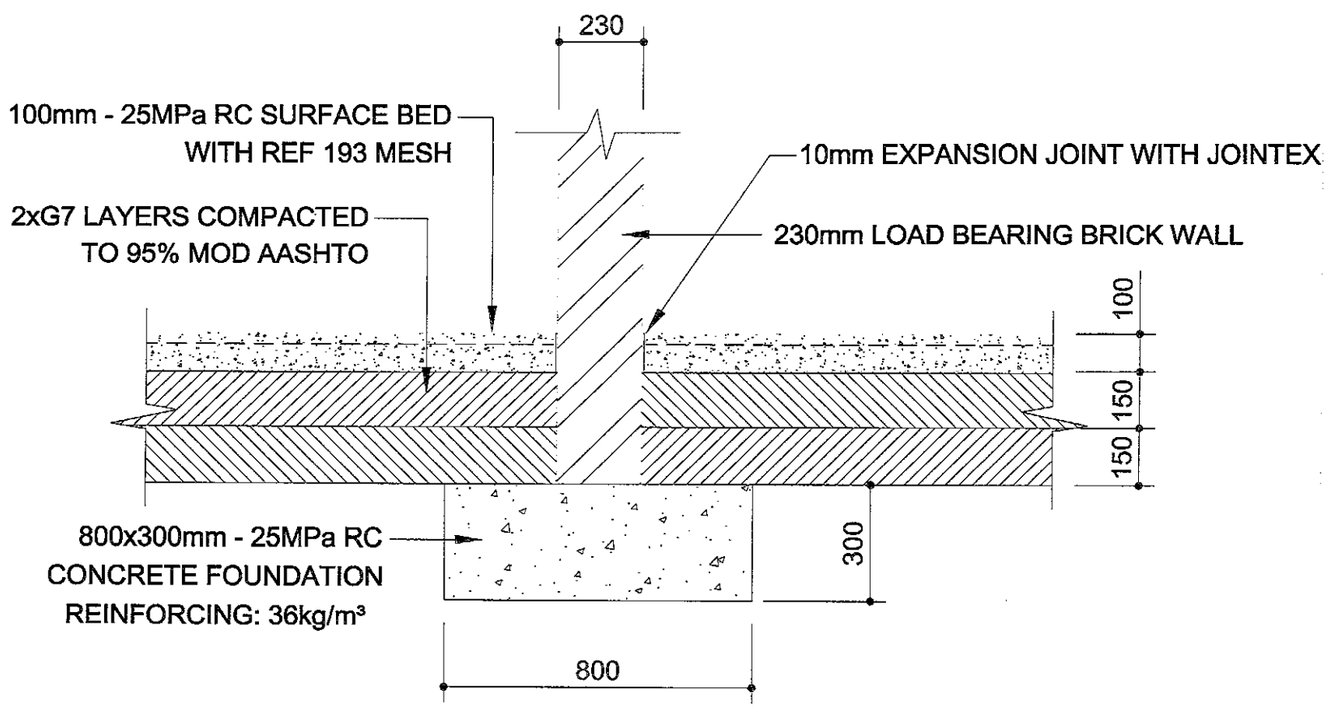

TYPICAL FOUNDATION SECTION: 230mm BRICK WALL
SCALE 1:20

KLIENT CLIENT

SAPS THEUNISSEN
ADMINISTRASTION, SUPPORT
AND CELL BLOCK GROUND FLOOR
AND FIRTST FLOOR PLAN

THS/S2/BS-005

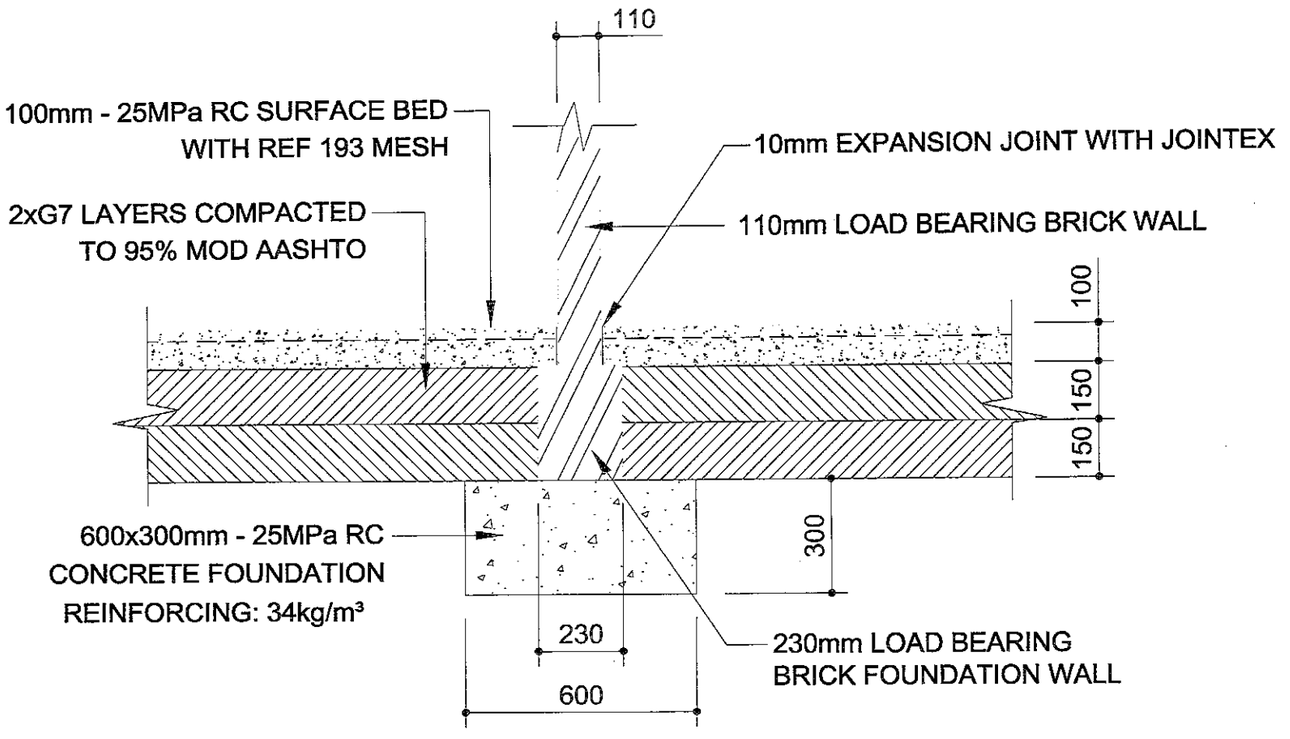

TYPICAL FOUNDATION SECTION: 110mm BRICK WALL
SCALE 1:20

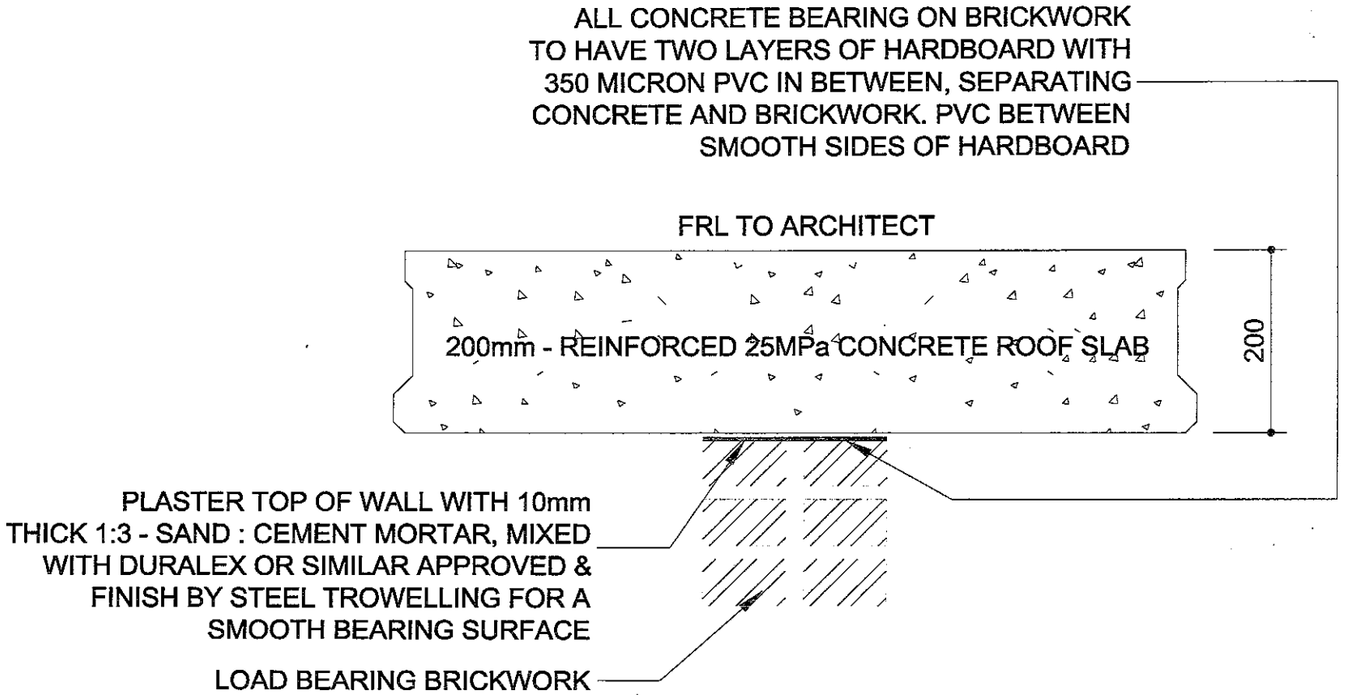

TYPICAL DETAIL: CONCRETE ON BRICK SUPPORT
N.T.S.

KLIENT CLIENT

SAPS THEUNISSEN
ADMINISTRASTION, SUPPORT
AND CELL BLOCK GROUND FLOOR
AND FIRTST FLOOR PLAN

THS/S2/BS-006

EXPANSION JOINT NOTE:

PROVIDE EXPANSION JOINTS IN 3m x 3m PANELS
TWO SIDES TO BE KEY JOINTS TO DETAIL
TWO SIDES TO BE SAW JOINTS TO DETAIL
POLYSULPHIDE WATERPROOF SEALANT TO JOINTS

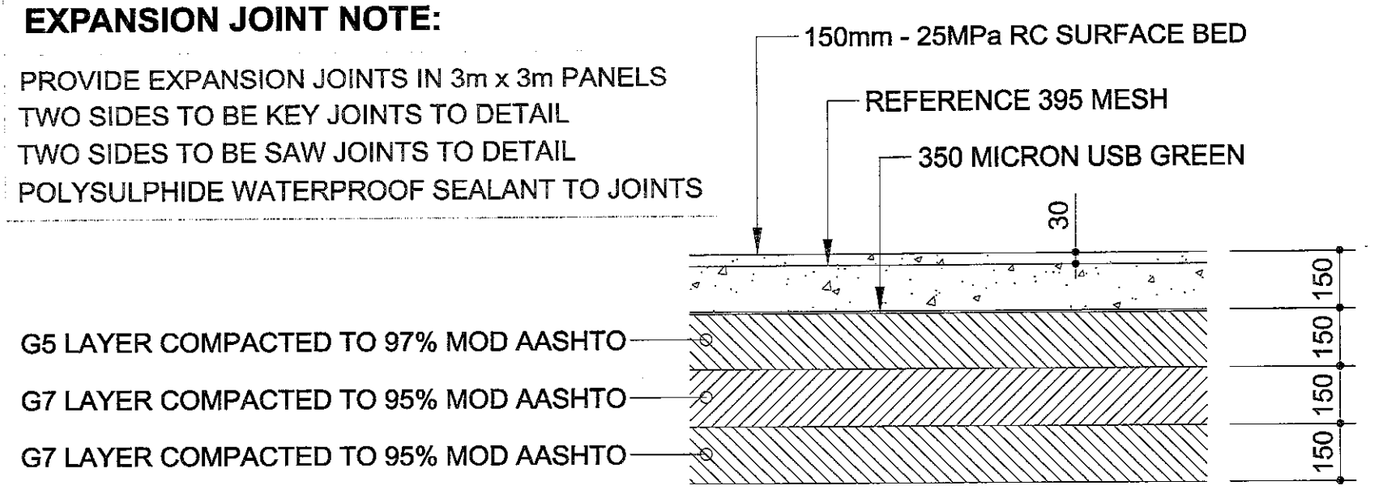

TYPICAL KITCHEN SURFACE BED DETAIL
N.T.S.

JOINTS TO BE SEALED WITH WATERPROOF POLYSULPHIDE JOINT SEALANT

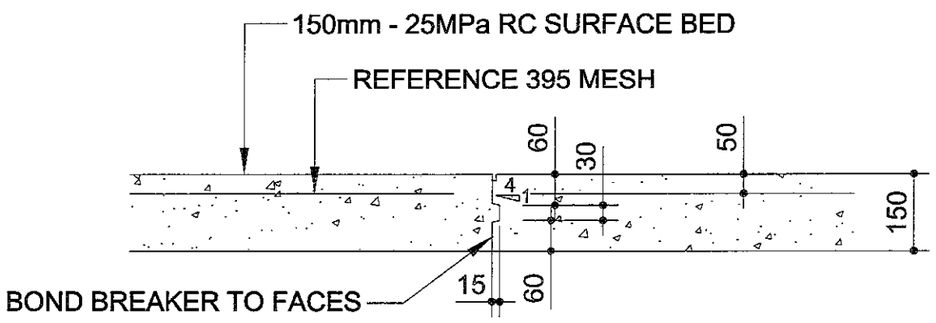

KEYED JOINT DETAIL
N.T.S.

JOINTS TO BE SEALED WITH WATERPROOF POLYSULPHIDE JOINT SEALANT

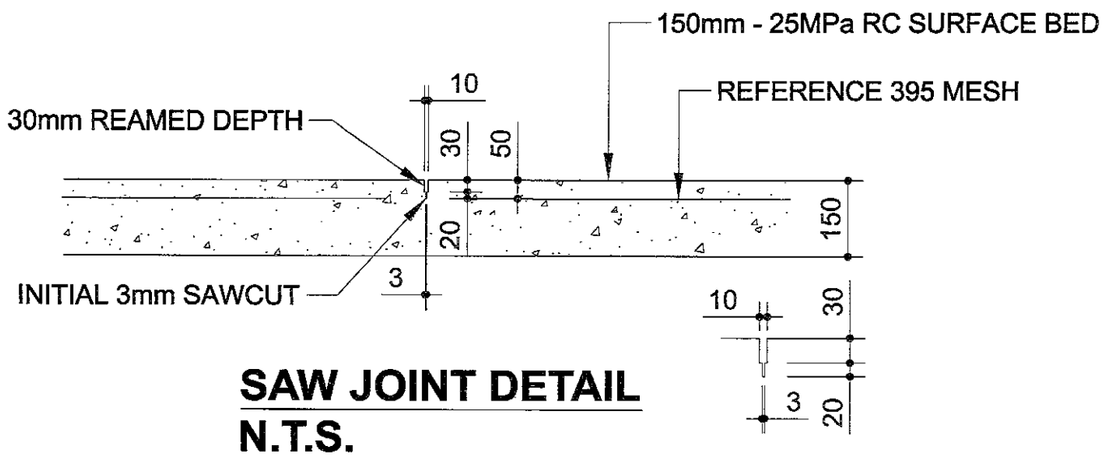

SAW JOINT DETAIL
N.T.S.

KLIENT CLIENT

SAPS THEUNISSEN
ADMINISTRASTION, SUPPORT
AND CELL BLOCK GROUND FLOOR
AND FIRTST FLOOR PLAN

THS/S2/BS-007

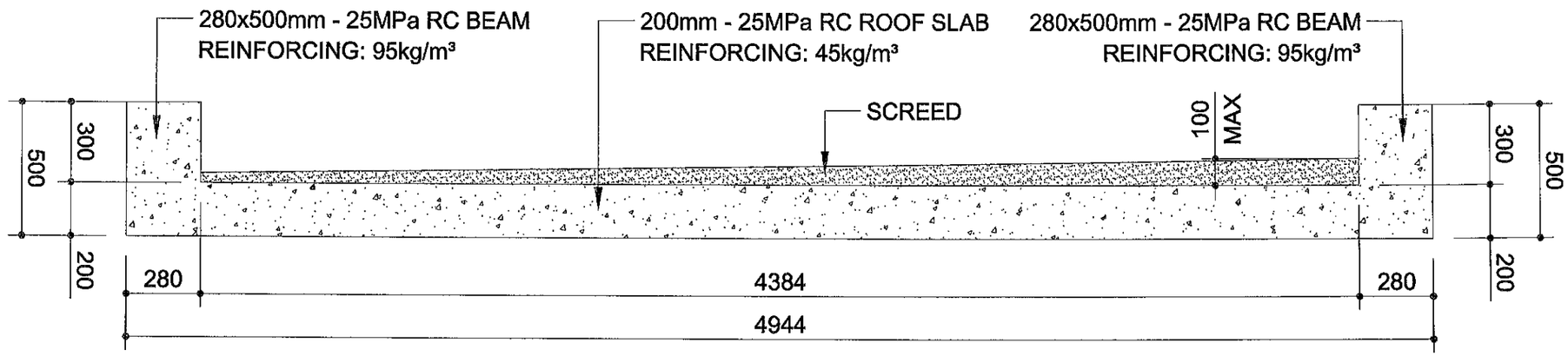

TYPICAL CONCRETE ROOF SLAB DETAIL A
N.T.S.

STRUCTURAL ROOF SCREED TO FALL & TO FULL BORE OUTLETS APPROVED WATERPROOFING AS PER SPECIALIST

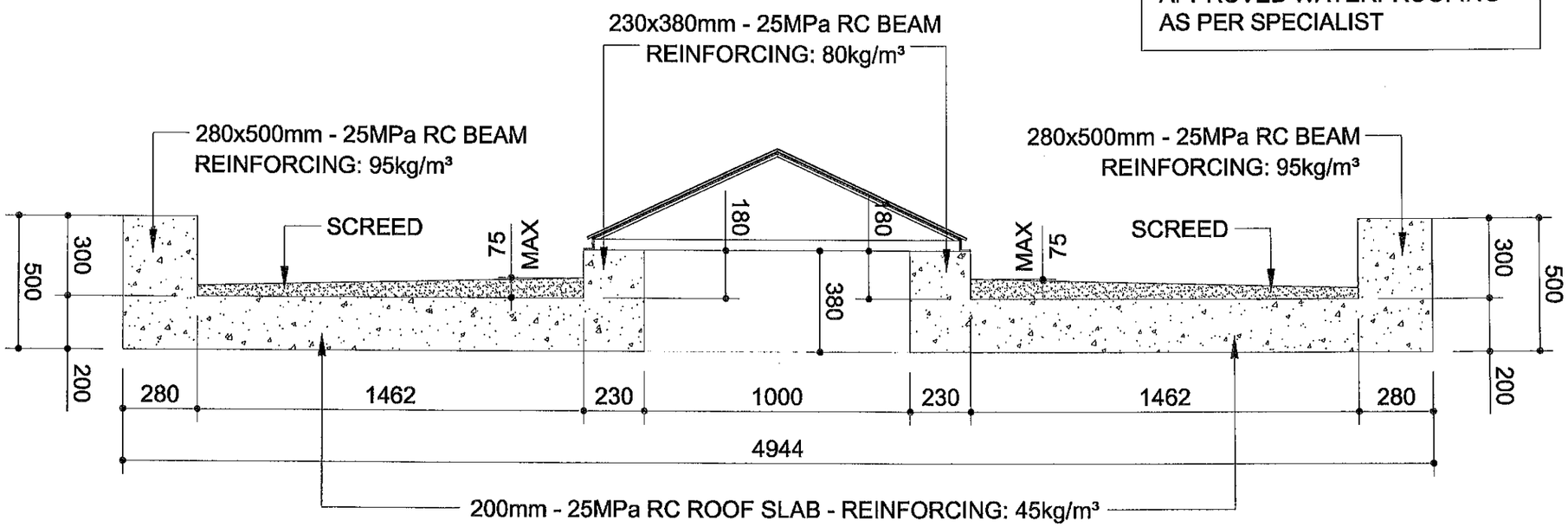

TYPICAL CONCRETE ROOF SLAB DETAIL B
N.T.S.

SAPS THEUNISSEN
ADMINISTRASTION, SUPPORT
AND CELL BLOCK GROUND FLOOR
AND FIRTST FLOOR PLAN

THS/S2/BS-008

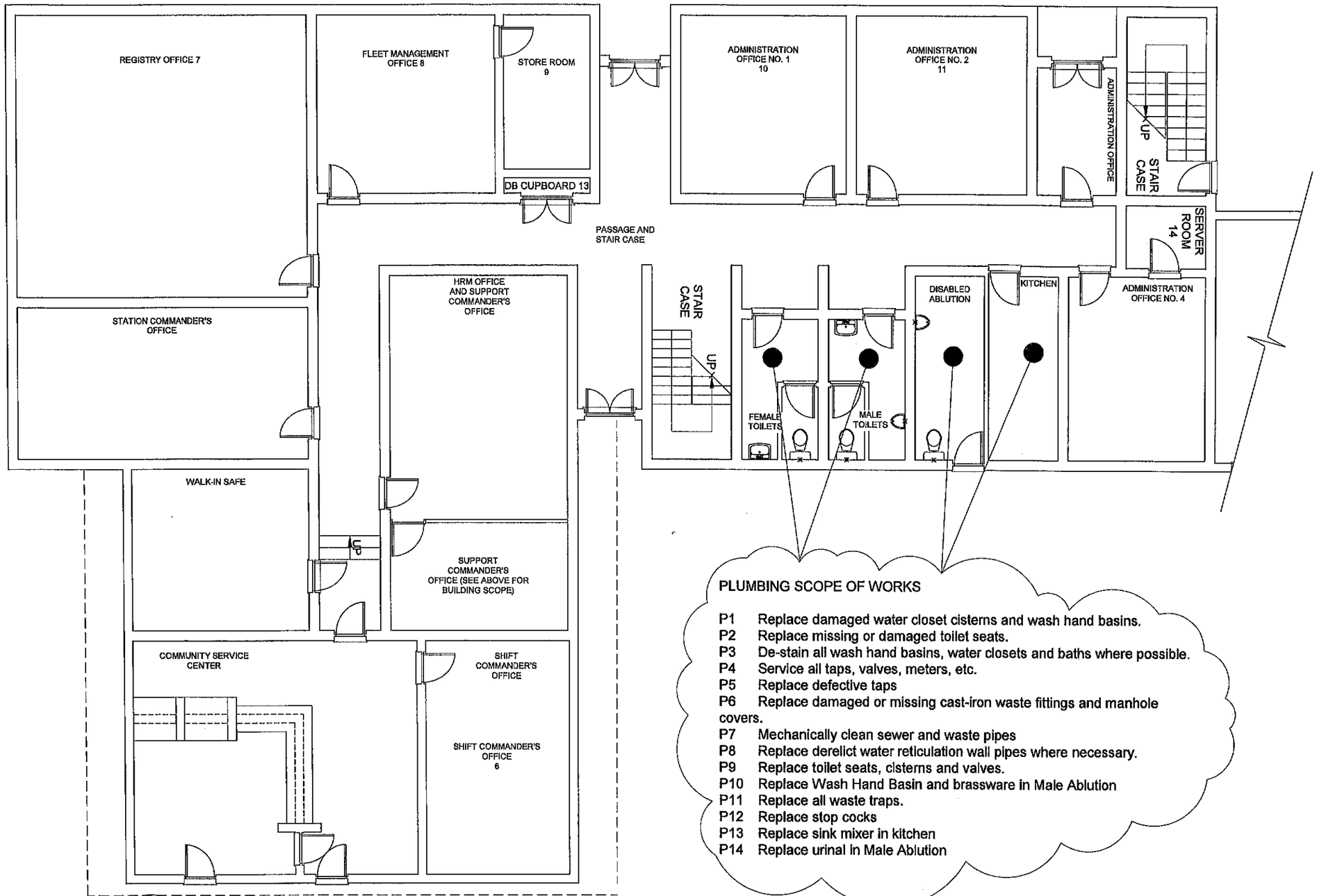

PLUMBING SCOPE OF WORKS

P1 Replace damaged water closet cisterns and wash hand basins.
P2 Replace missing or damaged toilet seats.
P3 De-stain all wash hand basins, water closets and baths where possible.
P4 Service all taps, valves, meters, etc.
P5 Replace defective taps
P6 Replace damaged or missing cast-iron waste fittings and manhole covers.
P7 Mechanically clean sewer and waste pipes
P8 Replace derelict water reticulation wall pipes where necessary.
P9 Replace toilet seats, cisterns and valves.
P10 Replace Wash Hand Basin and brassware in Male Ablution
P11 Replace all waste traps.
P12 Replace stop cocks
P13 Replace sink mixer in kitchen
P14 Replace urinal in Male Ablution

EXTERNAL WATER AND SEWER SCOPE

PE1 Inspect and repair underground water distribution pipes where required.
PE2 Service valves and pressure pumps
PE3 Installation of water meters at all the buildings for consumption audit.
PE4 Inspect and clean current water storage tanks
PE5 Install 10kℓ water storage tank parallel to existing to achieve legislatory requirements
PE6 Repair pipe work.
PE7 Cleaning of manholes.
PE8 Repair damaged gullies and gratings.

ADMINISTRATION AND SUPPORT OFFICE BLOCK GROUND FLOOR PLUMBING SCOPE OF WORKS

1 : 50

No.	DATE	AMENDMENT	© P.W.

Copyright vests in the South African Police Service

as built drawings

SUBMIT AS BUILT DRAWINGS AT 2nd CERTIFICATE ISSUED
Archive AS BUILT DRAWING RECOMMENDATIE

name: _____

date: _____

professional registration: _____

Sheet No/Letter: A1

SOUTH AFRICAN POLICE SERVICE
PROGRAM & PROJECT MANAGEMENT

SAPS DIVISION SCM
FACILITY MANAGEMENT
PRIVATE BAG X 254
PRETORIA
0001

TEL: 012 846 6939
FAX: 012 846 8702

MULTIDISCIPLINARY

APPOINTMENT OF A BUILD ENVIRONMENT PROFESSIONAL TO FULFILL THE ROLE OF A LEAD CONSULTANT: PLANNED REPAIR AND MAINTENANCE PROJECT AT THEUNISSEN POLICE STATION (FREE STATE)

Tender Number: Tender No. 19/1/9/1/33 TB (20)

Drawing title: SAPS THEUNISSEN ADMINISTRASTION GROUND FLOOR: PLUMBING AND DRAINGE SCOPE OF WORKS

Drawing No: THS/S2/PD-001

Scale: 1 : 50 (A1 SHEET)

Drawn: F SAAYMAN

Date: SEPTEMBER 2023

Checked: J GROBBELAAR

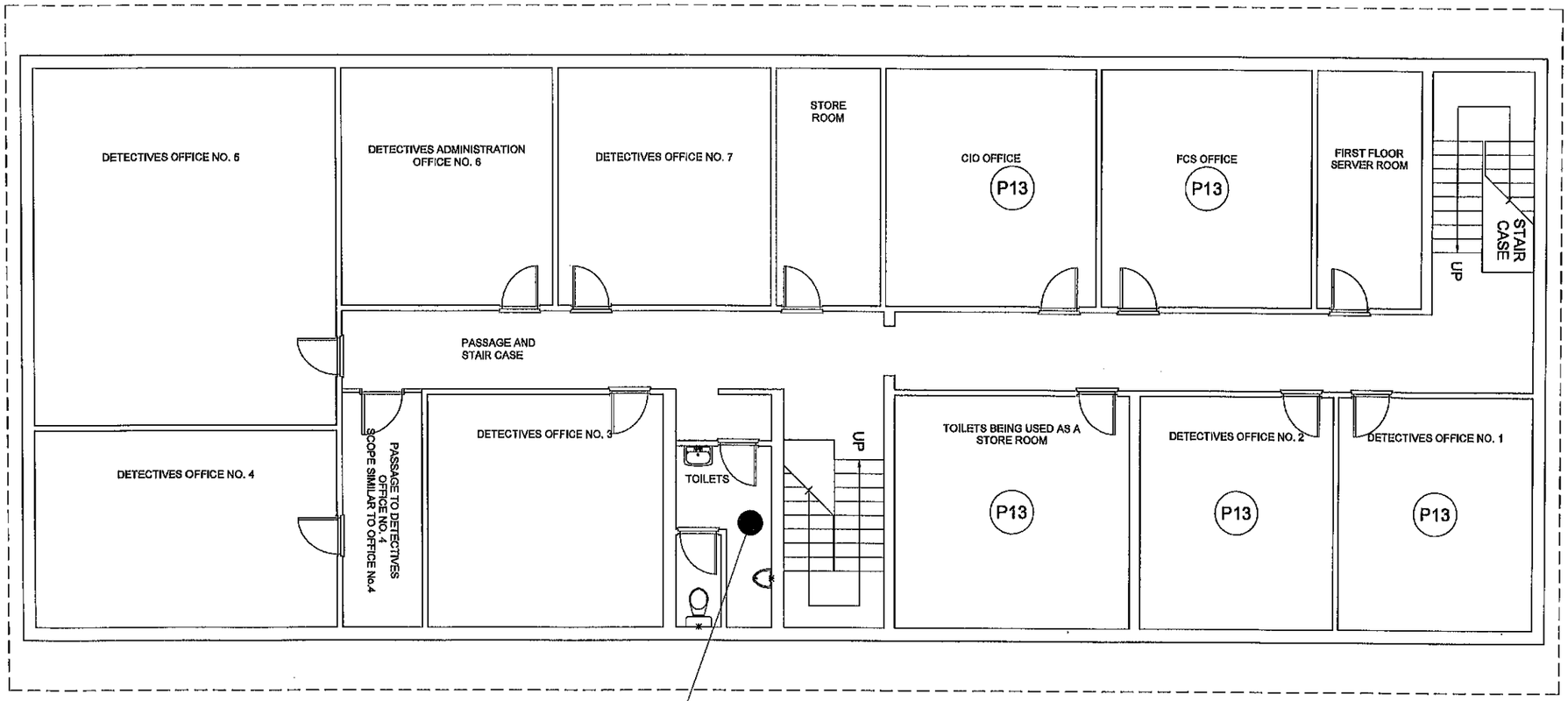

ADMINISTRATION AND SUPPORT
OFFICE BLOCK FIRST FLOOR
BUILDING SCOPE

1 : 60

PLUMBING SCOPE OF WORKS

- P1 Replace damaged water closet cisterns and wash hand basins.
- P2 Replace missing or damaged toilet seats.
- P3 De-stain all wash hand basins, water closets and baths where possible.
- P4 Service all taps, valves, meters, etc.
- P5 Replace defective taps
- P6 Replace damaged or missing cast-iron waste fittings and manhole covers.
- P7 Mechanically clean sewer and waste pipes
- P8 Replace derelict water reticulation wall pipes where necessary.
- P9 Replace toilet seats, cisterns and valves.
- P10 Replace Wash Hand Basin and brassware in Male Ablution
- P11 Replace all waste traps.
- P12 Replace stop cocks
- P13 De-commission of water reticulation in old "single quarters" and removal of sanitary fittings

EXTERNAL WATER AND SEWER SCOPE

- PE1 Inspect and repair underground water distribution pipes where required.
- PE2 Service valves and pressure pumps
- PE3 Installation of water meters at all the buildings for consumption audit.
- PE4 Inspect and clean current water storage tanks
- PE5 Install 10kℓ water storage tank parallel to existing to achieve legislatory requirements
- PE6 Repair pipe work.
- PE7 Cleaning of manholes.
- PE8 Repair damaged gullies and gratings.

No.	DATE	AMENDMENT	DRWN.

Copyright vests in the South African Police Service

DO NOT SCALE DRAWINGS
CHECK WITH SITE DRAWINGS AND SITE CONDITIONS BEFORE ANY WORK IS DONE
Archive AS BUILT DRAWINGS REQUIREMENTS

name:
date:
professional registration no.:

Grid line name
Page size
A1

SOUTH AFRICAN POLICE SERVICE
PROGRAM & PROJECT MANAGEMENT

SAPS DIVISION SCM
FACILITY MANAGEMENT
PRIVATE BAG X 264
PRETORIA
0001

TEL: 012 846 6639
FAX: 012 846 6762

Drawing number
S

Designed
MULTIDISCIPLINARY

Service
APPOINTMENT OF A BUILD ENVIRONMENT PROFESSIONAL TO FULFILL THE ROLE OF A LEAD CONSULTANT: PLANNED REPAIR AND MAINTENANCE PROJECT AT THEUNISSEN POLICE STATION (FREE STATE)

Tender number
Tender No. 19/1/9/1/33 TB (20)

Drawing title
SAPS THEUNISSEN
ADMINISTRASTION FIRST FLOOR:
PLUMBING AND DRAINAGE
SCOPE OF WORKS

Drawn by
Designed
Scale
1 : 60 (A1 SHEET)
Drawn
F BAAYMAN
Date
SEPTEMBER 2023
Checked
J GROBBELAAR
Drawing number
THS/S2/PD-002

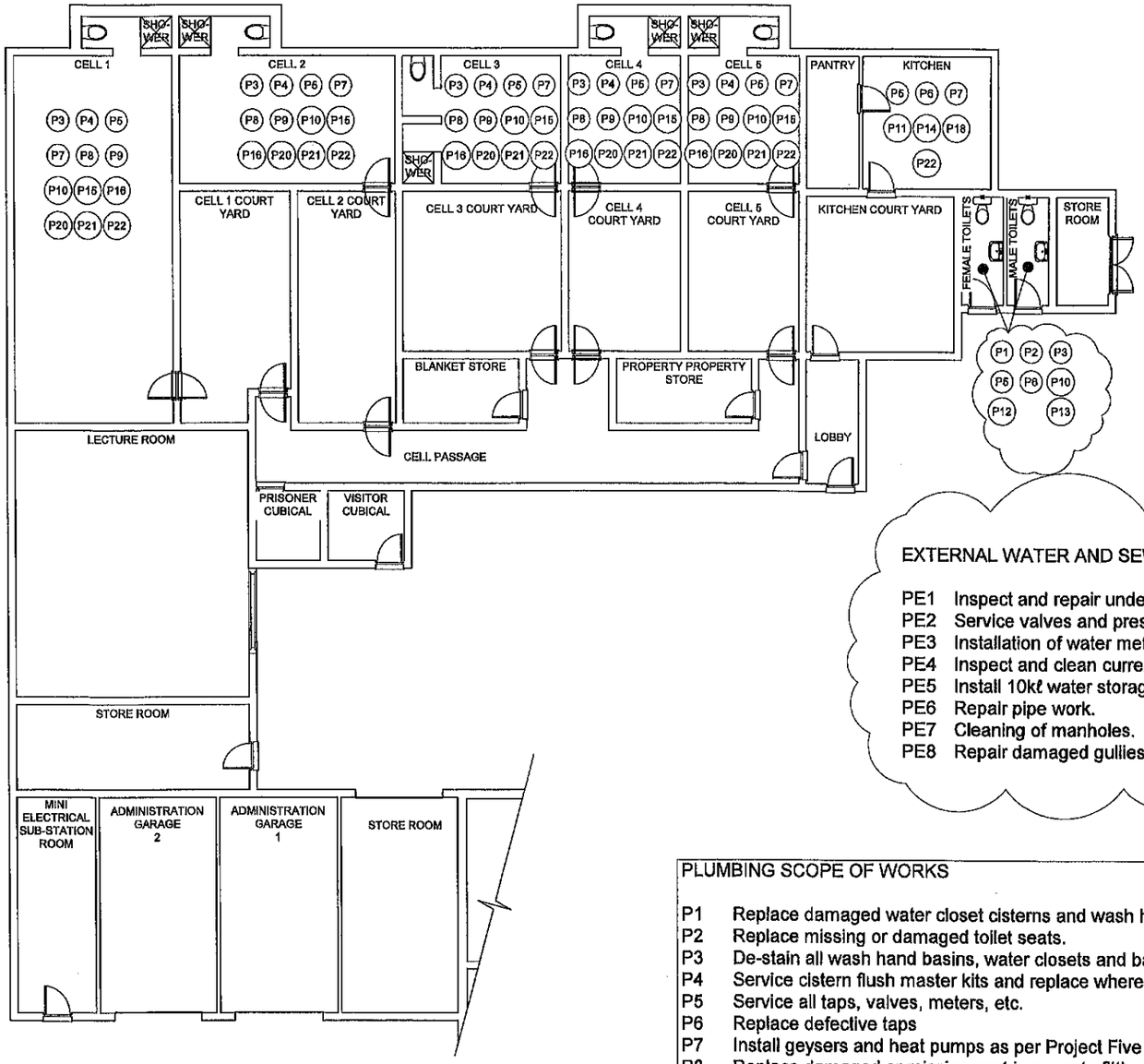

GARAGES, LECTURE ROOM, CELL BLOCK AND PUBLIC ABLUTIONS PLUMBING SCOPE

1 : 75

EXTERNAL WATER AND SEWER SCOPE

PE1 Inspect and repair underground water distribution pipes where required.
PE2 Service valves and pressure pumps
PE3 Installation of water meters at all the buildings for consumption audit.
PE4 Inspect and clean current water storage tanks
PE5 Install 10kℓ water storage tank parallel to existing to achieve legislatory requirements
PE6 Repair pipe work.
PE7 Cleaning of manholes.
PE8 Repair damaged gullies and gratings.

PLUMBING SCOPE OF WORKS

P1 Replace damaged water closet cisterns and wash hand basins.
P2 Replace missing or damaged toilet seats.
P3 De-stain all wash hand basins, water closets and baths where possible.
P4 Service cistern flush master kits and replace where necessary.
P5 Service all taps, valves, meters, etc.
P6 Replace defective taps
P7 Install geysers and heat pumps as per Project Five Star 2012
P8 Replace damaged or missing cast-iron waste fittings and manhole covers.
P9 Mechanically clean sewer and waste pipes
P10 Replace derelict water reticulation wall pipes where necessary.
P11 Replace sink mixer in kitchen
P12 Replace toilet seats, cisterns and valves.
P13 Replace Wash Hand Basin and brassware in Male Ablution
P14 Replace all waste traps.
P15 Replace flush masters to sanitary ware
P16 Replace vandal proof shower heads as existing has been discontinued.
P17 Replace stop cocks
P18 Replace sink mixer and P-trap waste in Cell Block Kitchen
P19 Replace shower rose
P20 Replace recessed basin drinking fountain
P21 Replace current HWC's with 200ℓ holding vessel (HWC) complete with heat pumps
P22 Destain and clean stainless-steel sanitary ware

No.	DATE	AMENDMENT	S/PW.

Copyright vests in the South African Police Service

as built drawings

WARNING: MUST BE BUILT ON SITE BEFORE CONSTRUCTION STARTS
Architect AS BUILT DRAWINGS REQUIRED BEFORE

name:
date:
professional registration no.:

Unit size: A1 Paper size: A1

SOUTH AFRICAN POLICE SERVICE
PROGRAM & PROJECT MANAGEMENT

SAPS DIVISION SCM
FACILITY MANAGEMENT
PRIVATE BAG X 264
PRETORIA
0001

TEL: 012 846 8939
FAX: 012 846 8782

consultant

S

Discipline: MULTIDISCIPLINARY

Service:

APPOINTMENT OF A BUILD ENVIRONMENT PROFESSIONAL TO FULFILL THE ROLE OF A LEAD CONSULTANT: PLANNED REPAIR AND MAINTENANCE PROJECT AT THEUNISSEN POLICE STATION (FREE STATE)

Tender number: Tender No. 19/1/9/1/33 TB (20)

Drawing title: SAPS THEUNISSEN SUPPORT, GARAGES AND CELL BLOCK GROUND FLOOR: PLUMBING AND DRAINAGE SCOPE OF WORKS

Division no: Drawing no:

Scale: 1 : 75 (A1 SHEET) Drawn: F SAAYMAN

Date: SEPTEMBER 2020 Checked: J GROBBELAAR

Drawing number: THS/S2/PD-003

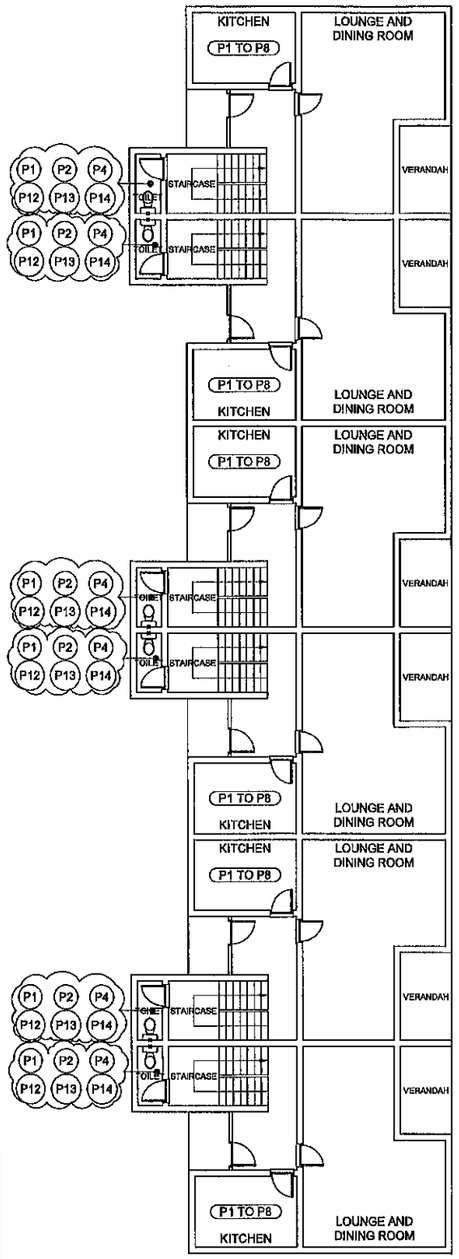

HOUSING QUARTERS: GROUND FLOOR
1 : 100

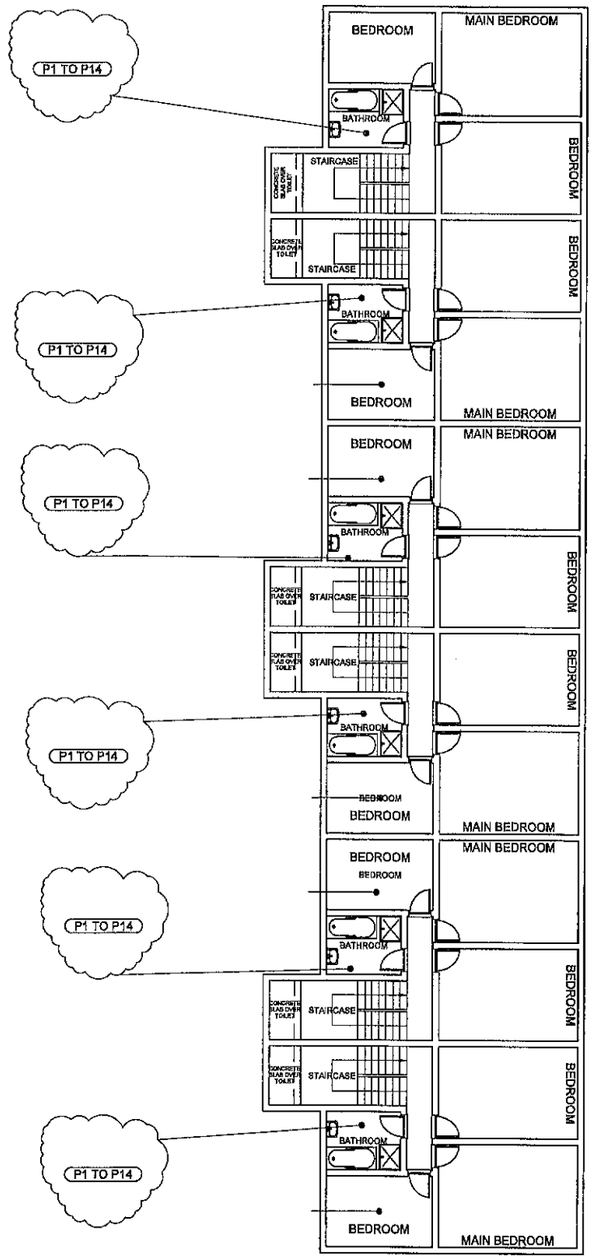

HOUSING QUARTERS: FIRST FLOOR
1 : 100

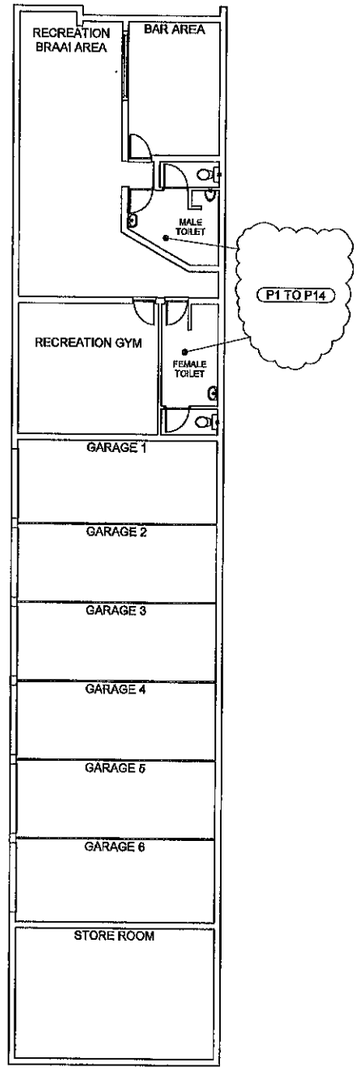

HOUSING QUARTERS: GARAGE, STORES AND RECREACTION AREA
1 : 76

EXTERNAL WATER AND SEWER SCOPE

- PE1 Inspect and repair underground water distribution pipes where required.
- PE2 Service valves and pressure pumps
- PE3 Installation of water meters at all the buildings for consumption audit.
- PE4 Inspect and clean current water storage tanks
- PE5 Repair pipe work.
- PE6 Cleaning of manholes.
- PE7 Repair damaged gullies and gratings.
- PE8 Water meters and water connections to living quarters to be serviced

PLUMBING SCOPE OF WORKS

- P1 Service all taps, valves, meters, etc.
- P2 Replace defective taps
- P3 Service and clean geysers where feasible.
- P4 Replace damaged or missing cast-iron waste fittings and manhole covers.
- P5 Mechanically clean sewer and waste pipes
- P6 Replace derelict water reticulation wall pipes where necessary.
- P7 Replace sink mixer in kitchen
- P8 Replace 150lt geyser with all valves and connections
- P9 Replace broken valve and meter boxes
- P10 Replace water meters and damaged boxes.
- P11 Replace gulley precast concrete top
- P12 De-stain all wash hand basins, water closets and baths where possible.
- P13 Replace damaged water closet cisterns and wash hand basins.
- P14 Replace missing or damaged toilet seats.

No.	DATE	AMENDMENT	D.P.W.

Copyright reserved in the South African Police Service

as built drawings

AS BUILT DRAWINGS
Archive AS BUILT DRAWING REQUIREMENTS

name:
date:
professional registration no:

A1

SOUTH AFRICAN POLICE SERVICE
PROGRAM & PROJECT MANAGEMENT

SAPS DIVISION SCM
FACILITY MANAGEMENT
PRIVATE BAG X 264
PRETORIA
0001

TEL: 012 846 6939
FAX: 012 846 6962

MULTIDISCIPLINARY

APPOINTMENT OF A BUILD ENVIRONMENT PROFESSIONAL TO FULFILL THE ROLE OF A LEAD CONSULTANT: PLANNED REPAIR AND MAINTENANCE PROJECT AT THEUNISSEN POLICE STATION (FREE STATE)

Tender Number: Tender No. 19/1/8/1/33 TB (20)

Drawing title: SAPS THEUNISSEN HOUSING QUARTERS & GARAGES: PLUMBING AND DRAINAGE SCOPE OF WORKS

Scale: 1 : 100 (A1 SHEET)
Drawn: F SAAYMAN
Date: SEPTEMBER 2023
Checked: J GROBBELAAR

Drawing number: THS/S2/PD-004

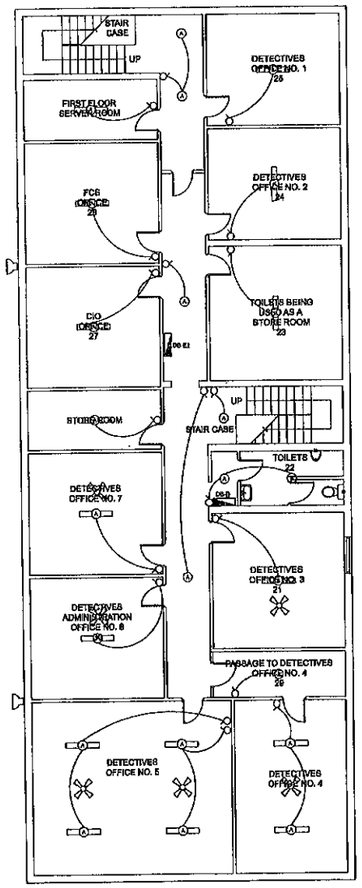

ADMINISTRATION AND SUPPORT
OFFICE BLOCK FIRST FLOOR

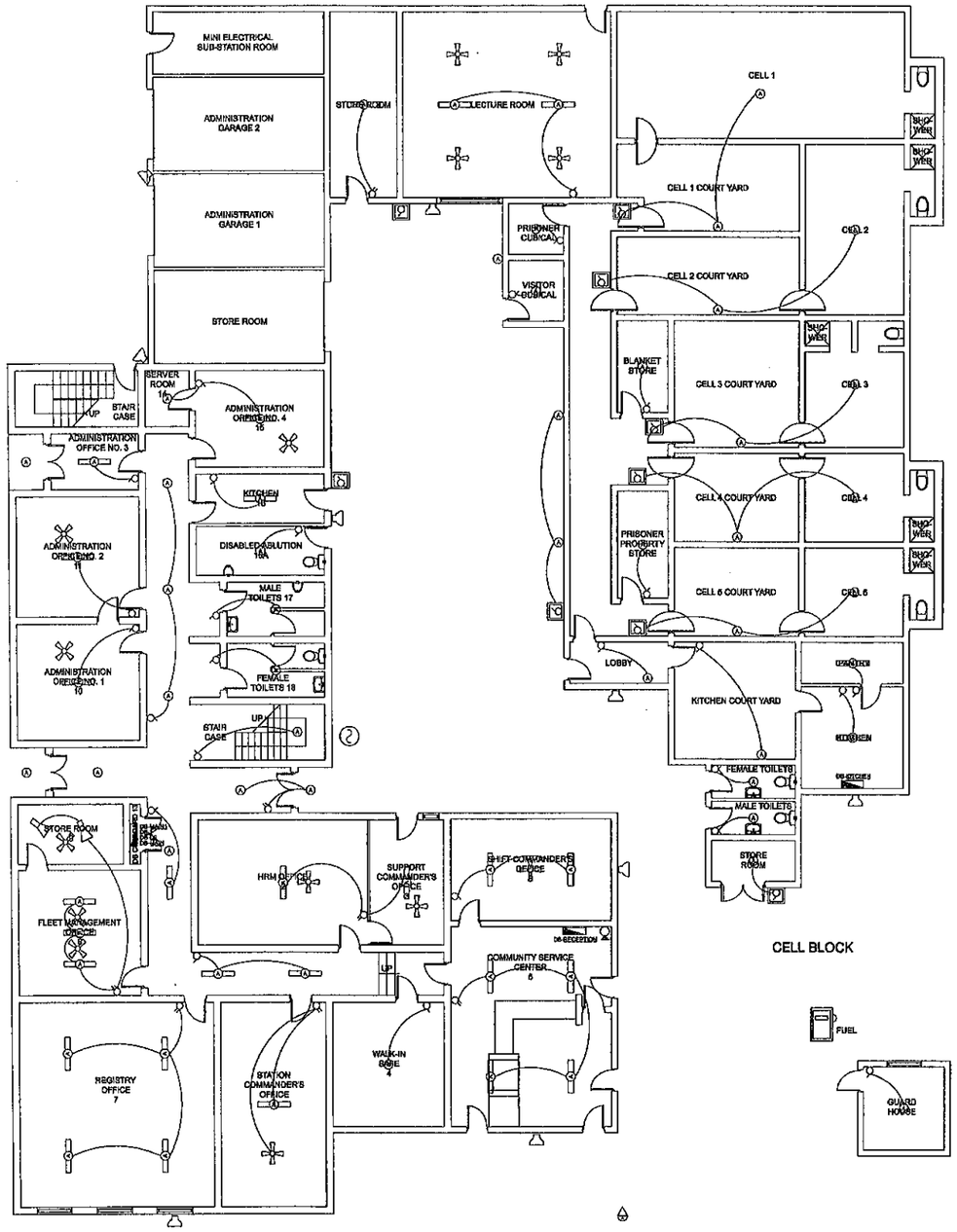

ADMINISTRATION AND SUPPORT
OFFICE BLOCK GROUND FLOOR

LEGEND	
SYMBOL	DESCRIPTION
	2 TUBE FLUORESCENT FITTING
	ROUND BULKHEAD
	POLICE LIGHT
	LED FLOOD LIGHT
	SPOTLIGHT
	CEILING FAN
	RING PUSH BUTTON
	SINGLE LEVER ONE WAY SWITCH
	SINGLE LEVER TWO WAY SWITCH
	IP 44 WEATHER PROOF SINGLE LEVER SWITCH
	GENERATOR

NO.	DATE	REVISION

Copyright vests in the South African Police Service

discipline
ELECTRICAL

service
SAPS THEUNISSEN
ADMINISTRASTION, SUPPORT
AND CELL BLOCK GROUND FLOOR
AND FIRTST FLOOR PLAN

WCS number

drawing title
LIGHTING LAYOUT

ref. no.		designed	AEL
scale	1 : 100 (A1)	drawn	AM
date	SEP 2023	checked	AEL
type number			
revision no.	0		
drawing number	THS/S4/EE-001		

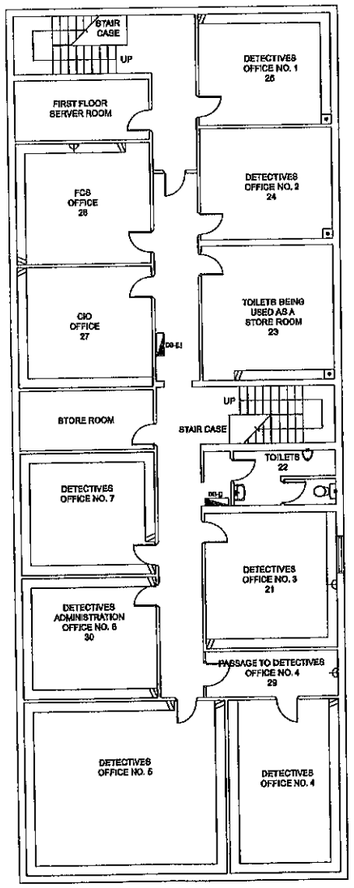

ADMINISTRATION AND SUPPORT
OFFICE BLOCK FIRST FLOOR

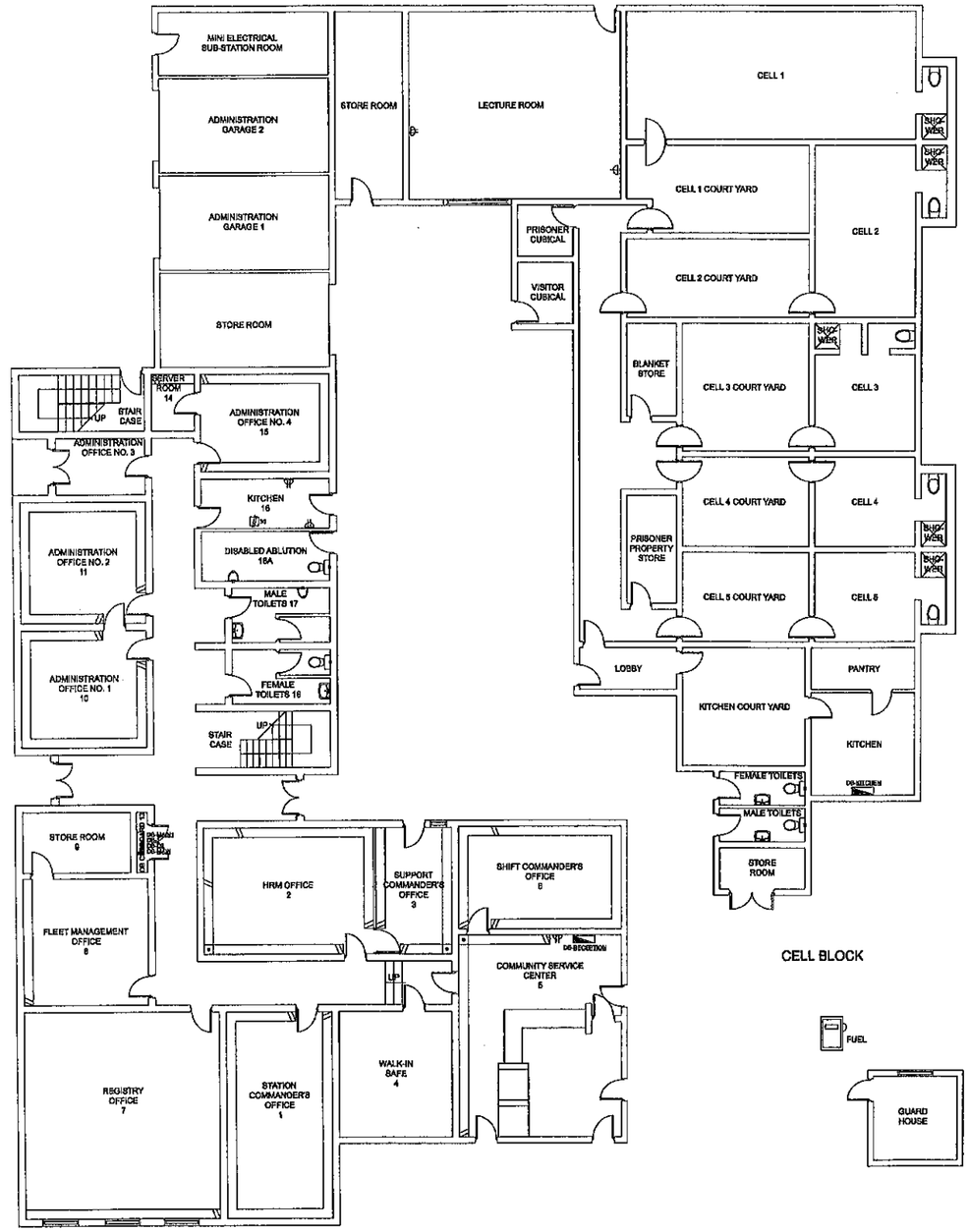

ADMINISTRATION AND SUPPORT
OFFICE BLOCK GROUND FLOOR

LEGEND	
SYMBOL	DESCRIPTION

NO.	DATE	REVISION

Copyright vests in the South African Police Service

discipline
ELECTRICAL

service
SAPS THEUNISSEN
ADMINISTRASTION, SUPPORT
AND CELL BLOCK GROUND FLOOR
AND FIRTST FLOOR PLAN

WCS number

drawing title
SOCKET LAYOUT

ref. no.		designed	AEL
scale	1 : 100 (A1)	drawn	AM
date	SEP 2023	checked	AEL
type number			
revision no.		0	
drawing number		THS/SA/EE-002	

100kVA GENERATOR

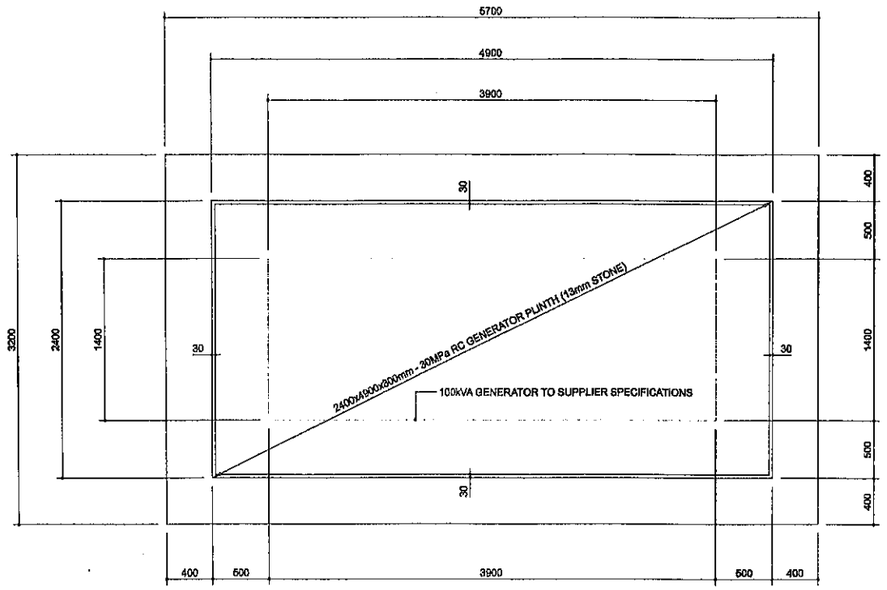

GENERATOR PLINTH LAYOUT PLAN
1:25

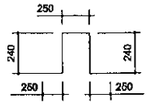

STOOLS - CUT & BEND

STOOLS	1	12	R10	1500	12	A	83	250	240	250			

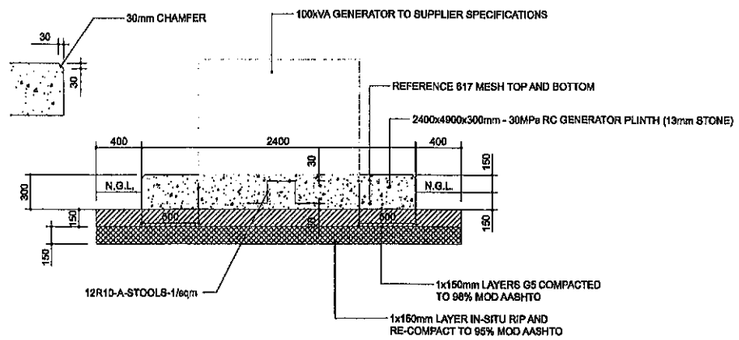

GENERATOR PLINTH SECTIONAL ELEVATION
1:25

NOTES

CONSTRUCTION DRAWING

NR. NO	DATUM DATE	PARAF INITIALS	BESKRYWING DESCRIPTION

WYSIGINGS REVISIONS

KONSULTANT CONSULTANT

KLIENT CLIENT

PROJEK PROJECT

SAPS THEUNISSEN
ADMINISTRASTION, SUPPORT
AND CELL BLOCK GROUND FLOOR
AND FIRTST FLOOR PLAN

TITEL TITLE

TYPICAL GENERATOR PLINTH

SKAAL SCALE	KONTRAK Nr. CONTRACT No.	
AS SHOWN	WCS 048590	
GETEKEN DRAWN: RP	ONTWERP DESIGNED: RP	
DATUM DATE: JANUARY 2020	GOEDGEKEUR APPROVED: AEL	
TEKENING NR. DRAWING NO. THS/S4/EE-003	VERWIREK REV. 0	

A1 ISO

Theunissen DWG'S Working Checks.dgn 19-Sep-23 2:17:56 PM

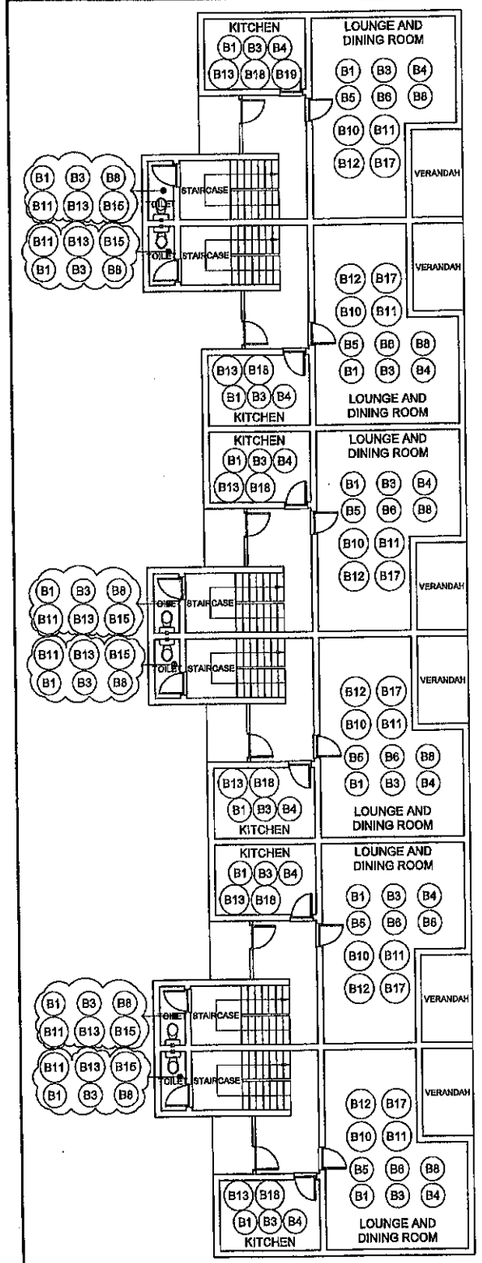

HOUSING QUARTERS: GROUND FLOOR
1 : 100

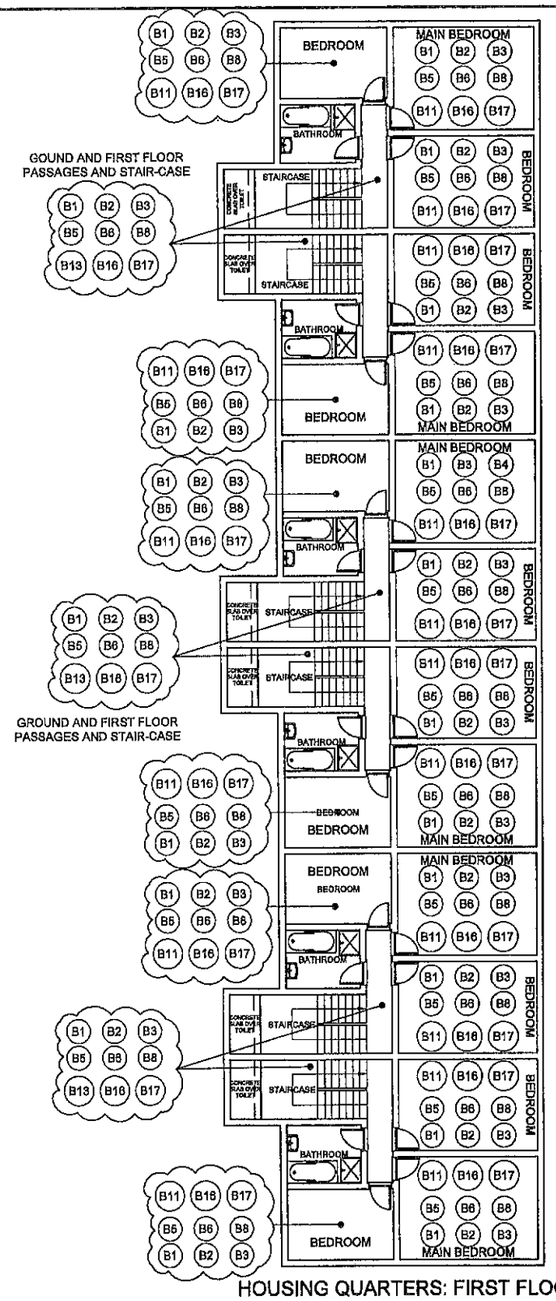

HOUSING QUARTERS: FIRST FLOOR
1 : 100

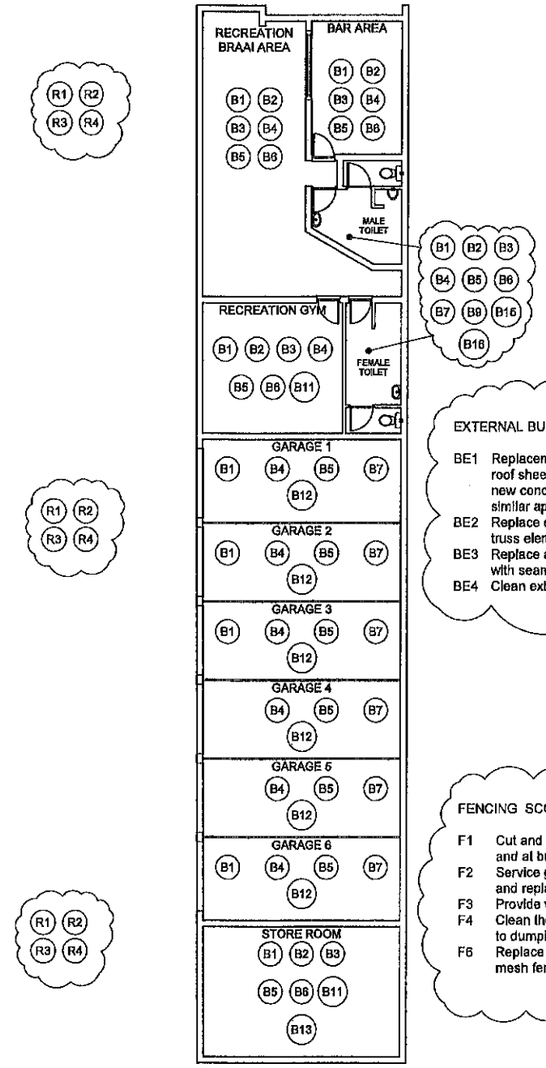

HOUSING QUARTERS: GARAGE, STORES AND RECREACTION AREA
1 : 75

EXTERNAL BUILDING SCOPE OF WORKS

BE1 Replacement of rusted and dilapidated roof sheeting at all buildings with new concealed fixed roof sheeting or similar approved roof covering
BE2 Replace defective damaged timber truss elements, fascia and barge boards
BE3 Replace all rusted gutters and downpipes with seamless aluminium system
BE4 Clean external face brick facades

FENCING SCOPE

F1 Cut and trim trees on fence and at buildings.
F2 Service gate motor, gate sensors and replace standby battery pack.
F3 Provide waste bins for all the buildings.
F4 Clean the site and remove debris to dumping site.
F6 Replace Vibracrete with 1.2m diamond mesh fence.

BUILDING SCOPE

B1 Paint all previously painted surfaces
B2 Replace all damaged ceilings and rotten brandering
B3 Replace damaged doors and door lock sets
B4 Replace broken glazing
B5 Replace missing/damaged ironmongery
B6 Replace missing window stays and pegs
B7 Replace damaged roll-up garage doors
B8 Replacement of perished carpets and vinyl tiles with ceramic tiles

ROADS AND STORMWATER DRAINAGE SCOPE

R1 Localised surface repair on concrete surfaced roads and areas.
R2 Localised repairs of concrete paving damaged by tree roots.
R3 Storm water catch pits and gullies to be repaired and grids replaced.
R4 Replace and repair paving areas and make good by removing roots of trees.

BUILDING SCOPE

B9 Replace damaged vinyl tiles and/or ceramic tiles.
B10 Replace damaged blinds
B11 Remove and re-install tarnished vinyl tinting on windows of western façade
B12 Strip and remove all paint from steel grills, doors and frames and repaint
B13 Replace locksets to security gate at entrances
B14 Replace wall tiles in kitchen and bathrooms
B15 Replace towel rails
B16 Replace toilet roll holder
B17 Replace damaged cupboard doors, pull handles, catches and hinges
B18 Repair damp walls (water ingress as a result of roof leaks)
B19 Replace rusted sink kitchenette units, water damaged wall units and base units
B20 Replace wall tiles in kitchen area
B21 Replace all kitchen cupboards and sink units
B22 Replace timber doors at clothing and linen stores
B23 Install aluminium shower doors

No.	DATE	AMENDMENT	D.F.N.

Copyright vested in the South African Police Service

A1

SOUTH AFRICAN POLICE SERVICE
PROGRAM & PROJECT MANAGEMENT

SAPS DIVISION SCM
FACILITY MANAGEMENT
PRIVATE BAG X 284
PRETORIA
0001
TEL: 012 846 5939
FAX: 012 845 0762

MULTIDISCIPLINARY

APPOINTMENT OF A BUILD ENVIRONMENT PROFESSIONAL TO FULFILL THE ROLE OF A LEAD CONSULTANT: PLANNED REPAIR AND MAINTENANCE PROJECT AT THEUNISSEN POLICE STATION (FREE STATE)

Tender No. 19/1/9/1/33 TB (20)

SAPS THEUNISSEN
HOUSING QUARTERS & GARAGES: BUILDING, ROAD ANS STORMWATER DRAINAGE SCOPE OF WORKS

1 : 100 (A1 SHEET) | F BAAYMAN
SEPTEMBER 2023 | J GROBBELAAR

THS/S5/CF-002

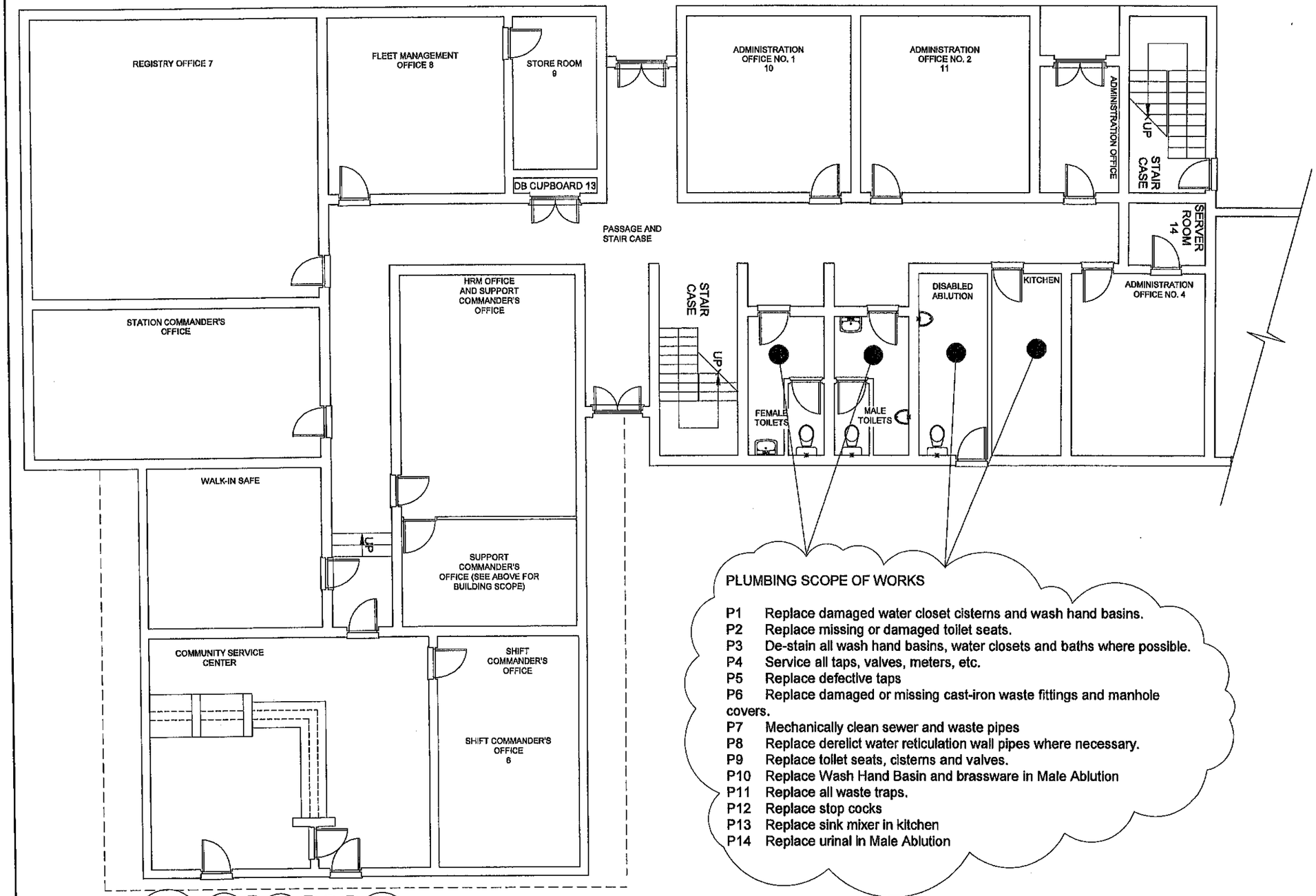

PLUMBING SCOPE OF WORKS

P1 Replace damaged water closet cisterns and wash hand basins.
P2 Replace missing or damaged toilet seats.
P3 De-stain all wash hand basins, water closets and baths where possible.
P4 Service all taps, valves, meters, etc.
P5 Replace defective taps
P6 Replace damaged or missing cast-iron waste fittings and manhole covers.
P7 Mechanically clean sewer and waste pipes
P8 Replace derelict water reticulation wall pipes where necessary.
P9 Replace toilet seats, cisterns and valves.
P10 Replace Wash Hand Basin and brassware in Male Ablution
P11 Replace all waste traps.
P12 Replace stop cocks
P13 Replace sink mixer in kitchen
P14 Replace urinal in Male Ablution

EXTERNAL WATER AND SEWER SCOPE

PE1 Inspect and repair underground water distribution pipes where required.
PE2 Service valves and pressure pumps
PE3 Installation of water meters at all the buildings for consumption audit.
PE4 Inspect and clean current water storage tanks
PE5 Install 10kl water storage tank parallel to existing to achieve legislatory requirements
PE6 Repair pipe work.
PE7 Cleaning of manholes.
PE8 Repair damaged gullies and gratings.

ADMINISTRATION AND SUPPORT
OFFICE BLOCK GROUND FLOOR
PLUMBING SCOPE OF WORKS

1 : 50

No.	DATE	AMENDMENT	DRW

Copyright vests in the South African Police Service

AS BUILT DRAWINGS

NOTED AS BUILT INFORMATION FOR CONSTRUCTION DETAILS
NOTE AS BUILT DRAWING REQUIREMENTS

name:
date:
professional registration no.:

CAD file name: Paper size: A1

SOUTH AFRICAN POLICE SERVICE
PROGRAM & PROJECT MANAGEMENT

SAPS DIVISION SCM
FACILITY MANAGEMENT
PRIVATE BAG X 254
PRETORIA
0001

TEL: 012 846 8930
FAX: 012 846 8782

Project: MULTIDISCIPLINARY

Title: APPOINTMENT OF A BUILD ENVIRONMENT PROFESSIONAL TO FULFILL THE ROLE OF A LEAD CONSULTANT: PLANNED REPAIR AND MAINTENANCE PROJECT AT THEUNISSEN POLICE STATION (FREE STATE)

Tender Number: Tender No. 19/1/9/1/33 TB (20)

Drawing title: SAPS THEUNISSEN ADMINISTRASTION GROUND FLOOR: PLUMBING AND DRAINGE SCOPE OF WORKS

Revision no: Signature:

Scale: 1 : 50 (A1 SHEET) Drawn: F SAAYMAN

Date: SEPTEMBER 2023 Checked: J GROOBELAAR

Drawing number: THS/S6/WS-001

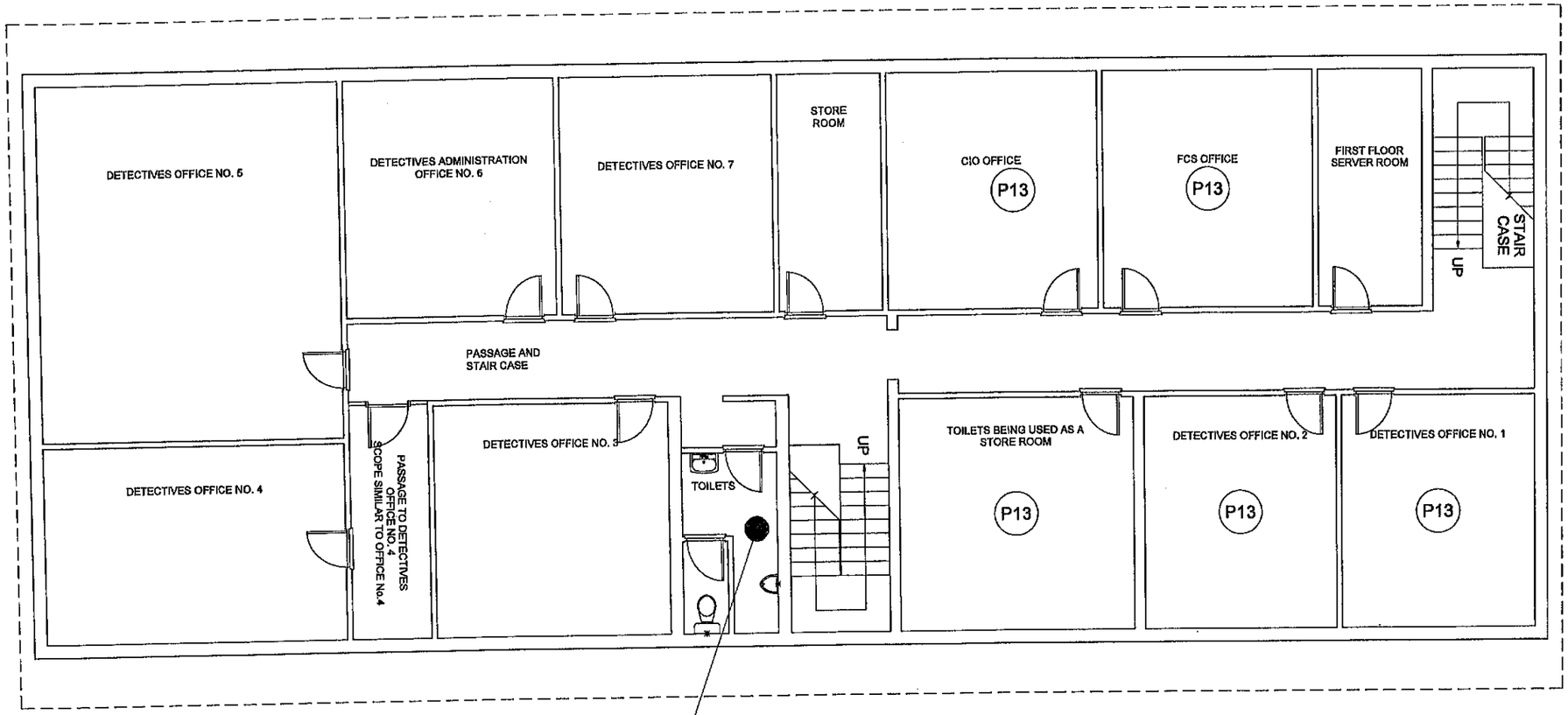

ADMINISTRATION AND SUPPORT
OFFICE BLOCK FIRST FLOOR
BUILDING SCOPE

1 : 50

PLUMBING SCOPE OF WORKS

P1 Replace damaged water closet cisterns and wash hand basins.
P2 Replace missing or damaged toilet seats.
P3 De-stain all wash hand basins, water closets and baths where possible.
P4 Service all taps, valves, meters, etc.
P5 Replace defective taps
P6 Replace damaged or missing cast-iron waste fittings and manhole covers.
P7 Mechanically clean sewer and waste pipes
P8 Replace derelict water reticulation wall pipes where necessary.
P9 Replace toilet seats, cisterns and valves.
P10 Replace Wash Hand Basin and brassware in Male Ablution
P11 Replace all waste traps.
P12 Replace stop cocks
P13 De-commission of water reticulation in old "single quarters" and removal of sanitary fittings

EXTERNAL WATER AND SEWER SCOPE

PE1 Inspect and repair underground water distribution pipes where required.
PE2 Service valves and pressure pumps
PE3 Installation of water meters at all the buildings for consumption audit.
PE4 Inspect and clean current water storage tanks
PE5 Install 10kℓ water storage tank parallel to existing to achieve legislatory requirements
PE6 Repair pipe work.
PE7 Cleaning of manholes.
PE8 Repair damaged gullies and gratings.

No.	DATE	AMENDMENT	D.F.W.

Copyright vests in the South African Police Service

A1

SOUTH AFRICAN POLICE SERVICE
PROGRAM & PROJECT MANAGEMENT

SAPS DIVISION SCM
FACILITY MANAGEMENT
PRIVATE BAGX 264
PRETORIA
0001

TEL: 012 845 5939
FAX: 012 845 8762

MULTIDISCIPLINARY

APPOINTMENT OF A BUILD ENVIRONMENT PROFESSIONAL TO FULFILL THE ROLE OF A LEAD CONSULTANT: PLANNED REPAIR AND MAINTENANCE PROJECT AT THEUNISSEN POLICE STATION (FREE STATE)

Tender Number
Tender No. 19/1/9/1/33 TB (20)

Drawing title
SAPS THEUNISSEN
ADMINISTRASTION FIRST FLOOR:
PLUMBING AND DRAINAGE
SCOPE OF WORKS

Scale 1 : 50 (A1 SHEET)
Drawn F BAAYMAN
Date SEPTEMBER 2023
Checked J GROBBELAAR

Drawing number
THS/S6/WS-002

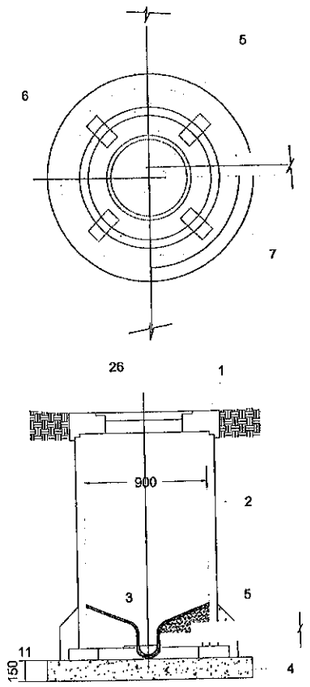

TYPICAL MANHOLE SECTION:
DEPTH UP TO 1,5m
SCALE 1:20

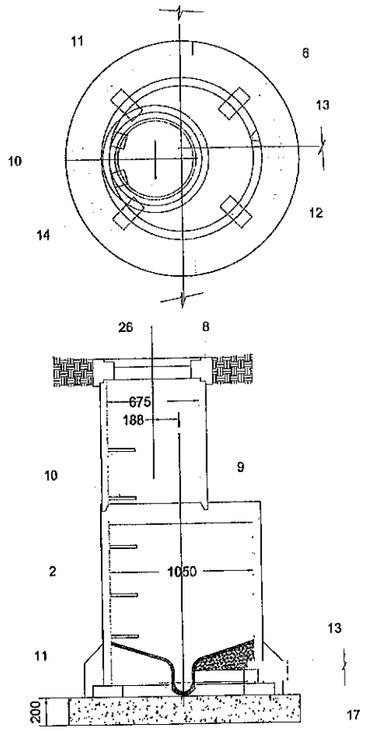

TYPICAL MANHOLE SECTION:
DEPTHS 1,5m UP TO 3,0m
SCALE 1:20

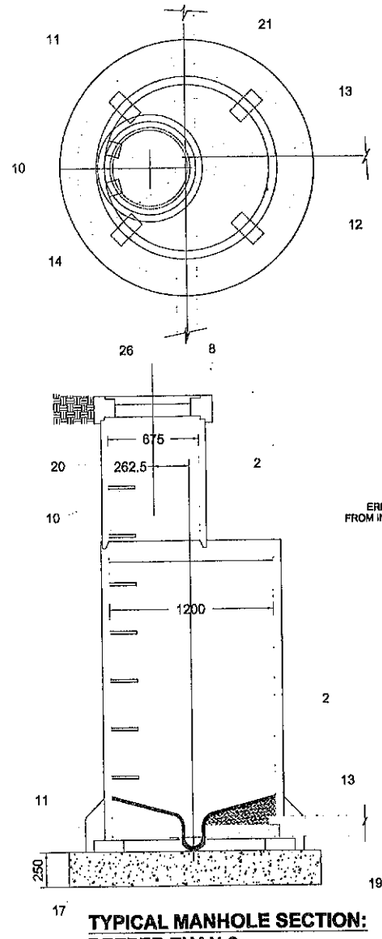

TYPICAL MANHOLE SECTION:
DEEPER THAN 3m
SCALE 1:20

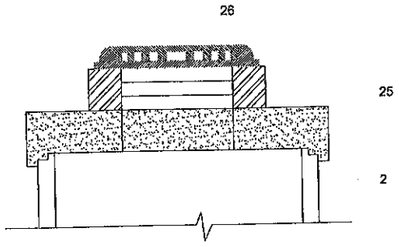

STANDARD HEAVY DUTY COVER
SCALE 1:10

SEWER MANHOLE LEGEND

1. SABS 558-1973 TYPE 4A CIRCULAR MANHOLE COVER AND FRAME, CAST INTO 1100mm DIA x 150mm THICK PRECAST COVER SLAB.
2. PRECAST CONCRETE CHAMBER SECTIONS GENERALLY TO SABS 867-1959 "CONCRETE CYLINDRICAL PIPES AND FITTINGS".
3. 20mm GRANO RENDERING WITH DOLOMITIC AGGREGATE.
4. CONCRETE BASE CAST BETWEEN SHEET METAL FORM (MIX 1:2:4) .
5. CUT OUT IN CHAMBER SECTION FOR BRANCH.
6. MINIMUM SLOPE OF BENCHING 1 : 6, MAXIMUM 1 : 4.
7. BOTH LINES 75mm OFF CENTRE. IN THE ABSENCE OF A BRANCH SEWER, CL OF MAIN TO PASS THROUGH CENTRE OF MANHOLE.
8. SABS 558-1973 TYPE 4 CIRCULAR MANHOLE COVER AND FRAME CAST INTO 675mm DIA. x 150mm THICK PRECAST COVER SLAB.
9. 150mm THICK PRECAST R.C. REDUCER SLAB.
10. STEP-IRON TO B.S.S. 1247-1955 STANDARD.
11. 4 BRICKS ON END TO SUPPORT BOTTOM RING DURING COMPLETION OF BENCHING.
12. 1/8 CIRCLE CHANNEL BEND.
13. SPIGOT AND SOCKET PIPE WITH FLEXIBLE JOINT.
14. 915mm LONG STRAIGHT CHANNEL IN MANHOLE BASE. BENDS OTHER THAN 90° TO BE FORMED BY SUBSTITUTING APPROPRIATE CHANNEL BEND AND STRAIGHT CHANNEL.
15. 305mm LONG SPIGOT AND SOCKET PIPE.
16. 45° RAMP JUNCTION.
17. CONCRETE MIX 1 : 3 : 6.
18. 1/4 CIRCLE BEND.
19. 25mm FALL IN CHANNEL BEND.
20. ACCESS SHAFT TO BE POSITIONED ON LEFT HAND SIDE LOOKING UPSTREAM.
21. END OF PIPE TO PROJECT 75mm INTO CHAMBER AND TO HAVE 150mm CONCRETE PROTECTION.
22. 305mm LONG SPIGOT AND SOCKET PIPE WITH FLEXIBLE JOINT.
23. 1/8 CIRCLE SINGLE CHANNEL BEND.
24. 380mm LONG SPIGOT AND SOCKET PIPE.
25. 80mm LONG SPIGOT AND SOCKET PIPE.
26. 150mm THICK PRECAST R.C. HEAVY DUTY COVER SLAB MANHOLE COVERS. SABS 558-1973 TYPE 1B CIRCULAR MANHOLE COVER AND FRAME, (EXCEPT IN ROADWAYS USE TYPE 2B)

NOTES

1. uPVC STRUCTURAL WALL SEWER PIPE : PIPES IN LENGTHS OF 6m WITH INTEGRAL SOCKET AND RING AT ONE END AND COMPLY WITH SANS 791 CLASS 34.
2. FLEXIBLE JOINTS :
   a) RUBBER RINGS COMPLYING WITH PART SANS 974.
   b) FLEXIBLE JOINTS TO BE TIGHT WITH NO SIGNS OF LEAKAGE WHEN TESTED ACCORDING TO SUBCLAUSE 4.4 OF SECTION LD OF PART 3 OF SANS 1200.
3. FIELD TESTS :
   a) AIR TESTS ACCORDING TO CLAUSE 7.2 OF SANS 1200 LD MUST BE CARRIED OUT BETWEEN MANHOLES DURING THE FOLLOWING PHASES OF CONSTRUCTION:
   i) AFTER THE PIPES HAVE BEEN LAID.
   ii) AFTER THE INITIAL BACKFILLING HAS BEEN COMPLETED.
   b) THE AIR TEST IS ONLY AN INDICATION OF ACCEPTANCE OF A COMPLETED PORTION OF THE LINE AND IN ANY DISPUTE ARISING THE OUTCOME OF A WATER TEST WILL BE BINDING.
4. TRENCHES :
   a) EXCAVATION AND BACKFILLING OF TRENCHES TO COMPLY WITH SANS 1200 DE.
   b) BEDDING OF PIPES TO COMPLY WITH SANS 1200 LB.
   c) SEWERS TO BE PROTECTED AT ROAD CROSSINGS AS SHOWN ON THE TYPICAL PLAN FOR PIPE BEDDINGS.
   d) THE INFLOW OF STORMWATER IS TO BE PROHIBITED.
5. MANHOLES & FITTINGS :
   a) ALL CONCRETE, BENCHING AND SEALERS SHALL COMPLY WITH SANS 1200 GA OR SANS 1200 AS APPLICABLE.
   b) PRECAST CONCRETE SECTIONS TO COMPLY WITH SANS 1294.
   c) CLASSES OF CONCRETE :
      i) PRECAST CONCRETE SECTIONS - 30/19.
      ii) ALL OTHER CONCRETE - 25/19.
   d) CHANNELS IN MANHOLES TO BE LAID IN THE WET CONCRETE FLOOR AND THE FIRST PRECAST CONCRETE SECTION TO BE PLACED AND THE BENCHING COMPLETED WITHIN 24 HOURS AFTER CASTING THE CONCRETE FLOOR. NO DRIERS WILL BE PERMITTED FOR THE BENCHING. BENCHING TO BE STEEL TROWELLED TO A SMOOTH FINISH.
   e) STEP IRONS SHALL NOT BE INSTALLED IN MANHOLES, EXCEPT WHERE MANHOLE DEPTH EXCEEDS 1.2m.

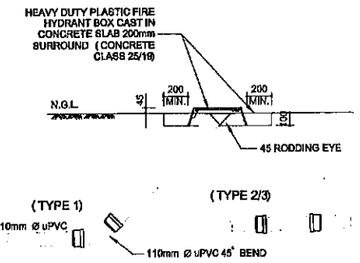

TYPICAL DETAIL FOR RODDING EYES
N.T.S.

NOTES :

(1) ALL PIPES AND FITTINGS SHALL BE OF APPROVED TYPE WITH FLEXIBLE JOINTS.

(2) SEWER CONNECTION MAY CONNECT DIRECTLY INTO A MANHOLE WHERE APPLICABLE.

(3) SPECIFICATIONS FOR THE LAYING, JOINTING ETC OF SEWERS IN ACCORDANCE WITH SABS 1200 LD.

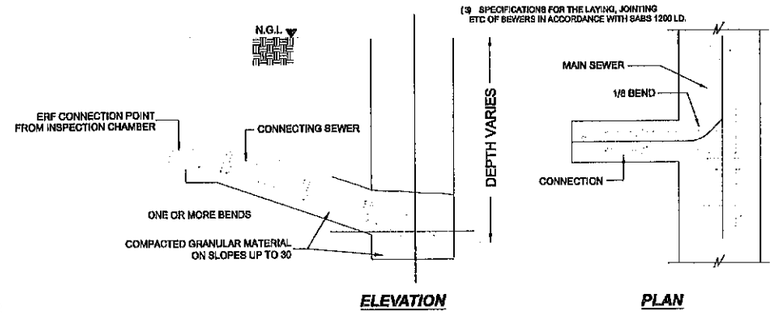

TYPICAL DETAIL OF SEWER CONNECTION
N.T.S.

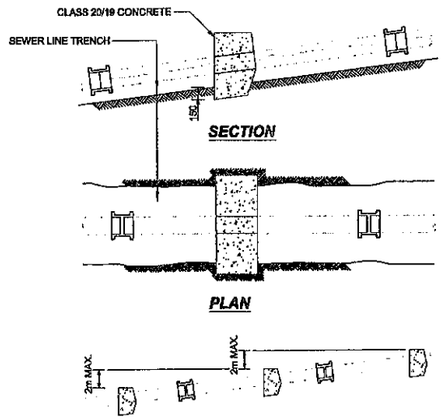

SPACING OF ANCHOR BLOCKS ON SLOPES STEEPER THAN 1 : 10
N.T.S.

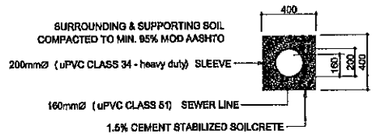

TYPICAL DETAIL OF NEW SEWER LINE ENCASEMENT
N.T.S.

NOTES

PDR DRAWING

NR. NO	DATUM DATE	PARAF INITIALS	BESKRYWING DESCRIPTION

WYSIGINGS REVISIONS

KLIENT CLIENT

PROJEK PROJECT

SAPS THEUNISSEN ADMINISTRASTION, SUPPORT AND CELL BLOCK GROUND FLOOR AND FIRTST FLOOR PLAN

TITEL TITLE

TYPICAL SEWER DETAILS

SKAAL SCALE	KONTRAK NR. CONTRACT NO.
AS SHOWN	
GETEKEN DRAWN: RP	ONTWERP DESIGNED: RP
DATUM DATE: SEPTEMBER 2023	GOEDGEKEUR APPROVED: AEL
TEKENING NR. DRAWING NO.: THS/S6/WS-003	VERW.REF. 0

A1 WIDE

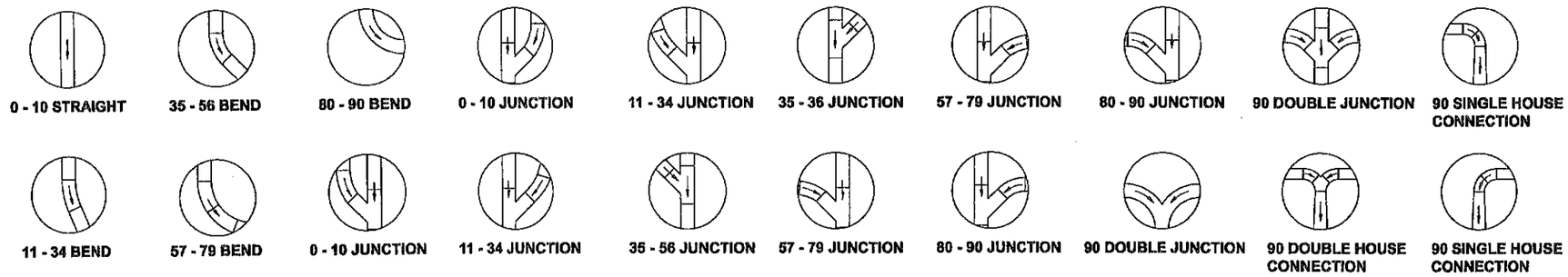

TYPICAL MANHOLE JUNCTIONS
N.T.S.

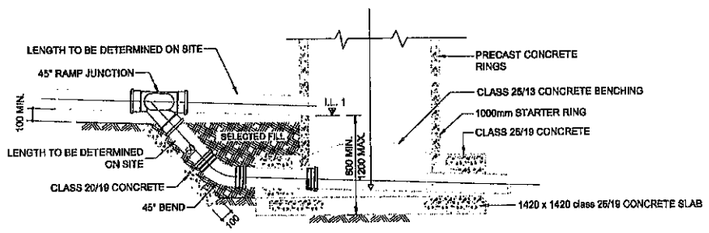

MANHOLE WITH HIGH INLET RAMP TYPE <1200mm
N.T.S.

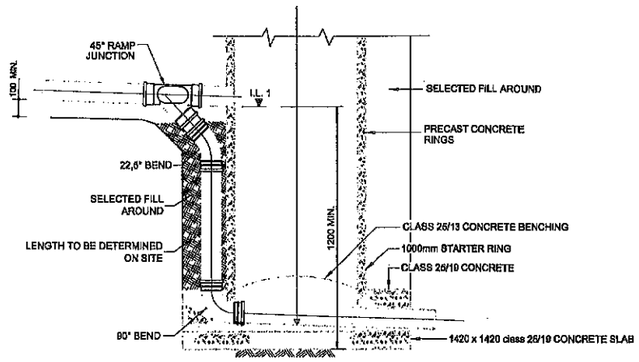

MANHOLE WITH HIGH INLET VERTICAL DROP (TYPE >1200mm)
N.T.S.

FIXING DETAILS FOR SADDLES

(a) CUT 100mm HOLE THROUGH EXISTING PIPE. SPECIAL CARE MUST BE TAKEN TO PREVENT DEBRIS FROM FALLING INTO THE EXISTING PIPE.

(b) FIX SADDLE TO EXISTING PIPE WITH PROSTRUCT 617 EPOXY, OR OTHER SIMILAR APPROVED.

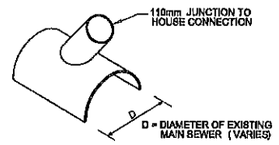

FIXING DETAILS OF SADDLE ON EXISTING MAIN SEWER
N.T.S.

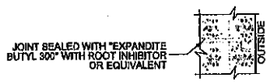

DETAIL OF MANHOLE PRECAST RING JOINT
N.T.S.

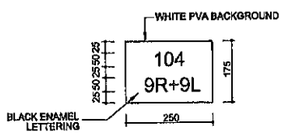

PAINT MARKER ON COVER SLAB OF MAIN SEWER
N.T.S.

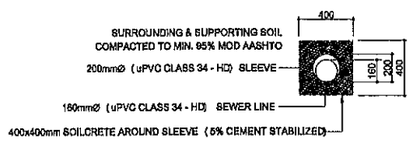

TYPICAL DETAIL NEW SEWER LINE ENCASEMENT
N.T.S.

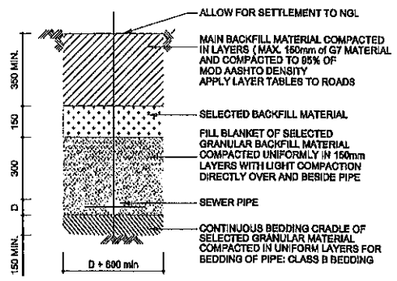

TYPICAL SEWER TRENCH SECTION
N.T.S.

NOTES

1. uPVC STRUCTURAL WALL SEWER PIPE : PIPES IN LENGTHS OF 6m WITH INTEGRAL SOCKET AND RING AT ONE END AND COMPLY WITH SANS 1601/1994 CLASS 34.
2. FLEXIBLE JOINTS :
   a) RUBBER RINGS COMPLYING WITH PART SANS 974.
   b) FLEXIBLE JOINTS TO BE TIGHT WITH NO SIGNS OF LEAKAGE WHEN TESTED ACCORDING TO SUSCLAUSE 4.4 OF SECTION LD OF PART 3 OF SANS 1200.
3. FIELD TESTS :
   a) AIR TESTS ACCORDING TO CLAUSE 7.2 OF SANS 1200 LD MUST BE CARRIED OUT BETWEEN MANHOLES DURING THE FOLLOWING PHASES OF CONSTRUCTION:
   i) AFTER THE PIPES HAVE BEEN LAID.
   ii) AFTER THE INITIAL BACKFILLING HAS BEEN COMPLETED.
   b) THE AIR TEST IS ONLY AN INDICATION OF ACCEPTANCE OF A COMPLETED PORTION OF THE LINE AND IN ANY DISPUTE ARISING THE OUTCOME OF A WATER TEST WILL BE BINDING.
4. TRENCHES :
   a) EXCAVATION AND BACKFILLING OF TRENCHES TO COMPLY WITH SANS 1200 DB.
   b) BEDDING OF PIPES TO COMPLY WITH SANS 1200 LB.
   c) SEWERS TO BE PROTECTED AT ROAD CROSSINGS AS SHOWN ON THE TYPICAL PLAN FOR PIPE BEDDINGS.
   d) THE INFLOW OF STORMWATER IS TO BE PROHIBITED.
5. MANHOLES & FITTINGS :
   a) ALL CONCRETE, BENCHING AND SEALERS SHALL COMPLY WITH SANS 1200 GA OR SANS 1200 AS APPLICABLE.
   b) PRECAST CONCRETE SECTIONS TO COMPLY WITH SANS 1294.
   c) CLASSES OF CONCRETE :
      i) PRECAST CONCRETE SECTIONS - 30/19.
      ii) ALL OTHER CONCRETE - 25/19.
   d) CHANNELS IN MANHOLES TO BE LAID IN THE WET CONCRETE FLOOR AND THE FIRST PRECAST CONCRETE SECTION TO BE PLACED AND THE BENCHING COMPLETED WITHIN 24 HOURS AFTER CASTING THE CONCRETE FLOOR. NO DRIERS WILL BE PERMITTED FOR THE BENCHING. BENCHING TO BE STEEL TROWELLED TO A SMOOTH FINISH.
   e) STEP IRONS SHALL NOT BE INSTALLED IN MANHOLES, EXCEPT WHERE MANHOLE DEPTH EXCEEDS 1.2m.

NOTAS NOTES

PDR DRAWING

NR. NO	DATUM DATE	PARAF INITIALS	BESKRYWING DESCRIPTION

WYSIGINGS REVISIONS

KLIENT CLIENT

PROJEK PROJECT

SAPS THEUNISSEN
ADMINISTRASTION, SUPPORT
AND CELL BLOCK GROUND FLOOR
AND FIRTST FLOOR PLAN

TITEL TITLE

TYPICAL SEWER DETAILS

SKAAL SCALE	KONTRAK NR. CONTRACT No.	
AS SHOWN		
GETEKEN DRAWN	ONTWERP DESIGNED	
RP	RP	
DATUM DATE	GOEDGEKEUR APPROVED	
SEPTEMBER 2023	AEL	
TEKENING NR. DRAWING NO.	VERWYSING.	
THS/S6/WS-004	0	

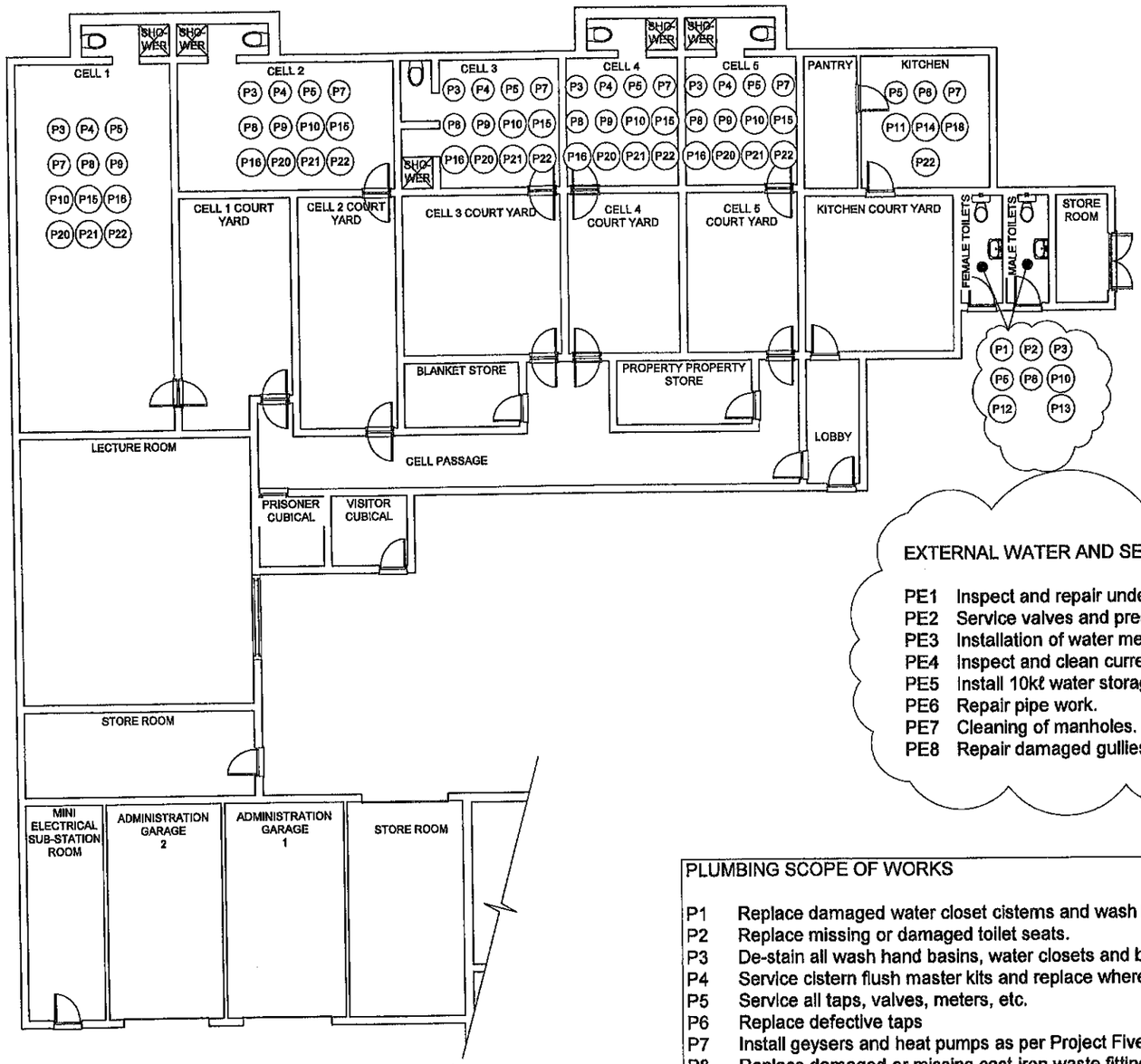

GARAGES, LECTURE ROOM, CELL BLOCK AND PUBLIC ABLUTIONS PLUMBING SCOPE

1 : 75

EXTERNAL WATER AND SEWER SCOPE

PE1 Inspect and repair underground water distribution pipes where required.
PE2 Service valves and pressure pumps
PE3 Installation of water meters at all the buildings for consumption audit.
PE4 Inspect and clean current water storage tanks
PE5 Install 10kℓ water storage tank parallel to existing to achieve legislatory requirements
PE6 Repair pipe work.
PE7 Cleaning of manholes.
PE8 Repair damaged gullies and gratings.

PLUMBING SCOPE OF WORKS

P1 Replace damaged water closet cisterns and wash hand basins.
P2 Replace missing or damaged toilet seats.
P3 De-stain all wash hand basins, water closets and baths where possible.
P4 Service cistern flush master kits and replace where necessary.
P5 Service all taps, valves, meters, etc.
P6 Replace defective taps
P7 Install geysers and heat pumps as per Project Five Star 2012
P8 Replace damaged or missing cast-iron waste fittings and manhole covers.
P9 Mechanically clean sewer and waste pipes
P10 Replace derelict water reticulation wall pipes where necessary.
P11 Replace sink mixer in kitchen
P12 Replace toilet seats, cisterns and valves.
P13 Replace Wash Hand Basin and brassware in Male Ablution
P14 Replace all waste traps.
P15 Replace flush masters to sanitary ware
P16 Replace vandal proof shower heads as existing has been discontinued.
P17 Replace stop cocks
P18 Replace sink mixer and P-trap waste in Cell Block Kitchen
P19 Replace shower rose
P20 Replace recessed basin drinking fountain
P21 Replace current HWC's with 200ℓ holding vessel (HWC) complete with heat pumps
P22 Destain and clean stainless-steel sanitary ware

No.	DATE	AMENDMENT	D.P.W.

Copyright vests in the South African Police Service

as built drawings

CONTRACTOR TO SUBMIT AS BUILT DRAWINGS AT THE TERMINATION OF THE CONTRACT AND ACHIEVE AS BUILT DRAWING REQUIREMENTS

name:
date:
professional (registration no.):

sheet size: A1

SOUTH AFRICAN POLICE SERVICE
PROGRAM & PROJECT MANAGEMENT

SAPS DIVISION SCM
FACILITY MANAGEMENT
PRIVATE BAG X 254
PRETORIA
0001

TEL: 012 845 6939
FAX: 012 846 8762

MULTIDISCIPLINARY

APPOINTMENT OF A BUILD ENVIRONMENT PROFESSIONAL TO FULFILL THE ROLE OF A LEAD CONSULTANT: PLANNED REPAIR AND MAINTENANCE PROJECT AT THEUNISSEN POLICE STATION (FREE STATE)

Tender No. 19/1/9/1/33 TB (20)

SAPS THEUNISSEN
SUPPORT, GARAGES
AND CELL BLOCK GROUND FLOOR:
PLUMBING AND DRAINAGE
SCOPE OF WORKS

1 : 75 (A1 SHEET)	F BAYMAN
SEPTEMBER 2023	J GROBBELAAR

THS/S6/WS-005

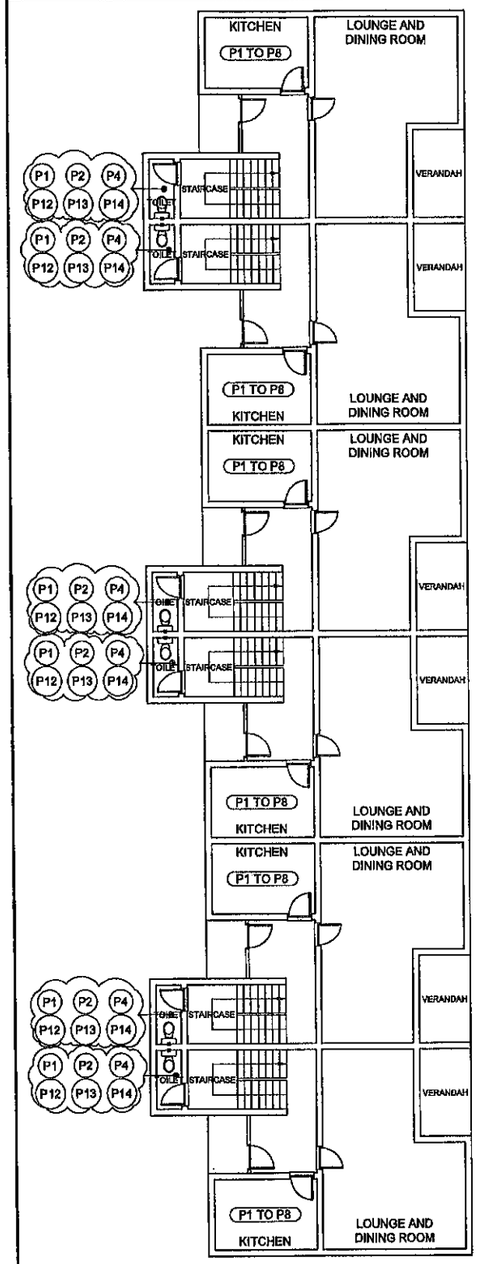

HOUSING QUARTERS: GROUND FLOOR
1 : 100

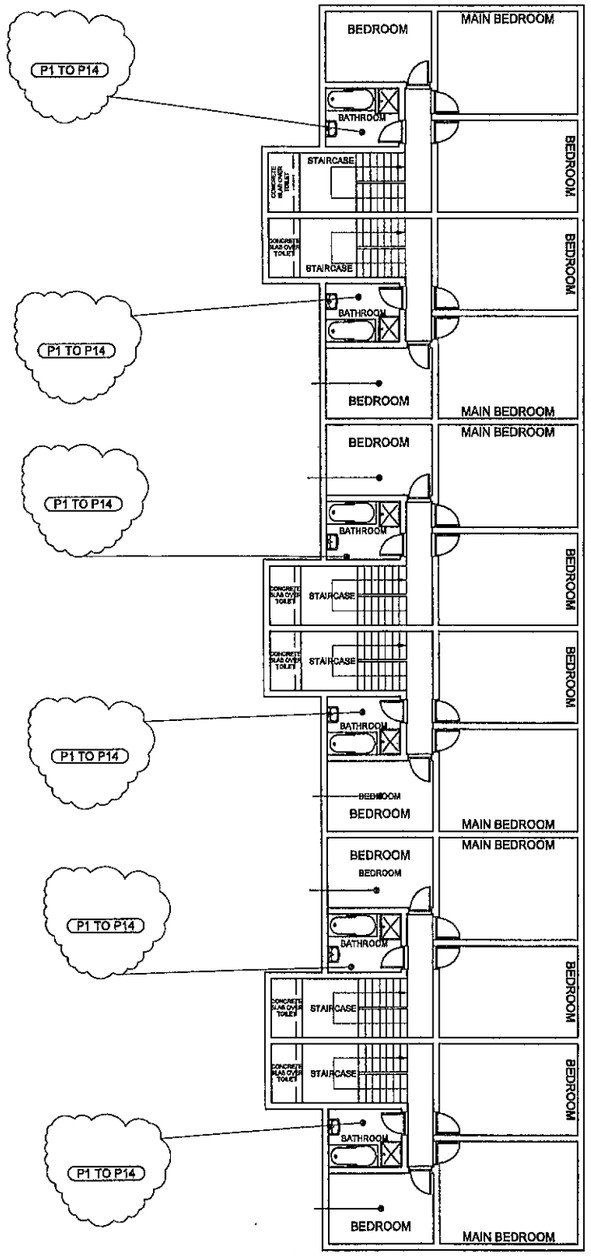

HOUSING QUARTERS: FIRST FLOOR
1 : 100

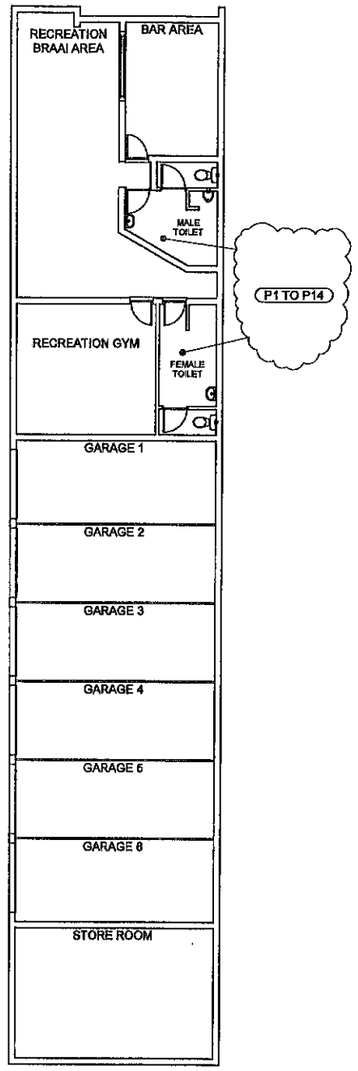

HOUSING QUARTERS: GARAGE, STORES AND RECREACTION AREA
1 : 75

EXTERNAL WATER AND SEWER SCOPE

- PE1 Inspect and repair underground water distribution pipes where required.
- PE2 Service valves and pressure pumps
- PE3 Installation of water meters at all the buildings for consumption audit.
- PE4 Inspect and clean current water storage tanks
- PE5 Repair pipe work.
- PE6 Cleaning of manholes.
- PE7 Repair damaged gullies and gratings.
- PE8 Water meters and water connections to living quarters to be serviced

PLUMBING SCOPE OF WORKS

- P1 Service all taps, valves, meters, etc.
- P2 Replace defective taps
- P3 Service and clean geysers where feasible.
- P4 Replace damaged or missing cast-iron waste fittings and manhole covers.
- P5 Mechanically clean sewer and waste pipes
- P6 Replace derelict water reticulation wall pipes where necessary.
- P7 Replace sink mixer in kitchen
- P8 Replace 150lt geyser with all valves and connections
- P9 Replace broken valve and meter boxes
- P10 Replace water meters and damaged boxes.
- P11 Replace gulley precast concrete top
- P12 De-stain all wash hand basins, water closets and baths where possible.
- P13 Replace damaged water closet cisterns and wash hand basins.
- P14 Replace missing or damaged toilet seats.

No.	DATE	AMENDMENT	D.P.W.

Copyright vests in the South African Police Service

AS BUILT drawings

AS BUILT DRAWINGS REQUIREMENTS
Arrive AS BUILT DRAWING REQUIREMENTS

name:
date:
professional registration no.:

Sheet size / Paper size: A1

SOUTH AFRICAN POLICE SERVICE
PROGRAM & PROJECT MANAGEMENT

SAPS DIVISION SCM
FACILITY MANAGEMENT
PRIVATE BAG X 264
PRETORIA
0001

TEL: 012 845 6939
FAX: 012 845 6762

Discipline: MULTIDISCIPLINARY

Project: APPOINTMENT OF A BUILD ENVIRONMENT PROFESSIONAL TO FULFILL THE ROLE OF A LEAD CONSULTANT: PLANNED REPAIR AND MAINTENANCE PROJECT AT THEUNISSEN POLICE STATION (FREE STATE)

Tender No. 19/1/9/1/33 TB (20)

Drawing title: SAPS THEUNISSEN HOUSING QUARTERS & GARAGES: PLUMBING AND DRAINAGE SCOPE OF WORKS

Scale: 1 : 100 (A1 SHEET)
Drawn: F BAAYMAN
Date: SEPTEMBER 2023
Drawing number: J GROBBELAAR

THS/S6/WS-006

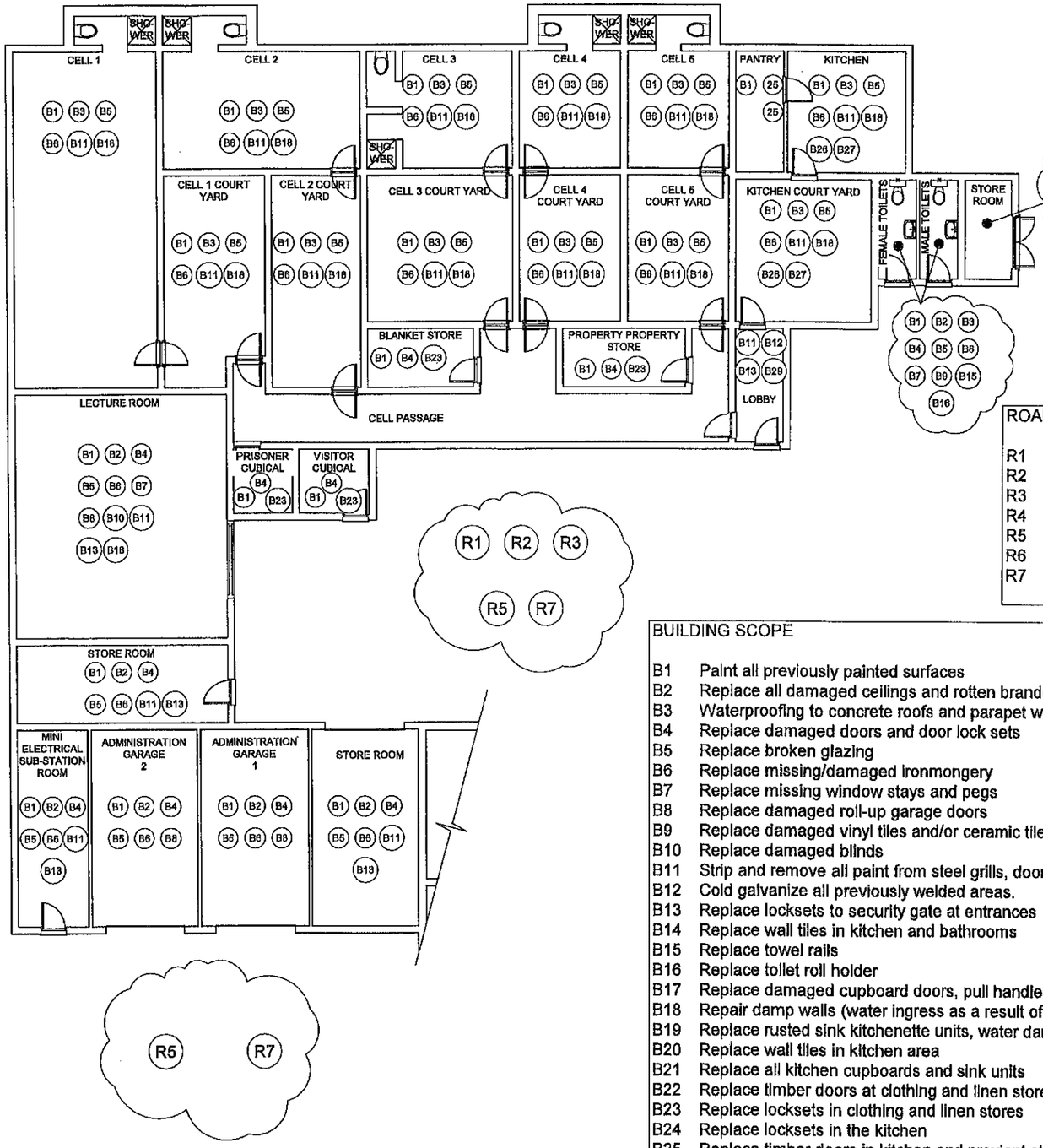

GARAGES, LECTURE ROOM, CELL BLOCK AND PUBLIC ABLUTIONS BUIDLING AND ROADS SCOPE

1 : 75

EXTERNAL BUILDING SCOPE OF WORKS

BE1 Replacement of rusted and dilapidated roof sheeting at all buildings with new concealed fixed roof sheeting or similar approved roof covering
BE2 Replace defective damaged timber truss elements, fascia and barge boards
BE3 Replace all rusted gutters and downpipes with seamless aluminium system
BE4 Clean external face brick facades

ROADS AND STORMWATER SCOPE

R1 Localised surface repair on concrete surfaced roads and areas.
R2 Sealing of joints.
R3 Repair minor damaged road and concrete surfaces.
R4 Localised repairs of concrete paving damaged by tree roots.
R5 Storm water catch pits and gullies to be repaired and grids replaced.
R6 Replace and repair paving areas and make good by removing roots of trees.
R7 Repair damaged bitumen surfaces.

BUILDING SCOPE

B1 Paint all previously painted surfaces
B2 Replace all damaged ceilings and rotten brandering
B3 Waterproofing to concrete roofs and parapet walls
B4 Replace damaged doors and door lock sets
B5 Replace broken glazing
B6 Replace missing/damaged ironmongery
B7 Replace missing window stays and pegs
B8 Replace damaged roll-up garage doors
B9 Replace damaged vinyl tiles and/or ceramic tiles.
B10 Replace damaged blinds
B11 Strip and remove all paint from steel grills, doors and frames and repaint
B12 Cold galvanize all previously welded areas.
B13 Replace locksets to security gate at entrances
B14 Replace wall tiles in kitchen and bathrooms
B15 Replace towel rails
B16 Replace toilet roll holder
B17 Replace damaged cupboard doors, pull handles, catches and hinges
B18 Repair damp walls (water ingress as a result of roof leaks)
B19 Replace rusted sink kitchenette units, water damaged wall units and base units
B20 Replace wall tiles in kitchen area
B21 Replace all kitchen cupboards and sink units
B22 Replace timber doors at clothing and linen stores
B23 Replace locksets in clothing and linen stores
B24 Replace locksets in the kitchen
B25 Replace timber doors in kitchen and proviant store
B26 Repaint natural gas cage
B27 Replace washing line in kitchen courtyard
B28 Repair non-contact visitor's facility glass barrier and seating area
B29 Clean external face brick facades

No.	DATE	AMENDMENT	D.P.W.

A1

SOUTH AFRICAN POLICE SERVICE
PROGRAM & PROJECT MANAGEMENT

SAPS DIVISION SCM
FACILITY MANAGEMENT
PRIVATE BAG X 264
PRETORIA
0001

TEL: 012 846 6939
FAX: 012 846 8762

MULTIDISCIPLINARY

APPOINTMENT OF A BUILD ENVIRONMENT PROFESSIONAL TO FULFILL THE ROLE OF A LEAD CONSULTANT: PLANNED REPAIR AND MAINTENANCE PROJECT AT THEUNISSEN POLICE STATION (FREE STATE)

Tender No. 19/1/9/1/33 TB (20)

SAPS THEUNISSEN:
SUPPORT, GARAGES,
CELL BLOCK AND PUBLIC ABLUTIONS:
BUILDING AND ROADS SCOPE OF WORKS

1:75 (A1 SHEET) | F BAAYMAN
SEPTEMBER 2023 | J GROBBELAAR

THS/S7/RS-001

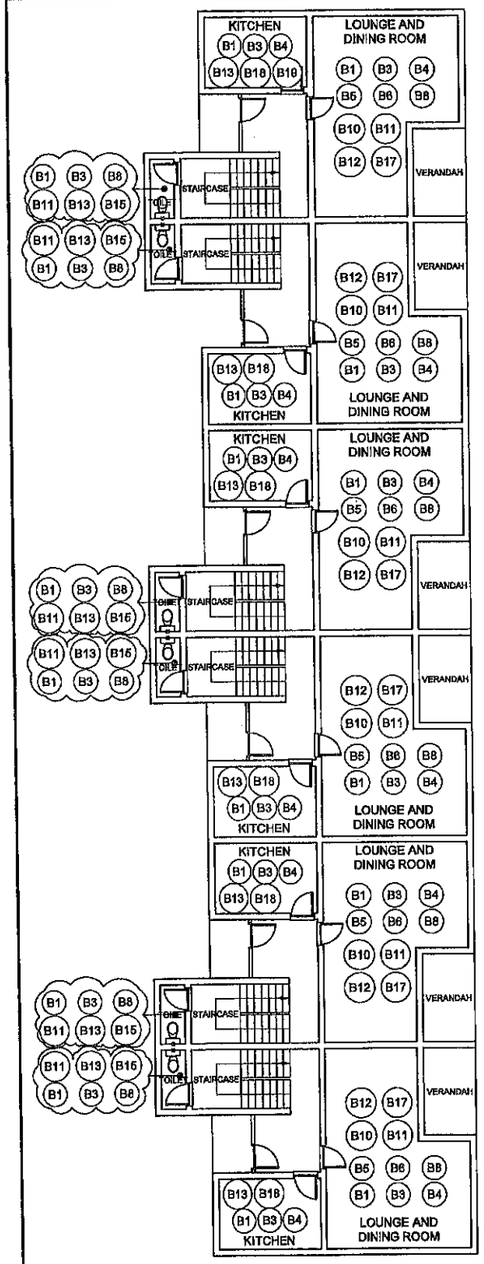

HOUSING QUARTERS: GROUND FLOOR
1 : 100

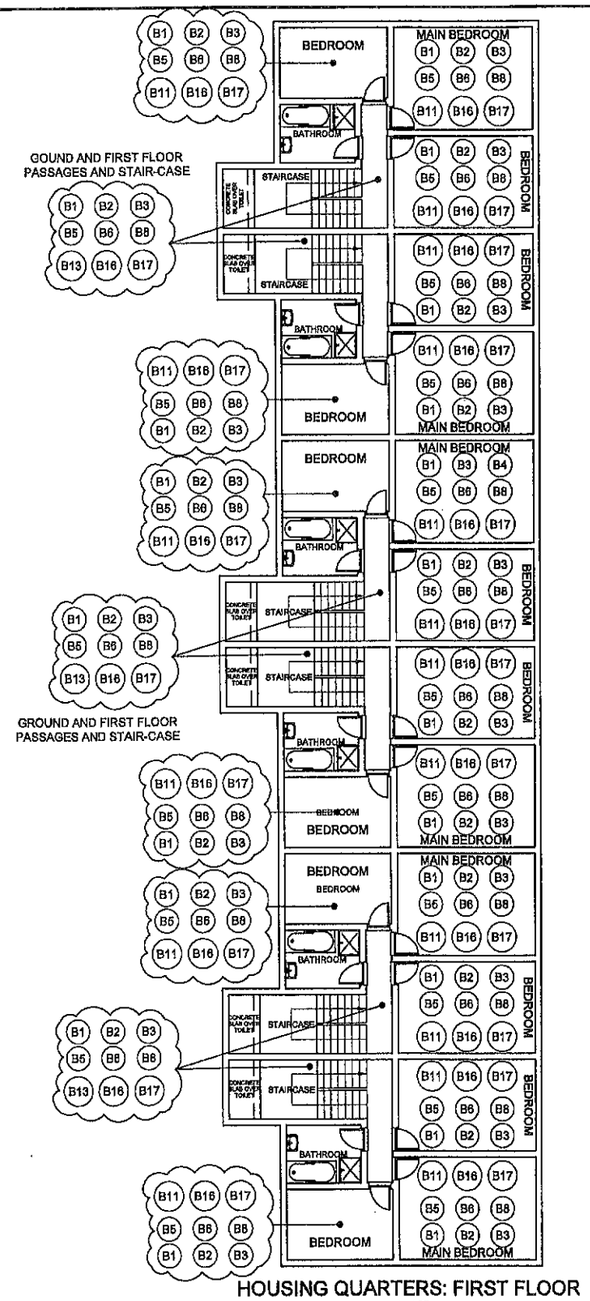

HOUSING QUARTERS: FIRST FLOOR
1 : 100

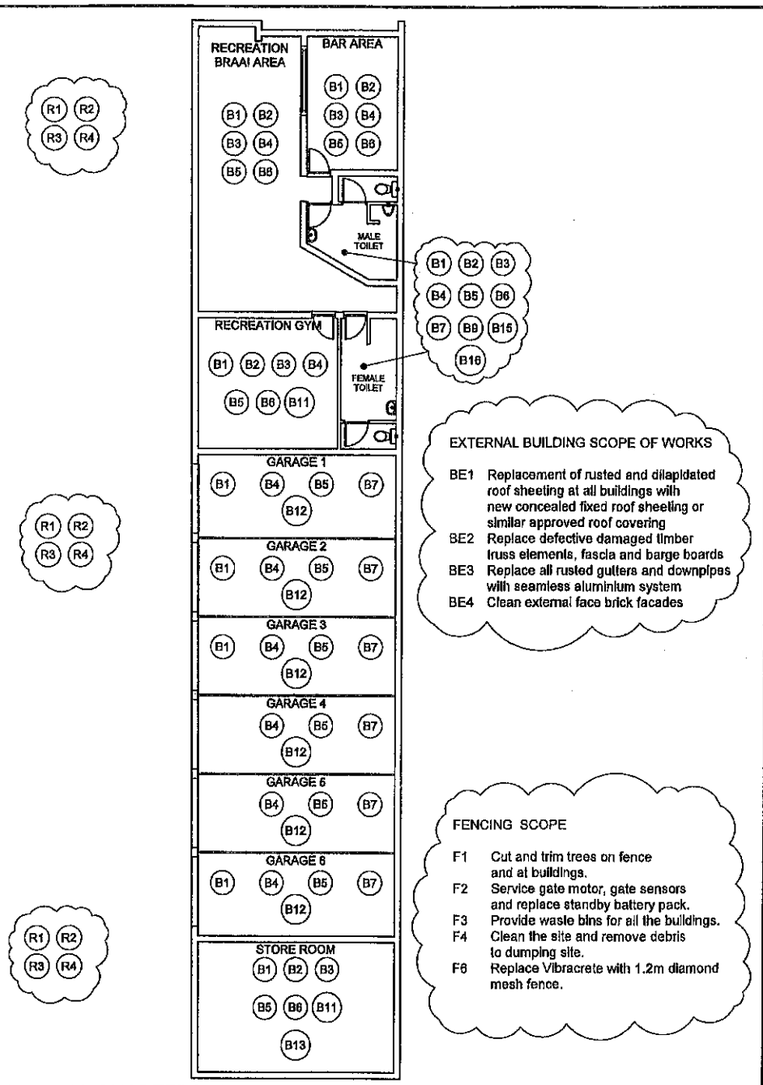

HOUSING QUARTERS: GARAGE, STORES AND RECREACTION AREA
1 : 75

EXTERNAL BUILDING SCOPE OF WORKS

BE1 Replacement of rusted and dilapidated roof sheeting at all buildings with new concealed fixed roof sheeting or similar approved roof covering
BE2 Replace defective damaged timber truss elements, fascia and barge boards
BE3 Replace all rusted gutters and downpipes with seamless aluminium system
BE4 Clean external face brick facades

FENCING SCOPE

F1 Cut and trim trees on fence and at buildings.
F2 Service gate motor, gate sensors and replace standby battery pack.
F3 Provide waste bins for all the buildings.
F4 Clean the site and remove debris to dumping site.
F6 Replace Vibracrete with 1.2m diamond mesh fence.

BUILDING SCOPE

B1 Paint all previously painted surfaces
B2 Replace all damaged ceilings and rotten brandering
B3 Replace damaged doors and door lock sets
B4 Replace broken glazing
B5 Replace missing/damaged ironmongery
B6 Replace missing window stays and pegs
B7 Replace damaged roll-up garage doors
B8 Replacement of perished carpets and vinyl tiles with ceramic tiles

ROADS AND STORMWATER DRAINAGE SCOPE

R1 Localised surface repair on concrete surfaced roads and areas.
R2 Localised repairs of concrete paving damaged by tree roots.
R3 Storm water catch pits and gullies to be repaired and grids replaced.
R4 Replace and repair paving areas and make good by removing roots of trees.

BUILDING SCOPE

B9 Replace damaged vinyl tiles and/or ceramic tiles.
B10 Replace damaged blinds
B11 Remove and re-install tarnished vinyl tinting on windows of western façade
B12 Strip and remove all paint from steel grills, doors and frames and repaint
B13 Replace locksets to security gate at entrances
B14 Replace wall tiles in kitchen and bathrooms
B15 Replace towel rails
B16 Replace toilet roll holder
B17 Replace damaged cupboard doors, pull handles, catches and hinges
B18 Repair damp walls (water ingress as a result of roof leaks)
B19 Replace rusted sink kitchenette units, water damaged wall units and base units
B20 Replace wall tiles in kitchen area
B21 Replace all kitchen cupboards and sink units
B22 Replace timber doors at clothing and linen stores
B23 Install aluminium shower doors

No.	DATE	AMENDMENT	DP/W

Copyright vested in the South African Police Service

as built drawings

AS BUILT DRAWING REQUIREMENTS

name:

date:

professional registration no.:

A1

SOUTH AFRICAN POLICE SERVICE
PROGRAM & PROJECT MANAGEMENT

SAPS DIVISION SCM
FACILITY MANAGEMENT
PRIVATE BAG X 254
PRETORIA
0001

TEL: 012 846 6939
FAX: 012 846 6782

MULTIDISCIPLINARY

APPOINTMENT OF A BUILD ENVIRONMENT PROFESSIONAL TO FULFILL THE ROLE OF A LEAD CONSULTANT: PLANNED REPAIR AND MAINTENANCE PROJECT AT THEUNISSEN POLICE STATION (FREE STATE)

Tender number: Tender No. 19/1/9/1/33 TB (20)

SAPS THEUNISSEN
HOUSING QUARTERS & GARAGES:
BUILDING, ROAD ANS STORMWATER
DRAINAGE SCOPE OF WORKS

Scale: 1 : 100 (A1 SHEET)	Drawn: F SAAYMAN
Date: SEPTEMBER 2020	Checked: J GROBBELAAR

Drawing number: THS/S2/BS-004

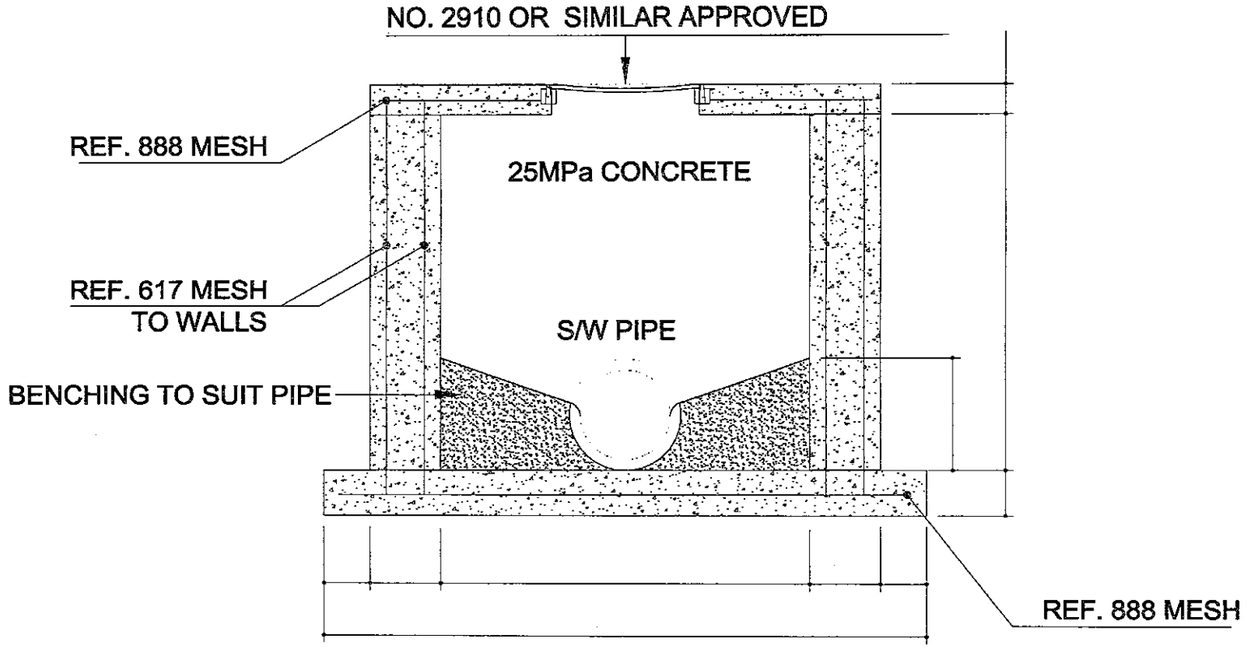

20MPa CONCRETE BENCHING
(CLASS 20/13)

SECTION

75mm 15MPa BLINDING LAYER
TO ALL BASE SOFFITS PLACED
ON 2x150mm G7 LAYERS COM-
PACTED TO 97% MOD AASHTO

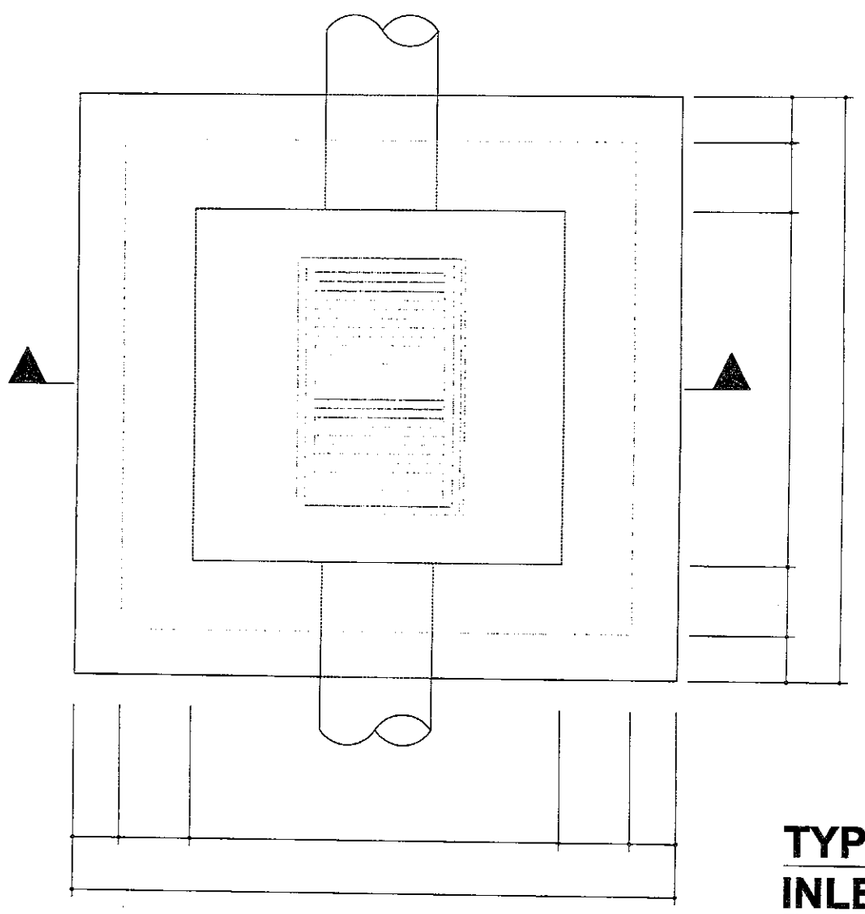

CONCRETE COVER TO ALL REINFORCING IS 40mm
ENSURE FULL MESH EDGE BAR AT 40mm COVER
MESH TO BE BEND INTO BOTTOM AND TOP SLAB

LAYOUT

TYPICAL STORMWATER
INLET BOX DETAIL
N.T.S.

KLIENT CLIENT

SAPS THEUNISSEN
ADMINISTRASTION, SUPPORT
AND CELL BLOCK GROUND FLOOR
AND FIRTST FLOOR PLAN

THS/S7/RS-003

NOTE: PIPE WORK

ALL CONCRETE PIPES TO COMPLY WITH THE REQUIREMENTS OF SANS 667.
PIPE BEDDING TYPE TO BE IN ACCORDANCE WITH SANS 0102.
CLASS FOR ALL CONCRETE PIPES TO BE CLASS 50D.
MINIMUM FILL ON TOP OF ANY PIPE WORK TO BE 300mm.

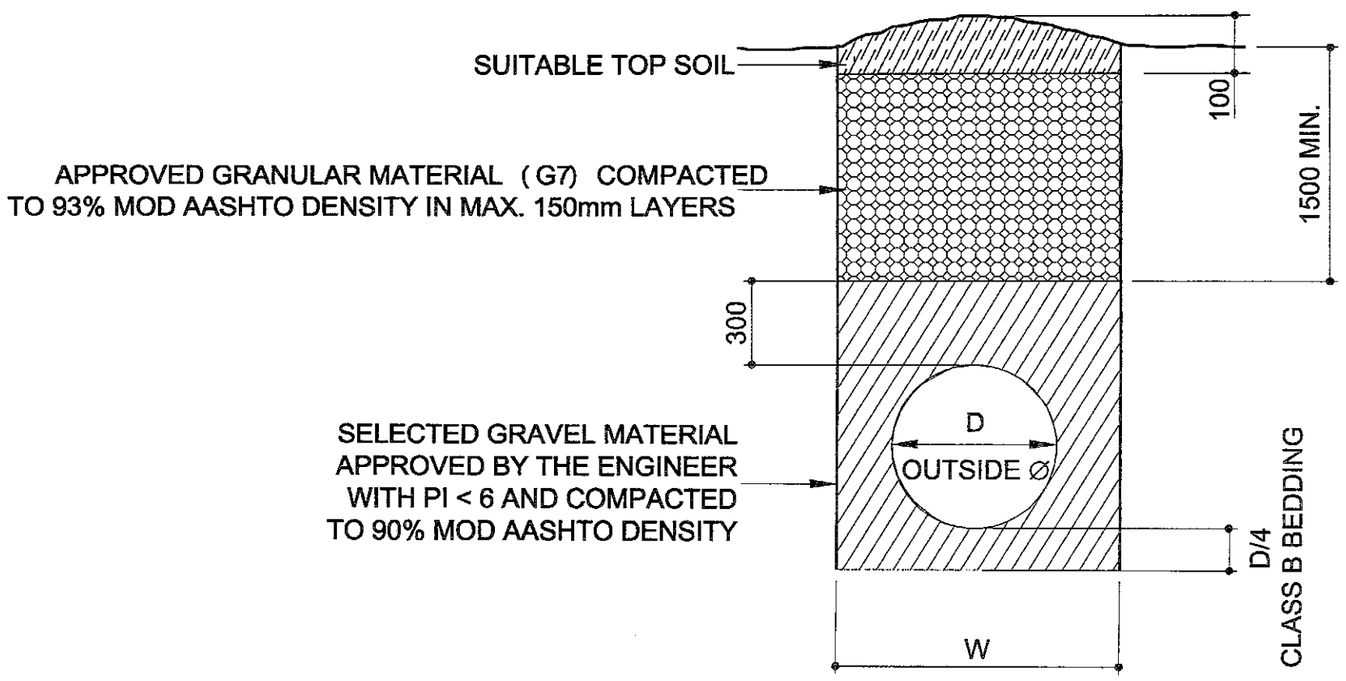

STORMWATER PIPES TO BE SPIGOT & SOCKET: SANS 677			
PIPE NO	PIPE Ø	PIPE CLASS	TRENCH WIDTH (w)
PIPE A	450mm	50D	1150mm
PIPE B	525mm	50D	1250mm
PIPE C	600mm	50D	1350mm
PIPE D	675mm	50D	1450mm
PIPE E	750mm	50D	1650mm

TYPICAL S/W PIPE TRENCH SECTION
N.T.S.

KLIENT CLIENT

SAPS THEUNISSEN
ADMINISTRASTION, SUPPORT
AND CELL BLOCK GROUND FLOOR
AND FIRTST FLOOR PLAN

THS/S7/RS-004

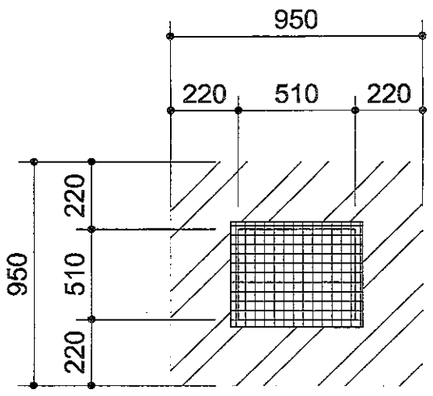

SHAPE ALL SURFACE LEVELS TO CATCHPIT

330mm - LOAD BEARING BRICK WALL WITH BRICK FORCE EVERY LAYER AND DEPTH RANGE 1250mm TO 1750mm. ALSO PROVIDE 3xY6 BARS EVERY 3RD COURSE TO ALL SIDES AND ENSURE OVERLAPPING AT CORNERS.

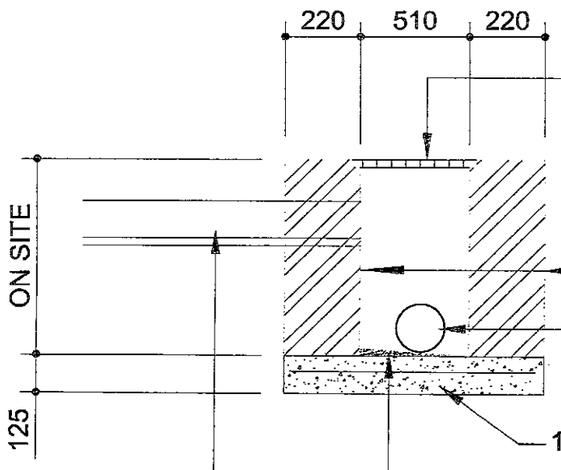

APPROVED COVER
(SAINT GOBAIN PRODUCT NO 02358 - AKSESS 500 OR SIMILAR APPROVED)

220mm - LOAD BEARING BRICK WALL WITH BRICK FORCE EVERY LAYER WITH DEPTH RANGE 0000 TO 1250mm. ALSO PROVIDE 2xY6 BARS EVERY 3RD COURSE TO ALL SIDES AND ENSURE OVERLAPPING AT CORNERS.

300mmø @ 1:100 FALL - CLASS 50D SPIGOT AND SOCKET CONCRETE PIPE

125mm - 25MPa BASE WITH REF. 245 MESH

BENCHING TO SUIT

HALF ROUND CONCRETE STORMWATER DRAINAGE CHANNELS

TYPICAL STORMWATER JUNCTION BOX A DETAIL
N.T.S.

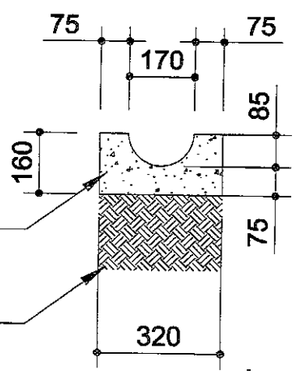

APPROVED PRE-CAST HALF ROUND CHANNEL SECTION

200mm - G7, 1.25% STABILIZED & COMPACTED TO MINIMUM 100KPa

BREAK UP REMOVE AND DISPOSE OF EXISTING CHANNEL SECTIONS.
REMOVE AND DISPOSE OF 200mm DEEP EXISTING CHANNEL SUPPORT MATERIAL.
ENSURE REMAINDER OF IN-SITU MATERIAL DRY.
PLACE 200mm IMPORTED G7 MATERIAL STABILIZED WITH 1.25% ORDINARY PORTLAND CEMENT AND COMPACT TO MINIMUM 100KPa.
PLACE PRE-CAST HALF ROUND CHANNEL SECTIONS OF SIMILAR DIMENSION TO EXISTING. PROVIDE APPROVED WATERPROOF JOINT SEALER TO SECTIONAL JOINS.

TYPICAL DETAIL NSC-01
N.T.S.

KLIENT CLIENT

SAPS THEUNISSEN
ADMINISTRASTION, SUPPORT
AND CELL BLOCK GROUND FLOOR
AND FIRTST FLOOR PLAN

THS/S7/RS-005

600x450mm H/D MANHOLE COVER AND FRAME
AS PER SAINT GOBAIN PRODUCT
NO. 2100 OR SIMILAR APPROVED

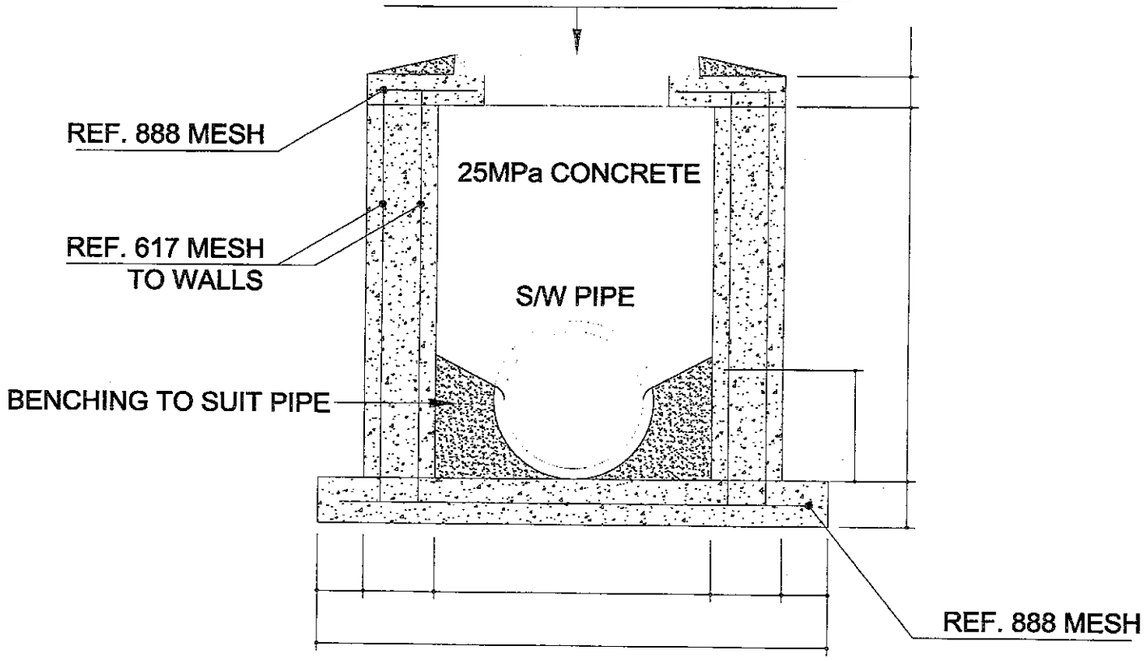

20MPa CONCRETE BENCHING
(CLASS 20/13)

SECTION

75mm 15MPa BLINDING LAYER
TO ALL BASE SOFFITS PLACED
ON 2x150mm G7 LAYERS COM-
PACTED TO 97% MOD AASHTO

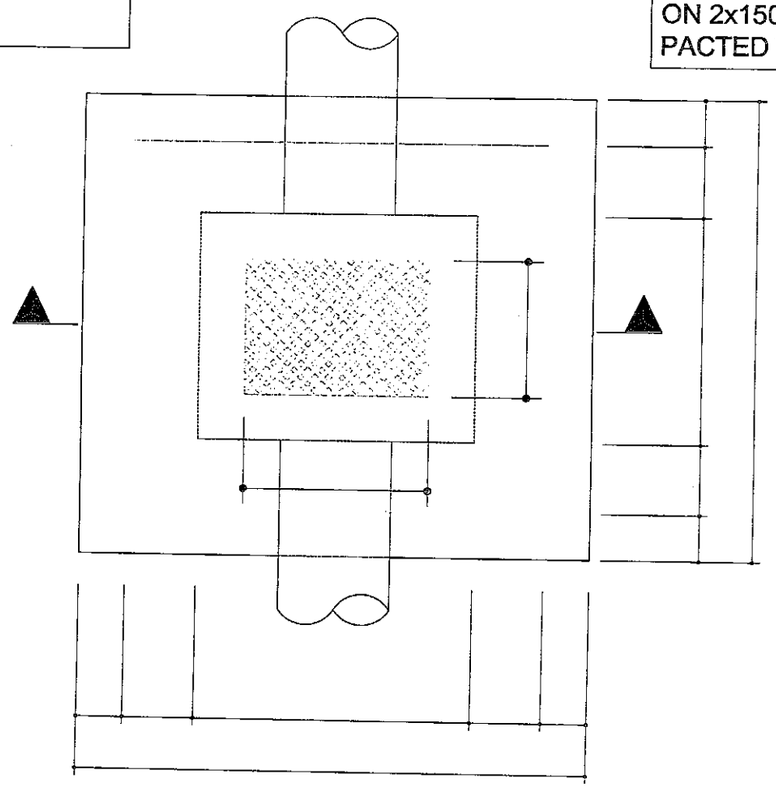

CONCRETE COVER TO ALL REINFORCING IS 40mm
ENSURE FULL MESH EDGE BAR AT 40mm COVER
MESH TO BE BEND INTO BOTTOM AND TOP SLAB

LAYOUT

TYPICAL STORMWATER JUNCTION BOX / MANHOLE
N.T.S.

KLIENT CLIENT

SAPS THEUNISSEN
ADMINISTRASTION, SUPPORT
AND CELL BLOCK GROUND FLOOR
AND FIRTST FLOOR PLAN

THS/S7/RS-007

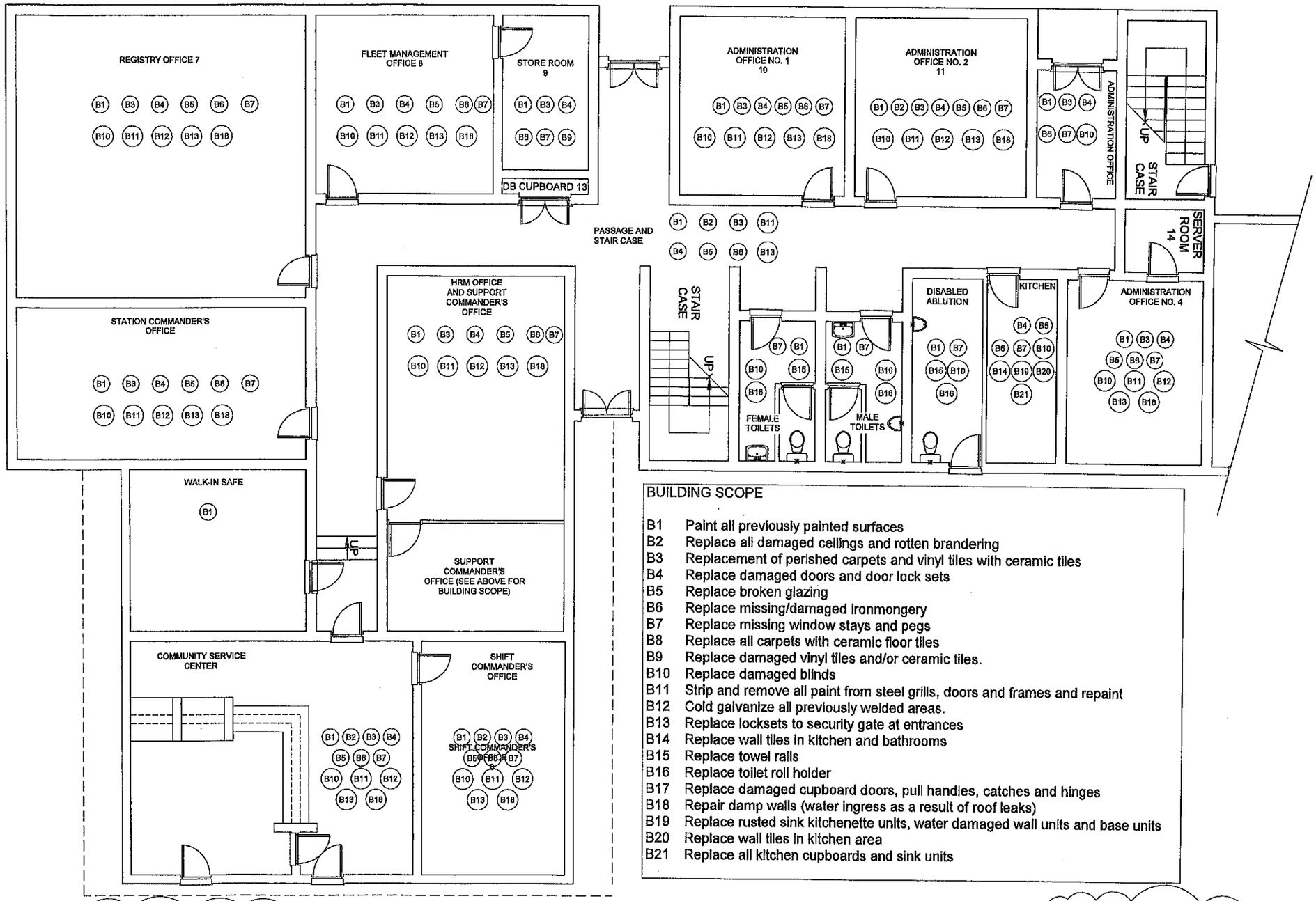

BUILDING SCOPE

B1	Paint all previously painted surfaces
B2	Replace all damaged ceilings and rotten brandering
B3	Replacement of perished carpets and vinyl tiles with ceramic tiles
B4	Replace damaged doors and door lock sets
B5	Replace broken glazing
B6	Replace missing/damaged ironmongery
B7	Replace missing window stays and pegs
B8	Replace all carpets with ceramic floor tiles
B9	Replace damaged vinyl tiles and/or ceramic tiles.
B10	Replace damaged blinds
B11	Strip and remove all paint from steel grills, doors and frames and repaint
B12	Cold galvanize all previously welded areas.
B13	Replace locksets to security gate at entrances
B14	Replace wall tiles in kitchen and bathrooms
B15	Replace towel rails
B16	Replace toilet roll holder
B17	Replace damaged cupboard doors, pull handles, catches and hinges
B18	Repair damp walls (water ingress as a result of roof leaks)
B19	Replace rusted sink kitchenette units, water damaged wall units and base units
B20	Replace wall tiles in kitchen area
B21	Replace all kitchen cupboards and sink units

FENCING SCOPE

F1	Painting of palisade fencing and gates.
F2	Cut and trim trees on fences and at buildings.
F3	Service gate motor, gate sensors and replace standby battery pack.
F4	Provide waste bins for all the buildings.
F5	Clean the site and remove debris to dumping site.

EXTERNAL BUILDING SCOPE OF WORKS

BE1	Replacement of rusted and dilapidated roof sheeting at all buildings with new concealed fixed roof sheeting or similar approved roof covering
BE2	Replace defective damaged timber truss elements, fascia and barge boards
BE3	Replace all rusted gutters and downpipes with seamless aluminium system
BE4	Clean external face brick facades

ADMINISTRATION AND SUPPORT OFFICE BLOCK GROUND FLOOR

1 : 50

No.	DATE	AMENDMENT	D.P.W.

Copyright vests in the South African Police Service

name: _____
date: _____
professional registration: _____

Sheet size: A1

SOUTH AFRICAN POLICE SERVICE
PROGRAM & PROJECT MANAGEMENT

SAPS DIVISION SCM
FACILITY MANAGEMENT
PRIVATE BAG X 254
PRETORIA
0001

TEL: 012 846 9939
FAX: 012 845 6782

MULTIDISCIPLINARY

APPOINTMENT OF A BUILD ENVIRONMENT PROFESSIONAL TO FULFILL THE ROLE OF A LEAD CONSULTANT: PLANNED REPAIR AND MAINTENANCE PROJECT AT THEUNISSEN POLICE STATION (FREE STATE)

Tender Number: Tender No. 19/1/9/1/33 TB (20)

Drawing title: SAPS THEUNISSEN ADMINISTRASTION GROUND FLOOR: BUILDING SCOPE OF WORKS

Scale: 1 : 100 (A1 SHEET)
Drawn: F BAAYMAN
Date: SEPTEMBER 2023
Checked: J JOROSELAAR

Drawing number: THS/S5/CF-001