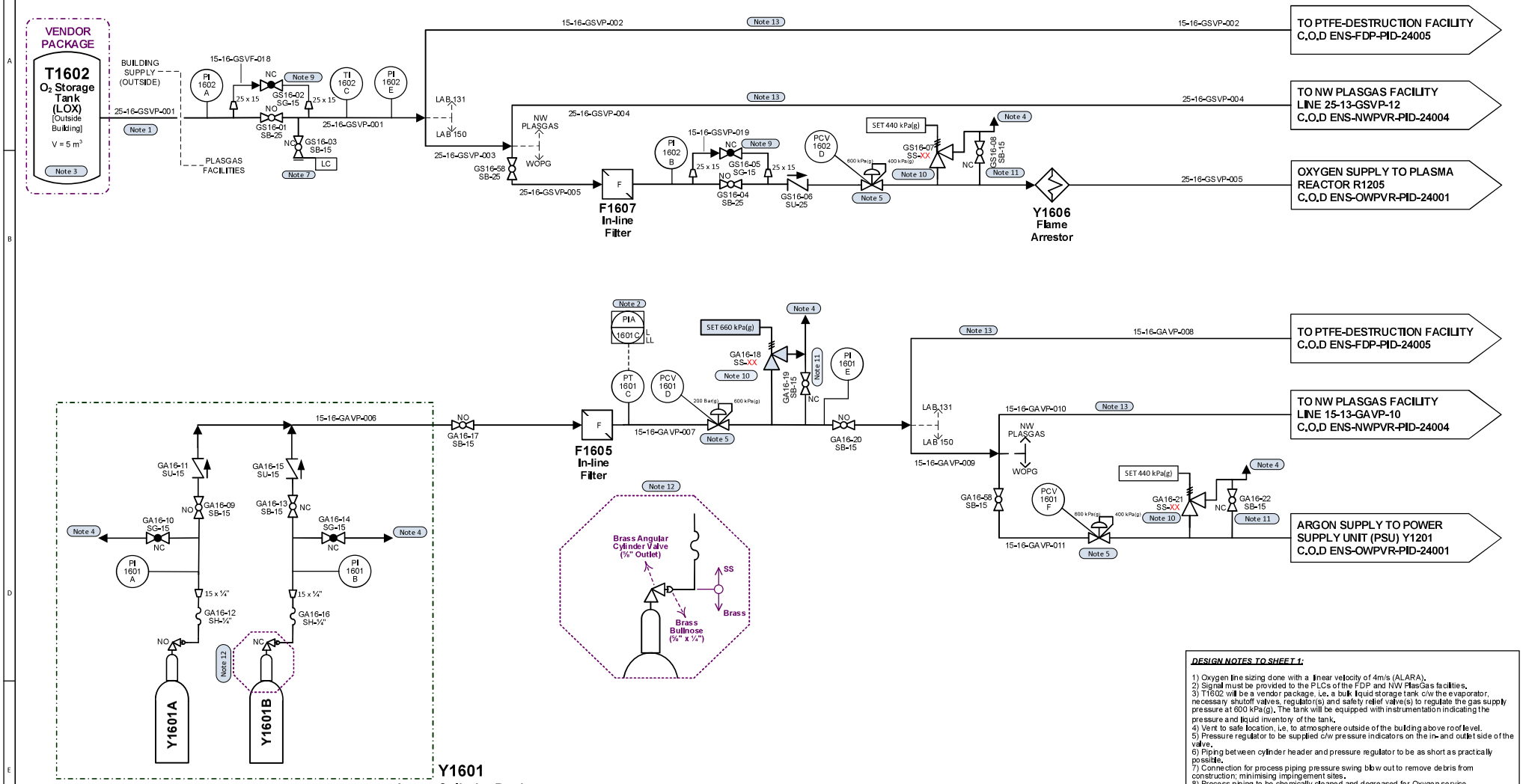

DESIGN NOTES TO SHEET 1:

1) Oxygen line sizing done with a linear velocity of 4m/s (ALARA).
2) Signal must be provided to the PLCs of the FDP and NW PlasGas facilities.
3) T1602 will be a vendor package, i.e. a bulk liquid storage tank c/w the evaporator, necessary shutoff valves, regulator(s) and safety relief valve(s) to regulate the gas supply pressure at 600 kPa(g). The tank will be equipped with instrumentation indicating the pressure and liquid inventory of the tank.
4) Vent to safe location, i.e. to atmosphere outside of the building above roof level.
5) Pressure regulator to be supplied c/w pressure indicators on the in- and outlet side of the valve.
6) Piping between cylinder header and pressure regulator to be as short as practically possible.
7) Connection for process piping pressure swing blow out to remove debris from construction; minimising impingement sites.
8) Process piping to be chemically cleaned and degreased for Oxygen service.
9) Bypass line for slow pressurisation of downstream piping to minimise impingement.
10) Valve size will be determined when Process Protection Calculations are done. The supplier to advise on pressure relief valve size during procurement, based on nozzle area specified by Necsa.
11) Deadman valve.
12) Bullnose c/w fitting to be purchased.
13) Facilities provide their own pressure regulators.

FUNCTION	NAME	DESIGNATION	SIGNATURE
PREPARED	Mr W Ludwick	Senior Process Engineer	
REVIEWED	Mr N Manilal	Process Engineer	
REVIEWED	Mr BM Khumalo	Senior Process Engineer	
REVIEWED	Mr SR Mngoma	Chief Engineer Mechanical	
REVIEWED	Dr G Manuel	Chief Engineer Control & Instrumentation	
REVIEWED	Mr WJ van den Berg	Chief Engineer Electrical	
APPROVED	Dr K Moodley	Chief Process Engineer	

REVISION HISTORY

REV	DESCRIPTION	PREPARED	DATE
0.2	Update of first draft with review comments	W Ludwick	2024/07/03
1	First Issue	W Ludwick	2024/08/01
1.1	Update after BDOR and change in number of cylinders for Argon (6 to 2).	W Ludwick	2024/10/09
2	Second Issue	W Ludwick	2024/10/15
3	Update after Control Review	P Dube	2024/11/26
4	Update after HAZOP 3	P Dube	2025/01/22

LIST OF REFERENCED P&IDs & DOCUMENTS

1) ENS-OWPVR-LST-24004 – Lead Sheet for the PFDs & P&IDs of the WOPG Demonstration Facility
2) ENS-OWPVR-PID-24001 – P&ID for the Plasma Gasification System of the WOPG Demonstration Facility
3) ENS-FDP-PID-24005 – Gas Supply System 833
4) ENS-NWPVR-PID-24004 – NW PlasGas Demonstration Plant Subsystem 13

necsa
We're in your world
South African Nuclear Energy Corporation SOC Limited

COPYRIGHT
This drawing is the property of Necsa and may not, without written permission, be copied, communicated to a third party, or be used either wholly or in part for any purpose other than for which it is supplied.

Classification: CONFIDENTIAL

PROJECT	URANIUM CONTAMINATED WASTE OIL PLASMA GASIFICATION
TITLE	P&ID – GAS SUPPLY SYSTEM (O_2 & Ar)
DRG. NO.	ENS-OWPVR-PID-24003
DRAWN BY	P DUBE
DATE	2025/01/22
	SHEET 1 OF 3

DESTROY ALL PREVIOUS PRINTS

4

REVISION