DEPARTMENT OF WATER AND SANITATION
REPUBLIC OF SOUTH AFRICA

DUE AT 11:00 ON

29 OCTOBER 2026

WTE1067CE

SUPPLY AND DELIVERY OF LOCAL CONTENT PRECAST WINGWALLS FOR MZIMVUBU WATER PROJECT – ACCESS ROAD NEAR MACLEAR IN EASTERN CAPE PROVINCE

SUBMIT COMPLETED BID DOCUMENTS TO:

TO BE DEPOSITED IN:
The bid box at the entrance of
Department Water and Sanitation
Mthatha Dam Office Building
Department of Water and Sanitation
MTHATHA DAM
5100
Co-ordinates: S 31˚33'03'' E 28˚44'35''

Compulsory Briefing Session
Date:21 October 2026
Time:10:00 am
Venue: Ntabelanga Dam Site Camp
Co-ordinates: 31º 9' 38.88" S 28º 33' 0.76" E
-31.122012, 28.683064
Travel route from Mthatha Town: https://maps.app.goo.gl/DqTMBckSQFu5vjta8

BIDDER: **(Company address and stamp)**

COMPILED BY: CONSTRUCTION EAST

DEPARTMENT OF WATER AND SANITATION

WTE1067CE

SUPPLY AND DELIVERY OF LOCAL CONTENT PRECAST WINGWALLS FOR MZIMVUBU WATER PROJECT – ACCESS ROAD NEAR MACLEAR IN EASTERN CAPE PROVINCE

CONTENTS

INVITATION TO BID (SBD 1)

SECTION 1: LEGALITIES

SECTION 2: PRICE QUOTATION DATA

SECTION 3: PRICING SCHEDULE

PART A
INVITATION TO BID

YOU ARE HEREBY INVITED TO BID FOR REQUIREMENTS OF THE (*NAME OF DEPARTMENT/ PUBLIC ENTITY*)					
BID NUMBER:	WTE1067CE	CLOSING DATE:	29 OCTOBER 2026	CLOSING TIME:	11H00
DESCRIPTION	**SUPPLY AND DELIVERY OF LOCAL CONTENT PRECAST WINGWALLS FOR MZIMVUBU WATER PROJECT – ACCESS ROAD NEAR MACLEAR IN EASTERN CAPE PROVINCE**				

BID RESPONSE DOCUMENTS MAY BE SUBMITTED IN BID BOX TO:

SUBMIT COMPLETED BID DOCUMENTS or COURIERED TO:

The bid box at the entrance of
Mthatha Dam Office Building
Department of Water and Sanitation
MTHATHA DAM
5100

BIDDING PROCEDURE ENQUIRIES MAY BE DIRECTED TO		TECHNICAL ENQUIRIES MAY BE DIRECTED TO:	
CONTACT PERSON	**Ms. S Gumede**	**Contact Person**	**Mr N Mbambo**
TELEPHONE NUMBER	**081 017 5365**	**Telephone Number**	**060 475 8171**
E-MAIL ADDRESS	Gumedese@dws.gov.za	E-MAIL ADDRESS	MbamboN@dws.gov.za

SUPPLIER INFORMATION

NAME OF BIDDER					
POSTAL ADDRESS					
STREET ADDRESS					
TELEPHONE NUMBER	CODE			NUMBER	
CELL PHONE NUMBER					
FACSIMILE NUMBER	CODE			NUMBER	
E-MAIL ADDRESS					
VAT REGISTRATION NUMBER					
SUPPLIER COMPLIANCE STATUS	TAX COMPLIANCE SYSTEM PIN:		**OR**	CENTRAL SUPPLIER DATABASE No:	MAAA
B-BBEE STATUS LEVEL VERIFICATION CERTIFICATE	TICK APPLICABLE BOX] ☐ Yes ☐ No		B-BBEE STATUS LEVEL SWORN AFFIDAVIT		[TICK APPLICABLE BOX] ☐ Yes ☐ No

[A B-BBEE STATUS LEVEL VERIFICATION CERTIFICATE/ SWORN AFFIDAVIT (FOR EMES & QSEs) MUST BE SUBMITTED IN ORDER TO QUALIFY FOR PREFERENCE POINTS FOR B-BBEE]

ARE YOU THE ACCREDITED REPRESENTATIVE IN SOUTH AFRICA FOR THE GOODS /SERVICES /WORKS OFFERED?	☐ Yes ☐ No [IF YES ENCLOSE PROOF]	ARE YOU A FOREIGN-BASED SUPPLIER FOR THE GOODS/SERVICE/WORKS OFFERED?	☐ Yes ☐ No [IF YES, ANSWER PART B:3]

QUESTIONNAIRE TO BIDDING FOREIGN SUPPLIERS

IS THE ENTITY A RESIDENT OF THE REPUBLIC OF SOUTH AFRICA (RSA)?	☐ YES ☐ NO
DOES THE ENTITY HAVE A BRANCH IN THE RSA?	☐ YES ☐ NO
DOES THE ENTITY HAVE A PERMANENT ESTABLISHMENT IN THE RSA?	☐ YES ☐ NO
DOES THE ENTITY HAVE ANY SOURCE OF INCOME IN THE RSA?	☐ YES ☐ NO
IS THE ENTITY LIABLE IN THE RSA FOR ANY FORM OF TAXATION?	☐ YES ☐ NO

IF THE ANSWER IS "NO" TO ALL OF THE ABOVE, THEN IT IS NOT A REQUIREMENT TO REGISTER FOR A TAX COMPLIANCE STATUS SYSTEM PIN CODE FROM THE SOUTH AFRICAN REVENUE SERVICE (SARS) AND IF NOT REGISTER AS PER 2.3 BELOW.

PART B
TERMS AND CONDITIONS FOR BIDDING

1. BID SUBMISSION:
1.1. BIDS MUST BE DELIVERED BY THE STIPULATED TIME TO THE CORRECT ADDRESS. LATE BIDS WILL NOT BE ACCEPTED FOR CONSIDERATION.
1.2. **ALL BIDS MUST BE SUBMITTED ON THE OFFICIAL FORMS PROVIDED (NOT TO BE RE-TYPED) OR IN THE MANNER PRESCRIBED IN THE BID DOCUMENT.**
1.3. THIS BID IS SUBJECT TO THE PREFERENTIAL PROCUREMENT POLICY FRAMEWORK ACT, 2000 AND THE PREFERENTIAL PROCUREMENT REGULATIONS 2022, THE GENERAL CONDITIONS OF CONTRACT (GCC) AND, IF APPLICABLE, ANY OTHER SPECIAL CONDITIONS OF CONTRACT.
1.4. **THE SUCCESSFUL BIDDER WILL BE REQUIRED TO FILL IN AND SIGN A WRITTEN CONTRACT FORM (SBD7).**
2. TAX COMPLIANCE REQUIREMENTS
2.1 BIDDERS MUST ENSURE COMPLIANCE WITH THEIR TAX OBLIGATIONS.
2.2 BIDDERS ARE REQUIRED TO SUBMIT THEIR UNIQUE PERSONAL IDENTIFICATION NUMBER (PIN) ISSUED BY SARS TO ENABLE THE ORGAN OF STATE TO VERIFY THE TAXPAYER'S PROFILE AND TAX STATUS.
2.3 APPLICATION FOR TAX COMPLIANCE STATUS (TCS) PIN MAY BE MADE VIA E-FILING THROUGH THE SARS WEBSITE WWW.SARS.GOV.ZA.
2.4 BIDDERS MAY ALSO SUBMIT A PRINTED TCS CERTIFICATE TOGETHER WITH THE BID.
2.5 IN BIDS WHERE CONSORTIA / JOINT VENTURES / SUB-CONTRACTORS ARE INVOLVED; EACH PARTY MUST SUBMIT A SEPARATE TCS CERTIFICATE / PIN / CSD NUMBER.
2.6 WHERE NO TCS PIN IS AVAILABLE BUT THE BIDDER IS REGISTERED ON THE CENTRAL SUPPLIER DATABASE (CSD), A CSD NUMBER MUST BE PROVIDED.
2.7 NO BIDS WILL BE CONSIDERED FROM PERSONS IN THE SERVICE OF THE STATE, COMPANIES WITH DIRECTORS WHO ARE PERSONS IN THE SERVICE OF THE STATE, OR CLOSE CORPORATIONS WITH MEMBERS PERSONS IN THE SERVICE OF THE STATE."

NB: FAILURE TO PROVIDE / OR COMPLY WITH ANY OF THE ABOVE PARTICULARS MAY RENDER THE BID INVALID.

SIGNATURE OF BIDDER: ……

CAPACITY UNDER WHICH THIS BID IS SIGNED: ……
(Proof of authority must be submitted e.g. company resolution)

DATE: ……

DEPARTMENT OF WATER AND SANITATION

WTE1067CE

SUPPLY AND DELIVERY OF LOCAL CONTENT PRECAST WINGWALLS FOR MZIMVUBU WATER PROJECT – ACCESS ROAD NEAR MACLEAR IN EASTERN CAPE PROVINCE

SECTION 1: LEGALITIES

CONTENTS

1. Instructions to Suppliers
2. Declaration of Interest (SBD 4)
3. Preference Points Claim in terms of the Preferential Procurement Regulation, 2022 (SBD 6.1)
4. Instructions to Suppliers: Purchases (Annexure 7)
5. General conditions of contract

1. INSTRUCTIONS TO BIDDERS

CONTENTS

1. Issuing of documents
2. Queries with respect to this bid
3. Completion of Bids
4. Submission of Bids
5. Signature on Bids
6. General Conditions of Contract
7. Bids to comply with documents
8. Telegraphic bids
9. The Department's right to decline any bid
10. Department is not liable for bidder’s expenses
11. Payments made under this contract
12. Evaluation Criteria
13. Rejection of bids
14. Results of bids

INSTRUCTIONS TO BIDDERS

1. ISSUING OF DOCUMENTS

(a) 1. A complete set of bid documents is issued to a list of prospective Bidders, sourced from National Treasury's Central Supplier Database.

2. Bid documents for bids advertised on CIDB will be made available on written request via E-mail.

3. A complete set of bid documents can be downloaded from E-Portal for the bids advertised on E-Portal

(b) Bidders must satisfy themselves that the document is complete and conform to the index of this document. Should any figures or writing be indistinct or should any pages be missing from this document or should this document or the drawing(s) contain any obvious errors, the Bidders must immediately notify the Department in order to have any discrepancy rectified or clarified before submitting his bid. Such clarification will be valid only if made by the Department by means of formal amendment as described hereunder prior to the date of submission of bids. The Department may issue amendments to clarify or modify the Bid Documents. A copy of each amendment will be issued to each bidder and shall be acknowledged on the form issued with the amendments. No claim whatsoever will be entertained for faults in the bid price resulting from the above-mentioned discrepancies.

(c) No alterations, omissions or additions shall be made to this document, but should it be deemed necessary to do so, the Bidder is at liberty to qualify his bid.

(d) All Bidders shall be deemed to have waived, renounced and abandoned any conditions printed or written upon any stationery used by them for the purpose of or in connection with the submission of bids which are in conflict with the conditions laid down in this document.

(e) Only locally produced or locally manufactured **cement material** from local raw material or input will be considered for this bid. The stipulated minimum threshold for local production and content for ,cement sector is 100%.

2. QUERIES WITH RESPECT TO THIS BID

Queries of a specific administration nature should be directed to Ms. Senzy Gumede in writing to: SCM Office, Department of Water and Sanitation Gumedese@dws.gov.za or telephonically on 081 017 5365.

Queries of a specific technical nature should be directed to Mr: N Mbambo in writing to: MbamboN@dws.gov.za, Cell: 060 475 8171

3. COMPLETION OF BIDS

(a) The bid must be signed on the Invitation to Bid form (SBD 1) annexed hereto with all blanks in the bid and the appendix filled in.

(b) All spaces in the bid forms and other annexures shall be completed in full.

(c) Section 3 in the bid document and the Pricing Schedule must be fully completed and priced out by the bidder. Failure to do so will deem your bid invalid.

(d) The bid documents shall not be separated in any way nor must any pages be detached from the original documents.

4. SUBMISSION OF BIDS

The Bid Document shall be completed, signed and submitted as follows:

(a) The original Bid, together with a covering letter and supporting documents, shall be sealed in an envelope endorsed:

"Original Bid**:WTE1067CE- SUPPLY AND DELIVERY OF LOCAL CONTENT PRECAST WINGWALLS FOR MZIMVUBU WATER PROJECT – ACCESS ROAD NEAR MACLEAR IN EASTERN CAPE PROVINCE**

and the name of the Bidder shall be clearly shown.

(b) Bids sealed and endorsed as above, will be deposited in the bid box at the entrance of the Mthatha dam Office Building, Department of Water and Sanitation, Mthatha Dam and not later than 11:00 on the date stipulated on the front cover of this document.

5. SIGNATURE ON BIDS

The Bid, if by an individual, must be signed by that individual or by someone on his behalf duly authorised thereto and proof of such authority must be produced. If the bid is by a Company it must be signed by a person duly authorised thereto by a Resolution of a Board of Directors a copy of which Resolution, duly certified by the Chairman of the Company is to be submitted.

If the bid is submitted by joint venture of more than one person and/or Companies and/or firms it shall be accompanied by the following:

(a) The original or a notarially certified copy of the original document under which such joint venture was constituted which must define precisely inter alia the conditions under which the joint venture will function, its period of duration and the participation of the several constituent persons and/or companies and/or firms.

(b) A certificate signed by or on behalf of each participating person and/or company and/or firm authorising the person who signed the bid to do so.

6. GENERAL CONDITIONS OF CONTRACT

The General Conditions of Contract (National Treasury 2010), as attached shall be regarded as an integral part of the contract documents.

7. BIDDERS TO COMPLY WITH DOCUMENTS

Where applicable, Bidders must allow in their Bids for all labour, material, machinery and everything necessary for the execution and completion of the Contract in accordance with the bid documents. No alterations may be made in the Invitation to Bid, Schedule of Quantities or other documents and the bid will be deemed to comply entirely with the terms of the documents.

8. TELEGRAPHIC BIDS

No bid forwarded by telegram, telex, facsimile will be considered.

9. THE DEPARTMENTS RIGHT TO DECLINE ANY BID

The Department does not bind itself to accept the lowest or any bid.

10. DEPARTMENT NOT LIABLE FOR BIDDER'S EXPENSES

The Department will not be held liable for any expenses incurred in preparing and submitting bids.

11. PAYMENTS UNDER THE CONTRACT

All payments due to the Bidder in terms of the contract will be done by means of Electronic Fund Transfer. Bid price must be firm.

12. EVALUATION CRITERIA

Bids will be evaluated in accordance with the new Preferential Procurement Regulations, 2022, using 80/20 preference points system as prescribed in the Preferential Procurement Policy Framework Act (PPPFA, Act 5 of 2000. The lowest acceptable bid in terms of value will score 80 points for price and a maximum of 20 points will be awarded for attaining the Broad-Based Black Economic Empowerment (B-BBEE) Status Level of Contribution.

Bid proposals will be evaluated based on the 80/20 preference points where a maximum of 80 points will be awarded in respect of price and a maximum of 20 points will be awarded for goals.

13. AWARD CONDITION: OBJECTIVE CRITERIA

- In terms of section 2(1) (f) of the PPPFA, the state may award a contract to a tenderer that did not score the highest points.
- With the above provision, a tender may be awarded to a bidder offering goods that meet the local content requirements than the tenderer scoring the highest points.
- A letter from the local manufacturer confirming local production and content outlining types and sizes of the items to be provided must be submitted.
- The stipulated minimum threshold percentage for local production and content of **cement material is 100%** as stipulated by the Department of Trade, Industry and Competition (**the dtic**) is applicable.
- An exemption letter from **the dtic** must be obtained as per the exemption process followed by **the dtic** for items or materials that are imported and in cases whereby local content requirements cannot be met for various reasons (see exemption process followed by the dtic).

The evaluation of bids will be conducted in four (4) phases as follows:

- **Phase 1: Mandatory Requirements**
- **Phase 2: Administrative Compliance**
- **Phase 3: Technical Evaluation and Specification Compliance**
- **Phase 4: Preference Points system**

Phase 1:
Mandatory Requirements

- Failure to complete, sign and submit the documents listed in table 1 below will render your bid non-responsive and will be disqualified.

- Failure to attend compulsory site briefing listed in table 1 below will render your bid non-responsive and will be disqualified.

Table 1

No	Criteria	Yes	No
1.	Compulsory site briefing session attendance		
2.	Complete, sign, submit SBD 1, SBD 3.1, SBD 4.		

Phase 2: Administrative Compliance

Bidders are required to comply with the following listed below

Table 2

No	Criteria	Yes	No
1.	Complete, sign, and submit SBD 6.1 according to PPR 2022. (failure to submit, the Bidder will forfeit the preferential points to be claimed).		
2.	Companies must be registered and compliant with National Treasury's Central Supplier Database.		
3.	Companies must be tax compliant with SARS (to be verified through CSD and SARS).		
4	Companies must be actively registered with Company Intellectual Property Commission (to be verified through CSD and CIPC).		
5.	Submit a certified copy of B-BBEE Status Level Verification Certificate / Sworn affidavit must be submitted with the bidding documents. (failure to submit, the Bidder will forfeit the preferential points to be claimed		
6.	The stipulated minimum threshold percentage for local production and content for the different types of **wingwalls and toes must be 100%** as per stipulated by the Department of Trade and Industry (DTi) is applicable. Please inform yourself of the stipulated minimum threshold percentage of the specific item(s) as per the specifications. Annexure C need to be complete.		
7.	Sign and submit Annexure C (Local Production and Content) with bidding document.		
8.	Complete, sign and submit annexure 1 and 2 (Stamp by the local commissioner of oath) (failure to submit, the Bidder will forfeit the preferential points to be claimed).		

Phase 3:
Technical Evaluation and Specification Compliance

Compliance requirements:

- Indicate by marking the relevant column to confirm specification compliance. A bidder who fails to comply with the specification requirements as described in section 2 of this document will be disqualified and not considered for further evaluation.

Table 3

ITEM	QTY	DESCRIPTION	COMPLY	NON-COMPLY
1.	70	600 Single Wingwall Shell(Type S1)		
2.	70	300-600 Single Wingwall Toe(Std S1)		
3.	8	600 Double Wingwall Shell(Type D1)		
4.	8	300-600 Double Wingwall Toe(Std D1)		
5.	2	750 Single Wingwall Shell(Type S2)		
6.	6	675-900 Single Wingwall Toe(Std S2)		
7.	4	900 Single Wingwall Shell(Type S2)		
8.	sum	Transport		

Note: Phase 3, Table 3 must be completed in full and Section 2 (Price quotation data) must be signed

Phase 4:
Preference Points system

The bid will be awarded in terms of Regulation 4: Preferential Procurement Regulations, 2022 pertaining to the Preferential Procurement Policy Framework Act, 2000 (Act 5 of 2000).

Bid proposals will be evaluated based on the 80/20 preference points where a maximum of 80 points will be awarded in respect of price and a maximum of 20 points will be awarded for goals.

Points claimed will be according to a bidder's specific goals claimed as indicated in Table 4 below.

Table 4: Specific goals for the tender and points allocation are indicated as per the table below:

In terms of Regulation 4(2); 5(2) of the Preferential Procurement Regulations, preference points must be awarded for specific goals stated in the tender. For the purposes of this bid the bidder will be allocated points based on the bidder's goals claimed as per table 4. Bidder's goal claimed must be supported by proof/ documentation stated as per table 5 and the special conditions of this bid where applicable:

Table 4

The specific goals allocated points in terms of this tender	Number of maximum points allocated (80/20 system)	Bidder's points claimed for specific goals (To be completed by Bidder)
Women Ownership	**5**	
Disability Ownership	**5**	
Youth Ownership	**5**	
Location of enterprise (local equals province) Eastern Cape Province	**2**	
B-BBEE status level contribution from level 1 to 2 which are QSE or EME	**3**	
TOTAL SCORED POINTS	**20**	

Specific goals" means specific goals as contemplated in section 2(1)*(d)* of the PPPFA Act which may include contracting with persons, or categories of persons, historically disadvantaged by unfair discrimination on the basis of race, gender and disability including the implementation of programmes of the Reconstruction of Development Programme as published in *Government Gazette* No. 16085 date 23 November 1994.

"Ownership" means the percentage ownership and control, exercised by individuals within an enterprise.

"Disability" means, in respect of a person, a permanent impairment of a physical, intellectual, or sensory function, which results in restricted, or lack of, ability to perform an activity in the manner, or within the range, considered normal for a human being.

i. A blind person (in terms of the Blind Persons Act, 1968 (Act no.26 of 1968);
ii. A deaf person, whose hearing is impaired to such an extent that he/she cannot use it as a primary means of communication;
iii. A person who, as a result of permanent disability, requires a wheelchair, caliper or crutch to assist him/her to move from one place or another;
iv. A person who requires an artificial limb; or
v. A person who suffers from a mental illness (in terms of the Mental Health Act, 1973 (Act no. 18 of 1973).

"Youth" means, in respect of a person younger than 35 years of age.

"Location of enterprise" Local equals province. Where a project cuts across more than one province, the bidder may be located in any of the relevant provinces to claim and be allocated the points.

Women, disability, and youth will be measured by calculating the pro-rata percentage of ownership of the bidding company which meets the criterion. E.g., Company A has five shareholders each of whom own 20% of the company. Three of the five shareholders meet the criterion, i.e., they are women/disability/youth. Therefore, this bidder will obtain 60% of the points allowable for this goal.

Table 5: Documents required for verification of Bidder's claimed points

Documents/ information listed on the below table 5 must be submitted to support and verify points claimed as per table 4 above.

Table 5: Documents required for verification of Bidder's claimed points

Table 5

Specific Goal	Requires Proof Documents
Ownership by Women	Completed Percentage Ownership Affidavit (Annexure 1)
Ownership by people with disabilities	
Ownership by Youth	
Location of enterprise – Eastern cape	Completed Location of Enterprise Affidavit (Annexure 2) and proof of such premises
B-BBEE status level1 or level 2 contributors who are Exempted Mico Enterprise or Qualifying Small Enterprise	B-BBEE verification certificate issued by a verification agency accredited by South African National Accreditation Agency (SANAS0 or in the case of an EME or a QSE, if permitted in terms of the relevant cade, a duly completed sworn affidavit on the relevant and appropriate form.

Failure on the part of a bidder to submit proof of documentation required in terms of this tender to claim specific goals with the bid, will be interpreted to mean that preference points for specific goals are not claimed and will not be allocated.

13. REJECTION OF BID

Bids not complying with the above-mentioned requirements and specifications may be regarded as incomplete and may not be considered.

14. RESULTS OF BIDS

Results of non-acceptance of bids will be sent to individual unsuccessful bidders in due course.

PREFERENCING SCHEDULE IN TERMS OF THE PREFERENTIAL PROCUREMENT REGULATIONS 2022

NB: BEFORE COMPLETING THIS FORMS, TENDERERS MUST STUDY THE GENERAL CONDITIONS, BIDDERS MUST STUDY THE CONDITIONS: DEFINITIONS AND DIRECTIVES APPLICABLE IN RESPECT OF THE TENDER AND PREFERENTIAL PROCUREMENT REGULATIONS, 2022

1 Preference

Preferences shall be granted in respect of the following:

1.1 Ownership by women, people with disabilities and youth

The percentage shareholding of an enterprise as at the closing time for submissions of natural persons who are women, people with disabilities or youth as evidenced by:

a) voting rights that are not subject to any limitation; and

b) economic interest.

Whereby
people with disabilities are people who have a long-term or recurring physical or, mental, intellectual or sensory impairment which, in interaction with various barriers, may substantially limit their prospects of entry into, or advancement in, employment

youth are people aged between 14 and 35

1.2 Local enterprise

An enterprise which operates from a building together with its land and outbuildings located within the boundaries of the. . . . . ., ... or . . . . . Province as at the closing time for submissions

1.3 B-BBEE status level contributors from level 1 or level 2 who are Exempted Micro Enterprises or Qualifying Small Enterprises

The status of an enterprise is measured in accordance with the provisions of **an applicable code of good practice** issued in terms of Section 9(1) of the B-BBEE Act of 2003 at the closing time for submissions.

Note: The Construction Sector Code applies to the B-BBEE compliance measurement of all entities that fall within the Construction Sector i.e. all enterprises that derive more than 50% of their annual Revenue from Construction Related Activities.

1. Conditions associated with the granting of preferences

Tenderers who claim a preference shall provide in support of their claim the following in relation to their claim, failing which their claims for preferences will be rejected:

Preference applied for	Verification document
Ownership by women	Completed Percentage Ownership Affidavit (Annexure 1)
Ownership by people with disabilities	
Ownership by youth	
Location of enterprise	Completed Location of enterprise affidavit (Annexure 2) and proof of ownership of premises or a valid rental agreement with the owner of such premises
B-BBEE status level of contributor	B-BBEE Verification Certificates issued by a verification agency accredited by the South African National Accreditation System (SANAS) (see www.sanas.co.za/Pages/index.aspx) or, in the case of an Exempted Micro Enterprise or a Qualifying Small Enterprise, if permitted in terms of the relevant code, a duly

	completed sworn affidavit on the relevant and appropriate form obtained from one the following websites: ○ www.thedtic.gov.za/wp-content/uploads/BEE_Affidavit-QSE-Gen.pdf ○ www.thedtic.gov.za/wp-content/uploads/BEE_Affidavit-EME-Gen.pdf ○ www.abp.org.za/wp-content/uploads/2018/03/Final-CSC-EME-Affidavit-March-2018-2.pdf

2. Preferences points offered and claimed

The preference points offered by the Employer in accordance with the provisions of the Preferential Procurement Policy Framework Act of 2022 and claimed by the tenderer are as follows:

Preference claimed		**Number of preference points allocation**		**Preference claimed** (tick relevant block)
		90/10 preference points system	**80/20 preference points system**	
Ownership	by women	Up to 2	Up to 5	
	by people with disabilities	Up to 2	Up to 5	
	by youth	Up to 2	Up to 5	
Location of enterprise	*[insert provinces where project is located]*	1	2	
B-BBEE status	Level 1 or level 2 contributors who are Exempted Micro Enterprises or Qualifying Small Enterprises	3	3	

where points claimed for ownership are calculated separately for each type of ownership in terms of the following formula:

90 / 10 preference points system: NO = 2 x PS / 100
80 / 20 preference points system: NO = 5 x PS / 100

Whereby

NO = number of points awarded to tenderer claiming a preference for ownership by women, people with disabilities or youth

PS = percentage shareholding by women, people with disabilities or youth as declared in the Percentage Ownership Affidavit

3. Declaration

The undersigned, who warrants that he/she is duly authorized to do so on behalf of the tenderer, confirms that he/she understands the conditions under which such preferences are granted and confirms that the tenderer satisfies the conditions pertaining to the granting of tender preferences which are claimed.

Signature: .....

Name: .....

Duly authorised to sign on behalf of: .....

Telephone: ..... Date: .....

Name of witness: ..... Signature of witness: .....

Note: Failure to complete the declaration will lead to the rejection of a claim for a preference.

ANNEXURE 1: Percentage Ownership Affidavit

I, the undersigned,

Full name and surname . . . . . .

Identity number . . . . . .

hereby declare under oath that

1) I am a member / director / owner of the enterprise:

Name: . . . . . .

Trading name, if applicable . . . . . .

Registration number: . . . . . .

Physical address: . . . . . .

. . . . . .

in which the following natural persons who are women, people with disabilities or youth at the time of the tender submission have

a) voting rights that are not subject to any limitation; and

b) economic interest.

as indicated below

Name	Economic interest (%)			Identity number
	Women	People with disabilities	Youth	

Where:

people with disabilities are people who have a long-term or recurring physical or, mental, intellectual or sensory impairment which, in interaction with various barriers, may substantially limit their prospects of entry into, or advancement in, employment

Note: The Code of Good Practice on Employment of Persons with Disabilities (2015) considers "substantially limit" as "*if in its nature, duration or effects it substantially limits the person's ability to perform the essential functions of the job for which they are being considered"* and points out that *"some impairments"* are so easily controlled, corrected or lessened that they have no limiting effects.

youth are people aged between 14 and 35

2) the contents of this statement are to the best of my knowledge a true reflection of the facts;

3) I know and understand the contents of the affidavit, and I have no objection to take the prescribed oath binding on my conscience and on the Owners of the Enterprise which I represent in this matter.

Deponent signature: **Date:**

Commissioner of oaths
Signature and stamp

Annexure 2: Location of enterprise affidavit

I, the undersigned,

Full name and surname . . . . . .

Identity number . . . . . .

hereby declare under oath that

1) I am a member / director / owner of the enterprise:

   Name: . . . . . .

   Trading name, if applicable . . . . . .

   Registration number: . . . . . .

   Physical address: . . . . . .

   . . . . . .

   which is an enterprise which operates from a building together with its land and outbuildings located within the boundaries of the Eastern Cape Province as at the closing time for submissions;

2) the contents of this statement are to the best of my knowledge a true reflection of the facts;

3) I know and understand the contents of the affidavit, and I have no objection to take the prescribed oath binding on my conscience and on the Owners of the Enterprise which I represent in this matter.

Attach proof of ownership of premises or a valid rental agreement with the owner of such premises

Deponent signature: **Date:**

Commissioner of oaths
Signature and stamp

ANNEXURE 7

DEPARTMENT OF WATER AND SANITATION

INSTRUCTIONS TO BIDDERS: PURCHASES

1. The standard bidding forms should not be retyped or redrafted.

2. Should standard bid forms not be filled in by means of mechanical devices, for example typewriters, black ink must be used to fill in bids.

3. Bidders shall check the numbers of the pages and satisfy themselves that none are missing or duplicated. No liability shall be accepted in regard to claims arising from the fact that pages are missing or duplicated.

4. The specifications form an integral part of the bid document and bidders shall indicate in the space provided whether the items offered are to specification or not.

5. In respect of the paragraphs where the items offered are strictly to specification, bidders shall insert the words "as specified".

6. In cases where the items are not to specification, the deviations from the specifications shall be indicated.

7. The bid prices shall be given in the units shown and must be firm.

8. With the exception of basic prices, where required, all prices shall be quoted in South African currency.

9. Delivery basis:

   (a) Supplies which are held in stock or are in transit or on order from South African manufacturers at the date of bid, shall be offered on a basis of delivery into consignee's store or on his site within the free delivery area of the bidder’s centre, or carriage paid consignee's station if the goods are required elsewhere.

   (b) Notwithstanding the provisions of paragraph 9(a), bid prices for supplies in respect of which installation/erection/assembly is a requirement, shall include ALL costs on a basis of delivered on site as specified.

10. Unless specifically provided for in the bid document, no bids transmitted by telegram, telex, facsimile, or similar apparatus shall be considered.

11. Bids received after the closing date and time are late and will as a rule not be accepted for consideration.

12. Bids will be opened in public, that is, bidders or their representatives may be present. If requested by any bidder, the names of bidders and if practical the total amount of each bid, will be read aloud.

13. The period for which offers are to remain valid and binding is indicated in the bid documents and is calculated from the closing date on the understanding that offers are to remain in force and binding until the close of business on the last day of the period calculated and if this day falls on a Saturday, Sunday or public holiday, the bid is to remain valid and binding until the close of business on the following working day.

14. These conditions (ANNEXURE 7) form part of the bid and failure to comply therewith may invalidate a bid.

15. Bidders are requested to promote local content optimally. Bidders who use locally manufactured components, products, equipment and systems, must complete the Departmenbt Declaration for Annexure C (Local Production and Content)

16. After public opening of bids, information relating to the examination, clarification and evaluation of bids and recommendations concerning awards will not be disclosed to bidders or other persons not officially concerned with the process, until the successful bidder is notified of the award. The bid documentation of bidders is considered to be confidential and will under no circumstances be made available to other bidders or other persons.

17. The financial standing of bidders and their ability to manufacture or to supply goods or to render a service may be examined before their bids are considered for acceptance.

18. The Department may, where a bid relates to more than one item, accept such bid in respect of any specific item or items and also accept part of the specified quantity of any specific item or items.

19. The Department is not obliged to accept any bid. The evaluation of a bid will be done in accordance with the Preferential Procurement Policy Framework Act, 2000 (Act no. 5 of 2000) and its regulations.

20. After approval of the bid, both parties must sign a written contract.

21. Failure of the successful bidder to sign the Contract Form in ink may result in the invalidation of their bid.

DEPARTMENT OF WATER AND SANITATION

WTE1067CE

SUPPLY AND DELIVERY OF LOCAL CONTENT PRECAST WINGWALLS FOR MZIMVUBU WATER PROJECT – ACCESS ROAD NEAR MACLEAR IN EASTERN CAPE PROVINCE

SECTION 2: PRICE QUOTATION DATA

CONTENTS

1. STIPULATIONS

STIPULATIONS

1.	**SERVICE**
1.1	The service to be rendered is the: **Supply and delivery of local content PRECAST WINGWALS to Mzimvubu Water Project -Access Road near Maclear in the Eastern Cape Province** As more fully specified hereunder.
2.	**SITE**
2.1	Department of Water and Sanitation Construction East Site Office Mzimvubu Water Project Eastern Cape Province Coordinates: 31º 9' 38.88" S 28º 33' 0.76" E -31.122012, 28.683064
3.	**STANDARDS, SPECIFICATIONS AND DEFINITIONS APPLICABLE**
	Concrete • All precast concrete products to comply with SANS 986, SANS 1200, SANS 927, SANS 677, SANS 10400, and all relevant specification. • Appearance for all concrete product units - All units to be free from cracks, free from visible twist and dents. No patching of defective surfaces or edges. The colour of all products should be uniform
4.	**CLASSIFICATION OF PRECAST WINGWALS AND TOES**
	4.1 Precast wingwalls a • Standard hole openings to fit standard interlocking joint concrete pipes • Concrete wingwalls to come complete with a slab and a toe 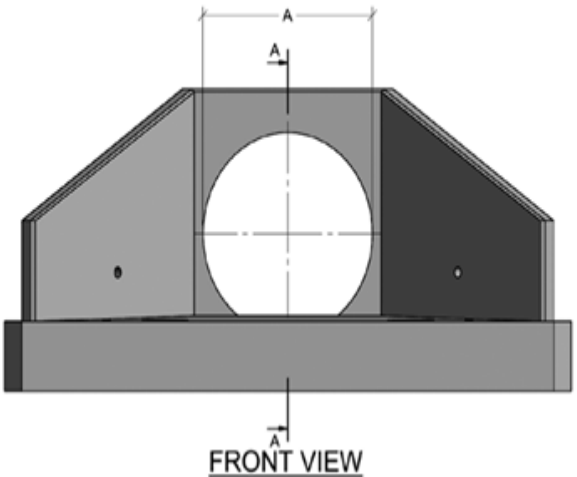 FRONT VIEW 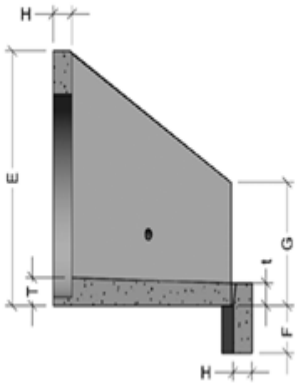 SECTION A-A 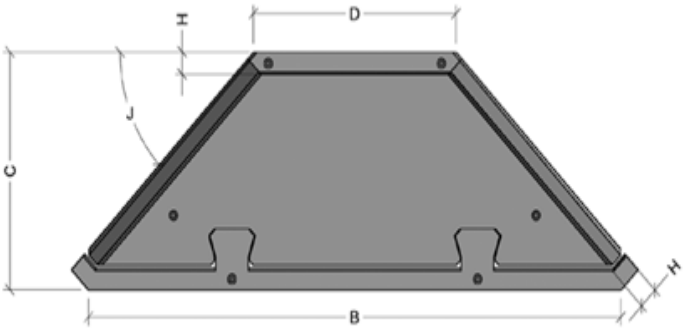 TOP VIEW

Single Barrel (All dimensions in 'mm' unless otherwise shown)

Series	Normal Pipe Diameter	Approximate Mass (Kg)	A	B	C	D	E	F	G	T	t	H	J
Type S1	300-600	760	390-725	2 226	850	800	910	170	440	100	80	80	45°
Type S2	675-900	2 100	820-1 070	3 253	1 120	1 350	1 595	250	700	120	100	100	45°
Type S3	1 050-1 350	5 070	1 225-1 555	4 007	2 200	1 700	1 875	300	705	165	125	125	60°

Doule Barrel (All dimensions in 'mm' unless otherwise shown)

Series	Normal Pipe Diameter	Approximate Mass (Kg)	A	B	C	D	E	F	G	T	t	H	J
Type D1	300-600	1 130	390-725	3 226	850	1 800	910	170	440	100	80	80	45°
Type D2	675-900	3 000	820-1 070	4 598	1 120	2 700	1 595	250	700	120	100	100	45°
Type D3	1 050-1 350	7 100	1 225-1 555	5 847	2 200	3 540	1 875	300	705	165	125	125	60°

5. HANDLING

- No cracked or damaged wingwalls will be delivered on site
- Supplier to make sure sharp edges are not damaged
- When offloading the products on site, the equipment must not damage the products
- Supplier when offloading wingwalls should use a lifting hole in the barrel to handle the wingwalls
- A sling with lifting eye and spreader bar must be used when offloading and loading of wingwalls.

6. TECHNICAL SUPPORT

Should any problem be reported to the supplier concerning the services, the following response times are expected:

- Within 24 hours a representative of the supplier should be on site to resolve the problem.
- Within 24 hours there should be a solution to the problem or if not possible, replacement products should be on site within 48 hours at the supplier's expense.

ANY DEFECTED PRODUCT SHOULD BE REPLACED AT THE SUPPLIER'S EXPENSE.

7. QUANTITY

(i) The Bidder will be required to perform the following service as part of this contract:

- Supply and delivery of concrete wingwalls material to Mimvubu Water Project near Maclear in Eastern Cape Province
- All sourcing, transportation and loading costs shall be included in the bid rates.

8. QUANTITIES

- The quantity required cannot be guaranteed.
- However, the estimated quantity is given in the SBD 3.1.
- Orders will be placed as and when requirements become known.
- Deliveries will be required **14 days** from date of the official order as and when requested by the end-user.

7. PROGRAMME OF WORKS

Supply and delivery shall commence within **14 days** after receipt of official DWS order and as per notification by
end-user until the full quantity needed is delivered.

8. ROAD CONDITIONS AND DISTANCE

Bidders are advised to acquaint themselves with roads, road conditions, distances, etc. on and to the site, before bidding.

9. COSTS

Bidders shall provide in their bid for all labour, plant, material, implements and vehicles necessary for the

	execution of the contract and all operating and maintenance costs in accordance with the bid documents.
10.	**DELIVERY**
	19 mm stone will be delivered during the following working hours 07h00 to 15h00 from Monday to Thursday but not on the following days or periods: as per request from the Project or Site. (i) Fridays 15h00 to Mondays 07h00 (ii) All public holidays (iii) The last Thursday and Friday of the month (iv) The period between 11 December and 04 January • The Bidder shall nominate a contract person with whom the Department will arrange and schedule collection. • DWS will decline products that do not comply with the specification when it is collected. • The declined material will not be accepted by the Department and problem must be resolved within 48 hours. • The ownership of and risk for the product purchased will pass to the Department at the point of collection i.e. where a signed acceptance take place.
11.	**DELIVERY PERIOD**
	A firm delivery period is required. Adherence to bid delivery period is of utmost importance.
12.	**PAYMENT**
	• Payment will be made per concrete wingwalls supplied to site. • The Department reserves the right to check the quantities supplied at any time. • Payment will be made monthly on receipt of specified tax invoices. • Payment will not be made for consignment unless supported by delivery notes. • Payment will be done within 30 days of receipt and approval of original invoice by depositing the payment directly into the bank account of the successful bidder. • No cash or cheque payment will be done. No upfront payment to be done. • Payment for standing time exceeding three hours will only be made if such standing time is a result of the action of the Department. • Bidders shall provide in their bid for all labour, plant, material, implements and vehicles necessary for the execution of the contract and all operating and maintenance costs in accordance with the bid documents.
13.	**DELIVERY PERIOD AND BID PRICE**
	• All-inclusive bid prices are required, meaning VAT, delivery and any other cost mentioned in the specification for the Bidders account must be included in the unit price. • Firm bid prices and delivery/collection periods must be submitted. • "Firm" prices are deemed to be the prices which are only subject to the following statutory change (a) VAT, (b) Any levy related to customs and excise (written proof must be given) Adherence to bid delivery/collection period is of utmost importance.
14.	**SAFETY AND ENVIRONMENTAL**
	Bidders are required to adhere to the Departments Safety and Environmental policies.

Therewith I, _____ (Bidder's Name) declare that I have read, completed and understood the above specifications.

_____

BIDDER'S SIGNATURE

DEPARTMENT OF WATER AND SANITATION

WTE1067CE

SUPPLY AND DELIVERY OF LOCAL CONTENT PRECAST WINGWALLS FOR MZIMVUBU WATER PROJECT – ACCESS ROAD NEAR MACLEAR IN EASTERN CAPE PROVINCE

SECTION 3: SBD 3.1 – PRICING SCHEDULE

CONTENTS

PREAMBLE TO THE SBD 3.1 – PRICING SCHEDULE

PREAMBLE TO THE SBD 3.1 – PRICING SCHEDULE

1. GENERAL

The SBD 3.1 forms part of the Contract Documents and must be read and priced in conjunction with all the other documents which include the Conditions of Contract and all other Specifications in the bid document.

2. QUANTITIES REFLECTED IN THE PRICING SCHEDULE

The quantities given in the SBD 3.1 can be subject to change. **The Department reserves the right to only purchase one product per item or one item or none of the items in the pricing schedule.**

The validity of the contract will in no way be affected by differences between the quantities in the SBD 3.1 and the quantities finally certified for payment.

3. PRICING OF THE SCHEDULE

The rates to be filled in the SDB 3.1 should include all costs. All rates and amounts quoted in the SBD 3.1 shall be in Rand and shall include applicable taxes.

4. CORRECTION OF ENTRIES

Incorrect entries shall not be erased or obliterated with correction fluid, use of correction fluid will invalidate your bid, but must be crossed out neatly. The correct figures must be entered above or adjacent to the deleted entry, and the alteration must be initialled by the Bidder, failure to initial where the correction was done will invalidate your bid.

PRICING SCHEDULE

(Firm Prices)

WTE1067CE

SUPPLY AND DELIVERY OF LOCAL CONTENT PRECAST WINGWALLS FOR MZIMVUBU WATER PROJECT – ACCESS ROAD NEAR MACLEAR IN EASTERN CAPE PROVINCE

THIS PRICING SCHEDULE MUST BE COMPETED IN FULL – FAILURE TO COMPLY WILL INVALIDATE YOUR BID

CLOSING TIME 11:00 **ON: 29 OCTOBER 2026** **BID NO.: WTE1067CE**

NAME OF BIDDER: ……

OFFER TO BE VALID FOR 120 DAYS FROM CLOSING DATE OF BID

ITEM	DESCRIPTION	QTY	Unit Price	AMOUNT R c
1.	600 Single Wingwall Shell(Type S1)	70	R.....each	R.....
2.	300-600 Single Wingwall Toe(Std S1)	70	R.....each	R.....
3.	600 Double Wingwall Shell(Type D1)	8	R.....each	R.....
4.	300-600 Double Wingwall Toe(Std D1)	8	R.....each	R.....
5.	750 Single Wingwall Shell(Type S2)	2	R.....each	R.....
6.	675-900 Single Wingwall Toe(Std D2)	6	R.....each	R.....
7.	900 Single Wingwall Shell(Type S2)	4	R.....each	R.....
8.	Transport	Sum	R.....	R.....
			SUB-TOTAL (EXCL. VAT)	R……
			15% VAT	R……...
			TOTAL (INCL. VAT)	R……

-	Delivery basis. (See note hereunder)	**To Site** Mzimvubu near Maclear in Eastern Cape Province
-	**Period required for delivery after receipt of order:**	**Within 14 days**
-	**Name of Manufacturer, Where is the Product sourced from?**	_____
-	Delivery period firm	***FIRM / NOT FIRM**
-	Is the price firm	***FIRM / NOT FIRM**

NOTE:

- **Failure to complete all the relevant information in SBD 3.1 will render your bid as non-responsive**

Any enquiries regarding bidding procedures may be directed to the –

Department Water and Sanitation
Supply Chain Management Office
Construction East,
Mthatha
5900

Administrative information:

Ms. Senzy Gumede / 081 017 5365 , E-mail: GumedeSe@dws.gov.za

or

For Technical or site information:

Mr: N Mbambo / 060 475 8171, E-mail: MbamboN@dws.gov.za

THE NATIONAL TREASURY

Republic of South Africa

GOVERNMENT PROCUREMENT:

GENERAL CONDITIONS OF CONTRACT

July 2010

GOVERNMENT PROCUREMENT

GENERAL CONDITIONS OF CONTRACT
July 2010

NOTES

The purpose of this document is to:

(i) Draw special attention to certain general conditions applicable to government bids, contracts and orders; and
(ii) To ensure that clients be familiar with regard to the rights and obligations of all parties involved in doing business with government.

In this document words in the singular also mean in the plural and vice versa and words in the masculine also mean in the feminine and neuter.

- The General Conditions of Contract will form part of all bid documents and may not be amended.

- Special Conditions of Contract (SCC) relevant to a specific bid, should be compiled separately for every bid (if (applicable) and will supplement the General Conditions of Contract. Whenever there is a conflict, the provisions in the SCC shall prevail.

TABLE OF CLAUSES

1. Definitions
2. Application
3. General
4. Standards
5. Use of contract documents and information; inspection
6. Patent rights
7. Performance security
8. Inspections, tests and analysis
9. Packing
10. Delivery and documents
11. Insurance
12. Transportation
13. Incidental services
14. Spare parts
15. Warranty
16. Payment
17. Prices
18. Contract amendments
19. Assignment
20. Subcontracts
21. Delays in the supplier's performance
22. Penalties
23. Termination for default
24. Dumping and countervailing duties
25. Force Majeure
26. Termination for insolvency
27. Settlement of disputes
28. Limitation of liability
29. Governing language
30. Applicable law
31. Notices
32. Taxes and duties
33. National Industrial Participation Programme (NIPP)
34. Prohibition of restrictive practices

General Conditions of Contract

1. Definitions

1. The following terms shall be interpreted as indicated:

1.1 “Closing time” means the date and hour specified in the bidding documents for the receipt of bids.

1.2 “Contract” means the written agreement entered into between the purchaser and the supplier, as recorded in the contract form signed by the parties, including all attachments and appendices thereto and all documents incorporated by reference therein.

1.3 “Contract price” means the price payable to the supplier under the contract for the full and proper performance of his contractual obligations.

1.4 “Corrupt practice” means the offering, giving, receiving, or soliciting of any thing of value to influence the action of a public official in the procurement process or in contract execution.

1.5 "Countervailing duties" are imposed in cases where an enterprise abroad is subsidized by its government and encouraged to market its products internationally.

1.6 “Country of origin” means the place where the goods were mined, grown or produced or from which the services are supplied. Goods are produced when, through manufacturing, processing or substantial and major assembly of components, a commercially recognized new product results that is substantially different in basic characteristics or in purpose or utility from its components.

1.7 “Day” means calendar day.

1.8 “Delivery” means delivery in compliance of the conditions of the contract or order.

1.9 “Delivery ex stock” means immediate delivery directly from stock actually on hand.

1.10 “Delivery into consignees store or to his site” means delivered and unloaded in the specified store or depot or on the specified site in compliance with the conditions of the contract or order, the supplier bearing all risks and charges involved until the supplies are so delivered and a valid receipt is obtained.

1.11 "Dumping" occurs when a private enterprise abroad market its goods on own initiative in the RSA at lower prices than that of the country of origin and which have the potential to harm the local industries in the

RSA.

1.12 ”Force majeure” means an event beyond the control of the supplier and not involving the supplier’s fault or negligence and not foreseeable. Such events may include, but is not restricted to, acts of the purchaser in its sovereign capacity, wars or revolutions, fires, floods, epidemics, quarantine restrictions and freight embargoes.

1.13 “Fraudulent practice” means a misrepresentation of facts in order to influence a procurement process or the execution of a contract to the detriment of any bidder, and includes collusive practice among bidders (prior to or after bid submission) designed to establish bid prices at artificial non-competitive levels and to deprive the bidder of the benefits of free and open competition.

1.14 “GCC” means the General Conditions of Contract.

1.15 “Goods” means all of the equipment, machinery, and/or other materials that the supplier is required to supply to the purchaser under the contract.

1.16 “Imported content” means that portion of the bidding price represented by the cost of components, parts or materials which have been or are still to be imported (whether by the supplier or his subcontractors) and which costs are inclusive of the costs abroad, plus freight and other direct importation costs such as landing costs, dock dues, import duty, sales duty or other similar tax or duty at the South African place of entry as well as transportation and handling charges to the factory in the Republic where the supplies covered by the bid will be manufactured.

1.17 “Local content” means that portion of the bidding price which is not included in the imported content provided that local manufacture does take place.

1.18 “Manufacture” means the production of products in a factory using labour, materials, components and machinery and includes other related value-adding activities.

1.19 “Order” means an official written order issued for the supply of goods or works or the rendering of a service.

1.20 “Project site,” where applicable, means the place indicated in bidding documents.

1.21 “Purchaser” means the organization purchasing the goods.

1.22 “Republic” means the Republic of South Africa.

1.23 “SCC” means the Special Conditions of Contract.

1.24 “Services” means those functional services ancillary to the supply of the goods, such as transportation and any other incidental services, such as installation, commissioning, provision of technical assistance, training, catering, gardening, security, maintenance and other such

obligations of the supplier covered under the contract.

1.25 "Written" or "in writing" means handwritten in ink or any form of electronic or mechanical writing.

2. Application

2.1 These general conditions are applicable to all bids, contracts and orders including bids for functional and professional services, sales, hiring, letting and the granting or acquiring of rights, but excluding immovable property, unless otherwise indicated in the bidding documents.

2.2 Where applicable, special conditions of contract are also laid down to cover specific supplies, services or works.

2.3 Where such special conditions of contract are in conflict with these general conditions, the special conditions shall apply.

3. General

3.1 Unless otherwise indicated in the bidding documents, the purchaser shall not be liable for any expense incurred in the preparation and submission of a bid. Where applicable a non-refundable fee for documents may be charged.

3.2 With certain exceptions, invitations to bid are only published in the Government Tender Bulletin. The Government Tender Bulletin may be obtained directly from the Government Printer, Private Bag X85, Pretoria 0001, or accessed electronically from www.treasury.gov.za

4. Standards

4.1 The goods supplied shall conform to the standards mentioned in the bidding documents and specifications.

5. Use of contract documents and information; inspection.

5.1 The supplier shall not, without the purchaser's prior written consent, disclose the contract, or any provision thereof, or any specification, plan, drawing, pattern, sample, or information furnished by or on behalf of the purchaser in connection therewith, to any person other than a person employed by the supplier in the performance of the contract. Disclosure to any such employed person shall be made in confidence and shall extend only so far as may be necessary for purposes of such performance.

5.2 The supplier shall not, without the purchaser's prior written consent, make use of any document or information mentioned in GCC clause 5.1 except for purposes of performing the contract.

5.3 Any document, other than the contract itself mentioned in GCC clause 5.1 shall remain the property of the purchaser and shall be returned (all copies) to the purchaser on completion of the supplier's performance under the contract if so required by the purchaser.

5.4 The supplier shall permit the purchaser to inspect the supplier's records relating to the performance of the supplier and to have them audited by auditors appointed by the purchaser, if so required by the purchaser.

6. Patent rights

6.1 The supplier shall indemnify the purchaser against all third-party claims of infringement of patent, trademark, or industrial design rights arising from use of the goods or any part thereof by the purchaser.

7. Performance security

7.1 Within thirty (30) days of receipt of the notification of contract award, the successful bidder shall furnish to the purchaser the performance security of the amount specified in SCC.

7.2 The proceeds of the performance security shall be payable to the purchaser as compensation for any loss resulting from the supplier's failure to complete his obligations under the contract.

7.3 The performance security shall be denominated in the currency of the contract, or in a freely convertible currency acceptable to the purchaser and shall be in one of the following forms:

(a) a bank guarantee or an irrevocable letter of credit issued by a reputable bank located in the purchaser's country or abroad, acceptable to the purchaser, in the form provided in the bidding documents or another form acceptable to the purchaser; or
(b) a cashier's or certified cheque

7.4 The performance security will be discharged by the purchaser and returned to the supplier not later than thirty (30) days following the date of completion of the supplier's performance obligations under the contract, including any warranty obligations, unless otherwise specified in SCC.

8. Inspections, tests and analyses

8.1 All pre-bidding testing will be for the account of the bidder.

8.2 If it is a bid condition that supplies to be produced or services to be rendered should at any stage during production or execution or on completion be subject to inspection, the premises of the bidder or contractor shall be open, at all reasonable hours, for inspection by a representative of the Department or an organization acting on behalf of the Department.

8.3 If there are no inspection requirements indicated in the bidding documents and no mention is made in the contract, but during the contract period it is decided that inspections shall be carried out, the purchaser shall itself make the necessary arrangements, including payment arrangements with the testing authority concerned.

8.4 If the inspections, tests and analyses referred to in clauses 8.2 and 8.3 show the supplies to be in accordance with the contract requirements, the cost of the inspections, tests and analyses shall be defrayed by the purchaser.

8.5 Where the supplies or services referred to in clauses 8.2 and 8.3 do not comply with the contract requirements, irrespective of whether such supplies or services are accepted or not, the cost in connection with these inspections, tests or analyses shall be defrayed by the supplier.

8.6 Supplies and services which are referred to in clauses 8.2 and 8.3 and which do not comply with the contract requirements may be rejected.

8.7 Any contract supplies may on or after delivery be inspected, tested or

analyzed and may be rejected if found not to comply with the requirements of the contract. Such rejected supplies shall be held at the cost and risk of the supplier who shall, when called upon, remove them immediately at his own cost and forthwith substitute them with supplies which do comply with the requirements of the contract. Failing such removal the rejected supplies shall be returned at the suppliers cost and risk. Should the supplier fail to provide the substitute supplies forthwith, the purchaser may, without giving the supplier further opportunity to substitute the rejected supplies, purchase such supplies as may be necessary at the expense of the supplier.

8.8 The provisions of clauses 8.4 to 8.7 shall not prejudice the right of the purchaser to cancel the contract on account of a breach of the conditions thereof, or to act in terms of Clause 23 of GCC.

9. Packing

9.1 The supplier shall provide such packing of the goods as is required to prevent their damage or deterioration during transit to their final destination, as indicated in the contract. The packing shall be sufficient to withstand, without limitation, rough handling during transit and exposure to extreme temperatures, salt and precipitation during transit, and open storage. Packing, case size and weights shall take into consideration, where appropriate, the remoteness of the goods' final destination and the absence of heavy handling facilities at all points in transit.

9.2 The packing, marking, and documentation within and outside the packages shall comply strictly with such special requirements as shall be expressly provided for in the contract, including additional requirements, if any, specified in SCC, and in any subsequent instructions ordered by the purchaser.

10. Delivery and documents

10.1 Delivery of the goods shall be made by the supplier in accordance with the terms specified in the contract. The details of shipping and/or other documents to be furnished by the supplier are specified in SCC.

10.2 Documents to be submitted by the supplier are specified in SCC.

11. Insurance

11.1 The goods supplied under the contract shall be fully insured in a freely convertible currency against loss or damage incidental to manufacture or acquisition, transportation, storage and delivery in the manner specified in the SCC.

12. Transportation

12.1 Should a price other than an all-inclusive delivered price be required, this shall be specified in the SCC.

13. Incidental services

13.1 The supplier may be required to provide any or all of the following services, including additional services, if any, specified in SCC:

(a) performance or supervision of on-site assembly and/or commissioning of the supplied goods;
(b) furnishing of tools required for assembly and/or maintenance of the supplied goods;
(c) furnishing of a detailed operations and maintenance manual for each appropriate unit of the supplied goods;

(d) performance or supervision or maintenance and/or repair of the supplied goods, for a period of time agreed by the parties, provided that this service shall not relieve the supplier of any warranty obligations under this contract; and

(e) training of the purchaser's personnel, at the supplier's plant and/or on-site, in assembly, start-up, operation, maintenance, and/or repair of the supplied goods.

13.2 Prices charged by the supplier for incidental services, if not included in the contract price for the goods, shall be agreed upon in advance by the parties and shall not exceed the prevailing rates charged to other parties by the supplier for similar services.

14. Spare parts

14.1 As specified in SCC, the supplier may be required to provide any or all of the following materials, notifications, and information pertaining to spare parts manufactured or distributed by the supplier:

(a) such spare parts as the purchaser may elect to purchase from the supplier, provided that this election shall not relieve the supplier of any warranty obligations under the contract; and

(b) in the event of termination of production of the spare parts:

(i) Advance notification to the purchaser of the pending termination, in sufficient time to permit the purchaser to procure needed requirements; and

(ii) following such termination, furnishing at no cost to the purchaser, the blueprints, drawings, and specifications of the spare parts, if requested.

15. Warranty

15.1 The supplier warrants that the goods supplied under the contract are new, unused, of the most recent or current models, and that they incorporate all recent improvements in design and materials unless provided otherwise in the contract. The supplier further warrants that all goods supplied under this contract shall have no defect, arising from design, materials, or workmanship (except when the design and/or material is required by the purchaser's specifications) or from any act or omission of the supplier, that may develop under normal use of the supplied goods in the conditions prevailing in the country of final destination.

15.2 This warranty shall remain valid for twelve (12) months after the goods, or any portion thereof as the case may be, have been delivered to and accepted at the final destination indicated in the contract, or for eighteen (18) months after the date of shipment from the port or place of loading in the source country, whichever period concludes earlier, unless specified otherwise in SCC.

15.3 The purchaser shall promptly notify the supplier in writing of any claims arising under this warranty.

15.4 Upon receipt of such notice, the supplier shall, within the period specified in SCC and with all reasonable speed, repair or replace the defective goods or parts thereof, without costs to the purchaser.

15.5 If the supplier, having been notified, fails to remedy the defect(s) within the period specified in SCC, the purchaser may proceed to take

such remedial action as may be necessary, at the supplier's risk and expense and without prejudice to any other rights which the purchaser may have against the supplier under the contract.

16. Payment

16.1 The method and conditions of payment to be made to the supplier under this contract shall be specified in SCC.

16.2 The supplier shall furnish the purchaser with an invoice accompanied by a copy of the delivery note and upon fulfillment of other obligations stipulated in the contract.

16.3 Payments shall be made promptly by the purchaser, but in no case later than thirty (30) days after submission of an invoice or claim by the supplier.

16.4 Payment will be made in Rand unless otherwise stipulated in SCC.

17. Prices

17.1 Prices charged by the supplier for goods delivered and services performed under the contract shall not vary from the prices quoted by the supplier in his bid, with the exception of any price adjustments authorized in SCC or in the purchaser's request for bid validity extension, as the case may be.

18. Contract amendments

18.1 No variation in or modification of the terms of the contract shall be made except by written amendment signed by the parties concerned.

19. Assignment

19.1 The supplier shall not assign, in whole or in part, its obligations to perform under the contract, except with the purchaser's prior written consent.

20. Subcontracts

20.1 The supplier shall notify the purchaser in writing of all subcontracts awarded under this contracts if not already specified in the bid. Such notification, in the original bid or later, shall not relieve the supplier from any liability or obligation under the contract.

21. Delays in the supplier's performance

21.1 Delivery of the goods and performance of services shall be made by the supplier in accordance with the time schedule prescribed by the purchaser in the contract.

21.2 If at any time during performance of the contract, the supplier or its subcontractor(s) should encounter conditions impeding timely delivery of the goods and performance of services, the supplier shall promptly notify the purchaser in writing of the fact of the delay, its likely duration and its cause(s). As soon as practicable after receipt of the supplier's notice, the purchaser shall evaluate the situation and may at his discretion extend the supplier's time for performance, with or without the imposition of penalties, in which case the extension shall be ratified by the parties by amendment of contract.

21.3 No provision in a contract shall be deemed to prohibit the obtaining of supplies or services from a national department, provincial department, or a local authority.

21.4 The right is reserved to procure outside of the contract small quantities or to have minor essential services executed if an emergency arises, the

supplier's point of supply is not situated at or near the place where the supplies are required, or the supplier's services are not readily available.

21.5 Except as provided under GCC Clause 25, a delay by the supplier in the performance of its delivery obligations shall render the supplier liable to the imposition of penalties, pursuant to GCC Clause 22, unless an extension of time is agreed upon pursuant to GCC Clause 21.2 without the application of penalties.

21.6 Upon any delay beyond the delivery period in the case of a supplies contract, the purchaser shall, without canceling the contract, be entitled to purchase supplies of a similar quality and up to the same quantity in substitution of the goods not supplied in conformity with the contract and to return any goods delivered later at the supplier's expense and risk, or to cancel the contract and buy such goods as may be required to complete the contract and without prejudice to his other rights, be entitled to claim damages from the supplier.

22. Penalties

22.1 Subject to GCC Clause 25, if the supplier fails to deliver any or all of the goods or to perform the services within the period(s) specified in the contract, the purchaser shall, without prejudice to its other remedies under the contract, deduct from the contract price, as a penalty, a sum calculated on the delivered price of the delayed goods or unperformed services using the current prime interest rate calculated for each day of the delay until actual delivery or performance. The purchaser may also consider termination of the contract pursuant to GCC Clause 23.

23. Termination for default

23.1 The purchaser, without prejudice to any other remedy for breach of contract, by written notice of default sent to the supplier, may terminate this contract in whole or in part:

(a) if the supplier fails to deliver any or all of the goods within the period(s) specified in the contract, or within any extension thereof granted by the purchaser pursuant to GCC Clause 21.2;

(b) if the Supplier fails to perform any other obligation(s) under the contract; or

(c) if the supplier, in the judgment of the purchaser, has engaged in corrupt or fraudulent practices in competing for or in executing the contract.

23.2 In the event the purchaser terminates the contract in whole or in part, the purchaser may procure, upon such terms and in such manner as it deems appropriate, goods, works or services similar to those undelivered, and the supplier shall be liable to the purchaser for any excess costs for such similar goods, works or services. However, the supplier shall continue performance of the contract to the extent not terminated.

23.3 Where the purchaser terminates the contract in whole or in part, the purchaser may decide to impose a restriction penalty on the supplier by prohibiting such supplier from doing business with the public sector for a period not exceeding 10 years.

23.4 If a purchaser intends imposing a restriction on a supplier or any

person associated with the supplier, the supplier will be allowed a time period of not more than fourteen (14) days to provide reasons why the envisaged restriction should not be imposed. Should the supplier fail to respond within the stipulated fourteen (14) days the purchaser may regard the intended penalty as not objected against and may impose it on the supplier.

23.5 Any restriction imposed on any person by the Accounting Officer / Authority will, at the discretion of the Accounting Officer / Authority, also be applicable to any other enterprise or any partner, manager, director or other person who wholly or partly exercises or exercised or may exercise control over the enterprise of the first-mentioned person, and with which enterprise or person the first-mentioned person, is or was in the opinion of the Accounting Officer / Authority actively associated.

23.6 If a restriction is imposed, the purchaser must, within five (5) working days of such imposition, furnish the National Treasury, with the following information:

(i) the name and address of the supplier and / or person restricted by the purchaser;
(ii) the date of commencement of the restriction
(iii) the period of restriction; and
(iv) the reasons for the restriction.

These details will be loaded in the National Treasury's central database of suppliers or persons prohibited from doing business with the public sector.

23.7 If a court of law convicts a person of an offence as contemplated in sections 12 or 13 of the Prevention and Combating of Corrupt Activities Act, No. 12 of 2004, the court may also rule that such person's name be endorsed on the Register for Tender Defaulters. When a person's name has been endorsed on the Register, the person will be prohibited from doing business with the public sector for a period not less than five years and not more than 10 years. The National Treasury is empowered to determine the period of restriction and each case will be dealt with on its own merits. According to section 32 of the Act the Register must be open to the public. The Register can be perused on the National Treasury website.

24. Anti-dumping and countervailing duties and rights

24.1 When, after the date of bid, provisional payments are required, or anti-dumping or countervailing duties are imposed, or the amount of a provisional payment or anti-dumping or countervailing right is increased in respect of any dumped or subsidized import, the State is not liable for any amount so required or imposed, or for the amount of any such increase. When, after the said date, such a provisional payment is no longer required or any such anti-dumping or countervailing right is abolished, or where the amount of such provisional payment or any such right is reduced, any such favourable difference shall on demand be paid forthwith by the contractor to the State or the State may deduct such amounts from moneys (if any) which may otherwise be due to the contractor in regard to supplies or services which he delivered or rendered, or is to deliver or render in terms of the contract or any other contract or any other amount which

may be due to him

25. Force Majeure

25.1 Notwithstanding the provisions of GCC Clauses 22 and 23, the supplier shall not be liable for forfeiture of its performance security, damages, or termination for default if and to the extent that his delay in performance or other failure to perform his obligations under the contract is the result of an event of force majeure.

25.2 If a force majeure situation arises, the supplier shall promptly notify the purchaser in writing of such condition and the cause thereof. Unless otherwise directed by the purchaser in writing, the supplier shall continue to perform its obligations under the contract as far as is reasonably practical, and shall seek all reasonable alternative means for performance not prevented by the force majeure event.

26. Termination for insolvency

26.1 The purchaser may at any time terminate the contract by giving written notice to the supplier if the supplier becomes bankrupt or otherwise insolvent. In this event, termination will be without compensation to the supplier, provided that such termination will not prejudice or affect any right of action or remedy which has accrued or will accrue thereafter to the purchaser.

27. Settlement of Disputes

27.1 If any dispute or difference of any kind whatsoever arises between the purchaser and the supplier in connection with or arising out of the contract, the parties shall make every effort to resolve amicably such dispute or difference by mutual consultation.

27.2 If, after thirty (30) days, the parties have failed to resolve their dispute or difference by such mutual consultation, then either the purchaser or the supplier may give notice to the other party of his intention to commence with mediation. No mediation in respect of this matter may be commenced unless such notice is given to the other party.

27.3 Should it not be possible to settle a dispute by means of mediation, it may be settled in a South African court of law.

27.4 Mediation proceedings shall be conducted in accordance with the rules of procedure specified in the SCC.

27.5 Notwithstanding any reference to mediation and/or court proceedings herein,

(a) the parties shall continue to perform their respective obligations under the contract unless they otherwise agree; and
(b) the purchaser shall pay the supplier any monies due the supplier.

28. Limitation of liability

28.1 Except in cases of criminal negligence or willful misconduct, and in the case of infringement pursuant to Clause 6;
(a) the supplier shall not be liable to the purchaser, whether in contract, tort, or otherwise, for any indirect or consequential loss or damage, loss of use, loss of production, or loss of profits or interest costs, provided that this exclusion shall not apply to any obligation of the supplier to pay penalties and/or damages to the purchaser; and

(b) the aggregate liability of the supplier to the purchaser, whether under the contract, in tort or otherwise, shall not exceed the total contract price, provided that this limitation shall not apply to the cost of repairing or replacing defective equipment.

29. Governing language

29.1 The contract shall be written in English. All correspondence and other documents pertaining to the contract that is exchanged by the parties shall also be written in English.

30. Applicable law

30.1 The contract shall be interpreted in accordance with South African laws, unless otherwise specified in SCC.

31. Notices

31.1 Every written acceptance of a bid shall be posted to the supplier concerned by registered or certified mail and any other notice to him shall be posted by ordinary mail to the address furnished in his bid or to the address notified later by him in writing and such posting shall be deemed to be proper service of such notice

31.2 The time mentioned in the contract documents for performing any act after such aforesaid notice has been given, shall be reckoned from the date of posting of such notice.

32. Taxes and duties

32.1 A foreign supplier shall be entirely responsible for all taxes, stamp duties, license fees, and other such levies imposed outside the purchaser's country.

32.2 A local supplier shall be entirely responsible for all taxes, duties, license fees, etc., incurred until delivery of the contracted goods to the purchaser.

32.3 No contract shall be concluded with any bidder whose tax matters are not in order. Prior to the award of a bid the Department must be in possession of a tax clearance certificate, submitted by the bidder. This certificate must be an original issued by the South African Revenue Services.

33. National Industrial Participation (NIP) Programme

33.1 The NIP Programme administered by the Department of Trade and Industry shall be applicable to all contracts that are subject to the NIP obligation.

34 Prohibition of Restrictive practices

34.1 In terms of section 4 (1) (b) (iii) of the Competition Act No. 89 of 1998, as amended, an agreement between, or concerted practice by, firms, or a decision by an association of firms, is prohibited if it is between parties in a horizontal relationship and if a bidder (s) is / are or a contractor(s) was / were involved in collusive bidding (or bid rigging).

34.2 If a bidder(s) or contractor(s), based on reasonable grounds or evidence obtained by the purchaser, has / have engaged in the restrictive practice referred to above, the purchaser may refer the matter to the Competition Commission for investigation and possible imposition of administrative penalties as contemplated in the Competition Act No. 89 of 1998.

34.3 If a bidder(s) or contractor(s), has / have been found guilty by the Competition Commission of the restrictive practice referred to above, the purchaser may, in addition and without prejudice to any other remedy provided for, invalidate the bid(s) for such item(s) offered, and / or terminate the contract in whole or part, and / or restrict the bidder(s) or contractor(s) from conducting business with the public sector for a period not exceeding ten (10) years and / or claim damages from the bidder(s) or contractor(s) concerned.

BIDDER'S DISCLOSURE

1. PURPOSE OF THE FORM

1.1 Any person (natural or juristic) may make an offer or offers in terms of this invitation to bid. In line with the principles of transparency, accountability, impartiality, and ethics as enshrined in the Constitution of the Republic of South Africa, 1996 (Constitution), and further expressed in the various applicable legislation, it is required for the bidder to make this declaration in respect of the details required hereunder.

1.2 If a person is listed in the Register for Tender Defaulters and/or the List of Restricted Suppliers, that person will automatically be disqualified from the bid process.

2. DECLARATION ON EMPLOYMENT BY ORGAN OF STATE

2.1 Is the bidder, or any of the directors / trustees / shareholders / members / partners of the bidder employed by an organ of state, as defined in section 239 of the Constitution? **YES/NO**

2.2 If YES, furnish particulars of the names, individual identity numbers, in the table below:

Full Name	**Identity Number**	**Name of organ of state**

1. the power, by one person or a group of persons holding the majority of the equity of an enterprise, alternatively, the person/s having the deciding vote or power to influence or to direct the course and decisions of the enterprise.

2.3 Do you, or any person connected with the bidder, have a relationship with any person who is employed by the procuring institution? **YES/NO**

2.3.1 If so, furnish particulars:

……
……
……

2.4 Does the bidder or any of its directors/trustees/shareholders members/partners or any person having a controlling interest in the enterprise have any interest in any other related enterprise, whether or not they are bidding for this contract? **YES/NO**

2.4.1 If so, indicate all companies registered in the CSD in the table below:

Supplier registration number (MAAA)	**Status (active/inactive/deleted)**

Failure to disclose all CSD-registered active companies linked to all Directors will lead to disqualification**.**

3 GENERAL DECLARATION

I, ……....., the undersigned, in submitting the accompanying bid, do hereby make the following statements that I certify to be true and complete in every respect:

3.1 I have read and I understand the contents of this disclosure.

3.2 I understand that the accompanying bid will be disqualified if this disclosure is found to be false.

3.3 The bidder has arrived at the accompanying bid independently from, and without consultation, communication, agreement or arrangement with any competitor.

3.4 In addition, there have been no consultations, communications, agreements or arrangements with any competitor regarding the quality, quantity, specifications, prices, including methods, factors or formulas used to calculate prices, market allocation, the intention or decision to submit or not to submit the bid, bidding with the intention not to win the bid and conditions or delivery particulars of the products or services to which this bid invitation relates.

3.5 The terms of the accompanying bid have not been, and will not be, disclosed by the bidder, directly or indirectly, to any competitor, prior to the date and time of the official bid opening or of the awarding of the contract.

3.6 There have been no consultations, communications, agreements or arrangements made by the bidder with any official of the procuring institution in relation to this procurement process prior to and during the bidding process except to provide clarification on the bid submitted where so required by the institution; and the bidder was not involved in the drafting of the specifications or terms of reference for this bid.

3.7 I am aware that, in addition and without prejudice to any other remedy provided to combat any restrictive practices related to bids and contracts, bids that are suspicious will be reported to the Competition Commission for investigation and possible imposition of administrative penalties in terms of section 59 of the Competition Act, 1998 (Act No. 89 of 1998) and or may be referred to law enforcement agencies for criminal investigation and or may be restricted from conducting business with the state for a period not exceeding 10 years in terms of the Prevention and Combating of Corrupt Activities Act, 2004 (Act No. 12 of 2004) or any other applicable legislation.

I CERTIFY THAT THE ABOVE IS CORRECT.

I ACCEPT THAT THE PROCURING INSTITUTION MAY REJECT THE BID OR TAKE APPROPRIATE ACTION AGAINST ME IF THIS DECLARATION IS FALSE.

……	……
Signature	Date
……	……...
Designation	Name of bidder

PREFERENCE POINTS CLAIM FORM IN TERMS OF THE PREFERENTIAL PROCUREMENT REGULATIONS 2022

This preference form must form part of all tenders invited. It contains general information and serves as a claim form for preference points for specific goals.

NB: BEFORE COMPLETING THIS FORM, TENDERERS MUST STUDY THE GENERAL CONDITIONS, DEFINITIONS AND DIRECTIVES APPLICABLE IN RESPECT OF THE TENDER AND PREFERENTIAL PROCUREMENT REGULATIONS, 2022

---

1. GENERAL CONDITIONS

1.1 The following preference point systems are applicable to invitations to tender:

- the 80/20 system for requirements with a Rand value of up to R50 000 000 (all applicable taxes included); and
- the 90/10 system for requirements with a Rand value above R50 000 000 (all applicable taxes included).

1.2 **To be completed by the organ of state**

a) The applicable preference point system for this tender is the **80/20** preference point system.

1.3 Points for this tender (even in the case of a tender for income-generating contracts) shall be awarded for:

(a) Price; and

(b) Specific Goals.

1.4 **To be completed by the organ of state:**

The maximum points for this tender are allocated as follows:

	POINTS
PRICE	**80**
SPECIFIC GOALS	**20**
Total points for Price and SPECIFIC GOALS	**100**

1.5 Failure on the part of a tenderer to submit proof or documentation required in terms of this tender to claim points for specific goals with the tender, will be interpreted to mean that preference points for specific goals are not claimed.

1.6 The organ of state reserves the right to require of a tenderer, either before a tender is adjudicated or at any time subsequently, to substantiate any claim in regard to preferences, in any manner required by the organ of state.

2. DEFINITIONS

(a) **"tender"** means a written offer in the form determined by an organ of state in response to an invitation to provide goods or services through price quotations, competitive tendering process or any other method envisaged in legislation;

(b) **"price"** means an amount of money tendered for goods or services, and includes all

applicable taxes less all unconditional discounts;

(c) **"rand value"** means the total estimated value of a contract in Rand, calculated at the time of bid invitation, and includes all applicable taxes;

(d) **"tender for income-generating contracts"** means a written offer in the form determined by an organ of state in response to an invitation for the origination of income-generating contracts through any method envisaged in legislation that will result in a legal agreement between the organ of state and a third party that produces revenue for the organ of state, and includes, but is not limited to, leasing and disposal of assets and concession contracts, excluding direct sales and disposal of assets through public auctions; and

(e) **"the Act"** means the Preferential Procurement Policy Framework Act, 2000 (Act No. 5 of 2000).

3. FORMULAE FOR PROCUREMENT OF GOODS AND SERVICES

3.1. POINTS AWARDED FOR PRICE

3.1.1 THE 80/20 OR 90/10 PREFERENCE POINT SYSTEMS

A maximum of 80 or 90 points is allocated for price on the following basis:

80/20 **or** **90/10**

$$Ps = 80\left(1 - \frac{Pt - P\,min}{P\,min}\right) \quad \text{or} \quad Ps = 90\left(1 - \frac{Pt - P\,min}{P\,min}\right)$$

Where

Ps = Points scored for price of tender under consideration

Pt = Price of tender under consideration

Pmin = Price of lowest acceptable tender

3.2. FORMULAE FOR DISPOSAL OR LEASING OF STATE ASSETS AND INCOME GENERATING PROCUREMENT

3.2.1. POINTS AWARDED FOR PRICE

A maximum of 80 or 90 points is allocated for price on the following basis:

80/20 **or** **90/10**

$$Ps = 80\left(1 + \frac{Pt - P\,max}{P\,max}\right) \quad \text{or} \quad Ps = 90\left(1 + \frac{Pt - P\,max}{Pmax}\right)$$

Where

Ps = Points scored for price of tender under consideration

Pt = Price of tender under consideration

Pmax = Price of highest acceptable tender

4. POINTS AWARDED FOR SPECIFIC GOALS

4.1. In terms of Regulation 4(2); 5(2); 6(2) and 7(2) of the Preferential Procurement Regulations, preference points must be awarded for specific goals stated in the tender. For the purposes of this tender the tenderer will be allocated points based on the goals stated in table 1 below as may be supported by proof/ documentation stated in the conditions of this tender:

4.2. In cases where organs of state intend to use Regulation 3(2) of the Regulations, which states that, if it is unclear whether the 80/20 or 90/10 preference point system applies, an organ of state

must, in the tender documents, stipulate in the case of—

(a) an invitation for tender for income-generating contracts, that either the 80/20 or 90/10 preference point system will apply and that the highest acceptable tender will be used to determine the applicable preference point system; or

(b) any other invitation for tender, that either the 80/20 or 90/10 preference point system will apply and that the lowest acceptable tender will be used to determine the applicable preference point system,

then the organ of state must indicate the points allocated for specific goals for both the 90/10 and 80/20 preference point system.

Table 1: Specific goals for the tender and points claimed are indicated per the table below.

(Note to organs of state: Where either the 90/10 or 80/20 preference point system is applicable, corresponding points must also be indicated as such.

***Note to tenderers: The tenderer must indicate how they claim points for each preference point system.*)**

The specific goals allocated points in terms of this tender	Number of points allocated (80/20 system) (To be completed by the organ of state)	Number of points claimed (80/20 system) (To be completed by the tenderer)
Women Ownership	**5**	
Disability Ownership	**5**	
Youth Ownership	**5**	
Location of enterprise (local equals province) Eastern Cape Province	**2**	
B-BBEE status level contribution from level 1 to 2 which are QSE or EME	**3**	
TOTAL POINTS	**20**	

DECLARATION WITH REGARD TO COMPANY/FIRM

4.3. Name of company/firm…….

4.4. Company registration number: ……...

4.5. TYPE OF COMPANY/ FIRM

- ☐ Partnership/Joint Venture / Consortium
- ☐ One-person business/sole propriety
- ☐ Close corporation
- ☐ Public Company
- ☐ Personal Liability Company
- ☐ (Pty) Limited
- ☐ Non-Profit Company
- ☐ State Owned Company

[TICK APPLICABLE BOX]

4.6. I, the undersigned, who is duly authorised to do so on behalf of the company/firm, certify that the points claimed, based on the specific goals as advised in the tender, qualifies the company/ firm for the preference(s) shown and I acknowledge that:

i) The information furnished is true and correct;

ii) The preference points claimed are in accordance with the General Conditions as indicated in paragraph 1 of this form;

iii) In the event of a contract being awarded as a result of points claimed as shown in paragraphs 1.4 and 4.2, the contractor may be required to furnish documentary proof to the satisfaction of the organ of state that the claims are correct;

iv) If the specific goals have been claimed or obtained on a fraudulent basis or any of the conditions of contract have not been fulfilled, the organ of state may, in addition to any other remedy it may have –

(a) disqualify the person from the tendering process;

(b) recover costs, losses or damages it has incurred or suffered as a result of that person's conduct;

(c) cancel the contract and claim any damages which it has suffered as a result of having to make less favourable arrangements due to such cancellation;

(d) recommend that the tenderer or contractor, its shareholders and directors, or only the shareholders and directors who acted on a fraudulent basis, be restricted from obtaining business from any organ of state for a period not exceeding 10 years, after the *audi alteram partem* (hear the other side) rule has been applied; and

(e) forward the matter for criminal prosecution, if deemed necessary.

.....

SIGNATURE(S) OF TENDERER(S)

SURNAME AND NAME: .....

DATE: .....

ADDRESS: .....

.....

.....

.....

water & sanitation

Department:
Water and Sanitation
REPUBLIC OF SOUTH AFRICA

This template must be completed by the all suppliers and returned together with all the quotation documents.

QUOTATION / BIDNUMBER		
DESCRIPTION OF GOODS /SERVICE		
NAME OF SUPPLIER		
QOUTATION / BID AMOUNT		
BBBEE LEVEL		
COMPANY'S COMPOSITION OF EXISTANCE		
	% OWNERSHIP	TOTAL NUMBER OF: OWNERS/SHAREHODER/DIRECTORS
% of Black ownership		
% of Black People who are youth		
% of Black People who are black women		
% of Black People with Disability		
% of Black People living in rural underdeveloped areas or township		
% Cooperative owned by black people		
% of Black people who are military veterans		
SMME STATUS (eg. EME, QSE or LARGE/GENERIC)		

Name:.....

Position:.....

Signature:.....Date:.....

Please note that this information is for reporting purposes only, and will not prejudice the company in anyway nor will it be considered as an evaluation tool.

Annex C

Local Content Declaration - Summary Schedule

Note: VAT to be excluded from all calculations

(C1) **Tender No.** **RFP: 3434/23/03/202**
(C2) **Tender description:** ***Provision of Construction Services for the Design and Installation of electric fence at CSIR Cottesloe Campus***
(C3) **Designated product(s): Steel, telecom cables and electric cables**
(C4) **Tender Authority:** **CSIR**
(C5) **Tendering Entity name:**
(C6) **Tender Exchange Rate:** Pula _____ EU _____ GBP _____
(C7) **Specified local content % : electric cables 90%, telecom cables 90% and steel 100%**

		Calculation of local content						Tender summary			
Tender item no's	**List of items**	**Tender price - each (excl VAT)**	**Exempted imported value**	**Tender value net of exempted imported content**	**Imported value**	**Local value**	**Local content % (per item)**	**Tender Qty**	**Total tender value**	**Total exempted imported content**	**Total Imported content**
(C8)	*(C9)*	*(C10)*	*(C11)*	*(C12)*	*(C13)*	*(C14)*	*(C15)*	*(C16)*	*(C17)*	*(C18)*	*(C19)*

(C20) **Total tender value**	**R 0**	
(C21) **Total Exempt imported content**	**R 0**	
(C22) Total **Tender value net of exempt imported content**	**R 0**	
(C23) **Total Imported content**		**R 0**
(C24) **Total local content**		**R 0**
(C25) **Average local content % of tender**		

Signature of tenderer from Annex B

Date: _____