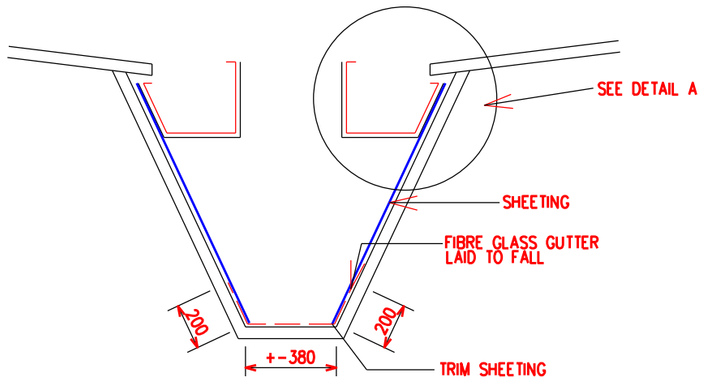

VALLEY BOX GUTTER (VBG) DETAIL
SECTION A-A
NTS

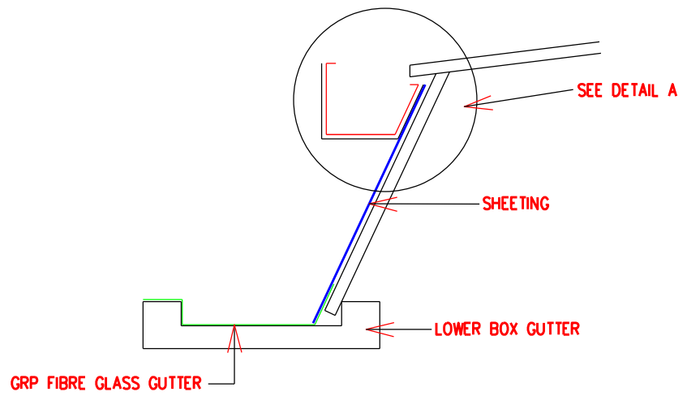

LOWER BOX GUTTER (LBG) DETAIL
SECTION B-B
NTS

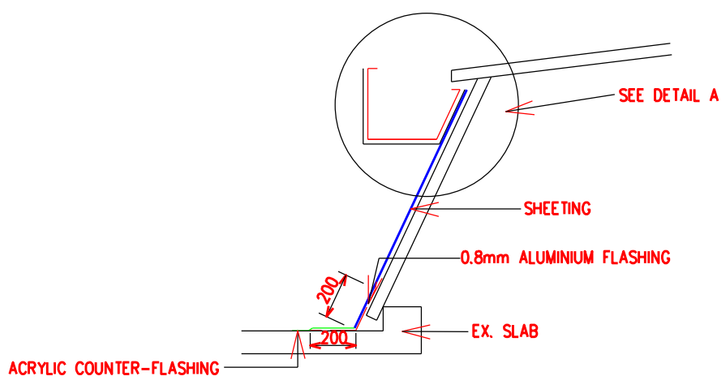

SIDE CLADDING/SLAB FLASHING
SECTION C-C
NTS

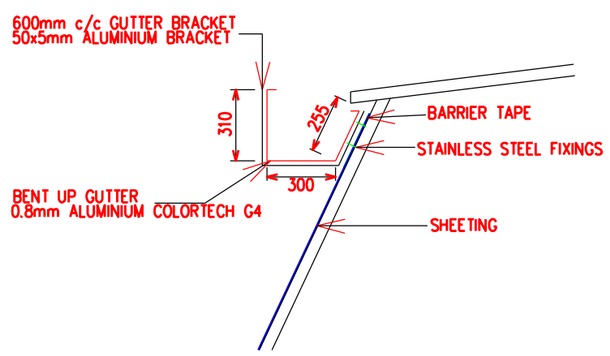

DETAIL A
NTS

ROOF SHEETING:
0.8mm SAFLOK 700 COLORPLUS

SIDE CLADDING:
0.53mm COLORPLUS IBR 686 PROFILE
-NARROW FLUTE OUT

CORNER FLASHING:
MIN. 230mm TAPERED CORNER FLASHING
0.53mm COLORPLUS EXTERNAL TAPERED FLASHING

1.2mm POLYCARBONATE IBR PROFILE
ON NEW GALVANIZED STEEL FRAME

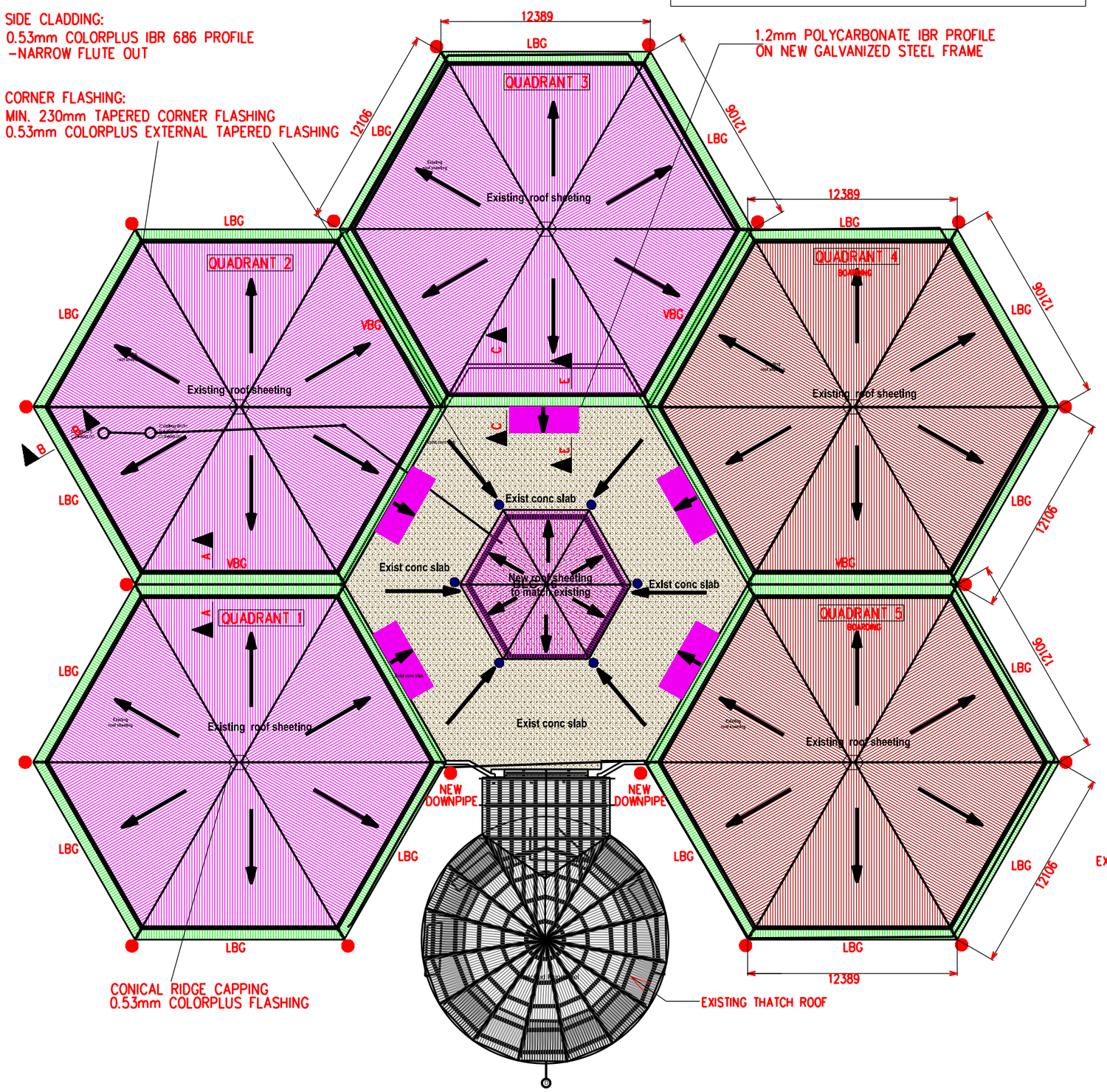

ROOF PLAN
NTS

LEGEND

- REMOVE FASCIAS & INSTALL NEW PERIMETER GUTTER
- DOWNPIPES - 160mm DIAMETER PVC
- FULL BORE OUTLETS
- EXISTING 0.8mm CRAFTLOK ALUMINIUM SHEETING WITH MILL FINISH
- TIMBER BOARD OVER METAL SHEETS
- EXISTING ROOF SLAB

LBG LOWER BOX GUTTER
VBG VALLEY BOX GUTTER

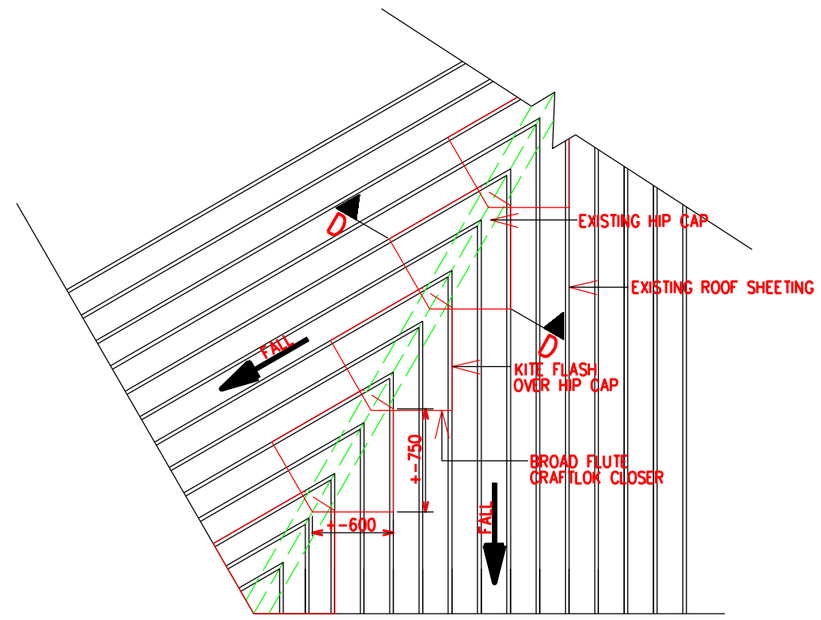

HIP CAP DETAIL
PLAN
NTS

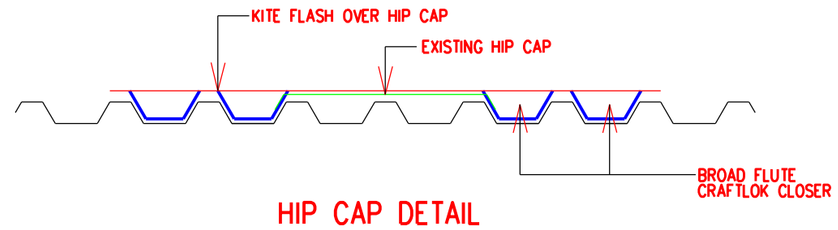

HIP CAP DETAIL
TYPICAL SECTION D-D
NTS

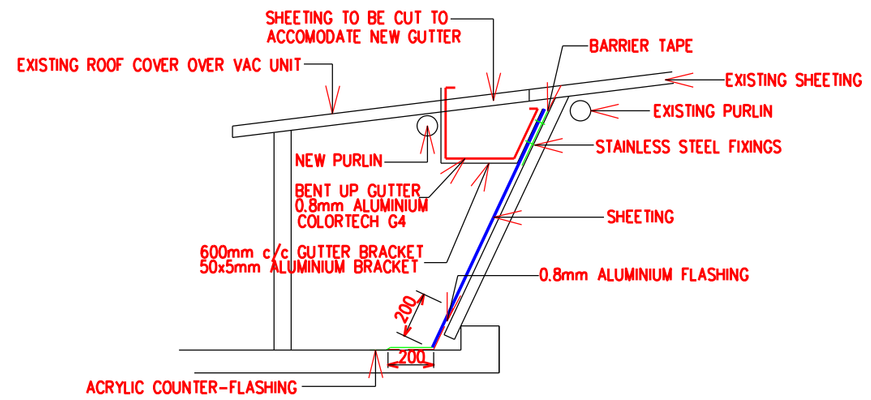

SECTION E-E
NTS

REV	DRAWN	CHKD	APPROVED	DATE	REVISION DESCRIPTION
00	SN	PM	PDC 09/02/22	17/11/21	FIRST ISSUE

CHECKED	AUTHORIZED
P MOABI 09/02/2022	P D CHETTY 10/02/2022
DRAWN	
S NSELE 17/11/2021	Eskom Distribution
SCALE NTS	

BEE HIVE BUILDING
ROOF LAYOUT

ERE00001		
SET	SHEET	REVISION
03	01	00

A2