INDEPENDENT DEVELOPMENT TRUST

SUPPLY AND DELIVERY OF SCHOOL FURNITURE IN THE EASTERN CAPE PROVINCE

QUOTE REFERENCE NO	**IDTECRFQ/15/DOEFURNITURE/2022/23**
Closing Date & Time	**15 DECEMBER 2022** **11:00am**
Enquiries	Name: Nyameko Giqo Tel: 043 711 6000 Email: nyamekog@idt.org.za

INFORMATION BELOW TO BE COMPLETED BY SUPPLIER:

BIDDER DETAILS

SERVICE PROVIDER
NAME…….

CSD
NUMBER……
……

TEL…….....

FAX……..

EMAIL:…….

TERMS AND CONDITIONS

- Quotations must be delivered to the address stated above on or before the quotation closing date and closing time as indicated above. No late quotations will be considered.
- Any amendments to the rates offered or description given must be signed by the person who signed the quotation
- Only authorized representatives of the supplier may duly sign quotations. The IDT will not accept liability for quotations not duly signed.
- No services may be rendered without an official purchase order issued by IDT.
- The IDT reserves the right to award the quotations in whole or part or not to award at ll.
- The IDT General conditions of contract are applicable for all questions unless otherwise specified

1. BACKGROUND

IDT was appointed by the Department of Education in Eastern Cape to procure furniture for various schools in the Eastern Cape. this is implemented to address the dire shortage of furniture in schools. This is an accelerated programme which needs to be coordinated to ensure that delivery takes place prior to the reopening of schools. As part of the objective of the programme, the Department of Education in Eastern Cape intends to empower emerging service providers in the province.

2. SCOPE OF SERVICES/TERMS OF REFERENCE

Supply and Delivery of the Following Furniture:

- Supply of 80 Single combination desks per school for learners.
- Supply 2 of each (Chairs, desk, and cabinet) for the teacher per school.

3. SPECIFICATIONS

- See school furniture specifications below.

SINGLE COMBINATION PRIMARY DESK GRADE 4-6

Note:

1. TOP FRONT SLAT, BACK, SLAT MANUFACTURED FROM 21MM SOLID SALIGNA, HARDWOOD (Eucalyptus Grandls)
2. MAIN STEEL FRAME Ø31.7X.6MM TUBING
3. SEAT SUPPORT RAIL Ø15.05X1.2MM TUBING
4. SEAT Ø15.88X1.2MM TUBING COMPLETE STEEL FRAME BAKED LIGHT GREY EPOXY/POLYESTER POWDER COATING FINISH
5. DURABLE PLUGS FITTED ON ALL OPEN ENDS
6. ALL TIMBER COMPONENT TO BE VARNISHED WITH TWO COATS OF ACID CATALYSED LADOUER
7. FIT ALL TIMBER COMPONENTS TO STEEL FRAME WITH APPROVED M5/M5 BOLTS AND MYLOCK NUTS
8. DESK MUST COMPLY WITH SANS 880:2004 (Edition 3.2)

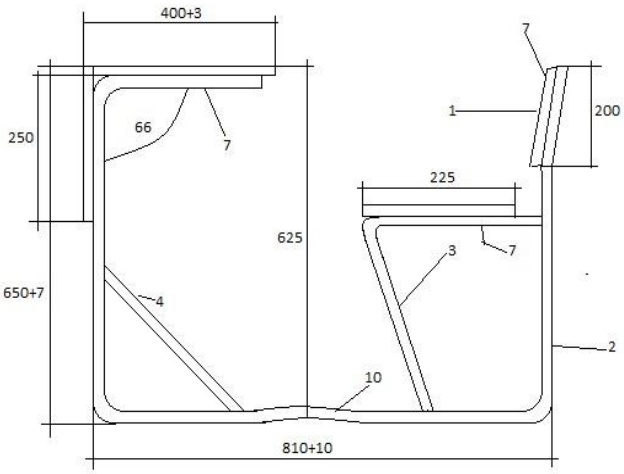

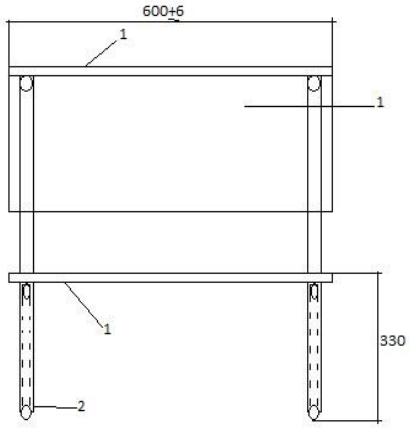

ISSUE	DATE	CHANGE	SPECIFIED TOLERENCES	GRADE 4-6	*SINGLE COMBINATION PRIMARY DESK*	
				X NO MEASUREMENTS TO BE SCALED FROM THE DRAWING		

SINGLE COMBINATION PRIMARY DESK GRADE 1-3

Note:

1. TOP FRONT SLAT, BACK, SLAT MANUFACTURED FROM 21MM SOLID SALIGNA, HARDWOOD (Eucalyptus Grandls)
2. MAIN STEEL FRAME Ø31.7X.6MM TUBING
3. SEAT SUPPORT RAIL Ø15.05X1.2MM TUBING
4. SEAT Ø15.88X1.2MM TUBING COMPLETE STEEL FRAME BAKED LIGHT GREY EPOXY/POLYESTER POWDER COATING FINISH
5. DURABLE PLUGS FITTED ON ALL OPEN ENDS
6. ALL TIMBER COMPONENT TO BE VARNISHED WITH TWO COATS OF ACID CATALYSED LADOUER
7. FIT ALL TIMBER COMPONENTS TO STEEL FRAME WITH APPROVED M5/M5 BOLTS AND MYLOCK NUTS
8. DESK MUST COMPLY WITH SANS 880:2004 (Edition 3.2)

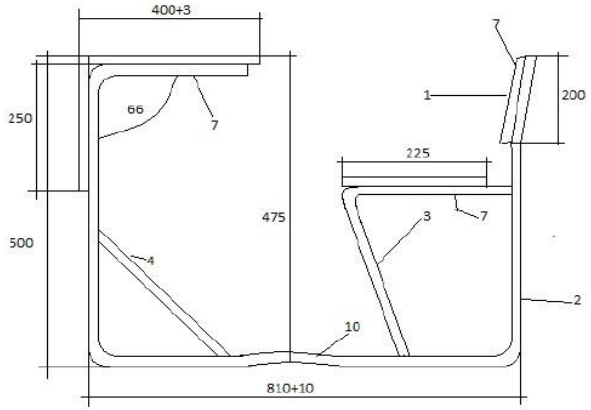

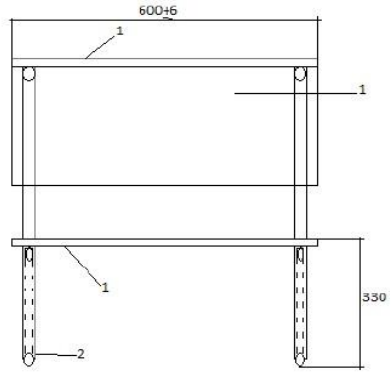

ISSUE	DATE	CHANGE	SPECIFIED TOLERENCES			
				GRADE 1-3 X NO MEASUREMENTS TO BE SCALED FROM THE DRAWING	***SINGLE COMBINATION PRIMARY DESK***	

SINGLE COMBINATION SECONDARY DESK GRADE 7-12

Note:

1. TOP FRONT SLAT, BACK, SLAT MANUFACTURED FROM 21MM SOLID SALIGNA, HARDWOOD (Eucalyptus Grandls)
2. MAIN STEEL FRAME Ø31.7X.6MM TUBING
3. SEAT SUPPORT RAIL Ø15.05X1.2MM TUBING
4. SEAT Ø15.88X1.2MM TUBING COMPLETE STEEL FRAME BAKED LIGHT GREY EPOXY/POLYESTER POWDER COATING FINISH
5. DURABLE PLUGS FITTED ON ALL OPEN ENDS
6. ALL TIMBER COMPONENT TO BE VARNISHED WITH TWO COATS OF ACID CATALYSED LADOUER
7. FIT ALL TIMBER COMPONENTS TO STEEL FRAME WITH APPROVED M5/M5 BOLTS AND MYLOCK NUTS
8. DESK MUST COMPLY WITH SANS 880:2004 (Edition 3.2)

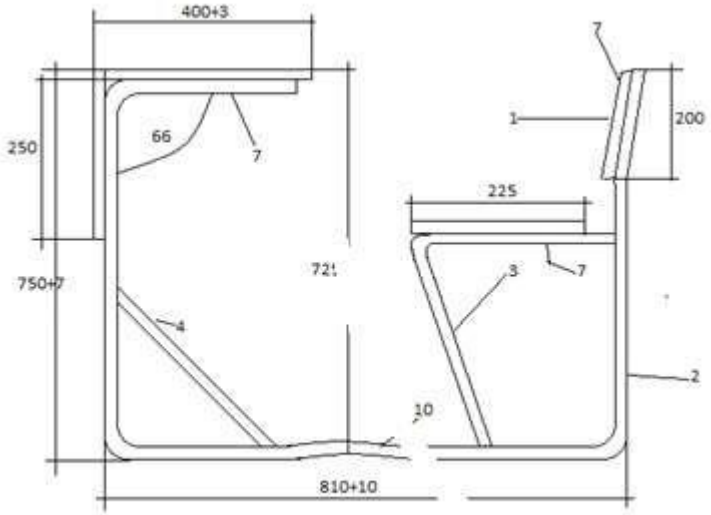

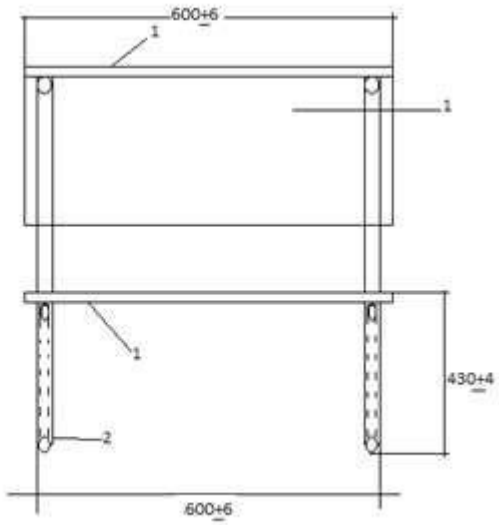

ISSUE	DATE	CHANGE	SPECIFIED TOLERENCES			
				GRADE 7-12 X NO MEASUREMENTS TO BE SCALED FROM THE DRAWING	***SINGLE COMBINATION SECONDARY DESK***	

TEACHER'S CHAIR

Note:

1. SEAT AND BACK APPROVED FOAM (SEAT MINIMUM 23KG) BACK MINIMUM 16KG) AND UPHOLSTERY (100% POLYPROPOLENE – CONTRACT QUALITY) FOAM TO BE GLUED ONTO 16MM PARTICLE BOARD
2. STACKABLE STEEL FRAME ASSEMBLY: 22.23X1.2MM SQUARE TUBING WITH BAKED BLACK EPOXY/POLTIESTER POWDER COATING FINISH.
3. DURABLE PLUGS FITTED TO ALL OPEN STEEL ENDS
4. SEAT FITTED TO STEEL FRAME WITH APPROVED SCREWS
5. BACK FITTED WITH BOLTS & T-NUTS TO STEEL FRAME
6. CHAIR TO COMPLY WITH SANS/SABS 1244:1979

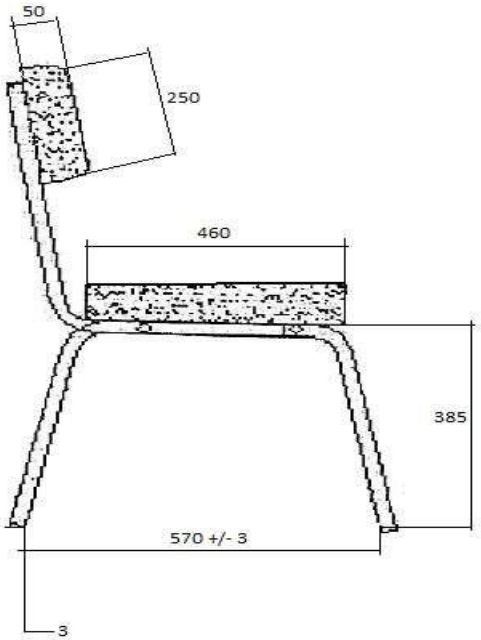

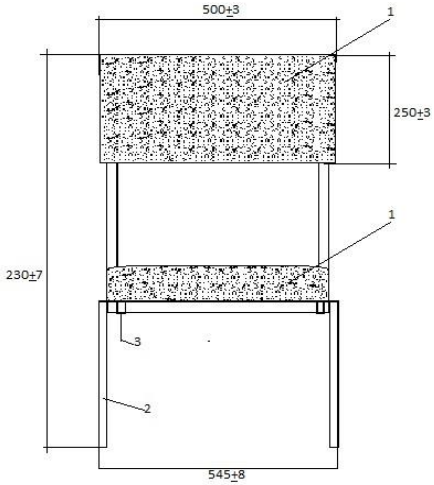

ISSUE	DATE	CHANGE	SPECIFIED TOLERENCES			
				TEACHER'S CHAIR X NO MEASUREMENTS TO BE SCALED FROM THE DRAWING	***UPHOLSTERED CHAIR WITHOUT ARMS***	

STATIONERY CUPBOARD 2- DOOR/S - SHELVES

Note:

1. CARCASS (TOP, BOTTOM, DOORS, SIDES AND SHELVES) MANUFACTURING FROM 16MM DOUBLE MELAMINE FACED (NATURAL OAK) PARTICLE BOARD. ALL EDGES SEALED WITH MATCHING PVC EDGING.
2. BACK (GROOVED AND GLUED IN) MANUFACTURED FROM 12MM DOUBLE SIDED MELAMINE FACED

   (NATURAL OAK) PARTICLE BOARD
3. APPROVED SOLID OAK CUP HANDLE
4. APPROVED ADJUSTABLE FEET
5. APPROVED CONCEALED HINGES
6. CUPBOARD MUST COMPLY WITH SABS 1528-3:1992

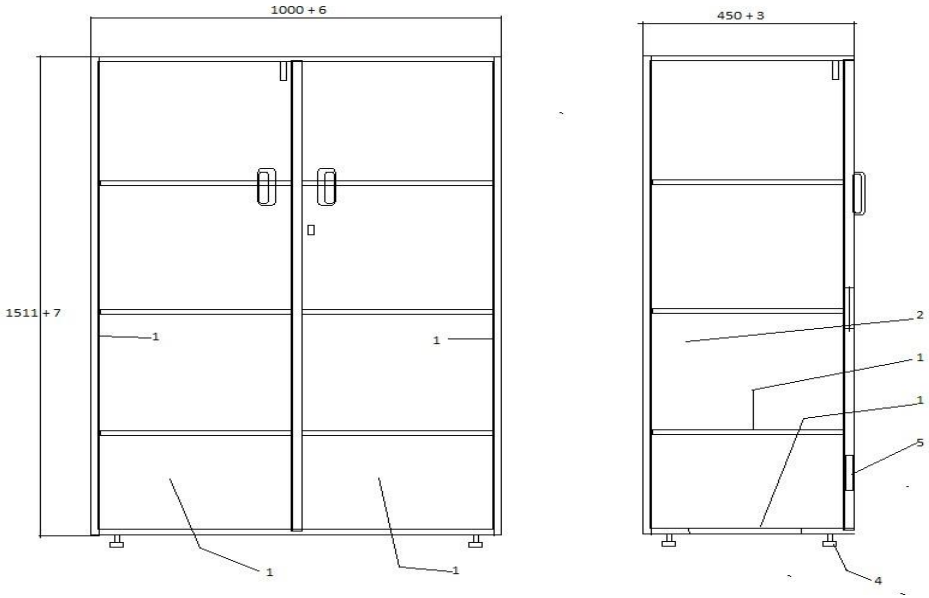

ISSUE	DATE	CHANGE	SPECIFIED TOLERENCES			
			"FIGURE" = +/- 1.2 "FIGURE" = +/- 1.5 "FIGURE" = +/- 1.1 UNSPECIFIED TOLERENCES =+/- 2.0	**HEADS OF DEPT** X NO MEASUREMENTS TO BE SCALED FROM THE DRAWING	***STATIONERY CUPBOARD 2- DOOR/S - SHELVES***	

TEACHER'S OFFICE/STAFF ROOM DESK

Note:

1. TABLE TOP – 21MM SOLID HARDWOOD,
2. MODESTY PANEL AND DRAWER BOX CARCASS MANUFACTURED FROM MATCHING 16MM SUBSTRATE VENEER BOARD ALL EDGES SEALED WITH MATCHING VEENER
3. 32X1.6MM SQUARE TUBING FRAME WITH BAKED BLACK EPOXY/POLYESTER POWDER COATING FINISH
4. DURABLE PLUGS FITTED TO ALL LEGS ENDS
5. 21MM SOLID SALIGNA HARDWOOD DRAWER FRONTS, TOP DRAWER LOCKABLE (APPROVED LOCK)
6. APPROVED HANDLE AND DRAWER SLIDES
7. KNOCK-DOWN "PRISMA" FITTING
8. MODESTY PANEL TO BE SECURED TO STEEL FRAME WITH 4.8X27MM LARGE FLANGE POP REVETS
9. ALL TIMBER COMPONENTS TO BE VARBISHED WITH TWO COATS OF ACD CATALYSED LACQUER
10. FIT TOP TO STEEL FRAME WITH APPROVED SCREWS
11. DESK MUST COMPLY WITH SABS 1528-2:1998 (EDITION 1.1)

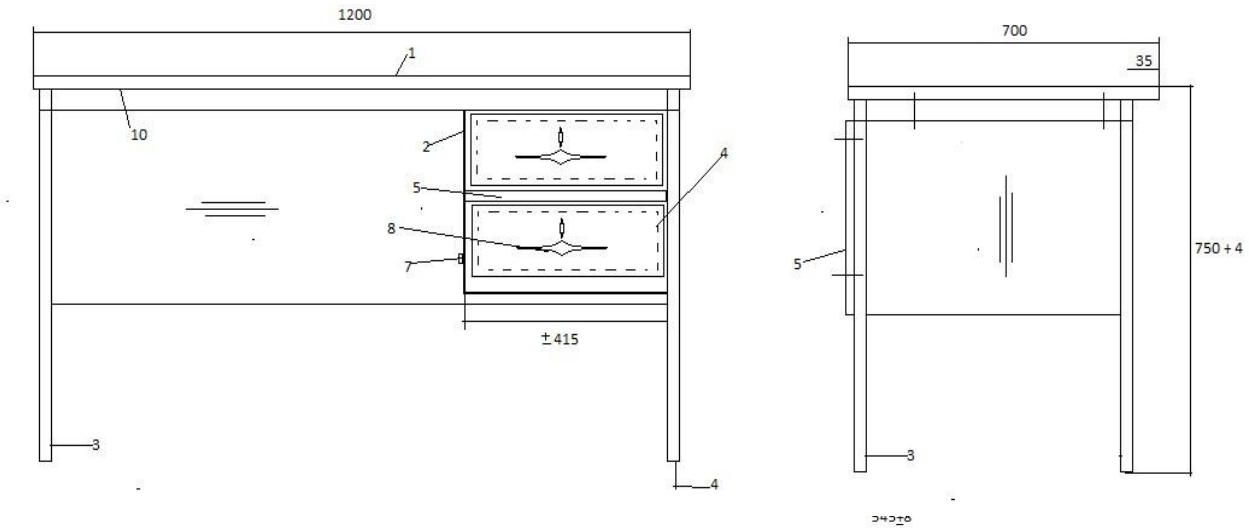

ISSUE	DATE	CHANGE	SPECIFIED TOLERENCES			
			FIGURE- +/- 1.2 FIGURE- +/- 1.2 FIGURE- +/- 1.2	**TEACHER'S DESK** X NO MEASUREMENTS TO BE SCALED FROM THE DRAWING	***TEACHER'S DESK WITH 2 DRAWERS***	

4. SPECIAL CONDITIONS

a. Compliance with SABS requirements

The furniture to be supplied by appointed service providers will be expected to comply fully with the SABS standards and prices quoted must inclusive of any SABS inspection fees. All items should have the SABS mark.

b. Pricing schedule and insurance

In addition to attaching a detailed strategy (plan) for sourcing, storage and distribution of the furniture, all potential suppliers must complete the pricing schedule contained in the Form of Tender reflecting prices for each item. Bidders should be aware that they would be expected to insure the goods up to the point of delivery which is the school.

4.3 Cluster allocation

- Subject to risk assessment a bidder will be eligible for appointment of not more than one (01) cluster.
- In order to achieve the objectives of DoE for development and empowerment of local suppliers, the appointment will be limited to not more than 3 clusters.
- If a bidder is successful in more than one cluster, the IDT reserves the right to do a risk assessment on the ability of the service provider to deliver.
- A contract may, on reasonable and justifiable grounds, be awarded to a bidder that did not score the highest number of points.

5. EVALUATION CRITERIA

Stage 1: Administrative Compliance Requirements

Bidder/s will be eliminated based on the following:

- Proof of registration on the Centralized Supplier Database (CSD)
- Fully Completed and duly signed following Standard Bidding Documents (SBDs)
- **SBD 1, SBD 4 and SBD 6.1 and SBD 6.2** as well as Form of Offer and acceptance (C1.1)
- Service provider's acceptance of terms of reference, (ToR) **by initialling on each page**
- Detailed company profile in relation to school furniture supply and delivery
- Not quoted for all items in a cluster
- A bid offer shall be rejected if the bid document is completed using a pencil. Only black ink must be used to complete the bid Document

In addition, the following condition will apply:

Bidders shall note the following conditions:

- No late, emailed or faxed bids will be accepted. Only hand delivery will be accepted.
- Bid to be valid for a period of ninety days (90) from the bid closing date
- Preferential Procurement Policy Framework Act (PPPFA) principles will apply and IDT Supply Chain Management policy will apply.
- The IDT reserves the right not to appoint the lowest or any bid.
- Any mistake must be neatly crossed out, and counter-signed by the relevant party.
- Prices quoted must be all VAT inclusive, whether the bidder is registered for VAT or not. Bidders must quote for all items in a cluster (See Annexure A).

Stage 2: Functionality Evaluation Criteria

Bidders must achieve a minimum of 60 points on functionality to be evaluated further on Price and BBB-EE

	Description	Total points	Points	Points Claimed
	Proof of Experience in the supply and delivery of school furniture			
	Similar projects (R1 million and above)	30	30	
	Similar projects (R500 000 – R999 999)		20	
	Similar projects (R200 000- R499 999)		15	
	Similar projects (up to R199 999)		10	
	The bidder must submit appointment letter(s) with the value of the contract including proof of delivery per project in order to be considered			
	Reference Letters			
	5 and above reference letters	20	20	
	4 reference letters		15	
	3 reference letters		10	
	1 to 2 reference letters		5	
	The bidders must submit reference letters for previous work done in the past 5 years (no earlier than 2015) on the client letterhead indicating satisfactory completion.			
	Methodology and approach consisting of (i) detailed profile of the organization (ii) Proposed implementation plan (iii) Quality assurance plan (iv) Colour brochure of furniture to be supplied			
	Submission of detailed methodology and approach with four (04) sub-criteria adequately addressed	30	30	
	Submission of detailed methodology and approach with three (03) sub-criteria adequately addressed		20	
	Submission of detailed methodology and approach with two (02) sub-criteria adequately addressed		10	

	Submission of detailed methodology and approach with only one (01) sub-criterion adequately addressed	05		
	Methodology and approach consisting of (i) detailed profile of the organization (ii) Proposed implementation plan (iii) Quality assurance plan which includes pre-delivery, transportation and delivery processes (iv) Colour brochure of furniture to be supplied			
	Locality			
	Head office in EC	20	20	
	Regional/Branch office in EC		10	
	No proof of offices in EC		05	
	Bidders must submit copy of utility bill that indicates address of the company			

Stage 3: Price and BBBEE

Bidders to be evaluated on Price & BBBEE.

Stage 4: Due Diligence

Prior to award to the successful bidder, IDT may conduct a site visit to observe a sample of the furniture, do quality check, verify availability of the staff and equipment. However, a sample of furniture should be delivered to the below-mentioned address as per arrangement with IDT.

6. DELIVERY STRATEGY

- Successful bidder/s will be expected to deliver the goods directly to the warehouse situated at **No. 7 Osmond St, Wilsonia, East London, 5247, Eastern Cape** within the three months of the contract. Delivery will have to be made on school days only and during working hours, i.e., between 08:00 and 15:00 unless otherwise there is a prior arrangement with the school authorities and the school Furniture Unit.

- Prior to the issuing of an order, the supplier will have to agree and provide delivery schedule in writing on the final delivery date of the said order, which will form part of the SLA. Goods damaged in transit (i.e., broken, bent, wrapped, scratched etc) will be rejected on arrival and Delivery Notes amended accordingly and no request of partial payments will be processed.

ANNEXURE A

ITEM	PROJECT NAME	Quantity - CLUSTER 2	RATE PER ITEM	TOTAL (VAT excl)
1	ZWELAKHE SENIOR SECONDARY SCHOOL (Grade 7-12)	Supply 80 Single combination desks		
		2 X Teacher's desk		
		2 X Chair		
		2 X Steel Cabinet)		
2	MNCEBA SENIOR SECONDARY SCHOOL (Grade 7-12)	Supply 80 Single combination desks		
		2 X Teacher's desk		
		2 X Chair		
		2 X Steel Cabinet)		
3	RAMAFOLE SENIOR SECONDARY SCHOOL (Grade 7-12)	Supply 80 Single combination desks		
		2 X Teacher's desk		
		2 X Chair		
		2 X Steel Cabinet)		
4	ZWELITSHA SENIOR SECONDARY SCHOOL (Grade 7-12)	Supply 80 Single combination desks		
		2 X Teacher's desk		
		2 X Chair		
		2 X Steel Cabinet)		
5	BONXA HIGH SCHOOL (Grade 7-12)	Supply 80 Single combination desks		
		2 X Teacher's desk		
		2 X Chair		
		2 X Steel Cabinet)		
			Sub-Total	
			VAT – 15%	
			TOTAL (Incl VAT)	

I / We, the undersigned, here by agree to provide all or any portion of the service at the price and under the terms and conditions shown above, subject to and in accordance with the terms of quotations shown in this invitation document.

Name
:……
……

Authorized
Signature: ……

Date:……

Company:
……
……..

All queries relating to this Quotation may be addressed in writing to the IDT's Representatives in writing **Mr. Nyameko Giqo**, Tel No. 043 711 6000, , e-mail: nyamekog@idt.org.za. Telegraphic, telephonic, telex, facsimile, e-mail and late Quotations **WILL NOT** be accepted.

All Service Providers must submit the original Quotation documentation issued by the IDT. All Service Providers must comply and must be found on the CSD registered report.

7. Broad Based Black Economic Empowerment

THE 80/20 PREFERENCE POINT SYSTEMS WILL APPLY TO THIS BID

A maximum of 80 is allocated for price on the following basis:

80/20

$$Ps = 80\left(1 - \frac{Pt - P\min}{P\min}\right)$$

Where

Ps = Points scored for price of bid under consideration

Pt = Price of bid under consideration

Pmin = Price of lowest acceptable bid

In terms of Regulation 6 (2) and 7 (2) of the Preferential Procurement Regulations, preference points must be awarded to a bidder for attaining the B-BBEE status level of contribution in accordance with the table below:

B-BBEE Status Level of Contributor	Number of points (80/20 system)
1	20
2	18
3	14
4	12
5	8
6	6
7	4
8	2

8. QUOTATION DATA

Clause number	IDTECRFQ/15/DOEFURNITURE/2022/23
	The Employer is IDT
	Contract period: 3 months
	Central Supplier Database (CSD) on Tax Compliance No contract may be awarded to a person who has non-compliant tax status found on CSD or South African Revenue Service ("SARS") certifying the taxes of that person to be in order or that suitable arrangement have been made with SARS"
	Quotation Submissions **IDT, Eastern Cape Offices** **Palm Square Business Park,** **Silverwood House** **Bonza Bay Road** **Beacon Bay** **EAST LONDON** **5241**
	Evaluation of Quotation Offers The bidders will be evaluated further once they have successfully passed the functionality stage and achieved the minimum required points. The evaluation will be based on BBB-EE points scoring and the price as per the IDT score card.

1. **List of Returnable Documents**

List of returnable documents are for ensuring that everything the employer requires a tenderer to submit with his tender is included in, or returned with, his tender submission. Tick below if returnable document is attached or completed properly.

ITEM	LIST OF RETURNABLE DOCUMENTS	TICK IF ATTACHED
1.	B-BBEE Certificate (Original / Original Certified Copy of)	
2.	CSD Registration Report	
3	Preliminary Programme Schedule (Must be attached)	
3.	Copy of Tax PIN Certificate	
4.	Invitation to Bid (SBD 1)	
5.	Bidder's Declaration (SBD 4)	
6.	Preference Points Claim Form in Terms of the Preferential Procurement Regulations 2017 (SBD 6.1)	
7.	Declaration Certificate for Local Content Production and Content for Designated Sectors (SBD 6.2) together with its Annexures C; D and E	

2. C1.1: FORM OF OFFER AND ACCEPTANCE

Tender/Quotation no: ……

Project title:	**Supply 80 Single combination desks, 2x (Teacher's desk, Chair, and Steel Cabinet)**
Tender/Quotation No:	**IDTECRFQ/15/DOEFURNITURE/2022/23**

OFFER BY:

The Employer, identified in the acceptance signature block, has solicited offers to enter into a contract for the procurement of: SUPPLY 80 SINGLE COMBINATION DESKS, 2X (TEACHER'S DESK, CHAIR, AND STEEL CABINET)

RFQ notice no. ……

The Tenderer, identified in the offer signature block, has examined the documents listed in the tender data and addenda thereto as listed in the returnable schedules, and by submitting this offer has accepted the conditions of tender.

By the representative of the Tenderer, deemed to be duly authorized, signing this part of this form of offer and acceptance, the Tenderer offers to perform all of the obligations and liabilities of the Service Provider under the contract including compliance with all its terms and conditions according to their true intent and meaning for an amount to be determined in accordance with the conditions of contract identified in the contract data.

THE OFFERED TOTAL OF THE PRICES INCLUSIVE OF VALUE ADDED TAX IS (where VAT is applicable):

Rand (in words):	
Rand in figures:	R

This offer may be accepted by the Employer by signing the acceptance part of this form of offer and acceptance and returning one copy of this document to the Tenderer before the end of the period of validity stated in the tender data, whereupon the Tenderer becomes the party named as the Project Manager in the conditions of contract identified in the contract data.

THIS OFFER IS MADE BY THE FOLLOWING LEGAL ENTITY: (cross out block which is not applicable)

Company or Close Corporation: …… …… …… …… And: Whose Registration Number is: …… …… And: Whose Income Tax Reference Number is: …… ……	OR	Natural Person or Partnership: …… …… …… …… Whose Identity Number(s) is/are: …… …… Whose Income Tax Reference Number is/are: …… ……

AND WHO IS (if applicable):

Trading under the name and style of: ……

AND WHO IS:

Represented herein, and who is duly authorised to do so, by: Mr/Mrs/Ms: …… In his/her capacity as: ……	**Note:** **A Resolution / Power of Attorney, signed by all the Directors / Members /**

	Partners of the Legal Entity must accompany this Offer, authorising the Representative to make this offer.

SIGNED FOR THE TENDERER:

Name of Representative	Signature	Date

WITNESSED BY:

Name of Witness	Signature	Date

The Tenderer elects as its domicilium citandi et executandi in the Republic of South Africa, where any and all legal notices may be served, as (**physical address**):

……
……

Other Contact Details of the Tenderer are:

Telephone No ……

Cellular Phone No. ……

Fax No ……

Contact Person ……

Postal address
……
……

Banker ……

Branch ……

Branch Code ……

Account number ……

Registration No of Tenderer at Department of Labour

……

ACCEPTANCE

By signing this part of this form of offer and acceptance, the Employer identified below accepts the Tenderer's offer. In consideration thereof, the Employer shall pay the Project Manager the amount due in accordance with the conditions of contract identified in the contract data. Acceptance of the Tenderer's offer shall form an agreement between the Employer and the Tenderer upon the terms and conditions contained in this agreement.

FOR THE EMPLOYER:

Name of Signatory	Signature	Date

Name of Organisation:	**INDEPENDENT DEVELOPMENT TRUST**
Address of Organisation:	**SILVERWOOD HOUSE** **PALM SQUARE BUSINESS PARK** **BONZA BAY ROAD** **BEACON BAY** **EAST LONDON** **5241**

WITNESSED BY:

Name of Witness	Signature	Date

9. NOTES TO BIDDERS

This section outlines basic requirements that must be met. Failure to comply with these requirements or part thereof will result in your quotation being excluded from the evaluation process.

10.CONDITIONS RELATED TO REQUEST FOR QUOTATION

The following conditions apply:

- Proposal must be submitted no later than the "Closing Date" stated on the letter of invitation page and as stated below. Any proposal received after that date will not be considered.
- All proposals must show the bidder's complete legal name and business and mailing addresses and be signed by a person authorized to bind your firm. If requested, your firm shall furnish evidence satisfactory to IDT that the person signing your proposal is duly authorized to do so;
- The request for quotations creates no obligation whatsoever on the part of IDT;
- IDT may amend, recall, or revise the request for quotations at any time;
- quotations submitted in response to this request shall become the property of IDT;
- IDT is also free to accept or reject, in whole or in part, any and all bids in the exercise of our sole judgment and discretion;
- By submitting a proposal in response to this Request for quotations (RFP), the bidder is making a firm offer to IDT. However, neither the RFP nor the bidder's proposal obligates IDT in any way;
- Any and all costs or expenses incurred in the preparation of its proposal shall be borne by the bidder;
- IDT reserves the right not to make an appointment;
- DT's policy of fair distribution of work shall apply;
- Any contractual or other commitment by IDT is contingent upon the execution of a formal written contract or the issuance of a purchase order by IDT;
- Under no circumstances shall IDT be billed, charged, or make payment for any goods or services whatsoever unless and until either:

- A formal written contract is signed by an authorized individual of IDT,

  Or
- IDT issues a purchase order to the successful bidder.
- All bidders are expected to disclose any conflict of interest or appearance of impropriety which might be created in the event your firm was selected as the successful bidder;
- The proposal with all required attachments should be delivered by hand or sent by courier as per the address / details below:-

  Provision of School furniture for Cluster 2
  Independent Development Trust, Palm Square Business Park, Silverwood House, Bonza Bay Road,
  Beacon Bay, East London

  i. The deadline for submission of proposal is strictly at **11h00 on Thursday, 15 December 2022;**
  ii. No late submissions will be accepted or considered;
  iii. IDT selection of qualifying quotations shall be at IDT's sole discretion and shall be final;
  iv. Quotations with all required documents should be deposited into a tender box and deposited by the closing date stated above.

11. ADDITIONAL INFORMATION

CONTACT PERSONS AND DELIVERY ADDRESS

Proposals must be hand-delivered to the addresses mentioned below. The persons mentioned below can be contacted for clarity purposes.

PROVINCE	CONTACT PERSON FOR ENQUIRIES	CONTACT NUMBERS AND PHYSICAL ADDRESS	E-MAIL ADDRESS
Eastern Cape	Nyameko Giqo (Technical)	043 711 6000 Palm Square Business Park, Bonza Bay Road, Silverwood House, Beacon Bay, East London.	nyamekog@idt.org.za
	Nomnikelo Dyasi (SCM)		Nomnikelod@idt.org.za

12. FRONTING

- IDT, in compliance with regulations, supports the spirit of Broad- Based Black Economic Empowerment and recognizes that real empowerment can only be achieved through individuals and businesses conducting themselves in accordance with the Constitution and in an honest, fair, equitable, transparent and legally compliant manner. Against this background the IDT condemns any form of fronting.
- IDT, in ensuring that service providers conduct themselves in an honest manner will, as part of the bid evaluation processes, conduct or initiate the necessary enquiries/investigations to determine that accuracy of the representation made in bid documents. Should any of the fronting indicators as contained in the Guidelines on Complex Structures and Transactions and Fronting, issued by the Department of Trade and Industry (DTI), be established during such enquiry/investigation, the onus will be on the service provider/contractor to prove that fronting does not exist. Failure to do so within 14 days from date of notification may invalidate the bid/contract and may also result in restriction of the service provider/contractor to conduct business with the public sector for a period not exceeding ten years, in addition to any other remedies IDT may have against the service provider/contractor concerned.

13. PROHIBITION OF RESTRICTIVE PRACTICES

In terms of section 4(1) of the Competition Act No. 89 of 1998, as amended, an agreement between, or concerted practice by, firms, or a decision by an association of firms, is prohibited if it is between parties in a horizontal relationship and if a service provider(s) is (are) or a contractor(s) was/were involved in:

- Directly or indirectly fixing a purchase or selling price or any other trading condition
- Dividing markets by allocating customers, suppliers, territories or specific types of goods or services; or
- Collusive bidding.

If a service provider(s) or contractor(s), in the judgment of the purchaser, has/have engaged in any of the restrictive practices referred to above, the purchaser may, without prejudice to any other remedy provided for, invalidate the bid(s) for such item(s) offered or terminate the contract in whole or in part and refer the matter to the Competition Commission for investigation and possible imposition of administrative penalties as contemplated in the Competition Act No. 89 of 1998.

Any communication either by facsimile, letter or electronic mail or any other form of correspondence to any official or representative of IDT, other than SCM officials, in respect of this bid between the closing date and the award of the bid by the service provider is prohibited.

The Supplier shall not cede this Agreement without the written permission of IDT. The Supplier shall not, without the prior written consent of IDT, subcontract the rendering of the Services to a third party.

14. SUBMISSION OF QUOTATIONS

- Any proposal submitted by telegram, facsimile, or only by electronic means such as email, **will not be accepted** for consideration.
- The proposals must be submitted by **Service Provider**, in the form of an **original hard copy x 1**.

- Bidders must submit their bid proposals in line with the bid specifications and the attached **Annexures.** Failure to comply shall invalidate the bid.
- There will be no briefing session
- The proposal must be in a sealed envelope or package, and must be clearly marked as follows:

RFQ No: **IDTECRFQ/15/DOEFURNITURE/2022/23**: 07 December 2022
Description: SCHOOL FURNITURE
Bid Closing date and Time: 15 December 2022 @**11:h00**

The closing date for submission of bids is 15 December 2022 by no later than 11h00 and duly completed bid documents sealed in an envelope clearly marked with the name of the bid number shall be submitted in the bid box at IDT's Regional Offices. All bids must be deposited in the Tender Box located at the reception area of the Independent Development trust (IDT) at the following address:

IDT Offices
Palm Square Business Park
Silverwood House
Bonza Bay Road
Beacon Bay
5201

NB: Please note that a proposal will not be considered for evaluation if it's received late at the address indicated in the bid documents, e.g. after the closing date and time or dropped in another tender box (e.g. IDT tender box) and then received late by IDT. Late tenders will be returned; where applicable, unopened to the service provider or at 11:00 will be sent back with the service provider.

The Independent Development Trust reserves the right not to select a service provider and/or to withdraw this advert at any time prior to the selection of a service provider.

15. COMMUNICATION

- Any questions are to be submitted by email not later than **three business days** before the closing date of the Bid. Questions received after this date will not be entertained by IDT.

- After the closing date, only Supply Chain Management (SCM) Unit will communicate with service providers for, among others, where bid clarity is sought, to obtain information or to extend the validity period. See sub-par 16.3 for prohibited practice.
- Enquiries of a technical nature should be directed to:

Nyameko Giqo
Acting Programme Manager
Tel: 043 – 711 6000
E-mail: nyamekog@idt.org.za

11.1 Enquiries related to the registration and submission of proposals must be directed to Supply Chain Specialist: **nomnikelod@idt.org.za**

16. CERTIFICATION OF CORRECTNESS OF INFORMATION SUPPLIED IN THIS DOCUMENT

I/we, THE UNDERSIGNED, WHO WARRANT THAT I AM DULY AUTHORISED TO DO SO ON BEHALF OF THE BIDDER, CERTIFY THAT THE INFORMATION SUPPLIED IN TERMS OF THIS DOCUMENT IS CORRECT AND TRUE, THAT THE SIGNATORY TO THIS DOCUMENT IS DULY AUTHORISED AND ACKNOWLEDGE THAT:

(1) The bidder will furnish documentary proof regarding any bidding issue to the satisfaction of the Province, if requested to do so.

(2) If the information supplied is found to be incorrect and/or false then the Province, in addition to any remedies it may have, may:-

(a) Recover from the contractor all costs, losses or damages incurred or sustained by the Province as a result of the award of the contract, and/or

(b) Cancel the contract and claim any damages which the Province may suffer by having to make less favourable arrangements after such cancellation.

SIGNED ON THIS ..... **DAY OF** ..... **20** ..... **AT** ……

.....

SIGNATURE OF BIDDER OR DULY AUTHORISED REPRESENTATIVE **NAME IN BLOCK LETTERS**

ON BEHALF OF (BIDDER'S NAME) .....

CAPACITY OF SIGNATORY .....

NAME OF CONTACT PERSON (IN BLOCK LETTERS, PLEASE) ……..

…….....

POSTAL ADDRESS ……..

.....

TELEPHONE NUMBER: .....

FAX NUMBER: .....

CELLULAR PHONE NUMBER: .....

E-MAIL ADDRESS: …….…….....

SBD 1

PART A

INVITATION TO BID

YOU ARE HEREBY INVITED TO BID FOR REQUIREMENTS OF THE (*NAME OF DEPARTMENT/ PUBLIC ENTITY*)					
BID NUMBER:	**IDTECRFQ/15/DOEFURNITURE/2022/23**	CLOSING DATE:	**15 DECEMBER 2022**	CLOSING TIME:	**11:00**
DESCRIPTION	PROCUREMENT OF SCHOOL FURNITURE				
BID RESPONSE DOCUMENTS MAY BE DEPOSITED IN THE BID BOX SITUATED AT *(STREET ADDRESS)*					
Palm square Business Park, Silverwood House					
Beacon Bay, East London					
5241					

BIDDING PROCEDURE ENQUIRIES MAY BE DIRECTED TO		**TECHNICAL ENQUIRIES MAY BE DIRECTED TO:**	
CONTACT PERSON	**Nyameko Giqo**	CONTACT PERSON	**Nomnikelo Dyasi**
TELEPHONE NUMBER	**(043) 711 6000**	TELEPHONE NUMBER	**(043) 711 6000**
FACSIMILE NUMBER		FACSIMILE NUMBER	
E-MAIL ADDRESS	**nyamekog@idt.org.za**	E-MAIL ADDRESS	**NomnikeloD@idt.org.za**

SUPPLIER INFORMATION					
NAME OF BIDDER					
POSTAL ADDRESS					
STREET ADDRESS					
TELEPHONE NUMBER	CODE		NUMBER		
CELLPHONE NUMBER					
FACSIMILE NUMBER	CODE		NUMBER		
E-MAIL ADDRESS					
VAT REGISTRATION NUMBER					
SUPPLIER COMPLIANCE STATUS	TAX COMPLIANCE SYSTEM PIN:		**OR**	CENTRAL SUPPLIER DATABASE No:	MAAA
B-BBEE STATUS LEVEL	TICK APPLICABLE BOX]		B-BBEE STATUS	[TICK APPLICABLE BOX]	

VERIFICATION CERTIFICATE	☐ Yes ☐ No	LEVEL SWORN AFFIDAVIT	☐ Yes ☐ No
[A B-BBEE STATUS LEVEL VERIFICATION CERTIFICATE/ SWORN AFFIDAVIT (FOR EMES & QSEs) MUST BE SUBMITTED IN ORDER TO QUALIFY FOR PREFERENCE POINTS FOR B-BBEE]			
ARE YOU THE ACCREDITED REPRESENTATIVE IN SOUTH AFRICA FOR THE GOODS /SERVICES /WORKS OFFERED?	☐Yes ☐No [IF YES ENCLOSE PROOF]	***ARE YOU A FOREIGN BASED SUPPLIER FOR THE GOODS /SERVICES /WORKS OFFERED?***	☐ Yes ☐ No [IF YES, ANSWER THE QUESTIONNAIRE BELOW]
QUESTIONNAIRE TO BIDDING FOREIGN SUPPLIERS			
IS THE ENTITY A RESIDENT OF THE REPUBLIC OF SOUTH AFRICA (RSA)? ☐ YES ☐ NO			
DOES THE ENTITY HAVE A BRANCH IN THE RSA? ☐ YES ☐ NO			
DOES THE ENTITY HAVE A PERMANENT ESTABLISHMENT IN THE RSA? ☐ YES ☐ NO			
DOES THE ENTITY HAVE ANY SOURCE OF INCOME IN THE RSA? ☐ YES ☐ NO			
IS THE ENTITY LIABLE IN THE RSA FOR ANY FORM OF TAXATION? ☐ YES ☐ NO			
IF THE ANSWER IS "NO" TO ALL OF THE ABOVE, THEN IT IS NOT A REQUIREMENT TO REGISTER FOR A TAX COMPLIANCE STATUS SYSTEM PIN CODE FROM THE SOUTH AFRICAN REVENUE SERVICE (SARS) AND IF NOT REGISTER AS PER 2.3 BELOW.			

PART B

TERMS AND CONDITIONS FOR BIDDING

1. BID SUBMISSION:
1.1. BIDS MUST BE DELIVERED BY THE STIPULATED TIME TO THE CORRECT ADDRESS. LATE BIDS WILL NOT BE ACCEPTED FOR CONSIDERATION. 1.2. **ALL BIDS MUST BE SUBMITTED ON THE OFFICIAL FORMS PROVIDED–(NOT TO BE RE-TYPED) OR IN THE MANNER PRESCRIBED IN THE BID DOCUMENT.** 1.3. THIS BID IS SUBJECT TO THE PREFERENTIAL PROCUREMENT POLICY FRAMEWORK ACT, 2000 AND THE PREFERENTIAL PROCUREMENT REGULATIONS, 2017, THE GENERAL CONDITIONS OF CONTRACT (GCC) AND, IF APPLICABLE, ANY OTHER SPECIAL CONDITIONS OF CONTRACT. 1.4. **THE SUCCESSFUL BIDDER WILL BE REQUIRED TO FILL IN AND SIGN A WRITTEN CONTRACT FORM (SBD7).**
2. TAX COMPLIANCE REQUIREMENTS
2.1 BIDDERS MUST ENSURE COMPLIANCE WITH THEIR TAX OBLIGATIONS. 2.2 BIDDERS ARE REQUIRED TO SUBMIT THEIR UNIQUE PERSONAL IDENTIFICATION NUMBER (PIN) ISSUED BY SARS TO ENABLE THE ORGAN OF STATE TO VERIFY THE TAXPAYER'S PROFILE AND TAX STATUS. 2.3 APPLICATION FOR TAX COMPLIANCE STATUS (TCS) PIN MAY BE MADE VIA E-FILING THROUGH THE SARS WEBSITE WWW.SARS.GOV.ZA. 2.4 BIDDERS MAY ALSO SUBMIT A PRINTED TCS CERTIFICATE TOGETHER WITH THE BID. 2.5 IN BIDS WHERE CONSORTIA / JOINT VENTURES / SUB-CONTRACTORS ARE INVOLVED, EACH PARTY MUST SUBMIT A SEPARATE TCS CERTIFICATE / PIN / CSD NUMBER. 2.6 WHERE NO TCS PIN IS AVAILABLE BUT THE BIDDER IS REGISTERED ON THE CENTRAL SUPPLIER DATABASE (CSD), A CSD NUMBER MUST BE PROVIDED. 2.7 NO BIDS WILL BE CONSIDERED FROM PERSONS IN THE SERVICE OF THE STATE, COMPANIES WITH DIRECTORS WHO ARE PERSONS IN THE SERVICE OF THE STATE, OR CLOSE CORPORATIONS WITH MEMBERS PERSONS IN THE SERVICE OF THE STATE."

NB: FAILURE TO PROVIDE / OR COMPLY WITH ANY OF THE ABOVE PARTICULARS MAY RENDER THE BID INVALID.

SIGNATURE OF BIDDER: ……

CAPACITY UNDER WHICH THIS BID IS SIGNED: ……

(Proof of authority must be submitted e.g. company resolution)

DATE: ……...

SBD 4

BIDDER'S DISCLOSURE

1. PURPOSE OF THE FORM

Any person (natural or juristic) may make an offer or offers in terms of this invitation to bid. In line with the principles of transparency, accountability, impartiality, and ethics as enshrined in the Constitution of the Republic of South Africa and further expressed in various pieces of legislation, it is required for the bidder to make this declaration in respect of the details required hereunder.

Where a person/s are listed in the Register for Tender Defaulters and / or the List of Restricted Suppliers, that person will automatically be disqualified from the bid process.

2. Bidder's declaration

2.1 Is the bidder, or any of its directors / trustees / shareholders / members / partners or any person having a controlling interest1 in the enterprise, employed by the state? **YES/NO**

2.1.1 If so, furnish particulars of the names, individual identity numbers, and, if applicable, state employee numbers of sole proprietor/ directors / trustees / shareholders / members/ partners or any person having a controlling interest in the enterprise, in table below.

Full Name	**Identity Number**	**Name of State institution**

1 The power, by one person or a group of persons holding the majority of the equity of an enterprise, alternatively, the person/s having the deciding vote or power to influence or to direct the course and decisions of the enterprise.

2.2 Do you, or any person connected with the bidder, have a relationship with any person who is employed by the procuring institution? **YES/NO**

2.2.1 If so, furnish particulars:

……

……

2.3 Does the bidder or any of its directors / trustees / shareholders / members / partners or any person having a controlling interest in the enterprise have any interest in any other related enterprise whether or not they are bidding for this contract?

YES/NO

2.3.1 If so, furnish particulars:

…….

…….

3 DECLARATION

I, the undersigned, (name)……. in submitting the accompanying bid, do hereby make the following statements that I certify to be true and complete in every respect:

3.1 I have read and I understand the contents of this disclosure;

3.2 I understand that the accompanying bid will be disqualified if this disclosure is found not to be true and complete in every respect;

3.3 The bidder has arrived at the accompanying bid independently from, and without consultation, communication, agreement or arrangement with any competitor. However, communication between partners in a joint venture or consortium2 will not be construed as collusive bidding.

3.4 In addition, there have been no consultations, communications, agreements or arrangements with any competitor regarding the quality, quantity, specifications, prices, including methods, factors or formulas used to calculate prices, market allocation, the intention or decision to submit or not to submit the bid, bidding with the

intention not to win the bid and conditions or delivery particulars of the products or services to which this bid invitation relates.

3.4 The terms of the accompanying bid have not been, and will not be, disclosed by the bidder, directly or indirectly, to any competitor, prior to the date and time of the official bid opening or of the awarding of the contract.

3.5 There have been no consultations, communications, agreements or arrangements made by the bidder with any official of the procuring institution in relation to this procurement process prior to and during the bidding process except to provide clarification on the bid submitted where so required by the institution; and the bidder was not involved in the drafting of the specifications or terms of reference for this bid.

3.6 I am aware that, in addition and without prejudice to any other remedy provided to combat any restrictive practices related to bids and contracts, bids that are suspicious will be reported to the Competition Commission for investigation and possible imposition of administrative penalties in terms of section 59 of the Competition Act No 89 of 1998 and or may be reported to the National Prosecuting Authority (NPA) for criminal investigation and or may be restricted from conducting business with the public sector for a period not exceeding ten (10) years in terms of the Prevention and Combating of Corrupt Activities Act No 12 of 2004 or any other applicable legislation.

I CERTIFY THAT THE INFORMATION FURNISHED IN PARAGRAPHS 1, 2 and 3 ABOVE IS CORRECT.

I ACCEPT THAT THE STATE MAY REJECT THE BID OR ACT AGAINST ME IN TERMS OF PARAGRAPH 6 OF PFMA SCM INSTRUCTION 03 OF 2021/22 ON PREVENTING AND COMBATING ABUSE IN THE SUPPLY CHAIN MANAGEMENT SYSTEM SHOULD THIS DECLARATION PROVE TO BE FALSE.

…… ..……..

Signature Date

…… ……

Position Name of bidder

[3] **Joint venture or Consortium means an association of persons for the purpose of combining their expertise, property, capital, efforts, skill and knowledge in an activity for the execution of a contract.**

SBD 6.1

PREFERENCE POINTS CLAIM FORM IN TERMS OF THE PREFERENTIAL PROCUREMENT REGULATIONS 2017

This preference form must form part of all bids invited. It contains general information and serves as a claim form for preference points for Broad-Based Black Economic Empowerment (B-BBEE) Status Level of Contribution

NB: BEFORE COMPLETING THIS FORM, BIDDERS MUST STUDY THE GENERAL CONDITIONS, DEFINITIONS AND DIRECTIVES APPLICABLE IN RESPECT OF B-BBEE, AS PRESCRIBED IN THE PREFERENTIAL PROCUREMENT REGULATIONS, 2017.

---

1. GENERAL CONDITIONS

1.1 The following preference point systems are applicable to all bids:

- the 80/20 system for requirements with a Rand value of up to R50 000 000 (all applicable taxes included); and
- the 90/10 system for requirements with a Rand value above R50 000 000 (all applicable taxes included).

1.2

a) The value of this bid is estimated to not exceed R50 000 000 (all applicable taxes included) and therefore the 80/20 preference point system shall be applicable; or

b) Either the 80/20 or 90/10 preference point system will be applicable to this tender (*delete whichever is not applicable for this tender*).

1.3 Points for this bid shall be awarded for:

(a) Price; and

(b) B-BBEE Status Level of Contributor.

1.4 The maximum points for this bid are allocated as follows:

	POINTS
PRICE	
B-BBEE STATUS LEVEL OF CONTRIBUTOR	
Total points for Price and B-BBEE must not exceed	**100**

1.5 Failure on the part of a bidder to submit proof of B-BBEE Status level of contributor together with the bid, will be interpreted to mean that preference points for B-BBEE status level of contribution are not claimed.

1.6 The purchaser reserves the right to require of a bidder, either before a bid is adjudicated or at any time subsequently, to substantiate any claim in regard to preferences, in any manner required by the purchaser.

DEFINITIONS

(a) **"B-BBEE"** means broad-based black economic empowerment as defined in section 1 of the Broad-Based Black Economic Empowerment Act;

(b) "**B-BBEE status level of contributor"** means the B-BBEE status of an entity in terms of a code of good practice on black economic empowerment, issued in terms of section 9(1) of the Broad-Based Black Economic Empowerment Act;

(c) **"bid"** means a written offer in a prescribed or stipulated form in response to an invitation by an organ of state for the provision of goods or services, through price quotations, advertised competitive bidding processes or proposals;

(d) **"Broad-Based Black Economic Empowerment Act"** means the Broad-Based Black Economic Empowerment Act, 2003 (Act No. 53 of 2003);

(e) **"EME"** means an Exempted Micro Enterprise in terms of a code of good practice on black economic empowerment issued in terms of section 9 (1) of the Broad-Based Black Economic Empowerment Act;

(f) **"functionality"** means the ability of a tenderer to provide goods or services in accordance with specifications as set out in the tender documents.

(g) **"prices"** includes all applicable taxes less all unconditional discounts;

(h) **"proof of B-BBEE status level of contributor"** means:

1) B-BBEE Status level certificate issued by an authorized body or person;

2) A sworn affidavit as prescribed by the B-BBEE Codes of Good Practice;

3) Any other requirement prescribed in terms of the B-BBEE Act;

(i) **"QSE"** means a qualifying small business enterprise in terms of a code of good practice on black economic empowerment issued in terms of section 9 (1) of the Broad-Based Black Economic Empowerment Act;

(j) **"rand value"** means the total estimated value of a contract in Rand, calculated at the time of bid invitation, and includes all applicable taxes;

2. POINTS AWARDED FOR PRICE

2.1 THE 80/20 OR 90/10 PREFERENCE POINT SYSTEMS

A maximum of 80 or 90 points is allocated for price on the following basis:

80/20 **or** **90/10**

$$Ps = 80\left(1 - \frac{Pt - P\min}{P\min}\right) \quad \text{or} \quad Ps = 90\left(1 - \frac{Pt - P\min}{P\min}\right)$$

Where

Ps = Points scored for price of bid under consideration

Pt = Price of bid under consideration

Pmin = Price of lowest acceptable bid

3. POINTS AWARDED FOR B-BBEE STATUS LEVEL OF CONTRIBUTOR

3.1 In terms of Regulation 6 (2) and 7 (2) of the Preferential Procurement Regulations, preference points must be awarded to a bidder for attaining the B-BBEE status level of contribution in accordance with the table below:

B-BBEE Status Level of Contributor	Number of points (90/10 system)	Number of points (80/20 system)
1	10	20
2	9	18
3	6	14
4	5	12
5	4	8
6	3	6
7	2	4
8	1	2
Non-compliant contributor	0	0

4. BID DECLARATION

4.1 Bidders who claim points in respect of B-BBEE Status Level of Contribution must complete the following:

5. B-BBEE STATUS LEVEL OF CONTRIBUTOR CLAIMED IN TERMS OF PARAGRAPHS 1.4 AND 4.1

5.1 B-BBEE Status Level of Contributor: . = ……(maximum of 10 or 20 points)

(Points claimed in respect of paragraph 7.1 must be in accordance with the table reflected in paragraph 4.1 and must be substantiated by relevant proof of B-BBEE status level of contributor.

6. SUB-CONTRACTING

6.1 Will any portion of the contract be sub-contracted?

(***Tick applicable box***)

YES		NO	

6.1.1 If yes, indicate:

i) What percentage of the contract will be subcontracted.....…….……%

ii) The name of the sub-contractor……..

iii) The B-BBEE status level of the sub-contractor.....……..

iv) Whether the sub-contractor is an EME or QSE

(Tick applicable box)

YES		NO	

v) Specify, by ticking the appropriate box, if subcontracting with an enterprise in terms of Preferential Procurement Regulations,2017:

Designated Group: An EME or QSE which is at last 51% owned by:	EME √	QSE √
Black people		
Black people who are youth		
Black people who are women		
Black people with disabilities		
Black people living in rural or underdeveloped areas or townships		
Cooperative owned by black people		
Black people who are military veterans		
OR		
Any EME		
Any QSE		

7. **DECLARATION WITH REGARD TO COMPANY/FIRM**

7.1 Name of company/firm:……..

7.2 VAT registration number:……

7.3 Company registration number:…….…….…….…….

7.4 TYPE OF COMPANY/ FIRM

- ☐ Partnership/Joint Venture / Consortium
- ☐ One person business/sole propriety
- ☐ Close corporation
- ☐ Company
- ☐ (Pty) Limited

[TICK APPLICABLE BOX]

7.5 DESCRIBE PRINCIPAL BUSINESS ACTIVITIES

……
……
……

……
……..

7.6 COMPANY CLASSIFICATION

- ☐ Manufacturer
- ☐ Supplier
- ☐ Professional service provider
- ☐ Other service providers, e.g. transporter, etc.

[*TICK APPLICABLE BOX*]

7.7 Total number of years the company/firm has been in business:……

7.8 I/we, the undersigned, who is / are duly authorised to do so on behalf of the company/firm, certify that the points claimed, based on the B-BBE status level of contributor indicated in paragraphs 1.4 and 6.1 of the foregoing certificate, qualifies the company/ firm for the preference(s) shown and I / we acknowledge that:

i) The information furnished is true and correct;

ii) The preference points claimed are in accordance with the General Conditions as indicated in paragraph 1 of this form;

iii) In the event of a contract being awarded as a result of points claimed as shown in paragraphs 1.4 and 6.1, the contractor may be required to furnish documentary proof to the satisfaction of the purchaser that the claims are correct;

iv) If the B-BBEE status level of contributor has been claimed or obtained on a fraudulent basis or any of the conditions of contract have not been fulfilled, the purchaser may, in addition to any other remedy it may have –

(a) disqualify the person from the bidding process;

(b) recover costs, losses or damages it has incurred or suffered as a result of that person's conduct;

(c) cancel the contract and claim any damages which it has suffered as a result of having to make less favourable arrangements due to such cancellation;

(d) recommend that the bidder or contractor, its shareholders and directors, or only the shareholders and directors who acted on a

fraudulent basis, be restricted by the National Treasury from obtaining business from any organ of state for a period not exceeding 10 years, after the *audi alteram partem* (hear the other side) rule has been applied; and

(e) forward the matter for criminal prosecution.

WITNESSES 1. …….. 2. ……	…… SIGNATURE(S) OF BIDDERS(S) DATE: …….. ADDRESS …….

AFFIDAVIT FOR EMEs

Attached hereto is my / OUR ORIGINAL (CERTIFIED COPY) B-BBEE Certificate issued by a verification agency accredited by SANAS/ Original Sworn Affidavit. My failure to submit the certificate with my / our tender document will lead to the conclusion that I am / we do not wish to claim preference points in terms of my / our B-BBEE status.

CENTRAL SUPPLIER DATABASE (CSD) ON TAX COMPLIANCE

IMPORTANT NOTES:

1. The following is an abstract from the Preferential Procurement Regulations 2017 promulgated with the Preferential Policy Framework Act No 5 of 2000:

"CSD Tax Compliance''

No contract may be awarded to a person who has non-compliant tax status found on CSD or South African Revenue Service ("SARS") certifying the taxes of that person to be in order or that suitable arrangement have been made with SARS"

Copy of Tax Clearance Certificate with PIN

Failure to comply with CSD tax compliance will inevitably invalidate the tender.

CONDITIONS OF BID

1. I/We hereby bid to supply all or any of the supplies and/or to render all or any of the services described in the attached documents to the KwaZulu-Natal Provincial Administration (hereinafter called the "Province") on the terms and conditions and be in accordance with the specifications stipulated in the bid documents (and which shall be taken as part of and be incorporated into this bid) at the prices and on the terms regarding time for delivery and/or execution inserted therein.

2. I/we agree that:

   (a) the offer herein shall remain binding upon me and open for acceptance by the Province during the validity period indicated and calculated from the closing time of the bid;

   (b) this bid and its acceptance shall be subject to Treasury Regulations 16A issued in terms of the Public Finance Management Act, 1999, the National Treasury General Conditions of Contract and Standard Bidding Documents, the KwaZulu-Natal Supply Chain Management Policy Framework, the Provincial Treasury issued Practice Notes, and the KwaZulu-Natal Conditions of Contract, with which I/we am fully acquainted;

   (c) if I/we withdraw my bid within the period for which I/we have agreed that the bid shall remain open for acceptance, or fail to fulfil the contract when called upon to do so, the Province may, without prejudice to its other rights, agree to the withdrawal of my bid or cancel the contract that may have been entered into between me and the Province. I/we will then pay to the Province any additional expenses incurred by the Province having either to accept any less favourable bid or, if fresh bids have to be invited, the additional expenditure incurred by the invitation of fresh bids and by the subsequent acceptance of any less favourable bid. The Province shall have the right to recover such additional expenditure by set-off against monies which may be due to me under this or any other bid or contract or against any guarantee or deposit that

may have been furnished by me or on my behalf for the due fulfilment of this or any other bid or contract and pending the ascertainment of the amount of such additional expenditure to retain such monies, guarantee or deposit as security for any loss the Province may sustain by reason of my default;

(d) if my bid is accepted, the acceptance may be communicated to me by registered post, and that the South African Post Office Limited shall be treated as delivery agent to me;

(e) the law of the Republic of South Africa shall govern the contract created by the acceptance of my bid and I choose *domicilium citandi et executandi* in the Republic at (full physical address) :

.....

.....

3. I/we furthermore confirm that I/we have satisfied myself as to the correctness and validity of my bid: that the price(s), rate(s) and preference quoted cover all of the work/item(s) and my obligations under a resulting contract, and I accept that any mistakes regarding the price(s) and calculations will be at my risk.

4. I/we hereby accept full responsibility for the proper execution and fulfilment of all obligations and conditions devolving on me under this agreement, as the Principal(s) liable for the due fulfilment of this contract.

5. I/we agree that any action arising from this contract may in all respects be instituted against me and I/we hereby undertake to satisfy fully any sentence or judgement which may be pronounced against me as a result of such action.

6. I/we confirm that I/we have declared all and any interest that I or any persons related to my business has with regard to this bid or any related bids by completion of the Declaration of Interest Section.

SBD 6.2

DECLARATION CERTIFICATE FOR LOCAL PRODUCTION AND CONTENT FOR DESIGNATED SECTORS

This Standard Bidding Document (SBD) must form part of all bids invited. It contains general information and serves as a declaration form for local content (local production and local content are used interchangeably).

Before completing this declaration, bidders must study the General Conditions, Definitions, Directives applicable in respect of Local Content as prescribed in the Preferential Procurement Regulations, 2017, the South African Bureau of Standards (SABS) approved technical specification number SATS 1286:2011 (Edition 1) and the Guidance on the Calculation of Local Content together with the Local Content Declaration Templates [Annex C (Local Content Declaration: Summary Schedule), D (Imported Content Declaration: Supporting Schedule to Annex C) and E (Local Content Declaration: Supporting Schedule to Annex C)].

1. General Conditions

1.1. Preferential Procurement Regulations, 2017 (Regulation 8) make provision for the promotion of local production and content.

1.2. Regulation 8.(2) prescribes that in the case of designated sectors, organs of state must advertise such tenders with the specific bidding condition that only locally produced or manufactured goods, with a stipulated minimum threshold for local production and content will be considered.

1.3. Where necessary, for tenders referred to in paragraph 1.2 above, a two stage bidding process may be followed, where the first stage involves a minimum threshold for local production and content and the second stage price and B-BBEE.

1.4. A person awarded a contract in relation to a designated sector, may not sub-contract in such a manner that the local production and content of the overall value of the contract is reduced to below the stipulated minimum threshold.

1.5. The local content (LC) expressed as a percentage of the bid price must be calculated in accordance with the SABS approved technical specification number SATS 1286: 2011 as follows:

$$LC = [1 - x / y] * 100$$

Where

x is the imported content in Rand

y is the bid price in Rand excluding value added tax (VAT)

Prices referred to in the determination of x must be converted to Rand (ZAR) by using the exchange rate published by South African Reserve Bank (SARB) on the date of advertisement of the bid as indicated in paragraph 3.1 below.

The SABS approved technical specification number SATS 1286:2011 is accessible on http:/www.theDTI.gov.za/industrial development/ip.jsp at no cost.

1.6. A bid may be disqualified if this Declaration Certificate and the Annex C (Local Content Declaration: Summary Schedule) are not submitted as part of the bid documentation;

2. The stipulated minimum threshold(s) for local production and content (refer to Annex A of SATS 1286:2011) for this bid is/are as follows:

SCHOOL FURNITURE

Number	Description	% Local Content
1	School table with timber top on steel frame	100%
2	School table with seligna top on steel frame	100%
3	School table with melamine top (on chipboard) on steel frame	100%
4	Fully moulded polypropylene grade R table	100%
5	School chair with polypropylene seat on steel frame	100%
6	School chair with masonite (hardboard) seat and back on steel frame	100%

7	School chair with supawood (MDF) seat and back on steel frame	100%
8	School chair with timber seat and back on steel frame	100%
9	Fully moulded polypropylene grade R chair	100%
10	Lab stool with round polypropylene seat on steel frame	100%
11	School chair with masonite seat and back on steel frame	100%
12	School chair with plywood seat and back on steel frame	100%
13	Combination desk with timber components on steel frame	100%

3. Does any portion of the goods or services offered have any imported content?
(***Tick applicable box***)

YES		NO	

3.1 If yes, the rate(s) of exchange to be used in this bid to calculate the local content as prescribed in paragraph 1.5 of the general conditions must be the rate(s) published by SARB for the specific currency on the date of advertisement of the bid.

The relevant rates of exchange information is accessible on www.resbank.co.za

Indicate the rate(s) of exchange against the appropriate currency in the table below (refer to Annex A of SATS 1286:2011):

Currency	**Rates of exchange**
US Dollar	
Pound Sterling	
Euro	
Yen	
Other	

NB: Bidders must submit proof of the SARB rate (s) of exchange used.

4. Where, after the award of a bid, challenges are experienced in meeting the stipulated minimum threshold for local content the DTI must be informed accordingly in order for the DTI to verify and in consultation with the AO/AA provide directives in this regard.

LOCAL CONTENT DECLARATION
(REFER TO ANNEX B OF SATS 1286:2011)

LOCAL CONTENT DECLARATION BY CHIEF FINANCIAL OFFICER OR OTHER LEGALLY
RESPONSIBLE PERSON NOMINATED IN WRITING BY THE CHIEF EXECUTIVE OR SENIOR
MEMBER/PERSON WITH MANAGEMENT RESPONSIBILITY (CLOSE CORPORATION, PARTNERSHIP OR INDIVIDUAL)

IN RESPECT OF BID NO. .....

ISSUED BY: (Procurement Authority / Name of Institution):
.....
NB

1 The obligation to complete, duly sign and submit this declaration cannot be transferred to an external authorized representative, auditor or any other third party acting on behalf of the bidder.
2 Guidance on the Calculation of Local Content together with Local Content Declaration Templates (Annex C, D and E) is accessible on http://www.DTI.gov.za. Bidders should first complete Declaration D. After completing Declaration D, bidders should complete Declaration E and then consolidate the information on Declaration C. **Declaration C should be submitted with the bid documentation at the closing date and time of the bid in order to substantiate the declaration made in paragraph (c) below.** Declarations D and E should be kept by the bidders for verification purposes for a period of at least 5 years. The successful bidder is required to continuously

update Declarations C, D and E with the actual values for the duration of the contract.

I, the undersigned, ……..... (full names), do hereby declare, in my capacity as …… ……..
of .....(name of bidder entity), the following:

(a) The facts contained herein are within my own personal knowledge.

(b) I have satisfied myself that:

(i) the goods/services/works to be delivered in terms of the above-specified bid comply with the minimum local content requirements as specified in the bid, and as measured in terms of SATS 1286:2011; and

(c) The local content percentage (%) indicated below has been calculated using the formula given in clause 3 of SATS 1286:2011, the rates of exchange indicated in paragraph 3.1

above and the information contained in Declaration D and E which has been consolidated in Declaration C:

Bid price, excluding VAT (y)	R
Imported content (x), as calculated in terms of SATS 1286:2011	R
Stipulated minimum threshold for local content (paragraph 3 above)	
Local content %, as calculated in terms of SATS 1286:2011	

If the bid is for more than one product, the local content percentages for each product contained in Declaration C shall be used instead of the table above.
The local content percentages for each product has been calculated using the formula given in clause 3 of SATS 1286:2011, the rates of exchange indicated in paragraph 3.1 above and the information contained in Declaration D and E.

(d) I accept that the Procurement Authority / Institution has the right to request that the local content be verified in terms of the requirements of SATS 1286:2011.

(e) I understand that the awarding of the bid is dependent on the accuracy of the information furnished in this application. I also understand that the submission of incorrect data, or data that are not verifiable as described in SATS 1286:2011, may result in the Procurement Authority / Institution imposing any or all of the remedies as provided for in Regulation 14 of the Preferential Procurement Regulations, 2017 promulgated under the Preferential Policy Framework Act (PPPFA), 2000 (Act No. 5 of 2000).

SIGNATURE:_____ **DATE:** _____

WITNESS No. 1 _____ **DATE:** _____

WITNESS No. 2 _____ **DATE:** _____

SATS 1286.2011

Annex C

Local Content Declaration - Summary Schedule

(C1)	Tender No.					
(C2)	Tender description:					
(C3)	Designated product(s)					
(C4)	Tender Authority:					
(C5)	Tendering Entity name:					
(C6)	Tender Exchange Rate:	Pula		EU		GBP
(C7)	Specified local content %					

Note: VAT to be excluded from all calculations

		Calculation of local content						Tender summary			
Tender item no's	List of items	Tender price - each (excl VAT)	Exempted imported value	Tender value net of exempted imported content	Imported value	Local value	Local content % (per item)	Tender Qty	Total tender value	Total exempted imported content	Total Imported content
(C8)	(C9)	(C10)	(C11)	(C12)	(C13)	(C14)	(C15)	(C16)	(C17)	(C18)	(C19)

(C20) Total tender value	R 0
(C21) Total Exempt imported content	R 0
(C22) Total Tender value net of exempt imported content	R 0
(C23) Total Imported content	R 0
(C24) Total local content	R 0
(C25) Average local content % of tender	

Signature of tenderer from Annex B

Date:

SATS 1286.2011

Annex D

Imported Content Declaration - Supporting Schedule to Annex C

(D1)	Tender No.						
(D2)	Tender description:						
(D3)	Designated Products:						
(D4)	Tender Authority:						
(D5)	Tendering Entity name:						
(D6)	Tender Exchange Rate:	Pula		EU	R 9.00	GBP	R 12.00

Note: VAT to be excluded from all calculations

A. Exempted imported content

				Calculation of imported content						Summary	
Tender item no's	Description of imported content	Local supplier	Overseas Supplier	Forign currency value as per Commercial Invoice	Tender Exchange Rate	Local value of imports	Freight costs to port of entry	All locally incurred landing costs & duties	Total landed cost excl VAT	Tender Qty	Exempted imported value
(D7)	(D8)	(D9)	(D10)	(D11)	(D12)	(D13)	(D14)	(D15)	(D16)	(D17)	(D18)
									(D19) Total exempt imported value		R 0

This total must correspond with Annex C - C 21

B. Imported directly by the Tenderer

				Calculation of imported content						Summary	
Tender item no's	Description of imported content	Unit of measure	Overseas Supplier	Forign currency value as per Commercial Invoice	Tender Rate of Exchange	Local value of imports	Freight costs to port of entry	All locally incurred landing costs & duties	Total landed cost excl VAT	Tender Qty	Total imported value
(D20)	(D21)	(D22)	(D23)	(D24)	(D25)	(D26)	(D27)	(D28)	(D29)	(D30)	(D31)
	`										
									(D32) Total imported value by tenderer		R 0

SATS 1286.2011

Annex D - Continued

Imported Content Declaration - Supporting Schedule to Annex C

C. Imported by a 3rd party and supplied to the Tenderer

				Calculation of imported content						Summary	
Description of imported content	Unit of measure	Local supplier	Overseas Supplier	Forign currency value as per Commercial Invoice	Tender Rate of Exchange	Local value of imports	Freight costs to port of entry	All locally incurred landing costs & duties	Total landed cost excl VAT	Quantity imported	Total imported value
(D33)	*(D34)*	*(D35)*	*(D36)*	*(D37)*	*(D38)*	*(D39)*	*(D40)*	*(D41)*	*(D42)*	*(D43)*	*(D44)*
`											
									***(D45)* Total imported value by 3rd party**		R 0

D. Other foreign currency payments

			Calculation of foreign currency payments		Summary of payments
Type of payment	Local supplier making the payment	Overseas beneficiary	Foreign currency value paid	Tender Rate of Exchange	Local value of payments
(D46)	*(D47)*	*(D48)*	*(D49)*	*(D50)*	*(D51)*
				***(D52)* Total of foreign currency payments declared by tenderer and/or 3rd party**	

Signature of tenderer from Annex B

***(D53)* Total of imported content & foreign currency payments - *(D32), (D45) & (D52)* above** #REF!

This total must correspond with Annex C - C 23

Date:

Annex E

Local Content Declaration - Supporting Schedule to Annex C

(E1)	**Tender No.**	
(E2)	**Tender description:**	
(E3)	**Designated products:**	
(E4)	**Tender Authority:**	
(E5)	**Tendering Entity name:**	

Note: VAT to be excluded from all calculations

Local Products (Goods, Services and Works)	Description of items purchased	Local suppliers	Value
	(E6)	*(E7)*	*(E8)*
	***(E9)* Total local products (Goods, Services and Works)**		R 0

(E10)	**Manpower costs**	(Tenderer's manpower cost)	R 0
(E11)	**Factory overheads**	(Rental, depreciation & amortisation, utility costs, consumables etc.)	R 0
(E12)	**Administration overheads and mark-up**	(Marketing, insurance, financing, interest etc.)	R 0

***(E13)* Total local content** R 0

This total must correspond with Annex C - C24

Signature of tenderer from Annex B

Date: