DC Schematic

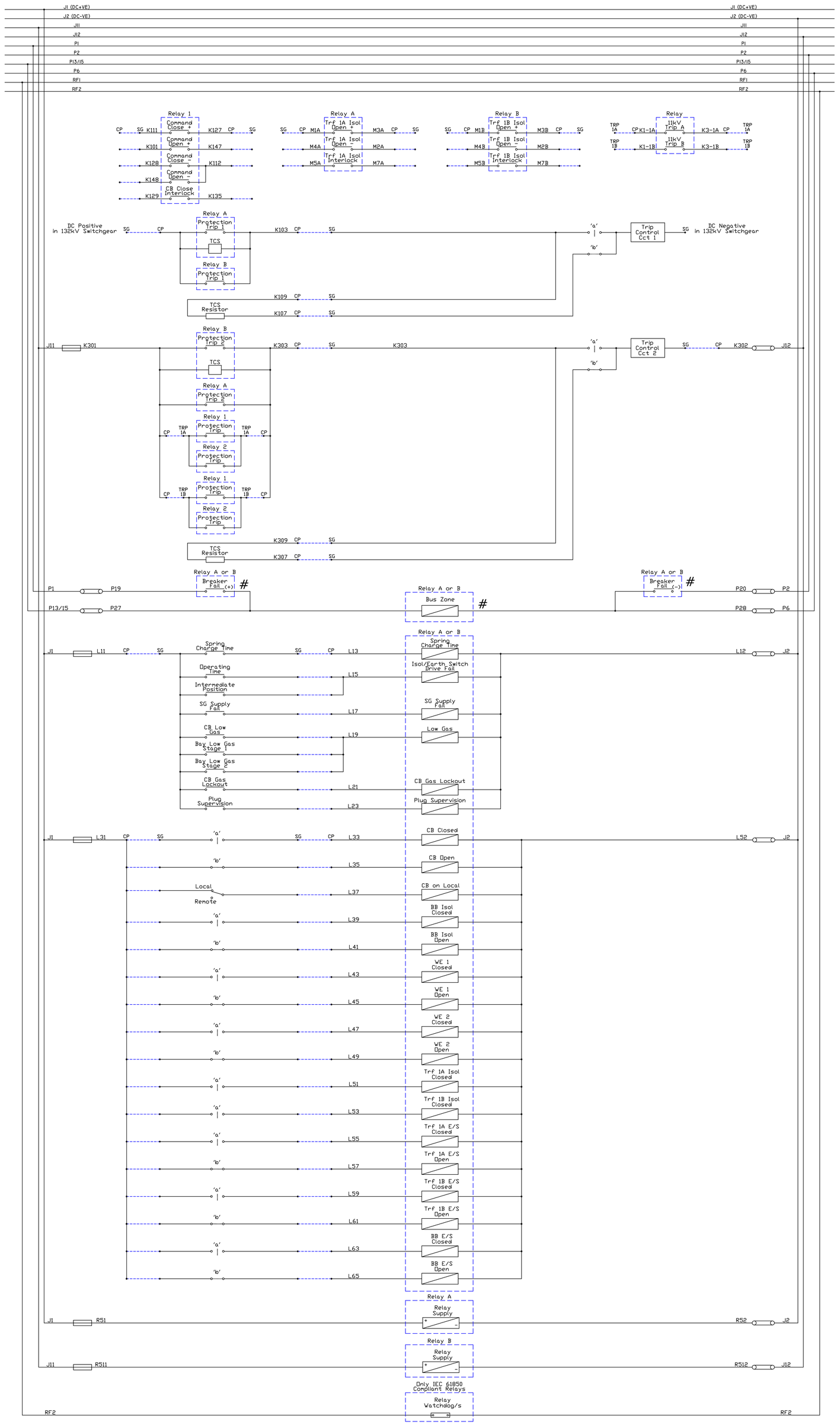

AC Schematic

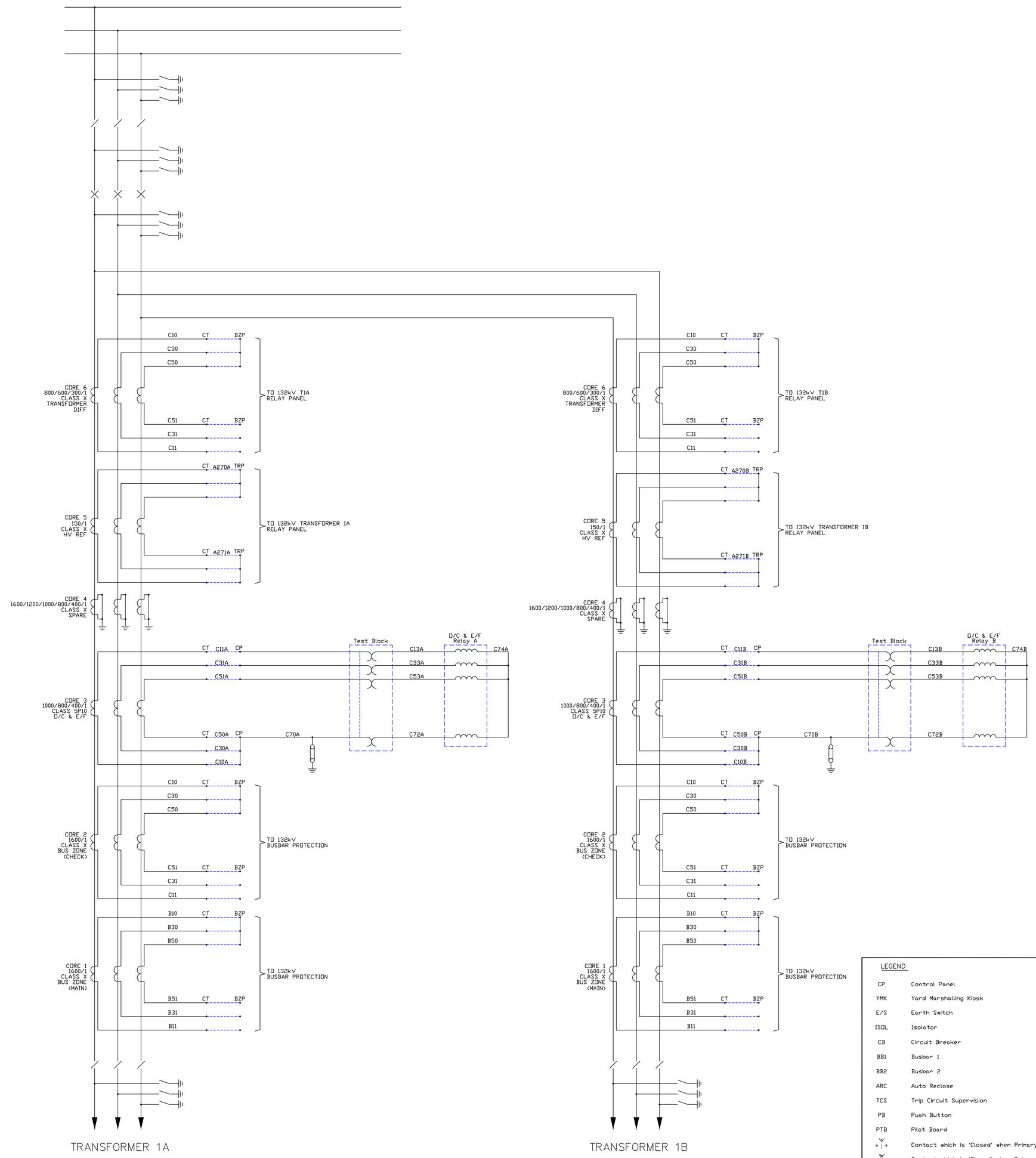

TRANSFORMER 1A

TRANSFORMER 1B

LEGEND

CP	Control Panel
YMK	Yard Marshalling Kiosk
E/S	Earth Switch
ISOL	Isolator
CB	Circuit Breaker
BB1	Busbar 1
BB2	Busbar 2
ARC	Auto Reclose
TCS	Trip Circuit Supervision
PB	Push Button
PTB	Pilot Board
'a'	Contact which is 'Closed' when Primary Equipment is 'Closed'
'b'	Contact which is 'Closed' when Primary Equipment is 'Open'
	Fuse
	Link
	Control Switch
	Push Button
	Relay Digital Input
	Relay Analog Input
	Normally Open Contact
	Normally Closed Contact
	Current Transformer

NOTES:

1. The purpose of this drawing is to clarify the requirements of the associated contract/enquiry specification. The issue of this with the specification does not absolve the successful contractor from his normal responsibility to provide a satisfactory scheme nor to submit drawings of systems proposed for approval by the engineer.

2. All relays have been shown de-energised with switches open.

3. This drawing will enable the different contractors to co-ordinate their respective systems with associated equipment. For this reason ferrule numbers of interconnecting points must be strictly adhered to. Where absolutely necessary ferrule numbers of connectors not associated with equipment on other contract may be added or altered.

4. Test blocks have been shown schematically. The actual wiring must be from the left, 'RED' 'WHITE' and 'BLUE' as viewed from the front of the test block.

5. Circuitry marked * is only required if differential relay make & model has been specified to match remote end and is not IEC 61850 compliant.

6. Contacts and inputs marked # must all be contained in the same relay.

DRAWN	A.J.R.W.				
DATE	25.03.2009		1	CT DATA UPDATED	ML 22/09/2014
CHIEF DRAUGHTSPERSON		REFERENCE DRAWINGS:		REVISIONS:	BY: DATE:
PLANNING OFFICER					
PROTECTION ENGINEER					
PLANNING ENGINEER					
PROJECTS ENGINEER					
PLAN/PROJ. MANAGER					
APPROVED A.J. BILS DEPUTY HEAD H.V. OPERATIONS					

ETHEKWINI ELECTRICITY

PROPOSED 132/11kV SUBSTATION WITH 132kV GIS

AC & DC SCHEMATIC FOR 132kV TRANSFORMER FEEDER

SCALE: NTS | DRAWING NUMBER: TD 65 | REV: 1