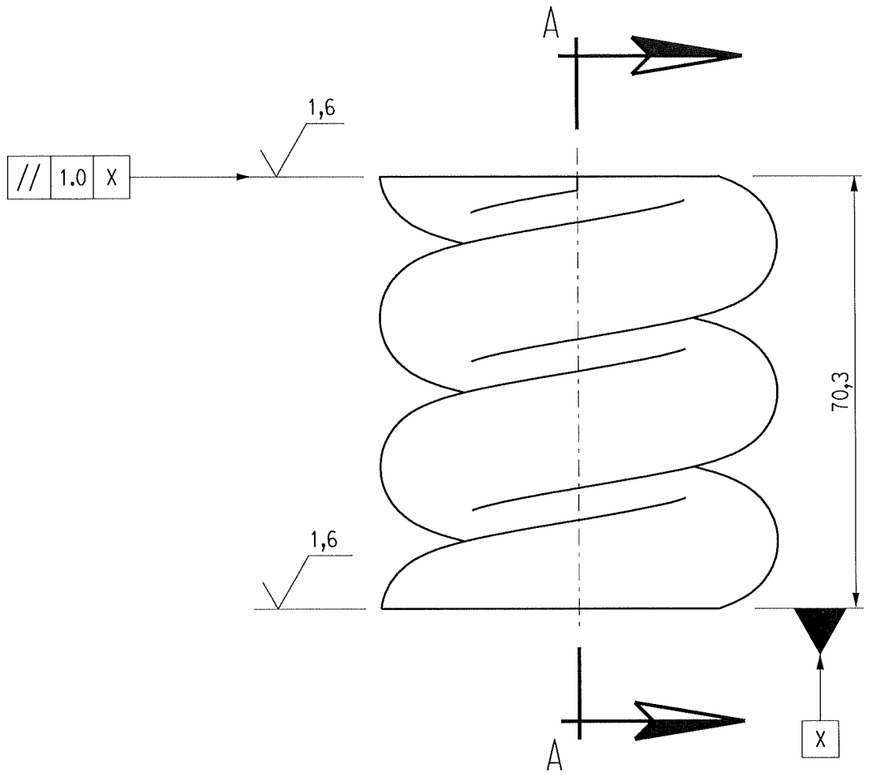

FRONT VIEW

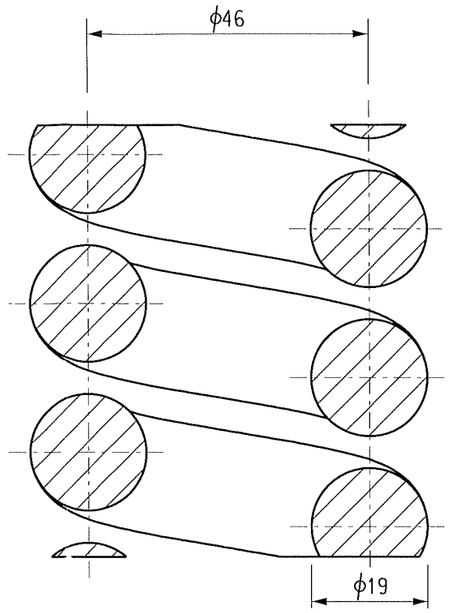

SECTION A-A

LEGEND	
SPRING FREE LENGTH, LO	70,3mm
WIRE DIAMETER, D	ϕ19
MEAN COIL DIAMETER, D	ϕ46
NUMBER OF END COILS, NE	2
NUMBER OF ACTIVE COILS, NA	1,5
TOTAL NUMBER OF COILS, NT	3,5
SPRING RATE, K	800±40Kg/mm
FINISHING	SQUARED AND GROUND
PITCH (P)	34.9mm
OUTSIDE DIAMETER	65mm ±1mm

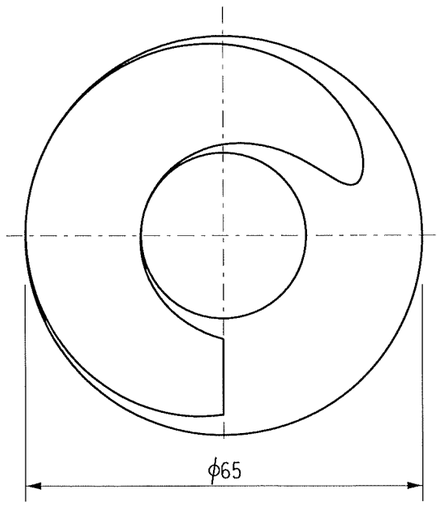

TOP VIEW

CONTROLLED COPY

D.O.	REV	DATE	** REVISION **	REV BY	CHKD BY	AUTH BY	APP BY	KKS APP	REFERENCE DRAWINGS	
18	2a	2023-05-30	DATUM AND REFERENCE POINTS ADDED AS PER REQUEST AS PER NOTIF 26434971	S DK					6335 Sht 5	THRUST BEARING SPRING ASSEMBLY
18	1	2014-02-11	DETAILS OF SPRING RATE IN LEGEND ALTERED AS PER NOTIF 22640916	J T	S dK	I M	T K		6335 Sht 4	THRUST BEARING SPRING BOLT DETAILS
18	0		FIRST ISSUE, NEW DRAWING CREATED AS PER NOTIF No 21926937, WO No 709520825						6335 Sht 3	TB SPRING BOTTOM FLANGE SECTIONS & DETAILS
									6335 Sht 2	THRUST BEARING SPRING TOP FLANGE SECTIONS & DETAILS
									48/	

AUTHORISED FOR ESKOM BY: L. MOSTERT 2013-09-05

CODIFICATION BY:

APPROVED BY: T. KEYSER 2013-10-14

CHECKED BY: S.dk 2013-07-03

CREATED BY: N.L.P 2013-07-01

SCALE 1:1

CLASSIFICATION

PBS PATH 1-4 OMLD

Eskom
ESKOM HOLDINGS SOC Ltd
REG No 2002/015527/30

DRAKENSBERG PUMPED STORAGE SCHEME

SECTIONS & DETAILS
UNIT 1-4
BEARINGS
THRUST BEARING SPRING

ESKOM DRAWING No 18.48/6335 | SHT 1 | REV 2a

1st ANGLE

PRELIMINARY

THIS DRAWING HAS BEEN CREATED ON A MICROSTATION C.A.D SYSTEM ANY AMENDMENT MUST BE EFFECTED ON THE SAME C.A.D. SYSTEM.

DRAWING CLASSIFICATION: Controlled Disclosure

SIZE GROOTTE A3L