Transnet Freight Rail

an Operating Division of **TRANSNET SOC LTD**

[hereinafter referred to as **Transnet]**

[Registration No. 1990/000900/30]

REQUEST FOR PROPOSAL [RFP] [GOODS]

FOR THE PROVISION OF ALUMINOTHERMIC WELDING OF RAILWAY RAILS ON 'AN AS AND WHEN' REQUIRED BASIS FOR A PERIOD OF 6 MONTHS.

RFP NUMBER	**HOAC-HO-0047619**
ISSUE DATE:	**21 August 2024**
CLOSING DATE:	**06 September 2024**
CLOSING TIME:	**14:00 PM**
BID VALIDITY PERIOD:	**180 Business Days from Closing Date (05 May 2025)**

Note to the bidders:

Bidders are required to ensure that electronic bid submissions are done at least a day before the closing date to prevent issues which they may encounter due to their internet speed, bandwidth or the size of the number of uploads they are submitting. Transnet will not be held liable for any challenges experienced by bidders as a result of the technical challenges. Please do not wait for the last hour to submit. A Bidder can upload 30mb per upload and multiple uploads are permitted.

SCHEDULE OF BID DOCUMENTS

Section No **Page**

SECTION 1: SBD1 FORM 3
SECTION 2 : NOTICE TO BIDDERS 5
1 INVITATION TO BID 5
2 FORMAL BRIEFING 6
3 PROPOSAL SUBMISSION 6
4 RFP INSTRUCTIONS 6
5 JOINT VENTURES OR CONSORTIUMS 7
6 COMMUNICATION 7
7 CONFIDENTIALITY 7
8 COMPLIANCE 8
9 EMPLOYMENT EQUITY ACT 8
10 DISCLAIMERS 8
11 LEGAL REVIEW 9
12 SECURITY CLEARANCE 9
13 NATIONAL TREASURY'S CENTRAL SUPPLIER DATABASE 9
14 TAX COMPLIANCE 9
SECTION 3: BACKGROUND, OVERVIEW AND SCOPE OF REQUIREMENTS 11
SECTION 4: PRICING AND DELIVERY SCHEDULE 19
SECTION 5: PROPOSAL FORM AND LIST OF RETURNABLE DOCUMENTS 24
SECTION 6: CERTIFICATE OF ACQUAINTANCE WITH RFP, MASTER AGREEMENT & APPLICABLE DOCUMENTS 29
SECTION 7: RFP DECLARATION AND BREACH OF LAW FORM 30
SECTION 8: RFP CLARIFICATION REQUEST FORM 35
SECTION 9 : SPECIFIC GOALS POINTS CLAIM FORM 36
SECTION 10: PROTECTION OF PERSONAL INFORMATION (FOR NORMAL CONTRACT .....

RFP ANNEXURES:

ANNEXURE A: QP ALUMINOTHERMIC RAIL WELDING PROCESS

ANNEXURE B: BBB 0481 VER2 MANUAL FOR TRACK MAINTENANCE

ANNEXURE C: BBB 8341 VER5 TRACK WELDING MANUAL

ANNEXURE D: BBF 0595 VER2 MANUAL FOR WSWP-Welding

ANNEXURE E: MASTER AGREEMENT

ANNEXURE F: SCHEDULE OF REQUIREMENTS

ANNEXURE G: TRANSNET'S GENERAL BID CONDITIONS

ANNEXURE H: TRANSNET'S SUPPLIER INTEGRITY PACT

ANNEXURE I: NON-DISCLOSURE AGREEMENT

ANNEXURE J: TRANSNET HEALTH AND SAFETY COMPLIANCE SPECIFICATIONS FOR CONTRACTORS

ANNEXURE K: ASSESSMENT SCHEDULE - HEALTH AND SAFETY REQUIREMENTS

ANNEXURE L: HEALTH AND SAFETY QUESTIONNAIRE

ANNEXURE M: HEALTH AND SAFETY COST BREAKDOWN

ANNEXURE N: MANDATORY AGREEMENT

ANNEXURE O: BBD8210_VER_1 E7.1

FOR THE PROVISION OF ALUMINOTHERMIC WELDING OF RAILWAY RAILS ON 'AN AS AND WHEN' REQUIRED BASIS FOR A PERIOD OF 6 MONTHS.

SECTION 1: SBD1 FORM

PART A

INVITATION TO BID

YOU ARE HEREBY INVITED TO BID FOR REQUIREMENTS OF TRANSNET FREIGHT RAIL A DIVISION TRANSNET SOC LTD							
BID NUMBER:	**HOAC-HO-0047619**	ISSUE DATE:	**21 August 2024**	CLOSING DATE:	**06 September 2024**	CLOSING TIME:	**14:pm**
DESCRIPTION	**FOR THE PROVISION OF ALUMINOTHERMIC WELDING OF RAILWAY RAILS ON 'AN AS AND WHEN' REQUIRED BASIS FOR A PERIOD OF 6 MONTHS.**						

BID RESPONSE DOCUMENTS SUBMISSION
RESPONDENTS ARE TO UPLOAD THEIR BID RESPONSE PROPOSALS ONTO THE TRANSNET SYSTEM AGAINST EACH TENDER SELECTED (*please refer to section 2, paragraph 3 for a detailed process on how to upload submissions*): https://transnetetenders.azurewebsites.net

BIDDING PROCEDURE ENQUIRIES MAY BE DIRECTED TO		**TECHNICAL ENQUIRIES MAY BE DIRECTED TO:**	
CONTACT PERSON	Delisiwe Mngomezulu	CONTACT PERSON	Delisiwe Mngomezulu
TELEPHONE NUMBER	011-584-1129	TELEPHONE NUMBER	011-584-1129
FACSIMILE NUMBER	N/A	FACSIMILE NUMBER	N/A
E-MAIL ADDRESS	Delisiwe.Mngomezulu@transnet.net	E-MAIL ADDRESS	Delisiwe.Mngomezulu@transnet.net

SUPPLIER INFORMATION					
NAME OF BIDDER					
POSTAL ADDRESS					
STREET ADDRESS					
TELEPHONE NUMBER	CODE		NUMBER		
CELLPHONE NUMBER					
FACSIMILE NUMBER	CODE		NUMBER		
E-MAIL ADDRESS					
VAT REGISTRATION NUMBER					
SUPPLIER COMPLIANCE STATUS	TAX COMPLIANCE SYSTEM PIN:		**OR**	CENTRAL SUPPLIER DATABASE	UNIQUE REGISTRATION REFERENCE NUMBER: MAAA
B-BBEE STATUS LEVEL VERIFICATION CERTIFICATE	TICK APPLICABLE BOX] ☐ Yes ☐ No		B-BBEE STATUS LEVEL SWORN AFFIDAVIT		[TICK APPLICABLE BOX] ☐ Yes ☐ No

[A B-BBEE STATUS LEVEL VERIFICATION CERTIFICATE/ SWORN AFFIDAVIT (FOR EMES & QSEs) MUST BE SUBMITTED FOR PURPOSES OF COMPLIANCE WITH THE B-BBEE ACT]			
1 ARE YOU THE ACCREDITED REPRESENTATIVE IN SOUTH AFRICA FOR THE GOODS /SERVICES /WORKS OFFERED?	☐Yes ☐No [IF YES ENCLOSE PROOF]	**2** ARE YOU A FOREIGN BASED SUPPLIER FOR **THE GOODS /SERVICES /WORKS OFFERED?**	☐Yes ☐No [IF YES, ANSWER QUESTIONAIRE BELOW]

QUESTIONNAIRE TO BIDDING FOREIGN SUPPLIERS

IS THE ENTITY A RESIDENT OF THE REPUBLIC OF SOUTH AFRICA (RSA)?	☐ YES ☐ NO
DOES THE ENTITY HAVE A BRANCH IN THE RSA?	☐ YES ☐ NO
DOES THE ENTITY HAVE A PERMANENT ESTABLISHMENT IN THE RSA?	☐ YES ☐ NO
DOES THE ENTITY HAVE ANY SOURCE OF INCOME IN THE RSA?	☐ YES ☐ NO
IS THE ENTITY LIABLE IN THE RSA FOR ANY FORM OF TAXATION?	☐ YES ☐ NO

IF THE ANSWER IS "NO" TO ALL OF THE ABOVE, THEN IT IS NOT A REQUIREMENT TO REGISTER FOR A TAX COMPLIANCE STATUS SYSTEM PIN CODE FROM THE SOUTH AFRICAN REVENUE SERVICE (SARS) AND IF NOT REGISTER AS PER 1.3 BELOW.

PART B
TERMS AND CONDITIONS FOR BIDDING

1.	**TAX COMPLIANCE REQUIREMENTS**
1.1	BIDDERS MUST ENSURE COMPLIANCE WITH THEIR TAX OBLIGATIONS.
1.2	BIDDERS ARE REQUIRED TO SUBMIT THEIR UNIQUE PERSONAL IDENTIFICATION NUMBER (PIN) ISSUED BY SARS TO ENABLE THE ORGAN OF STATE TO VERIFY THE TAXPAYER'S PROFILE AND TAX STATUS.
1.3	APPLICATION FOR TAX COMPLIANCE STATUS (TCS) PIN MAY BE MADE VIA E-FILING THROUGH THE SARS WEBSITE WWW.SARS.GOV.ZA.
1.4	BIDDERS MAY ALSO SUBMIT A PRINTED TCS CERTIFICATE TOGETHER WITH THE BID.
1.5	IN BIDS WHERE UNINCORPORATED CONSORTIA / JOINT VENTURES / SUB-CONTRACTORS ARE INVOLVED, EACH PARTY MUST SUBMIT A SEPARATE TCS CERTIFICATE / PIN / CSD NUMBER.
1.6	WHERE NO TCS IS AVAILABLE BUT THE BIDDER IS REGISTERED ON THE CENTRAL SUPPLIER DATABASE (CSD), A CSD NUMBER MUST BE PROVIDED.

NB: FAILURE TO PROVIDE / OR COMPLY WITH ANY OF THE ABOVE PARTICULARS MAY RENDER THE BID INVALID.

SIGNATURE OF BIDDER: ……

CAPACITY UNDER WHICH THIS BID IS SIGNED: ……

(Proof of authority must be submitted e.g. company resolution)

DATE:_____

SECTION 2 : NOTICE TO BIDDERS

1 INVITATION TO BID

Responses to this RFP [hereinafter referred to as a **Bid** or a **Proposal**] are requested from persons, companies, close corporations or enterprises [hereinafter referred to as an **entity**, **Respondent** or **Bidder**].

DESCRIPTION	**FOR THE PROVISION OF ALUMINOTHERMIC WELDING OF RAILWAY RAILS ON 'AN AS AND WHEN' REQUIRED BASIS FOR A PERIOD OF 6 MONTHS.**
TENDER ADVERT	All Transnet tenders are advertised on the National Treasury's e-Tender Publication Portal and the Transnet website. Should one of these media (i.e. National Treasury's e-Tender Publication Portal or Transnet website) not be available, bidders are advised to check on the other media for advertised tenders.
RFP DOWNLOADING	This RFP may be downloaded directly from National Treasury's e-Tender Publication Portal at www.etenders.gov.za free of charge. To download RFP and Annexures: • Click on "Tender Opportunities"; • Select "Advertised Tenders"; • In the "Department" box, select Transnet SOC Ltd. Once the tender has been in the list, click on the 'Tender documents" tab and process to download all uploaded documents. The RFP may also be downloaded from the Transnet Portal at https://transnetetenders.azurewebsites.net (please use **Google Chrome** to access Transnet link/site) free of charge *(refer to section 2, paragraph 3 below for detailed steps)*
COMMUNICATION	Transnet will publish the outcome of this RFP on the National Treasury e-tender portal and Transnet website with 10 days after the award has been finalised. All unsuccessful bidders have a right to request for reasons for their bid not being successful. This requested must be directed to the contact person stated in the SBD 1 form Any addenda to the RFP or clarifications will be published on the e-tender portal and Transnet website. Bidders are required to check the e-tender portal or Transnet website prior to finalising their bid submissions for any changes or clarifications to the RFP. Transnet will not be held liable if Bidders do not receive the latest information regarding this RFP with the possible consequence of either being disadvantaged or disqualified as a result thereof.
BRIEFING SESSION	Not Applicable
CLOSING DATE	**14:00 pm on Friday 06 September 2024** Bidders must ensure that bids are uploaded timeously onto the system. Generally, if a bid is late, it will not be accepted for consideration. ***Bidders are required to ensure that electronic bid submissions are done at least a day before the closing date to prevent issues which they may encounter due to their internet speed, bandwidth or the size of the number of uploads they are submitting. Transnet will not be held liable for any challenges experienced by bidders as a result of the technical challenges. Please do not wait for the last hour to submit. A Bidder can upload 30mb per upload and multiple uploads are permitted.***
VALIDITY PERIOD	**(05 May 2025) 180 Business Days from Closing Date** Bidders are to note that they may be requested to extend the validity period of their bid, at the same terms and conditions, if the internal evaluation process

	has not been finalised within the validity period. However, once the adjudication body has approved the process and award of the business to the successful bidder(s), the validity of the successful bidder(s)' bid will be deemed to remain valid until a final contract has been concluded. Should a bidder fail to respond to a request for extension of the validity period before it expires, that bidder will be excluded from tender process. With regard to the validity period of next highest ranked bidders, please refer to Section 2, paragraph 10.12

Any additional information or clarification will be published on the e-Tender portal and Transnet website, if necessary.

2 FORMAL BRIEFING

A formal briefing session will not be held but should Respondents have specific queries they should email these to the Transnet employee(s) indicated in paragraph 6 *[Communication]* below:

3 PROPOSAL SUBMISSION

Transnet has implemented a new electronic tender submission system, the e-Tender Submission Portal, in line with the overall Transnet digitalization strategy where suppliers can view advertised tenders, register their information, log their intent to respond to bids and upload their bid proposals/responses on to the system.

a) The Transnet e-Tender Submission Portal can be accessed as follows:
- Log on to the Transnet eTenders management platform website/ Portal ((transnetetenders.azurewebsites.net) Please use **Google Chrome** to access Transnet link/site);
- Click on "ADVERTISED TENDERS" to view advertised tenders;
- Click on "SIGN IN/REGISTER – for bidder to register their information (must fill in all mandatory information);
- Click on "SIGN IN/REGISTER" - to sign in if already registered;
- Toggle (click to switch) the "Log an Intent" button to submit a bid;
- Submit bid documents by uploading them into the system against each tender selected.
- No late submissions will be accepted. The bidder guide can be found on the Transnet Portal transnetetenders.azurewebsites.net

4 RFP INSTRUCTIONS

4.1 Please sign documents [sign, stamp and date the bottom of each page] before uploading them on the system. The person or persons signing the submission must be legally authorised by the respondent to do so.

4.2 **All returnable documents tabled in the Proposal Form [Section 5] must be returned with proposals.**

4.3 Unless otherwise expressly stated, all Proposals furnished pursuant to this RFP shall be deemed to be offers. Any exceptions to this statement must be clearly and specifically indicated.

4.4 Any additional conditions must be embodied in an accompanying letter. Subject only to clause 15 [Alterations made by the Respondent to Bid Prices] of the General Bid Conditions, paragraph 12 below (Legal Review) and Section 6 of the RFP, alterations, additions or deletions must not be made by the Respondent to the actual RFP documents.

5 JOINT VENTURES OR CONSORTIUMS

Respondents who would wish to respond to this RFP as a Joint Venture [**JV**] or consortium with B-BBEE entities, must state their intention to do so in their RFP submission. Such Respondents must also submit a signed JV or consortium agreement between the parties clearly stating the percentage [%] split of business and the associated responsibilities of each party. If at the time of the bid submission such a JV or consortium agreement has not been concluded, the partners must submit confirmation in writing of their intention to enter into a JV or consortium agreement should they be awarded business by Transnet through this RFP process. This written confirmation must clearly indicate the percentage [%] split of business and the responsibilities of each party. In such cases, award of business will only take place once a signed copy of a JV or consortium agreement is submitted to Transnet.

- Respondents are to note that for the purpose of Evaluation, a JV will be evaluated based on one consolidated B-BBEE score card (a consolidated B-BBEE Status Level verification certificate) Preference points will be awarded to a bidder for attaining the specific goals requirements in accordance with the table indicated in Table 3.2 of the specific goals Claim Form.

6 COMMUNICATION

6.1 For specific queries relating to this RFP, an RFP Clarification Request Form should be submitted onto the system and to [**Delisiwe.Mngomezulu@transnet.net]**] before **12:00 pm on 28 August 2024**, substantially in the form set out in Section 8 hereto. In the interest of fairness and transparency, Transnet's response to such a query will be published on the e-tender portal and Transnet website.

6.2 After the closing date of the RFP, a Respondent may only communicate with the DBAC Secretariat **[Prudence Nkabinde]**, at telephone number **011-584-0821**, email **Prudence.Nkabinde@transnet.net** on any matter relating to its RFP Proposal.

6.3 Respondents are to note that changes to its submission will not be considered after the closing date.

6.4 It is prohibited for Respondents to attempt, either directly or indirectly, to canvass any officer or employee of Transnet in respect of this RFP between the closing date and the date of the award of the business.

6.5 Respondents found to be in collusion with one another will be automatically disqualified and restricted from doing business with organs of state for a specified period.

6.6 Transnet will publish the outcome of this RFP in the National Treasury e-tender portal and Transnet website with 10 days after the award has been finalised. Respondents are required to check the National Treasury e-tender Portal and Transnet website for the results of the tender process. All unsuccessful bidders have a right to request Transnet to furnish individual reasons for their bid not being successful. This requested must be directed to the contact person stated in the SBD 1 form

7 CONFIDENTIALITY

All information related to this RFP is to be treated with strict confidence. In this regard Respondents are required to certify that they have acquainted themselves with the Non-Disclosure Agreement. All information related to a subsequent contract, both during and after completion thereof, will be treated with strict confidence. Should the need however arise to divulge any information related to this RFP or the subsequent contract, written approval must be obtained from Transnet.

8 COMPLIANCE

The successful Respondent [hereinafter referred to as the **Supplier** shall be in full and complete compliance with any and all applicable laws and regulations.

9 EMPLOYMENT EQUITY ACT

Respondents must comply with the requirements of the Employment Equity Act 55 of 1998 applicable to it including (but not limited to) Section 53 of the Employment Equity Act.

10 DISCLAIMERS

Respondents are hereby advised that Transnet is not committed to any course of action as a result of its issuance of this RFP and/or its receipt of Proposals. In particular, please note that Transnet reserves the right to:

10.1 modify the RFP's Goods/Services and request Respondents to re-bid on any such changes;

10.2 reject any Proposal which does not conform to instructions and specifications which are detailed herein;

10.3 disqualify Proposals submitted after the stated submission deadline [closing date];

10.4 award a contract in connection with this Proposal at any time after the RFP's closing date;

10.5 award a contract for only a portion of the proposed Goods/Services which are reflected in the scope of this RFP;

10.6 split the award of the contract between more than one Supplier/Service provider, should it at Transnet's discretion be more advantageous in terms of, amongst others, cost or developmental considerations;

10.7 cancel the bid process;

10.8 validate any information submitted by Respondents in response to this bid. This would include, but is not limited to, requesting the Respondents to provide supporting evidence. By submitting a bid, Respondents hereby irrevocably grant the necessary consent to Transnet to do so;

10.9 request audited financial statements or other documentation for the purposes of a due diligence exercise;

10.10 not accept any changes or purported changes by the Respondent to the bid rates after the closing date and/or after the award of the business, unless the contract specifically provided for it;

10.11 to cancel the contract and/request that National Treasury place the Respondent on its Database of Restricted Suppliers for a period not exceeding 10 years, on the basis that a contract was awarded on the strength of incorrect information furnished by the Respondent or on any other basis recognised in law;

10.12 to award the business to the next ranked bidder, provided that he/she is still prepared to provide the required Goods at the quoted price, should the preferred bidder fail to sign or commence with the contract within a reasonable period after being requested to do so. Under such circumstances, the validity of the bids of the next ranked bidder(s) will be deemed to remain valid, irrespective of whether the outcome of the tender has been published the outcome of the bid process on the National Treasury e-tender Portal and Transnet website. Bidders may therefore be requested to advise whether they would still be prepared to provide the required Goods at their quoted price.

Note that Transnet will not reimburse any Respondent for any preparatory costs or other work performed in connection with its Proposal, whether or not the Respondent is awarded a contract.

11 LEGAL REVIEW

A Proposal submitted by a Respondent will be subjected to review and acceptance or rejection of its proposed contractual terms and conditions by Transnet's Legal Counsel, prior to consideration for an award of business. A material deviation from the Standard terms or conditions could result in disqualification.

12 SECURITY CLEARANCE

Acceptance of this bid could be subject to the condition that the Successful Respondent, its personnel providing the Goods/Services and its subcontractor(s) must obtain security clearance from the appropriate authorities to the level of **CONFIDENTIAL/ SECRET/TOP SECRET**. Obtaining the required clearance is the responsibility of the Successful Respondent. Acceptance of the bid is also subject to the condition that the Successful Respondent will implement all such security measures as the safe performance of the contract may require.

13 NATIONAL TREASURY'S CENTRAL SUPPLIER DATABASE

Respondents are required to self-register on National Treasury's Central Supplier Database (CSD) which has been established to centrally administer supplier information for all organs of state and facilitate the verification of certain key supplier information. Respondents must register on the CSD prior to submitting their bids. Business may not be awarded to a Respondent who has failed to register on the CSD. Only foreign suppliers with no local registered entity need not register on the CSD.

14 TAX COMPLIANCE

Respondents must be compliant when submitting a proposal to Transnet and remain compliant for the entire contract term with all applicable tax legislation, including but not limited to the Income Tax Act, 1962 (Act No. 58 of 1962) and Value Added Tax Act, 1991 (Act No. 89 of 1991).

It is a condition of this bid that the tax matters of the successful Respondents be in order, or that satisfactory arrangements have been made with South African Revenue Service (SARS) to meet the Respondents tax obligations.

The Tax Compliance status requirements are also applicable to foreign Respondents/ individuals who wish to submit bids.

Where Consortia / Joint Ventures / Sub-contractors are involved, each party must be registered on the Central Supplier Database and their tax compliance status will be verified through the Central Supplier Database.

Transnet urges its clients, suppliers and the general public to report any fraud or corruption to TIP-OFFS ANONYMOUS:

Ethics Helpdesk (Pty) LTD.
Ethics Management System ™

You can choose to be Anonymous or Non-Anonymous on ANY of the platforms
PLEASE RETAIN YOUR REFERENCE NUMBER

AI Voice BoT "Jack"
Speak to our AI Voice Chat Bot "JACK", you converse with him like chatting to a human, with the option to record a message and speak to an agent at anytime.

What's App
Speak to an Agent via What's App.

Speak to an Agent
Speak to an Agent via the platform with no call or data charge

Telegram
Speak to an Agent via Telegram

0800 003 056

086 551 4153

reportit@ethicshelpdesk.com

*120*0785980808#

SECTION 3: BACKGROUND, OVERVIEW AND SCOPE OF REQUIREMENTS

1 BACKGROUND

Aluminothermic welding, also known as thermite welding, is a widely used process in the rail industry for joining rails. Developed in the late 19th century, this technique leverages the exothermic reaction between aluminium powder and iron oxide to produce molten steel. This molten steel, upon cooling, forms a strong, durable bond between the rail ends. The process is highly valued for its ability to create continuous welded rails (CWR). Aluminothermic welding is especially beneficial for its portability, allowing repairs and new welds to be performed in the field with relatively simple equipment. Its application is crucial for maintaining the integrity and safety of railway infrastructure, supporting the smooth and efficient operation on the network.

2 EXECUTIVE OVERVIEW

Whereas Transnet is seeking a partner(s) to provide solutions for its Railway Infrastructure maintenance nationally, it also seeks to improve its current processes for providing these Goods to its end user community throughout its locations

The selected Supplier(s) must share in the mission and business objectives of Transnet. These mutual goals will be met by meeting contractual requirements and new challenges in an environment of teamwork, joint participation, flexibility, innovation and open communications. In this spirit of partnership, Transnet and its Supplier(s) will study the current ways they do business to enhance current practices and support processes and systems. Such a partnership will allow Transnet to reach higher levels of quality, service and profitability.

Specifically, Transnet seeks to benefit from this partnership in the following ways:

2.1 Transnet must receive reduced cost of acquisition and improved service benefits resulting from the Supplier/Service provider's economies of scale and streamlined service processes.

2.2 Transnet must achieve appropriate availability that meets user needs while reducing costs for both Transnet and the chosen Supplier/Service provider(s).

2.3 Transnet must receive proactive improvements from the Supplier/Service provider with respect to supply/provision of Goods/Services and related processes.

2.4 Transnet's overall competitive advantage must be strengthened by the chosen Supplier/Service provider's leading edge technology and service delivery systems.

2.5 Transnet end users must be able to rely on the chosen Supplier/Service provider's personnel for service enquiries, recommendations and substitutions.

2.6 Transnet must reduce costs by streamlining its acquisition of Goods/Services, including managed service processes on a Group basis.

3 SCOPE OF REQUIREMENTS

3.1 The primary objective is to remove defective welds and insert closures, casting new welds in accordance with Chapter 11 in the Transnet Track Welding Manual (BBB8341), Manual for Track Maintenance (BBB0481), Written Safe Work Procedure (SMS/WP/P/021) and Transnet QP Aluminothermic Rail Welding Process (FRSMPMEC38). The removal of defects and casting of welds will be executed across the ore corridor which spans 861 km distance from Sishen to Saldanha.

3.2 The scope includes the following key elements:

a) **Welding Services**: The contractor shall provide skilled labour and all necessary equipment to perform aluminothermic welding (SKV and QP process). This includes the removal of defective welds and the insertion of rail closures, followed by the casting of new welds.

b) **Compliance**: All welding activities must comply with the specifications and procedures outlined in with Chapter 11 in the Transnet Track Welding Manual (BBB8341), Manual for Track Maintenance (BBB0481), Written Safe Work Procedure (SMS/WP/P/021) and Transnet QP Aluminothermic Rail Welding Process (FRSMPMEC38). Welds that do not pass the x-ray and is classified as cut outs should be removed at the supplier's expense.

c) **Equipment**: The contractor shall supply all equipment required for the welding process, including grinders, mould shoes, preheaters, shearing machines, power packs, straight edges, cutting machines and any other equipment and tools necessary to complete track related work. Transnet will provide the thermite kits.

d) **Quality Control**: The contractor must implement a robust quality control process to ensure the integrity and durability of all welds. This includes pre-weld inspections, post-weld inspections, and any non-destructive testing (NDT) as specified in the Track Welding Manual. Welds needs to be classified according to the BBB 8375 (latest version) Radiography Evaluations of Thermite Welds on Transnet Freight Rail Railway lines

e) **Documentation and Reporting**: The contractor is responsible for maintaining detailed records of all welding activities, including locations, types of defects removed, materials used, and inspection results. Regular digitalised reports must be submitted to Transnet's designated representative i.e Ms Office word and excel format.

f) **Timeline and Coordination**: The project duration is six months, starting from the agreed-upon commencement date. The contractor must coordinate with the technical officer of the project management team to ensure minimal disruption to rail operations and adherence to the project schedule.

g) **Training and Certification:** All welding personnel must be adequately trained (minimum Trade hand level 4) and certified in aluminothermic welding techniques. Proof of certification and training must be provided.

3.3 Deliverables:

Bidders seeking to provide aluminothermic welding services for this project must meet the following requirements:

3.2.1 Experience and Expertise:

- Demonstrate a minimum of three years of experience in providing aluminothermic welding services.
- Provide case studies or references from at least three previous projects of similar scope and complexity.

3.2.2 Certification and Training:

- All welding personnel must hold relevant certifications (minimum trade hand level 4) in aluminothermic welding techniques.
- Submit proof of training and certification for all personnel who will be involved in the project.

3.2.3 Compliance and Quality Standards:

- Adhere to Chapter 11 in the Transnet Track Welding Manual (BBB8341), Manual for Track Maintenance (BBB0481), Written Safe Work Procedure (SMS/WP/P/021) and Transnet QP Aluminothermic Rail Welding Process (FRSMPMEC38) and all relevant industry standards.
- Implement a comprehensive quality control plan, including pre-weld and post-weld inspections.

3.2.4 Equipment and Materials:

- Demonstrate possession of or access to all necessary equipment and labour required for aluminothermic welding.
- Provide a list of equipment to be used, including details on their condition and maintenance records.

3.2.5 Documentation and Reporting:

- Agree to maintain detailed records of all welding activities and submit regular reports as specified in the scope of requirements.

2.2.6 References and Past Performance:

- Provide information for at least two references from previous projects who can attest to the bidder's performance on similar projects.
- Include letters of recommendation or performance evaluations if available.

Meeting these requirements will demonstrate the bidder's capability to successfully execute the aluminothermic welding services, ensuring high-quality results and adherence to safety and compliance standards".

4 GREEN ECONOMY / CARBON FOOTPRINT

Transnet wishes to have an understanding of your company's position with regard to environmental commitments, including key environmental characteristics such as waste disposal, recycling and energy conservation. *Please submit details of your entity's policies in this regard.*

5 GENERAL SUPPLIER OBLIGATIONS

5.1 The Supplier shall be fully responsible to Transnet for the acts and omissions of persons directly or indirectly employed by them.

5.2 The Supplier must comply with the requirements stated in this RFP.

6 EVALUATION METHODOLOGY

Transnet will utilise the following methodology and criteria in selecting a preferred Supplier:

Prequalification	**Stage 1**	**Stage 2**	**Stage 3**		
Step 1	**Step 2**	**Step 3**	**Step 4**	**Step 5**	**Step 6**
Administrative Responsiveness Returnable Documents & Schedules Verification that all Returnable Documents/ Schedules required have been submitted and are valid	**Substantive/ Mandatory Responsiveness** 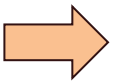	Functionality/ technical **70 points** Minimum Threshold Technical / Functional criteria & weightings must be stipulated in the tender document	**Weighted Scoring** **100***** **Price (80)** **Specific goals (80) (20)** 	**Post tender negotiations** Post tender negotiation with preferred bidder [2nd and 3rd ranked bidders (if required) in a sequential and not simultaneous manner] if pricing is not market-related	Award of business and conclusion of contract

NB: Evaluation of the various stages will normally take place in a sequential manner. However, in order to expedite the process, Transnet reserves the right to conduct the different steps of the evaluation process in parallel. In such instances the evaluation of bidders at any given stage must not be interpreted to mean that bidders have necessarily passed any previous stage(s).

6.1 STEP ONE: Test for Administrative Responsiveness

The test for administrative responsiveness will include the following:

Administrative responsiveness check	**RFP Reference**
• Whether the Bid has been lodged on time	*Section 2 paragraph 3*
• Whether all Returnable Documents and/or schedules [where applicable] were completed and returned by the closing date and time	*Section 5*
• Verify the validity of all returnable documents	*Section 5*
• Verify if the Bid document has been duly signed by the authorised respondent	*All sections*

The test for administrative responsiveness [Step One] must be passed for a Respondent's Proposal to progress to Step Two for further pre-qualification

6.2 **STEP TWO: Test for Substantive Responsiveness to RFP**

The test for substantive responsiveness to this RFP will include the following:

Check for substantive responsiveness	RFP Reference
• Whether any general and legislation qualification criteria set by Transnet, have been met	*All sections including*
• Whether the Bid contains a priced offer as prescribed in the pricing and delivery schedule	*Section 4*
• Whether the Bid materially complies with the scope and/or specification given	*All Sections*
• Whether the supplier is registered on the National Treasury Central Supplier Database (CSD)	*Section 2, paragraph 13*
• Whether any Technical pre-qualification/eligibility criteria set by Transnet have been met as follows: • -**Compliance:** *bidder shall provide proof of compliance to relevant industry standards and possession of relevant ISO certificates* ***(*****EN 14730-2, ISO 23300 or equivalent)** • *Letter of acknowledgement that strict adherence to all technical specifications, including materials, dimensions, and tolerances, as outlined in the Track Welding Manual.*	

The test for substantive responsiveness [Step Two] must be passed for a Respondent's proposal to progress to Step Three for further evaluation

6.3 **STEP THREE: STEP THREE: Minimum Threshold 70 points for Technical Criteria**

The test for the Technical and Functional threshold will include the following:

quality Criteria	Type of Document/Evidence to be submitted	Weighting points	Scoring Guideline
Technical Capability:			
Welding services: Bidder to provide a technical report that their services will comply to welding process stipulated in clause 11.11-11.21 of Track Welding Manual (BBB8341 VER 5) and Transnet QP Aluminothermic Rail Welding Process (FRSMPMEC38)	Detailed Technical Report showing to TFR that their welding process meet the requirements in clause 11 of Track Welding Manual and Transnet QP Aluminothermic Rail Welding Process (FRSMPMEC38)	30	**100%:** Submission of Technical Report by Bidder to TFR stating that their welding process meet the requirements in clause 11 of Track Welding Manual AND Transnet QP Aluminothermic Rail Welding Process (FRSMPMEC38) **50%:** Submission of Technical Report by Bidder to TFR stating that their welding process meet the requirements in clause 11 of Track Welding Manual OR Transnet QP Aluminothermic Rail Welding Process (FRSMPMEC38) **0%:** No submission of technical report by Bidder to TFR
Experience or Expertise: bidder shall provide proven track record in the form of previous projects completed-showcasing a minimum of cumulative three years in providing aluminothermic welding services and cut out record.	Case studies or references from previous projects of similar scope and complexity with a cumulative minimum of 3 years' experience providing aluminothermic welding services, and cut out record.	30	**100%:** Submission of case studies or references from previous projects of similar scope and complexity demonstrating cumulatively at least three years' experience, with cut out record with cut-out rate less than 5% **80%:** Submission of case studies or references from previous projects of similar scope and complexity demonstrating cumulatively two years' experience, with cut out record with cut-out rate less than 5% **50%:** Submission of case studies or references from previous projects of similar scope and complexity demonstrating cumulatively one year experience, with cut out record with cut-out rate less than 5% **0%:** No submission of case studies or references from at least three previous projects of similar scope and complexity and no cut out record provided or cut out rate is above 5%
Certification and Training: Bidder shall provide proof that all their Track Welders are adequately trained and certified to execute Track welding as per clause 1.3.1 of Track Welding Manual (BBB8341 VER 5) and Transnet QP Aluminothermic Rail Welding Process (FRSMPMEC38), using various Aluminothermic track welding techniques (QP and SKV).	Certified copies of Track Welders certificates of all welding personnel that will be involved in the project	30	**100%:** Submission of Certified copies of Track Welders certificates indicating certification in both QP AND SKV processes **50%:** Submission of Certified copies of Track Welders certificates indicating certification in QP OR SKV processes **0%:** No submission of Certified copies of Track Welders certificates

Equipment: Bidder shall provide proof that their equipment complies to clause 3.4.1 of Track Welding Manual (BBB8341 VER 5) and equipment maintenance record for both QP and SKV	Equipment inventory list and maintenance records	10	**100%:** Submission of Equipment inventory list and maintenance records indicating all the relevant equipment for QP AND SKV in working condition **50%:** Submission of Equipment inventory list and maintenance records indicating all the relevant equipment for QP OR SKV in working condition **0%:** No submission of Equipment inventory list and maintenance records
		100	

Respondents are to note that Transnet will round off final technical scores to the nearest 2 (two) decimal places for the purposes of determining whether the technical threshold has been met.

The minimum threshold for technical [Step Three] must be met or exceeded for a Respondent's Proposal to progress to Step Four for final evaluation

6.4 **STEP FOUR: Evaluation and Final Weighted Scoring**

a) **Price Criteria** [Weighted score 80 points]:

Evaluation Criteria	RFP Reference
• Commercial offer	*Section 4*

Transnet will utilise the following formula in its evaluation of Price:

$$PS = 80\left(1 - \frac{Pt - Pmin}{Pmin}\right)$$

Where:

Ps = Score for the Bid under consideration
Pt = Price of Bid under consideration
Pmin = Price of lowest acceptable Bid

b) **Specific Goals [**Weighted score 20 point]

- Specific goals claim form
- Preference points will be awarded to a bidder for attaining the specific goals requirements in accordance with the table indicated in Section 9 Table 3.2 of the specific goals Claim Form

6.5 **SUMMARY: Applicable Thresholds and Final Evaluated Weightings**

Thresholds	Minimum Threshold
Technical / functionality	70%

Evaluation Criteria	Final Weighted Scores
Price	80
Specific goals - Scorecard	20
TOTAL SCORE:	**100**

6.6 **STEP FIVE: Post Tender Negotiations (if applicable)**

- Respondents are to note that Transnet may not award a contract if the price offered is not market-related. In this regard, Transnet reserves the right to engage in PTN with the view to achieving a market-related price or to cancel the tender. Negotiations will be done in a sequential manner i.e.:
  - first negotiate with the highest ranked bidder or cancel the bid, should such negotiations fail,
  - negotiate with the 2nd and 3rd ranked bidders (if required) in a sequential manner.
- In the event of any Respondent being notified of such short-listed/preferred bidder status, his/her bid, as well as any subsequent negotiated best and final offers (BAFO), will automatically be deemed to remain valid during the negotiation period and until the ultimate award of business.
- Should Transnet conduct post tender negotiations, Respondents will be requested to provide their best and final offers to Transnet based on such negotiations. Where a market related price has been achieved through negotiation, the contract will be awarded to the successful Respondent(s).

6.7 **STEP SIX Award of business and conclusion of contract**

- Immediately after approval to award the contract has been received, the successful bidder(s) will be informed of the acceptance of his/their Bid by way of a Letter of Award. Thereafter the final contract will be concluded with the successful Respondent(s).
- A final contract will be concluded and entered into with the successful Bidder at the acceptance of a letter of award by the Respondent.

SECTION 4: PRICING AND DELIVERY SCHEDULE

Respondents are required to complete the table below:

Pricing Schedule

Item	Unit Measure	Quantity	Estimated rate (R)	Estimated cost (R)	Remarks
Thermite Welding Services	Per weld	400			
Accommodation	Per night				
Transportation	Rate Per kilometer				
TOTAL PRICE, exclusive of VAT:					
VAT 15% (if applicable)					
Total Inclusive of VAT (where applicable)					

Respondents are to note that Transnet will round off final pricing scores to the nearest 2 (two) decimal places.

Notes to Pricing:

a) Respondents are to note that if the price offered by the highest scoring bidder is not market-related, Transnet may not award the contract to that Respondent. Transnet may-

(i) negotiate a market-related price with the Respondent scoring the highest points or cancel the RFP;

(ii) if that Respondent does not agree to a market-related price, negotiate a market-related price with the Respondent scoring the second highest points or cancel the RFP;

(iii) if the Respondent scoring the second highest points does not agree to a market-related price, negotiate a market-related price with the Respondent scoring the third highest points or cancel the RFP.

If a market-related price is not agreed with the Respondent scoring the third highest points, Transnet must cancel the RFP.

b) Prices must be quoted in South African Rand inclusive of VAT.

c) Any disbursement not specifically priced for will not be considered/accepted by Transnet.

d) To facilitate like-for-like comparison bidders must submit pricing strictly in accordance with this pricing schedule and not utilise a different format. Deviation from this pricing schedule could result in a bid being declared non-responsive.

e) Prices are to be quoted on a delivered basis to specified site.

f) Please note that should you have offered a discounted price(s), Transnet will only consider such price discount(s) in the final evaluation stage if offered on an unconditional basis.

g) Manufacturing and delivery lead time calculated from date of receipt of purchase order: _____ weeks.

h) Respondents, if awarded the contract, are required to indicate that their prices quoted would be kept firm and fixed for the contract duration. [Not to be confused with bid validity period Section 2, clause 1]

YES	

1. DISCLOSURE OF CONTRACT INFORMATION

PRICES TENDERED

Respondents are to note that, on award of business, Transnet is required to publish the tendered prices of the successful and unsuccessful Respondents *inter alia* on the National Treasury e-Tender Publication Portal, (www.etenders.gov.za), as required per National Treasury Instruction Note 01 of 2015/2016.

JOHANNESBURG STOCK EXCHANGE DEBT LISTING REQUIREMENTS

Transnet may also be required to disclose information relating to the subsequent contract i.e. the name of the company, goods/services provided by the company, the value and duration of the contract, etc. in compliance with the Johannesburg Stock Exchange (JSE) Debt Listing Requirements.

DOMESTIC PROMINENT INFLUENTIAL PERSONS (DPIP) OR FOREIGN PROMINENT PUBLIC OFFICIALS (FPPO)

Transnet is free to procure the services of any person within or outside the Republic of South Africa in accordance with applicable legislation. Transnet shall not conduct or conclude business transactions, with any Respondents without having:

- Considered relevant governance protocols;
- Determined the DPIP or FPPO status of that counterparty; and
- Conducted a risk assessment and due diligence to assess the potential risks that may be posed by the business relationship.

As per the Transnet Domestic Prominent Influential Persons (DPIP) and Foreign Prominent Public Officials (FPPO) and Related Individuals Policy available on Transnet website https://www.transnet.net/search/pages/results.aspx?k=FPIDP#k=DPIP, Respondents are required to disclose any commercial relationship with a DPIP or FPPO (as defined in the Policy) by completing the following section:

The below form contains personal information as defined in the Protection of Personal Information Act, 2013 (the "Act"). By completing the form, the signatory consents to the processing of her/his personal information in accordance with the requirements of the Act. Consent cannot unreasonably be withheld.

Is the Respondent
(Complete with a "Yes" or "No")

A DPIP/FPPO		**Closely Related to a DPIP/FPPO**		**Closely Associated to a DPIP/FPPO**	

List all known business interests, in which a DPIP/FPPO may have a direct/indirect interest or significant participation or involvement.

No	**Name of Entity / Business**	**Role in the Entity / Business** (Nature of interest/ Participation)	**Shareholding %**	**Registration Number**	**Status** (Mark the applicable option with an X)	
					Active	**Non-Active**
1						
2						
3						

Respondents declaring a commercial relationship with a DPIP or FPPO are to note that Transnet is required to annually publish on its website a list of all business contracts entered into with DPIP or FPPO. This list will include successful Respondents, if applicable.

2. "AS AND WHEN REQUIRED" CONTRACTS

2.1 Purchase orders will be placed on the Supplier/Service provider(s) from time to time as and when Goods/Services are required.

2.2 Transnet reserves the right to place purchase orders until the last day of the contract for deliveries to be effected, within the delivery period / lead time specified, beyond the expiry date of the contract under the same terms and conditions as agreed upon.

2.3 Delivery requirements may be stipulated in purchase orders and scheduled deliveries may be called for. However, delivery periods and maximum monthly rates of delivery offered by the Respondents will be used as guidelines in establishing lead times and monthly delivery requirements with the Supplier.

2.4 Where scheduled deliveries are required, the delivery period(s) specified must be strictly complied with, unless otherwise requested by Transnet. Material supplied earlier than specified may not be paid for or may be returned by Transnet, with the Supplier being held liable for all expenses so incurred, e.g. handling and transport charges.

2.5 If the delivery period offered by the Respondents is subject to a maximum monthly production capacity, full particulars must be indicated in Section 4 *[Pricing and Delivery Schedule]*

2.6 The Respondent must state hereunder its annual holiday closedown period [if applicable] and whether this period has been included in the delivery lead time offered:

3. MANUFACTURERS

The Respondents must state hereunder the actual manufacturer(s) of the Goods tendered for:

3.1 Local Manufacturer(s):

RFP ITEM NO.	NAME	BUSINESS ADDRESS

3.2 Foreign Manufacturer(s):

RFP ITEM NO.	NAME	BUSINESS ADDRESS

4. NATIONAL RAILWAY SAFETY REGULATOR ACT

In compliance with the National Railway Safety Regulator Act, 16 of 2002, the successful Respondent [**the Supplier**] shall ensure that the Goods to be supplied to Transnet, under the terms and conditions of a contract between the parties, comply fully with the specifications as set out in the technical evaluation of this RFP, and shall also adhere to railway safety requirements and/or regulations [as applicable]. Permission for the engagement of a subcontractor by the Supplier, as applicable, both initially and during the course of a contract, shall be subject to a review of the capability of the proposed subcontractor to comply with the specified railway safety requirements and/or regulations. The Supplier and/or its subcontractor shall grant Transnet access, during the term of the contract, to review any safety-related activities, including the coordination of such activities across all parts of the organisation.

Accepted:

YES		**NO**	

5. SERVICE LEVELS

5.1 An experienced national account representative(s) is required to work with Transnet's procurement department. [No sales representatives are needed for individual department or locations]. Additionally, there shall be a minimal number of people, fully informed and accountable for this agreement.

5.2 Transnet will have quarterly reviews with the Supplier account representative on an on-going basis.

5.3 Transnet reserves the right to request that any member of the Supplier team involved on the Transnet account be replaced if deemed not to be adding value for Transnet.

5.4 The Supplier guarantees that it will achieve a 95% [ninety-five per cent] service level on the following measures:

a) Random checks on compliance with quality/quantity/specifications

b) On-time delivery

5.5 The Supplier must provide a telephone number for customer service calls.

5.6 Failure of the Supplier to comply with stated service level requirements will give Transnet the right to cancel the contract in whole, without penalty to Transnet, giving 30 [thirty] calendar days' notice to the Supplier of its intention to do so.

Acceptance of Service Levels:

YES		**NO**	

6. TOTAL COST OF OWNERSHIP AND CONTINUOUS IMPROVEMENT INITIATIVES

6.1 Respondents shall indicate whether they would be committed, for the duration of any contract which may be awarded through this RFP process, to participate with Transnet in its continuous improvement initiatives to reduce the total cost of ownership [**TCO**], which will reduce the overall cost of transportation Goods/Services and related logistics provided by Transnet's operating divisions within South Africa to the ultimate benefit of all end-users.

Accepted:

YES		**NO**	

If "yes", please specify details in paragraph 6.2 below.

6.2 Respondents must briefly describe their commitment to TCO and continuous improvement initiatives and give examples of specific areas and strategies where cost reduction initiatives can be introduced. Specific areas and proposed potential savings percentages should be included. Additional information can be appended to the Respondent's Proposal if there is insufficient space available below.

_____

_____

7. RISK

Respondents must elaborate on the control measures put in place by their entity, which would mitigate the risk to Transnet pertaining to potential non-performance by the Respondent, in relation to:

7.1 **Quality and specification of Goods/Services delivered:**

_____

_____

7.2 **Continuity of supply**:

_____

_____

7.3 **Compliance with the Occupational Health and Safety Act, 85 of 1993:**

_____

_____

7.4 **Compliance with the National Railway Safety Regulator Act, 16 of 2002:**

_____

_____

SIGNED at _____ on this _____ day of _____ 20___

SIGNATURE OF WITNESSES

ADDRESS OF WITNESSES

1 _____ _____

Name _____ _____

2 _____ _____

Name _____ _____

SIGNATURE OF RESPONDENT'S AUTHORISED REPRESENTATIVE: _____

NAME: _____

DESIGNATION: _____

SECTION 5: PROPOSAL FORM AND LIST OF RETURNABLE DOCUMENTS

I/We_____
[name of entity, company, close corporation or partnership] of *[full address]*
_____
_____
carrying on business trading/operating as
_____
represented by_____
in my capacity as _____
being duly authorised thereto by a Resolution of the Board of Directors or Members or Certificate of Partners, dated _____to enter into, sign execute and complete any documents relating to this proposal and any subsequent Agreement. The following list of persons are hereby authorised to negotiate on behalf of the abovementioned entity, should Transnet decide to enter into Post Tender Negotiations with highest ranked bidder(s).

FULL NAME(S)	CAPACITY	SIGNATURE
_____	_____	_____
_____	_____	_____
_____	_____	_____
_____	_____	_____

I/We hereby offer to supply/provide the abovementioned Goods/Services at the prices quoted in the schedule of prices in accordance with the terms set forth in the documents listed in the accompanying schedule of RFP documents.

I/We agree to be bound by those conditions in Transnet's:

(i) Master Agreement (which may be subject to amendment at Transnet's discretion if applicable);

(ii) General Bid Conditions; and

(iii) any other standard or special conditions mentioned and/or embodied in this Request for Proposal.

I/We accept that unless Transnet should otherwise decide and so inform me/us in the letter of award, this Proposal [and, if any, its covering letter and any subsequent exchange of correspondence], together with Transnet's acceptance thereof shall constitute a binding contract between Transnet and me/us.

Should Transnet decide that a formal contract should be signed and so inform me/us in a letter of award [the **Letter of Award**], this Proposal [and, if any, its covering letter and any subsequent exchange of correspondence] together with Transnet's Letter of Award, shall constitute a binding contract between Transnet and me/us until the formal contract is signed.

I/We further agree that if, after I/we have been notified of the acceptance of my/our Proposal, I/we fail to enter into a formal contract if called upon to do so, or fail to commence the supply/provision of Goods/Services within 2 [two] weeks thereafter, Transnet may, without prejudice to any other legal remedy which it may have, recover from me/us

any expense to which it may have been put in calling for Proposals afresh and/or having to accept any less favourable Proposal.

Furthermore, I/we agree to a penalty clause/s which will allow Transnet to invoke a penalty against us for non-compliance with material terms of this RFP including the delayed delivery of the Goods/Services due to non-performance by ourselves, , etc.

I/we agree that non-compliance with any of the material terms of this RFP, including those mentioned above, will constitute a material breach of contract and provide Transnet with cause for cancellation.

ADDRESS FOR NOTICES

The law of the Republic of South Africa shall govern any contract created by the acceptance of this RFP. The *domicilium citandi et executandi* shall be a place in the Republic of South Africa to be specified by the Respondent hereunder, at which all legal documents may be served on the Respondent who shall agree to submit to the jurisdiction of the courts of the Republic of South Africa. Foreign Respondents shall, therefore, state hereunder the name of their authorised representative in the Republic of South Africa who has the power of attorney to sign any contract which may have to be entered into in the event of their Proposal being accepted and to act on their behalf in all matters relating to such contract.

Respondent to indicate the details of its *domicilium citandi et executandi* hereunder:

Name of Entity:

_____

Facsimile: _____

Address: _____

_____

NOTIFICATION OF AWARD OF RFP

As soon as possible after approval to award the contract(s), the successful Respondent [**the Supplier/Service provider**] will be informed of the acceptance of its Proposal. Transnet will also publish the outcome of the tender, including successful and unsuccessful bidders, in the National Treasury e-tender portal. Any unsuccessful bidder has a right to request reasons for the bid not to be successful and Transnet has a duty to provide those reasons on receipt of the request from the bidder.

VALIDITY PERIOD

Transnet requires a validity period of 180 Business Days **[03 May 2025]** against this RFP, excluding the first day and including the last day.

NAME(S) AND ADDRESS / ADDRESSES OF DIRECTOR(S) OR MEMBER(S)

The Respondent must disclose hereunder the full name(s) and address(s) of the director(s) or members of the company or close corporation [**C.C.**] on whose behalf the RFP is submitted.

(i) Registration number of company / C.C. _____

(ii) Registered name of company / C.C. _____

(iii) Full name(s) of director/member(s) Address/Addresses ID Number(s)

_____

_____

_____

RETURNABLE DOCUMENTS

Returnable Documents means all the documents, Sections and Annexures, as listed in the tables below. There are three types of returnable documents as indicated below and Respondents are urged to ensure that these documents are returned with their bids based on the consequences of non-submission as indicated below:

Mandatory Returnable Documents	***Failure to provide all these Mandatory Returnable Documents at the Closing Date and time of this RFP will result in a Respondent's disqualification.***
Returnable Documents Used for Scoring	***Failure to provide all Returnable Documents used for purposes of scoring a bid, by the closing date and time of this bid will not result in a Respondent's disqualification. However, Bidders will receive an automatic score of zero for the applicable evaluation criterion.***
Essential Returnable Documents	***Failure to provide essential Returnable Documents will result in Transnet affording Respondents a further opportunity to submit by a set deadline. Should a Respondent thereafter fail to submit the requested documents, this may result in a Respondent's disqualification.***

All Returnable Sections, as indicated in the header and footer of the relevant pages, must be signed, stamped and dated by the Respondent.

a) Mandatory Returnable Documents

Respondents are required to submit with their bid submissions the following **Mandatory Returnable Documents,** and also to confirm submission of these documents by so indicating [Yes or No] in the tables below:

MANDATORY RETURNABLE DOCUMENTS	SUBMITTED [Yes/No]
SECTION 4 : Pricing and Delivery Schedule	
• Whether any Technical pre-qualification/eligibility criteria set by Transnet have been met as follows: • -**Compliance:** *bidder shall provide proof of compliance to relevant industry standards and possession of relevant ISO certificates* ***(EN 14730-2, ISO 23300 or equivalent)*** • *Letter of acknowledgement that strict adherence to all technical specifications, including materials, dimensions, and tolerances, as outlined in the Track Welding Manual.*	

b) Returnable Documents Used for Scoring

In addition to the requirements of section (a) above, Respondents are further required to submit with their Proposals the following **Returnable Documents Used for Scoring** and also to confirm submission of these documents by so indicating [Yes or No] in the table below:

RETURNABLE DOCUMENTS USED FOR SCORING	**SUBMITTED [Yes or No]**
Respondent's valid proof of evidence to claim points for compliance with Specific Goals' requirements as stipulated in Section 9 of this RFP • B-BBEE Certificate / Sworn- Affidavit / B-BBEE CIPC Certificate (in case of JV, a consolidated scorecard will be accepted) as per DTIC guideline	
• EME or QSE at least 51% Black Owned (B-BBEE Certificate / Sworn-Affidavit / CIPC Certificate)	
• Entities that are 51 % Black Owned (CI B-BBEE Certificate / Sworn- Affidavit / B-BBEE CIPC Certificate (in case of JV, a consolidated scorecard will be accepted) as per DTIC guideline)	
Technical Evaluations • **Welding services:** Bidder to provide a technical report that their services will comply to welding process stipulated in clause 11.11-11.21 of Track Welding Manual (BBB8341 VER 5) and Transnet QP Aluminothermic Rail Welding Process (FRSMPMEC38)	
Experience or Expertise: Case studies or references from previous projects of similar scope and complexity with a cumulative minimum of 3 years' experience providing aluminothermic welding services, and cut out record.	
• **Certification and Training:** Certified copies of Track Welders certificates of all welding personnel that will be involved in the project	
• **Equipment** Equipment inventory list and maintenance records	

c) Essential Returnable Documents:

Over and the above the requirements of section (a) and (b) mentioned above, Respondents are further required to submit with their Proposals the following **Essential Returnable Documents** and also to confirm submission of these documents by so indicating [Yes or No] in the table below:

ESSENTIAL RETURNABLE DOCUMENTS & SCHEDULES	**SUBMITTED [Yes or No]**
In the case of Joint Ventures, a copy of the Joint Venture Agreement or written confirmation of the intention to enter into a Joint Venture Agreement	
Latest Financial Statements signed by your Accounting Officer or latest Audited Financial Statements plus 2 previous years	
SECTION 1: SBD1 FORM	
SECTION 5 : Proposal Form and List of Returnable documents	
SECTION 6 : Certificate Of Acquaintance with RFP, Terms & Conditions & Applicable Documents	
SECTION 7 : RFP Declaration and Breach of Law Form	

SECTION 9: Specific goals points claim form	
SECTION 10: Protection of Personal Information	
CSD Registration report	
Tax Compliance Status	

CONTINUED VALIDITY OF RETURNABLE DOCUMENTS

The successful Respondent will be required to ensure the validity of all returnable documents, including but not limited to its valid proof of B-BBEE status, for the duration of any contract emanating from this RFP. Should the Respondent be awarded the contract [**the Agreement]** and fail to present Transnet with such renewals as and when they become due, Transnet shall be entitled, in addition to any other rights and remedies that it may have in terms of the eventual Agreement, to terminate such Agreement immediately without any liability and without prejudice to any claims which Transnet may have for damages against the Respondent.

SIGNED at _____ on this _____ day of _____ 20___

SIGNATURE OF WITNESSES ADDRESS OF WITNESSES

1 _____ _____

Name _____ _____

2 _____ _____

Name _____ _____

SIGNATURE OF RESPONDENT'S AUTHORISED REPRESENTATIVE: _____

NAME: _____

DESIGNATION: _____

SECTION 6: CERTIFICATE OF ACQUAINTANCE WITH RFP, MASTER AGREEMENT & APPLICABLE DOCUMENTS

By signing this certificate the Respondent is deemed to acknowledge that he/she has made himself/herself thoroughly familiar with, and agrees with all the conditions governing this RFP. This includes those terms and conditions contained in any printed form stated to form part hereof, including but not limited to the documents stated below. As such, Transnet SOC Ltd will recognise no claim for relief based on an allegation that the Respondent overlooked any such term or condition or failed properly to take it into account for the purpose of calculating tendered prices or any other purpose:

1	Transnet's General Bid Conditions
2	Master Agreement and SLA attached
3	Transnet's Supplier Integrity Pact
4	Non-disclosure Agreement
5	Specifications and drawings attached to this RFP

Note: Should a Respondent be successful and awarded the bid, they will be required to complete a Supplier Declaration Form for registration as a vendor onto the Transnet vendor master database.

Should the Bidder find any terms or conditions stipulated in any of the relevant documents quoted in the RFP unacceptable, it should indicate which conditions are unacceptable and offer alternatives by written submission on its company letterhead, attached to its submitted Bid. Any such submission shall be subject to review by Transnet's Legal Counsel who shall determine whether the proposed alternative(s) are acceptable or otherwise, as the case may be. A material deviation from any term or condition may result in disqualification.

Bidders accept that an obligation rests on them to clarify any uncertainties regarding any bid to which they intend to respond on, before submitting the bid. **The Bidder agrees that he/she will have no claim or cause of action based on an allegation that any aspect of this RFP was unclear but in respect of which he/she failed to obtain clarity.**

The bidder understands that his/her Bid will be disqualified if the Certificate of Acquaintance with RFP documents included in the RFP as a returnable document, is found not to be true and complete in every respect.

SIGNED at _____ on this _____ day of _____ 20___

SIGNATURE OF WITNESSES ADDRESS OF WITNESSES

1 _____ _____

Name _____ _____

2 _____ _____

Name _____ _____

SIGNATURE OF RESPONDENT'S AUTHORISED REPRESENTATIVE: _____

NAME: _____

DESIGNATION: _____

SECTION 7: RFP DECLARATION AND BREACH OF LAW FORM

NAME OF ENTITY: _____

We _____ do hereby certify that:

1. Transnet has supplied and we have received appropriate responses to any/all questions [as applicable] which were submitted by ourselves for RFP Clarification purposes;

2. We have received all information we deemed necessary for the completion of this Request for Proposal [**RFP**];

3. We have been provided with sufficient access to the existing Transnet facilities/sites and any and all relevant information relevant to the Goods/Services as well as Transnet information and Employees, and have had sufficient time in which to conduct and perform a thorough due diligence of Transnet's operations and business requirements and assets used by Transnet. Transnet will therefore not consider or permit any pre- or post-contract verification or any related adjustment to pricing, service levels or any other provisions/conditions based on any incorrect assumptions made by the Respondent in arriving at his Bid Price.

4. At no stage have we received additional information relating to the subject matter of this RFP from Transnet sources, other than information formally received from the designated Transnet contact(s) as nominated in the RFP documents;

5. We are satisfied, insofar as our entity is concerned, that the processes and procedures adopted by Transnet in issuing this RFP and the requirements requested from Bidders in responding to this RFP have been conducted in a fair and transparent manner;

6. We have complied with all obligations of the Bidder/Supplier as indicated in the Transnet Supplier Integrity which includes but are not limited to ensuring that we take all measures necessary to prevent corrupt practices, unfairness and illegal activities in order to secure or in furtherance to secure a contract with Transnet;

7. We declare that a family, business and/or social relationship **exists / does not exist** [delete as applicable] between an owner / member / director / partner / shareholder of our entity and an employee or board member of the Transnet Group including any person who may be involved in the evaluation and/or adjudication of this Bid;

8. We declare that an owner / member / director / partner / shareholder of our entity **is / is not** [delete as applicable] an employee or board member of Transnet;

9. In addition, we declare that an owner / member / director / partner / shareholder/employee of our entity **has / has not been** [delete as applicable] a former employee or board member of Transnet in the past 10 years. I further declare that if they were a former employee or board member of Transnet in the past 10 years that they **were/were not** involved in the bid preparation or had access to the information related to this RFP; and

10. If such a relationship as indicated in paragraph 7, 8 and/or 9 exists, the Respondent is to complete the following section:

FULL NAME OF OWNER/MEMBER/DIRECTOR/
PARTNER/SHAREHOLDER/EMPLOYEE: ADDRESS:

_____

_____

Indicate nature of relationship with Transnet:

_____

_____

[Failure to furnish complete and accurate information in this regard will lead to the disqualification of a response and may preclude a Respondent from doing future business with Transnet. Information provided in the declarations may be used by Transnet and/or its affiliates to verify the correctness of the information provided]

11. We declare, to the extent that we are aware or become aware of any relationship between ourselves and Transnet [other than any existing and appropriate business relationship with Transnet] which could unfairly advantage our entity in the forthcoming adjudication process, we shall notify Transnet immediately in writing of such circumstances.

BIDDER'S DISCLOSURE (SBD4)

12 PURPOSE OF THE FORM

12.1 Any person (natural or juristic) may make an offer or offers in terms of this invitation to bid. In line with the principles of transparency, accountability, impartiality, and ethics as enshrined in the Constitution of the Republic of South Africa and further expressed in various pieces of legislation, it is required for the bidder to make this declaration in respect of the details required hereunder.

12.2 Where a person/s are listed in the Register for Tender Defaulters and / or the List of Restricted Suppliers, that person will automatically be disqualified from the bid process.

13 Bidder's declaration

13.1 Is the bidder, or any of its directors / trustees / shareholders / members / partners or any person having a controlling interest[1] in the enterprise, employed by the state? **YES/NO**

13.1.1. If so, furnish particulars of the names, individual identity numbers, and, if applicable, state employee numbers of sole proprietor/ directors / trustees / shareholders / members/ partners or any person having a controlling interest in the enterprise, in table below.

[1] the power, by one person or a group of persons holding the majority of the equity of an enterprise, alternatively, the person/s having the deciding vote or power to influence or to direct the course and decisions of the enterprise.

Full Name	Identity Number	Name of State institution

13.2 Do you, or any person connected with the bidder, have a relationship with any person who is employed by the procuring institution? **YES/NO**

13.2.1. If so, furnish particulars:

……

……

13.3 Does the bidder or any of its directors / trustees / shareholders / members / partners or any person having a controlling interest in the enterprise have any interest in any other related enterprise whether or not they are bidding for this contract? **YES/NO**

13.3.1. If so, furnish particulars:

……

……

14 DECLARATION

I, the undersigned, (name)…… in submitting the accompanying bid, do hereby make the following statements that I certify to be true and complete in every respect:

14.1 I have read and I understand the contents of this disclosure;

14.2 I understand that the accompanying bid will be disqualified if this disclosure is found not to be true and complete in every respect;

14.3 The bidder has arrived at the accompanying bid independently from, and without consultation, communication, agreement or arrangement with any competitor. However, communication between partners in a joint venture or consortium[2] will not be construed as collusive bidding.

14.4 In addition, there have been no consultations, communications, agreements or arrangements with any competitor regarding the quality, quantity, specifications, prices, including methods, factors or formulas used to calculate prices, market allocation, the intention or decision to submit or not to submit the bid, bidding with the intention not to win the bid and conditions or delivery particulars of the products or services to which this bid invitation relates.

14.5 The terms of the accompanying bid have not been, and will not be, disclosed by the bidder, directly or indirectly, to any competitor, prior to the date and time of the official bid opening or of the awarding of the contract.

14.6 There have been no consultations, communications, agreements or arrangements made by the bidder with any official of the procuring institution in relation to this procurement process prior to and during the bidding process except to provide clarification on the bid submitted where so required by the institution; and the bidder was not involved in the drafting of the specifications or terms of reference for this bid.

14.7 I am aware that, in addition and without prejudice to any other remedy provided to combat any restrictive practices related to bids and contracts, bids that are suspicious will be reported to the Competition Commission for investigation and possible imposition of administrative penalties in terms of section 59 of the Competition Act No 89 of 1998 and or may be reported to the National Prosecuting Authority (NPA) for criminal investigation and or may be restricted from conducting business with the public sector for a period not exceeding ten (10) years in terms of the Prevention and Combating of Corrupt Activities Act No 12 of 2004 or any other applicable legislation.

I CERTIFY THAT THE INFORMATION FURNISHED IN PARAGRAPHS 12, 13 and 14 ABOVE IS CORRECT.

I ACCEPT THAT THE STATE MAY REJECT THE BID OR ACT AGAINST ME IN TERMS OF PARAGRAPH 6 OF PFMA SCM INSTRUCTION 03 OF 2021/22 ON PREVENTING AND COMBATING ABUSE IN THE SUPPLY CHAIN MANAGEMENT SYSTEM SHOULD THIS DECLARATION PROVE TO BE FALSE.

BREACH OF LAW

We further hereby certify that *I/we* (the bidding entity and/or any of its directors, members or partners)***have/have not been*** [delete as applicable] found guilty during the preceding 5 [five] years of a serious breach of law, including but not limited to a breach of the Competition Act, 89 of 1998, by a court of law, tribunal or other administrative body. The type of breach that the Respondent is required to disclose excludes relatively minor offences or misdemeanours, e.g. traffic offences. This includes the imposition of an administrative fine or penalty.
Where found guilty of such a serious breach, please disclose:

[2] Joint venture or Consortium means an association of persons for the purpose of combining their expertise, property, capital, efforts, skill and knowledge in an activity for the execution of a contract.

NATURE OF BREACH:

_____

_____

DATE OF BREACH:_____

Furthermore, I/we acknowledge that Transnet SOC Ltd reserves the right to exclude any Respondent from the bidding process, should that person or entity have been found guilty of a serious breach of law, tribunal or regulatory obligation.

SIGNED at _____ on this _____ day of _____ 20___

For and on behalf of _____ duly authorised hereto	AS WITNESS:
Name:	Name:
Position:	Position:
Signature:	Signature:
Date:	Registration No of Company/CC
Place:	Registration Name of Company/CC

SECTION 8: RFP CLARIFICATION REQUEST FORM

RFP No: **HOAC-HO-0047619**

RFP deadline for questions / RFP Clarifications: Before 12:00 pm on 28 August 2024

TO:	Transnet SOC Ltd
ATTENTION:	Delisiwe Mngomezulu
EMAIL	[Delisiwe. Mngomezulu@transnet.net]
DATE:	_____
FROM:	_____
	_____

RFP Clarification No *[to be inserted by Transnet]* .....

REQUEST FOR RFP CLARIFICATION

_____
_____
_____
_____
_____
_____
_____
_____
_____
_____
_____
_____
_____
_____
_____
_____
_____
_____

SECTION 9 : SPECIFIC GOALS POINTS CLAIM FORM

This preference form must form part of all bids invited. It contains general information and serves as a claim for preference points for specific goals Contribution. Transnet will award preference points to companies who provide valid proof of evidence of as per the table below.

NB: BEFORE COMPLETING THIS FORM, BIDDERS MUST STUDY THE GENERAL CONDITIONS, DEFINITIONS AND DIRECTIVES APPLICABLE IN RESPECT OF SPECIFIC GOALS, AS PRESCRIBED IN THE PREFERENTIAL PROCUREMENT POLICY FRAMEWORK ACT, 2000.

---

1. GENERAL CONDITIONS

1.1 The following preference point systems are applicable to all bids:

- the 80/20 system for requirements with a Rand value of up to R50 000 000 (all applicable taxes included).

1.2 The value of this bid is estimated **to not exceed R50 000 000** (all applicable taxes included) and therefore the **80/20** preference point system shall be applicable. Despite the stipulated preference point system, Transnet shall use the lowest acceptable bid to determine the applicable preference point system in a situation where all received acceptable bids are received outside the stated preference point system.

1.3 Preference points for this bid shall be awarded for:

(a) Price;

(b) B-BBEE Status Level of Contribution; and

(c) Any other specific goal determined in Transnet preferential procurement policy.

1.4 The maximum points for this bid are allocated as follows:

	POINTS
PRICE	**80**
Specific goals – Scorecard -B-BBEE Level of contributor (1 or 2) - EME or QSE at least 51% Black Owned -Entities that are at least 51% Black Owned - Non-Compliant and/or B-BBEE Level 3-8 contributors	**10** **5** **5** **0**
Total points for Price and Specific Goals must not exceed	**100**

1.5 Failure on the part of a bidder to submit proof of evidence for any of the specific goals together with the bid will be interpreted to mean that preference points are not claimed.

1.6 The purchaser reserves the right to require of a bidder, either before a bid is adjudicated or at any time subsequently, to substantiate any claim in regard to preferences, in any manner required by the purchaser.

2. DEFINITIONS

(a) **"all applicable taxes"** includes value-added tax, pay as you earn, income tax, unemployment insurance fund contributions and skills development levies;

(b) **"B-BBEE"** means broad-based black economic empowerment as defined in section 1 of the Broad-Based Black Economic Empowerment Act;

(c) "**B-BBEE status level of contributor"** means the B-BBEE status received by a measured entity based on its overall performance using the relevant scorecard contained in the Codes of Good Practice on Black Economic Empowerment, issued in terms of section 9(1) of the Broad-Based Black Economic

Empowerment Act;

(d) **"Ownership"** means 51% black ownership

(e) **"bid"** means a written offer in a prescribed or stipulated form in response to an invitation by an organ of state for the supply/provision of services, works or goods, through price quotations, advertised competitive bidding processes or proposals;

(f) **"Broad-Based Black Economic Empowerment Act"** means the Broad-Based Black Economic Empowerment Act, 2003 (Act No. 53 of 2003);

(g) **"EME"** means an Exempted Micro Enterprise as defines by Codes of Good Practice under section 9 (1) of the Broad-Based Black Economic Empowerment Act, 2003 (Act No. 53 of 2003);

(h) **"functionality"** means the ability of a bidder to provide goods or services in accordance with specification as set out in the bid documents

(i) **"Price"** includes all applicable taxes less all unconditional discounts.

(j) **"Proof of B-BBEE Status Level of Contributor"**

i) the B-BBBEE status level certificate issued by an authorised body or person;

ii) a sworn affidavit as prescribed by the B-BBEE Codes of Good Practice; or

iii) any other requirement prescribed in terms of the B-BBEE Act.

(k) **"QSE"** means a Qualifying Small Enterprise as defines by Codes of Good Practice under section 9 (1) of the Broad-Based Black Economic Empowerment Act, 2003 (Act No. 53 of 2003);

(l) **"rand value"** means the total estimated value of a contract in South African currency, calculated at the time of bid invitations, and includes all applicable taxes and excise duties.

(m) **"Specific goals"** means targeted advancement areas or categories of persons or groups either previously disadvantaged or falling within the scope of the Reconstruction and Development Programme identified by Transnet to be given preference in allocation of procurement contracts in line with section 2(1) of the PPPFA.

3. POINTS AWARDED FOR PRICE

3.1 THE 80/20 PREFERENCE POINT SYSTEMS

A maximum of **80** points is allocated for price on the following basis:

80/20

$$PS = 80\left(1 - \frac{Pt - Pmin}{Pmin}\right)$$

Where

Ps = Points scored for comparative price of bid under consideration

Pt = Comparative price of bid under consideration

Pmin = Comparative price of lowest acceptable bid

3.2

Selected Specific Goal	Number of points allocated (20)
Specific goals – Scorecard	
-B-BBEE Level of contributor (1 or 2)	10
- EME or QSE at least 51% Black Owned	5
-Entities that are at least 51% Black Owned	5
- Non-Compliant and/or B-BBEE Level 3-8 contributors	0

4. EVIDENCE REQUIRED FOR CLAIMING SPECIFIC GOALS

4.1 In terms of Transnet Preferential Procurement Policy (TPPP) and Procurement Manuals, preference points must be awarded to a bidder for providing evidence in accordance with the table below:

Specific Goals	Acceptable Evidence
B-BBEE	B-BBEE Certificate / Sworn- Affidavit / B-BBEE CIPC Certificate (in case of JV, a consolidated scorecard will be accepted) as per DTIC guideline
EME or QSE at least 51% Black Owned	B-BBEE Certificate / Sworn-Affidavit / CIPC Certificate
Entities that are 51 % Black Owned	CI B-BBEE Certificate / Sworn- Affidavit / B-BBEE CIPC Certificate (in case of JV, a consolidated scorecard will be accepted) as per DTIC guideline

4.2 The table below indicates the required proof of B-BBEE status depending on the category of enterprises:

Enterprise	**B-BBEE Certificate & Sworn Affidavit**
Large	Certificate issued by SANAS accredited verification agency
QSE	Certificate issued by SANAS accredited verification agency Sworn Affidavit signed by the authorised QSE representative and attested by a Commissioner of Oaths confirming annual turnover and black ownership (only black-owned QSEs - 51% to 100% Black owned) [Sworn affidavits must substantially comply with the format that can be obtained on the DTI's website at www.dti.gov.za/economic_empowerment/bee_codes.jsp.]
EME[3]	Sworn Affidavit signed by the authorised EME representative and attested by a Commissioner of Oaths confirming annual turnover and black ownership Certificate issued by CIPC (formerly CIPRO) confirming annual turnover and black ownership Certificate issued by SANAS accredited verification agency only if the EME is being measured on the QSE scorecard

4.3 A trust, consortium or joint venture (including unincorporated consortia and joint ventures) must submit a consolidated B-BBEE Status Level verification certificate for every separate bid.

4.4 Tertiary Institutions and Public Entities will be required to submit their B-BBEE status level certificates in terms of the specialized scorecard contained in the B-BBEE Codes of Good Practice.

4.5 A person will not be awarded points for B-BBEE status level if it is indicated in the bid documents that such a bidder intends sub-contracting more than 25% of the value of the contract to any other enterprise that does not qualify for at least the points that such a bidder qualifies for, unless the intended sub-contractor is an EME that has the capability and ability to execute the sub-contract.

4.6 A person awarded a contract may not sub-contract more than 25% of the value of the contract to any other enterprise that does not have an equal or higher B-BBEE status level than the person concerned, unless the contract is sub-contracted to an EME that has the capability and ability to execute the sub-contract.

4.7 Bidders are to note that the rules pertaining to B-BBEE verification and other B-BBEE requirements may be changed from time to time by Transnet or regulatory bodies such as National Treasury or the DTI. It is the Bidder's responsibility to ensure that his/her bid complies fully with all B-BBEE requirements at the time of the submission of the bid.

5. BID DECLARATION

5.1 Bidders who claim points in respect of B-BBEE Status Level of Contribution must complete the following:

6. B-BBEE STATUS LEVEL OF CONTRIBUTION CLAIMED IN TERMS OF PARAGRAPHS 6.1

6.1 B-BBEE Status Level of Contribution: . = ……(based on point distribution per Table 3.2)

(Points claimed in respect of paragraph 6.1 must be in accordance with the table reflected in table 3.2 and must be substantiated by relevant proof of B-BBEE status level of contributor.

7. SUB-CONTRACTING

7.1 Will any portion of the contract be sub-contracted?

(***Tick applicable box***)

YES		NO	

7.1.1 If yes, indicate:

i) What percentage of the contract will be subcontracted.....%
ii) The name of the sub-contractor……..
iii) The B-BBEE status level of the sub-contractor.....
iv) Whether the sub-contractor is an EME or QSE.
(Tick applicable box)

YES		NO	

v) Specify, by ticking the appropriate box, if subcontracting with any of the following enterprises:

	Designated Group: An EME or QSE which is at last 51% owned by:	EME √	QSE √
	Black people		
	Black people who are youth		
	Black people who are women		
	Black people with disabilities		
	Black people living in rural or underdeveloped areas or townships		
	Cooperative owned by black people		
	Black people who are military veterans		
	OR		
	Any EME		
	Any QSE		

8. **DECLARATION WITH REGARD TO COMPANY/FIRM**

8.1 Name of company/firm:……

8.2 VAT registration number:……

8.3 Company registration number:……

8.4 TYPE OF COMPANY/ FIRM

- □ Partnership/Joint Venture / Consortium
- □ One person business/sole propriety
- □ Close corporation
- □ Company
- □ (Pty) Limited

[TICK APPLICABLE BOX]

8.5 DESCRIBE PRINCIPAL BUSINESS ACTIVITIES

……
……

8.6 COMPANY CLASSIFICATION

- □ Manufacturer

- ☐ Supplier
- ☐ Professional Supplier/Service provider
- ☐ Other Suppliers/Service providers, e.g. transporter, etc.

[*TICK APPLICABLE BOX*]

8.7 Total number of years the company/firm has been in business:……

8.8 I/we, the undersigned, who is / are duly authorised to do so on behalf of the company/firm, certify that the points claimed, based on the B-BBE status level of contribution indicated in paragraphs 6.1 of the foregoing certificate, qualifies the company/ firm for the preference(s) shown and I / we acknowledge that:

i) The information furnished is true and correct;

ii) The preference points claimed are in accordance with the General Conditions as indicated in paragraph 1 of this form;

iii) In the event of a contract being awarded as a result of points claimed as shown in paragraph 6.1, the contractor may be required to furnish documentary proof to the satisfaction of the purchaser that the claims are correct;

iv) If a bidder submitted false information regarding its evidence regarding specific goals or any other matter required in terms of the Preferential Procurement Regulations, 2022 which will affect or has affected the evaluation of a bid the purchaser may, in addition to any other remedy it may have

(a) disqualify the person from the bidding process;

(b) recover costs, losses or damages it has incurred or suffered as a result of that person's conduct;

(c) cancel the contract and claim any damages which it has suffered as a result of having to make less favourable arrangements due to such cancellation;

(d) if the successful bidder subcontracted a portion of the bid to another person without disclosing it, Transnet reserves the right to penalise the bidder up to 10 percent of the value of the contract;

(e) recommend that the bidder or contractor, its shareholders and directors, or only the shareholders and directors who acted on a fraudulent basis, be restricted by the National Treasury from obtaining business from any organ of state for a period not exceeding 10 years, after the audi alteram partem (hear the other side) rule has been applied; and

(f) forward the matter for criminal prosecution.

WITNESSES 1. …….. 2. ……	…… SIGNATURE(S) OF BIDDERS(S) DATE: …….. ADDRESS……..

SECTION 10: PROTECTION OF PERSONAL INFORMATION

1. The following terms shall bear the same meaning as contemplated in Section 1 of the Protection of Person information act, No.4 of 2013.("POPIA"):

   consent; data subject; electronic communication; information officer; operator; person; personal information; processing; record; Regulator; responsible party; special information; as well as any terms derived from these terms.

2. Transnet will process all information by the Respondent in terms of the requirements contemplated in Section 4(1) of the POPIA:

   Accountability; Processing limitation; Purpose specification; Further processing limitation; Information quality; Openness; Security safeguards and Data subject participation.

3. The Parties acknowledge and agree that, in relation to personal information that will be processed pursuant to this RFP, the Responsible party is "Transnet" and the Data subject is the "Respondent". Transnet will process personal information only with the knowledge and authorisation of the Respondent and will treat personal information which comes to its knowledge as confidential and will not disclose it, unless so required by law or subject to the exceptions contained in the POPIA.

4. Transnet reserves all the rights afforded to it by the POPIA in the processing of any of its information as contained in this RFP and the Respondent is required to comply with all prescripts as detailed in the POPIA relating to all information concerning Transnet.

5. In responding to this bid, Transnet acknowledges that it will obtain and have access to personal information of the Respondent. Transnet agrees that it shall only process the information disclosed by Respondent in their response to this bid for the purpose of evaluating and subsequent award of business and in accordance with any applicable law.

6. Transnet further agrees that in submitting any information or documentation requested in this RFP, the Respondent is consenting to the further processing of their personal information for the purpose of, but not limited to, risk assessment, assurances, contract award, contract management, auditing, legal opinions/litigations, investigations (if applicable), document storage for the legislatively required period, destruction, de-identification and publishing of personal information by Transnet and/or its authorised appointed third parties.

7. Furthermore, Transnet will not otherwise modify, amend or alter any personal data submitted by the Respondent or disclose or permit the disclosure of any personal data to any third party without the prior written consent from the Respondent. Similarly, Transnet requires the Respondent to process any personal information disclosed by Transnet in the bidding process in the same manner.

8. Transnet shall, at all times, ensure compliance with any applicable laws put in place and maintain sufficient measures, policies and systems to manage and secure against all forms of risks to any information that may be shared or accessed pursuant to this RFP (physically, through a computer or any other form of electronic communication).

9. Transnet shall notify the Respondent in writing of any unauthorised access to information, cybercrimes or suspected cybercrimes, in its knowledge and report such crimes or suspected crimes to the relevant authorities in accordance with applicable laws, after becoming aware of such crimes or suspected crime. The Respondent

must take all necessary remedial steps to mitigate the extent of the loss or compromise of personal information and to restore the integrity of the affected personal information as quickly as is possible.

10. The Respondent may, in writing, request Transnet to confirm and/or make available any personal information in its possession in relation to the Respondent and if such personal information has been accessed by third parties and the identity thereof in terms of the POPIA. The Respondent may further request that Transnet correct (excluding critical/mandatory or evaluation information), delete, destroy, withdraw consent or object to the processing of any personal information relating to the Respondent in Transnet's possession in terms of the provision of the POPIA and utilizing Form 2 of the POPIA Regulations.

11. In submitting any information or documentation requested in this RFP, the Respondent is hereby consenting to the processing of their personal information for the purpose of this RFP and further confirming that they are aware of their rights in terms of Section 5 of POPIA

Respondents are required to provide consent below:

YES		**NO**	

12. Further, the Respondent declares that they have obtained all consents pertaining to other data subject's personal information included in its submission and thereby indemnifying Transnet against any civil or criminal action, administrative fines or other penalty or loss that may arise as a result of the processing of any personal information that the Respondent submitted.

13. The Respondent declares that the personal information submitted for the purpose of this RFP is complete, accurate, not misleading, is up to date and may be updated where applicable.

Signature of Respondent's authorised representative: _____

Should a Respondent have any complaints or objections to processing of its personal information, by Transnet, the Respondent can submit a complaint to the Information Regulator on https://www.justice.gov.za/inforeg/, click on contact us, click on complaints.IR@justice.gov.za

QP ALUMINOTHERMIC RAIL WELDING PROCESS

TFR INFRASTRUCTURE – TRACK WELDERS

Faculty of Rail

Document Number:	FRSMPMEC388
Course Code:	
Version Number:	*00.00*
Classification:	Unclassified
Effective Date:	*01-07-2024*

Version Control and Approval

Document	Developed by (print name)	Date	Signature
Original	Areders Kilian	2024/07/09	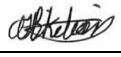
	Doctor Mabena	2024-07-11	
	Soloman Bonoko	2024-07-13	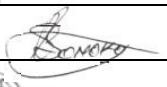
	Luyanda Sedibe	2024-07-11	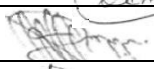
	Maduka Mothoti	2024-07-11	
	Malvyn Lewis	2024-07-11	
	Phillip Matshilli	2024-07-11	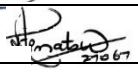
	Steven Hadebe	2024-07-12	
	Tumishi Komape	2024-07-12	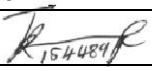
	Vincent Buthelezi	2024-07-12	
	Ndivhuwo Mulaudzi	2024-07-12	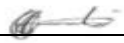

Document – approval				
Department	**Designation**	**Initial and surname**	**Date**	**Signature**
Learning Enablement and Compliance	Specialist: Curriculum Design and Development	M. Reddy		
Learning Enablement and Compliance	Senior Specialist: Curriculum (Blended Learning)	N. Mjajubana		
Learning Enablement and compliance	Head of Department	P. Maseko		
Rail Network-Technical & Capital Projects	Acting Principal Engineer	Molefi Moeketsane		16/07/2024

Important Notice: This manual contains personal information as defined in the Protection of Personal Information Act, 2013 (the "Act"). By signing, the signatory consents to the processing of her/his personal information in accordance with the requirements of the Act. Consent cannot unreasonably be withheld. The purpose for processing the personal information of the signatories contained in this document is solely for the curriculum development process.

Copyright © 2024 Transnet

This document is the property of Transnet. The contents are confidential and may not be reproduced, copied, scanned or divulged in any way or form, without prior authorization from the Head of Transnet Academy

1. PURPOSE

The purpose of this module is to enable the learner to use the Three-Piece Mould Aluminothermic Welding Process joining rails safely and correctly according to company specifications.

2. OBJECTIVE

On completion of this procedure the learner must be able to practically demonstrate his/her ability to join rails safely and correctly.

3. CRITICAL FACTORS

3.1 Quality

Ensure that all activities are performed thoroughly and according to prescribed procedures for the effective functioning of equipment and components.

3.2 Safety

Adhere to all safety instructions when performing duties on all components and equipment.

4. SAFETY EQUIPMENT

	SAFETY RULES Each welder and his/her helpers must be issued with the necessary personal protective equipment and must use it. A person, to whom personal protective equipment was issued, must keep it in a good condition.

The welder's helpers must wear the necessary personal protective equipment when welding is done.

Personal protective equipment issued to a person, must be recorded.

	SAFETY RULES The following personal protective equipment must be worn when welding, grinding, cutting, and pre- or post-heating is done:

Copyright © 2024 Transnet
This document is the property of Transnet. The contents are confidential and may not be reproduced, copied, scanned or divulged in any way or form, without prior authorization from the Head of Transnet Academy

SAFETY EQUIPMENT	WELDER	HELPER
Approved safety goggles (Light and Dark)	**X**	**X**
Welder's cap/bush hat	**X**	**X**
Leather gloves	**X**	**X**
Overhaul (Complete)	**X**	**X**
Safety boots	**X**	**X**
Leather apron	**X**	
Leggings (Spats)	**X**	**X**
Face shield	**X**	
Approved welding helmet	**X**	
Approved ear protection	**X**	**X**
High-visibility vest	**x**	**x**

5. REFERENCES

- Track Welding Manual 2012
- Pandrol Manuel Specifications

6. ABBREVIATIONS AND ACRONYMS

EWP	Exothermic Welding Process
SHERQ	Safety, Health, Environment, Risk and Quality Management
QP Process	Quick Preheat Process
FIG	Figure

7. PREREQUISITES BEFORE DOING THIS COURSE

COURSE ID	COURS CODE	COURSE NAME
50013487	EWP	Join Rails by means of the exothermic welding process
50020303	FRSMPMEC203	Perform thermit weld on rail

Copyright © 2024 Transnet

This document is the property of Transnet. The contents are confidential and may not be reproduced, copied, scanned or divulged in any way or form, without prior authorization from the Head of Transnet Academy

8. ICONS USED IN THIS LEARNING UNIT

Icons representing various kinds of information can be found throughout this learning unit. They serve as a "quick-look" reminder of their associated text.

ICON	MEANING OF ICON
	DANGER This icon indicates that the failure to obey a Safety warning WILL result in serious injury to yourself or other persons.
	CAUTION This icon indicates dangers that could cause the destruction of, or damage to components, printed circuit boards or modules.
	SELF-EVALUATION This icon indicates where a self-evaluation activity is to be done by the learner in their own time

ICON	MEANING OF ICON
	SAFETY RULES This icon indicates the Safety Rules to observe in order to prevent injury to yourself or other persons, damage to assets, as well as to increase productivity.
	WARNING This icon indicates a statement or event that indicates a possible or impending danger or problem.
	NOTE This icon indicates important additional information.

Copyright © 2024 Transnet

This document is the property of Transnet. The contents are confidential and may not be reproduced, copied, scanned or divulged in any way or form, without prior authorization from the Head of Transnet Academy

9. INTRODUCTION

The exothermic casting process is a unique process whereby two rails are cast together. Exothermic casting portions are found in most of the rail types used by TFR. The exothermic casting process is used to reduce maintenance cost and to extend the life span of rails.

10. THREE-PIECE MOULD ALUMINOTHERMIC WELDING PROCESS

General

Welding of process shall not be conducted in rainy weather and consumables shall be always kept dry.

To determine the temperature range that rails should be within prior to track welding, please refer to Annexure 16 (Sheet 3 – 5) of the Transnet Track Maintenance Manual BBB0481 Ver 2

The geometry of the rail ends to be welded (i.e. rail profile and wear) must be evaluated prior to execution of welding process.

10.1 CONSUMABLES AND ANCILLARY EQUIPMENT

The moulds, one-shot crucible and portion are usable straight out of their packaging and do not require any preparation.

- To avoid any errors in the delivery to the site, the moulds and the portion are packed in a single package, called a kit, covered with aplastic film to ensure that it is sealed
- The one-shot crucible is delivered in a cardboard box which can be covered with plastic film on request.
- When opening the kit and box containing the one-shot crucible, it is important to check that they have been kept in their original packaging, were closed, are not deformed in any way and there are no signs of moisture

Copyright © 2024 Transnet
This document is the property of Transnet. The contents are confidential and may not be reproduced, copied, scanned or divulged in any way or form, without prior authorization from the Head of Transnet Academy

The following consumables and ancillary welding consumables will be required to execute the three-piece mould welding process.

Typical QP welding process setup

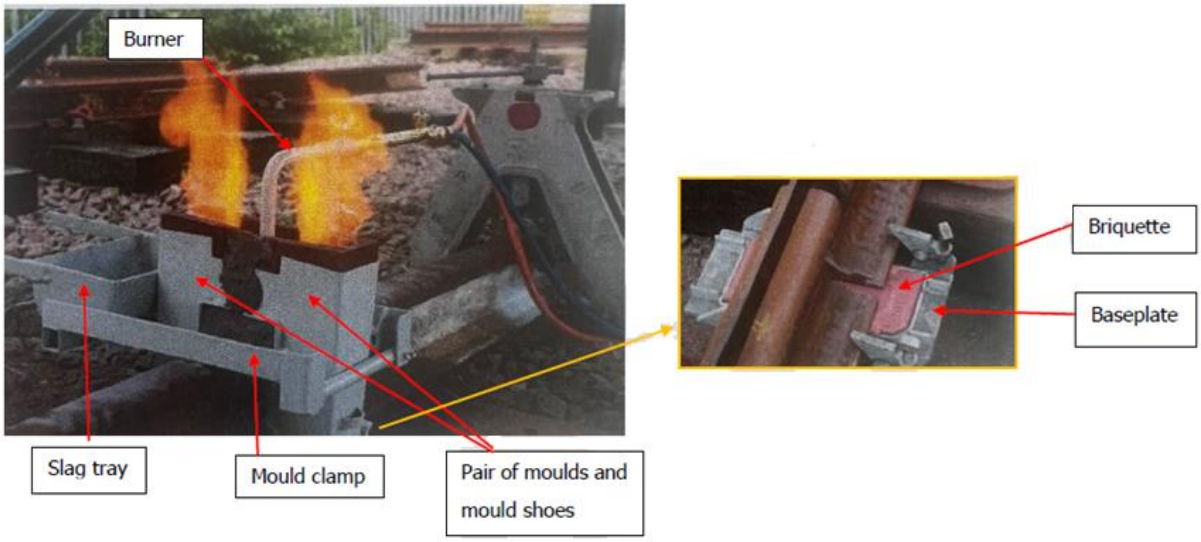

FIG. 1

10.2 LIST OF REQUIRED CONSUMABLES

- Single use (one shot) crucible
- Thermite portion
- 2 half moulds
- 1 briquette (bottom mould piece)
- 1 plug
- Luting paste

Copyright © 2024 Transnet
This document is the property of Transnet. The contents are confidential and may not be reproduced, copied, scanned or divulged in any way or form, without prior authorization from the Head of Transnet Academy

FIG. 2

10.3 THREE PIECE WELDING TOOLS

- Startwel igniter
- Plug holder
- 2 halves mould shoes
- 1 base plate
- Crucible fork
- Universal clamp
- 22 hole burner

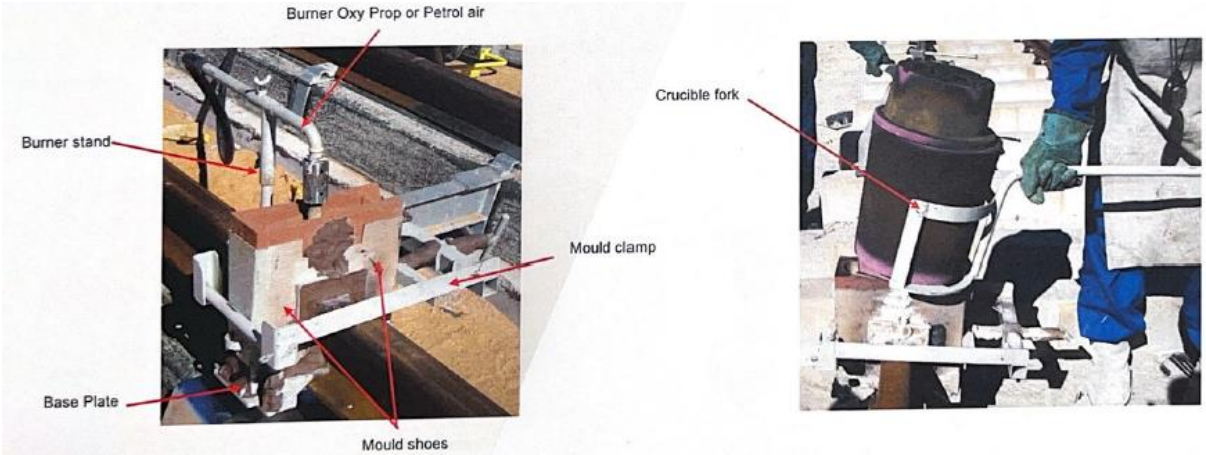

FIG. 3

Copyright © 2024 Transnet
This document is the property of Transnet. The contents are confidential and may not be reproduced, copied, scanned or divulged in any way or form, without prior authorization from the Head of Transnet Academy

STARTWEL IGNITER	
1. Electric trigger	
2. 14.4V Ion-Lithium battery	
3. Box of 10 Startwell thermal starters	
4. Battery charger	

FIG. 4

10.4 MARKINGS

10.4.1 Marking of the kit

The marking of the kit includes the information below.

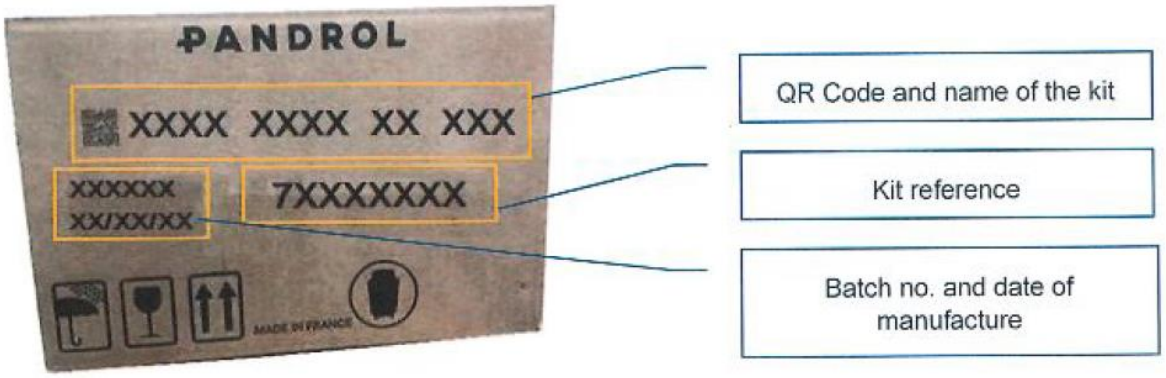

FIG. 5

Copyright © 2024 Transnet
This document is the property of Transnet. The contents are confidential and may not be reproduced, copied, scanned or divulged in any way or form, without prior authorization from the Head of Transnet Academy

10.4.2 Marking of the portion

The marking of the portion bag includes the information below.

The detachable adhesive labels are used to trace the portion.

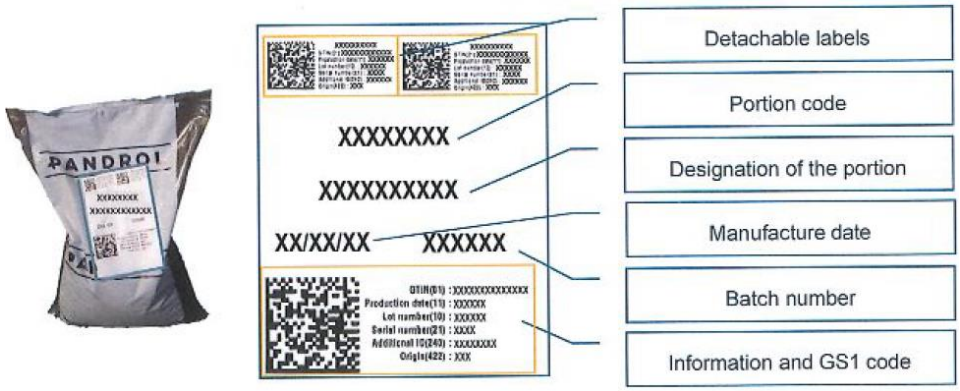

FIG. 6

10.4.3 Marking of the mould.

The markings on the mould include the information below.

Detachable adhesive labels are used to trace the moulds.

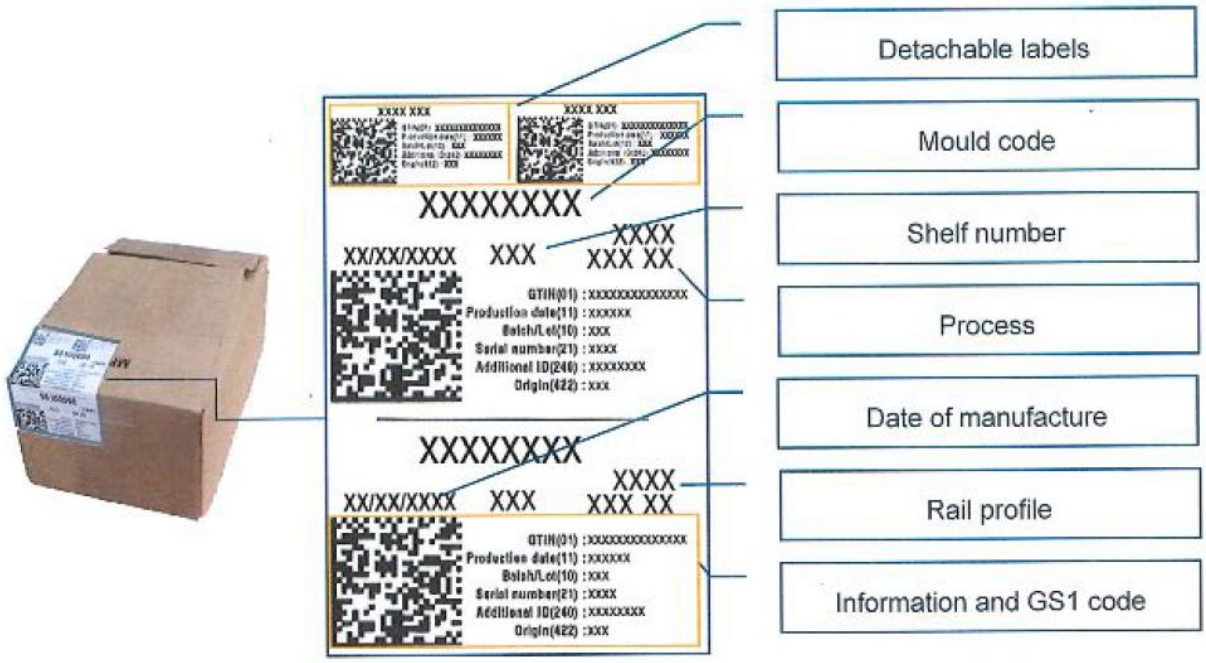

FIG. 7

Copyright © 2024 Transnet
This document is the property of Transnet. The contents are confidential and may not be reproduced, copied, scanned or divulged in any way or form, without prior authorization from the Head of Transnet Academy

10.4.4 Marking of the one-shot crucible

The marking of the one-shot crucible includes the information below.

The detachable adhesive labels are used to trace the one-shot crucible.

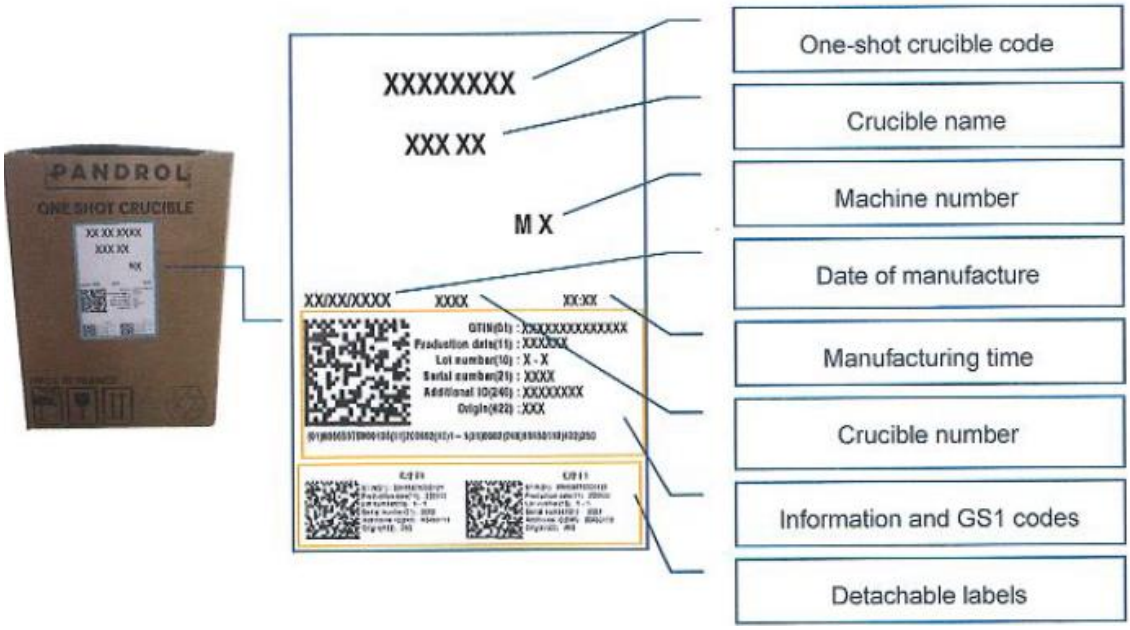

FIG. 8

	PRECAUTIONS Make sure that the welder has everything they need to perform the work:
	• Enough kits and crucibles for the number of welds to be completed. Kits corresponding to the rail profiles and the steel grades or the rails to be welded as well as the types or welds to be completed.
	• General condition of the STARTWEL" electric trigger, correct battery level and enough thermal igniters to complete the work
	• Enough full gas cylinders. fillings, hoses, pipes, pressure gauges, regulators in perfect condition, charged batteries, etc.
	• Complete set of welding tools in good condition: bottom plate, side plates. etc.
	• Control tools: straightedge. steel rule, stopwatch, mechanic's support blocks. gap gauges, etc.
	• Any welding procedures or standards in force on the network
	• Welding preparation and finishing materials: alignment A-frame, grinder, consumables (petrol, oil, grinding discs, etc.)
	• Toolbox for minor interventions.
	• Personal protection equipment.

Copyright © 2024 Transnet

This document is the property of Transnet. The contents are confidential and may not be reproduced, copied, scanned or divulged in any way or form, without prior authorization from the Head of Transnet Academy

10.5 TYPES OF EXOTHERMIC CASTING PROCESS

10.5.1 QP- Narrow gap (0 – 3-mm crown wear) Obtainable in 40, 48, 57 and 60 kg/m (consumables for step moulds and junction rails also available).

10.5.2 QP- Wide gap (0 – 3-mm crown wear) Obtainable in 40, 48, 57 and 60 kg/m (consumables for step moulds and junction rails also available).

11. PREPARATION OF THE RAIL SURFACE

11.1 Rail surfaces shall be cleaned using a steel brush, chipping hammer and waste before jumper cables are fitted to ensure that rail ends are free from grease, oil, rust and foreign matter.

11.2 Bolt holes shall be eliminated.

11.3 Grinding shall be done on the rail ends to remove oxides from the surface rendering a shiny metal surface after the rail gap is obtained for a distance of 50mm on both sides.

11.4 Overlaps shall be removed by grinding over a distance of at least 0.5m on either side.

11.5 Mark the required gap on the rail and use a disc cutter distance gauge to determine the clamp position for cutting.

Table 1: Gap sizes for the QP Process.

PROCESS	MAXIMUM/ MINIMUM RAIL GAP
QP Narrow gap	23- 27 mm
QP Wide gap	65- 71 mm

TABLE 1

11.6 Care should be taken to cut off the same amount of metal from both ends, to make sure that the joint is central between the fish-bolt holes.

11.7 During the cutting of the gap width, the effect of contraction and expansion (i.e. smaller or larger) must be carefully checked, as the latter may lead to a defective joint. A too big or too small cast gap will cause defects in the exothermic joint e.g. shrinkage cavity and lack of fusion. If the above- mentioned does happen, the permanent way personnel must be notified immediately to take corrective action.

Copyright © 2024 Transnet
This document is the property of Transnet. The contents are confidential and may not be reproduced, copied, scanned or divulged in any way or form, without prior authorization from the Head of Transnet Academy

12. RAIL ALIGNMENT

12.1 Use a rail aligner or steel wedges to lift the rail ends after the rail pads have been removed.

12.2 Use steel plates between sleepers and steel wedges under the rail flange to lift the rail ends after the rubber sheets have been removed. Special care must be taken when aligning rails with turnouts due to the difficulty thereof.

12.3 Use a 1m straight-edge and two 1mm shims to set up the rails to the correct height.

12.4 Measure the gap at the rail head and rail foot to ensure it is consistent with the chosen gap size (narrow or wide gap).

12.5 Place the straight-edge on its side, centrally across the gap, with the shims precisely the same distance from the ends of the straight-edge. Lift the rails by means of the wedges till the rail ends at the gap just touch the edge of the straight edge.

12.6 Hold the straight-edge with its measuring edge centrally against the running side of the crown and base to make sure that the two rails are in line.

12.7 After the joint has been set up, the rails must be checked again to make sure that the alignment is still correct.

12.8 After grinding, the welder must check the joint that has been cast for the correct alignment. If necessary, the setting-up height for the following cast joints must be adapted accordingly. (The shims underneath the straight edge must be adjusted.)

13. FITTING OF THE MOULDS

Moulds must be sand to match the rail profile and the underside of the briquette must be used to sand the bottom of the moulds to align with the rail foot.

FIG 9

Copyright © 2024 Transnet
This document is the property of Transnet. The contents are confidential and may not be reproduced, copied, scanned or divulged in any way or form, without prior authorization from the Head of Transnet Academy

13.1 FITTING THE BRIQUETTE

FIG. 10

13.1.1 The briquette must be cleaned and checked for damage and/or cracks. Place the briquette into the base plate.

13.1.2 In the recesses/crevice on either side of the briquette apply a seam of luting paste by hand, add paste to be flush with the plate surface. Be careful not to put luting paste on the top of the briquette.

13.1.3 Hook and clip the briquette base plate assembly on either side of the mould shoes, verifying that the base plate is perfectly centred in the gap. Then tighten the nuts of the base plate by hand.

13.2 FITTING THE HALF MOULDS

13.2.1 Sand the mould halves so that they match the profile of the rail to be welded. Each half mould should be fitted into its mould shoe.

13.2.2 The first half mould in its shoe must be placed in the middle and vertically over the gap.

13.2.3 The second half mould shoe should be placed adjacent to the first one.

13.2.4 Fit the mould clamp to secure mould halves together.

13.25 Final adjustments should be made such that the two half moulds are perfectly centred vertically and horizontally.

13.2.6 Using the bottom of the briquette (bottom mould piece), sand the bottom of the mould halves flush with the foot of the rail.

Copyright © 2024 Transnet
This document is the property of Transnet. The contents are confidential and may not be reproduced, copied, scanned or divulged in any way or form, without prior authorization from the Head of Transnet Academy

13.3 FITTING THE PREHEATING CLAMP

FIG. 11

13.3.1 Fit the universal mounting clamp to the rail crown at the correct distance from rail end, as measured with the universal gap gauge.

13.1.2 Position the universal handle and clamp on the rail with the setting gauge before clamping.

13.3.3 Place the burner holder in the universal mounting clamp, centrally over the gap, and set the clamp to the correct height of 50 mm above the rail crown.

13.3.4 The burner holder and burner are now removed as a unit.

13.3.5 The arm of the mounting clamp must be placed in such a way that the screw is in the middle on the shoe. The clamp screws must only be tightened by hand.

13.3.6 Ensure that there are no foreign materials inside the moulds.

13.3.7 When welding rails with a difference in wear, ensure that the moulds are perpendicular to the rails by loosening the mould clamp, straightening the moulds, then tightening the mould clamp

13.3.8 It must be ensured that the pouring plug fits properly into the moulds before preheating may take place, especially when worn or new rails are welded.

13.3.9 Paper cards that are supplied with the moulds, must be fitted into the cavities between the moulds and the running surface of the rail, when casting worn rails. After sealing, the cards must be 4mm away from the rail ends.

13.4 LUTING THE MOULDS

13.4.1 Lay a bead of paste evenly by hand around the entire perimeter, at the parting line of the half moulds and briquette.

13.4.2 .Level the paste carefully by hand.

Copyright © 2024 Transnet
This document is the property of Transnet. The contents are confidential and may not be reproduced, copied, scanned or divulged in any way or form, without prior authorization from the Head of Transnet Academy

13.4.3 After luting, assemble the slag tray and seal the part between the tray and mould.

FIG. 12

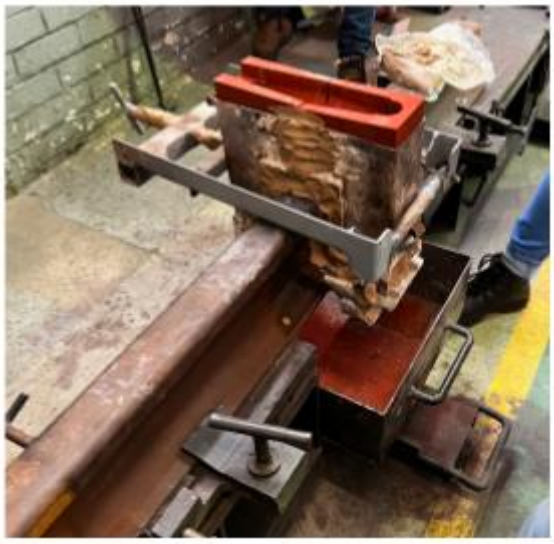

FIG.13

Copyright © 2024 Transnet
This document is the property of Transnet. The contents are confidential and may not be reproduced, copied, scanned or divulged in any way or form, without prior authorization from the Head of Transnet Academy

14. PREHEATING

Preheating the joint is necessary to remove moisture in the moulds and sealing sand and to also heat the rail end to the correct temperature which will ensure proper fusion of the rail ends. Therefore, it is imperative that the preheating operation must be done correctly.

FIG.14

For the three-piece mould welding procedure, there are two types of preheating:

Table 2: Types of Preheating processes used with the QP process.

Preheating type	Pressures
Oxy-liquid petroleum Gas	Oxygen: 220kPa Propane: 80kPa
Air-Petrol	Air: 30kPa

TABLE 2

14.1 OXYGEN-LIQUID PETROLEUM GAS

1.41.1 Preparation

14.1.1.1 Before preheating, check that both LP and oxygen gas cylinders are full or contain enough gases to complete the preheating process, and make sure correct gas regulators are used on correct gas cylinders.

Copyright © 2024 Transnet

This document is the property of Transnet. The contents are confidential and may not be reproduced, copied, scanned or divulged in any way or form, without prior authorization from the Head of Transnet Academy

14.1.1.2 Verify and ensure gas cylinders are placed in an up-right and secured in a vertical position to ensure proper functioning.

14.1.1.3 Preheater must be inspected prior to ensure its operational integrity.

14.1.1.4 Evaluate the condition and proper calibration of pressure gauges by verifying alignment. Following testing of inline pressure gauge readings, periodically assess regulator markings to maintain consistent pressure levels.

14.1.1.5 Set the gas control valve to achieve a carburizing flame of 20mm length. The desired flame length should be approximate 500 mm and demonstrate a slight surplus of LP gas.

14.1.1.6 Assess the condition of hoses to ensure they meet operational standards.

14.1.1.7 Verify and ensure the cylinders are placed in upright and vertical position.

14.1.2 PREHEATING TIMES FOR THE DIFFERENT GAPS

Preheating times must be as follows:

Preheating times of different rail profiles and gap sizes.

Profile	Welding gap (23mm-27mm)	Welding gap (65mm-71mm)
SAR 40	5 minutes	6 minutes
SAR 40/48 SAR 48	6 minutes	7 minutes
SAR 57 SAR 57/60 60E1 UIC60	7 minutes	8 minutes
*Pre-heating times based on 22-hole burner which shall be used for this welding procedure		

TABLE 3

14.1.3 FITTING THE PREHEATER

14.1.3.1 Place the preheater in its holder and align the nozzle in the moulds. Position the burner and its holder onto the clamp, ensuring the burner head is correctly positioned above the gap, both vertically and centrally.

14.1.3.2 Adjust the distance between the end of the nozzle and the top of the rail:

- For welding a narrow gap, set the distance to 50mm.
- For welding a wide gap, set the distance to 70mm.

Copyright © 2024 Transnet
This document is the property of Transnet. The contents are confidential and may not be reproduced, copied, scanned or divulged in any way or form, without prior authorization from the Head of Transnet Academy

14.1.4 IGNITING THE PREHEATER

14.1.4.1 Verify and ensure that the valves on the preheater's shank are closed.

14.1.4.2 Open both the petroleum and oxygen cylinders and adjust the petroleum pressure to 80 KPA using the regulator on the petroleum cylinder, then set the oxygen pressure to 220 KPA using the regulator on the oxygen cylinder.

14.1.4.3 Gently open the petroleum valve on the preheater's shank and ignite the preheater.

14.1.4.4 Gradually increase the flow of petroleum and oxygen gas until a flame is visible.

14.1.4.5 Continue increasing the petroleum gas flow until the valve is fully open.

14.1.4.6 Adjust the oxygen valve until the flame achieves a cone length of 27mm. Fine-tune the flame by reducing the oxygen flow until it almost reaches a popping point. Ensure the gas control valve is configured to produce a carburizing flame resulting in a 20mm cone.

14.1.4.7 Place the preheater into its holder and slowly close the oxygen valve until a popping sound is heard.

14.1.4.8 Open the oxygen valve half a turn or until the popping sound stops to establish a neutral flame.

14.1.4.9 Start the stopwatch and monitor your preheating times to ensure the desired temperature is reached. (See Table 3).

14.1.4.10 Throughout the preheating process, observe the flames from the risers to ensure they are 500mm long and have a slight excess of LP gas.

14.1.4.11 Monitor the pressures during preheating and adjust if necessary.

14.1.4.12 Place the plug on top of the mould, positioning the upper side toward the flame, taking care not to obstruct the vents.

14.1.4.13 Check the pressures during preheating and adjust if necessary.

14.1.4.14 After preheating, the burner must be removed, and the pouring plug positioned in the mould. Swung the crucible into the correct position over the pouring plug.

14.2 AIR PETROL PREHEATING

14.2.1 Preparation

14.2.1.1 Verify the quality and quantity of oil as per the manufacturer’s manual. Additionally, check the tension of the belt.

14.2.1.2 Inspect and ensure the preheater is in satisfactory condition.

14.2.1.3 Inspect the air and petrol hoses connecting the tank to the supercharger to confirm they are in good condition.

14.2.1.4 Adjust the air pressure to 0.30 bar(30kPa) as indicated on the pressure gauge.

Copyright © 2024 Transnet
This document is the property of Transnet. The contents are confidential and may not be reproduced, copied, scanned or divulged in any way or form, without prior authorization from the Head of Transnet Academy

14.2.2 Petrol Air Preheating times for the different gaps

Preheating times must be as follows:

Profile	Welding gap (23mm-27mm)	Welding gap (65mm-71mm)
SAR 40 SAR 40/48 SAR 48	7 minutes	8 minutes
SAR 57 SAR 57/60 60E1 UIC60	8 minutes	9 minutes

TABLE 4

14.2.3 Fitting Burner

14.2.3.1 Position the burner and place it in the centre to align it with the moulds.

14.2.3.2 Align the burner nozzle centrally within the pouring basin of the moulds, ensuring alignment with the middle of the gap and the central axis of the rails.

14.2.3.3 Exercise caution to prevent damage to the interior of the moulds with the nozzle to avoid sand going inside the mould.

14.2.4 Burner ignition

14.2.4.1 Position the burner slightly bent in the pouring basin of the mould.

14.2.4.2 Start the unit, ensuring the engine is operating at maximum speed according to the manufacturer's settings.

14.2.4.3 Adjust the air leakage valve until the pressure gauge shows a reading of 0.2 bar (20 kPa).

14.2.4.4 Start to open the fuel control valve by turning it once.

14.2.4.5 Apply heat to the burner heater by using a lighter until the adjustment process is complete.

14.2.4.6 Gradually open the fuel valve until the burner ignites and start positioning the burner evenly within the mould.

14.2.4.7 Close the air leakage valve until the pressure gauge reads 0.3 bar (30 kPa) and slowly close the fuel control valve until achieving a clean combustion.

14.2.4.8 Adjust the petrol-air adjustment elements of the preheater to produce blue flames at the riser outlet and yellow flames at the mould outlet, with lengths ranging from 100 to 150mm.

Copyright © 2024 Transnet
This document is the property of Transnet. The contents are confidential and may not be reproduced, copied, scanned or divulged in any way or form, without prior authorization from the Head of Transnet Academy

14.2.4.9 Ensure monitoring and adjustment of pressures during preheating and place the plug on top of the mould, ensuring its upper side faces the flame to avoid blocking vents.

14.2.4.10 Adjust the gauge by closing the air leakage valve so that the gauge shows a pressure of 0,3 bar (30 kPa).

14.2.4.11 Gradually close the fuel control valve until a clean combustion is obtained and make sure that the heater is always on.

14.2.4.12 Adjust the various petrol air adjustment elements of the preheater, to obtain blue and yellow flames at the outlet of the risers and mould that are about 100mm to 150mm.

14.2.4.13 Place the plug on the top of the mould, with the upper side against the flame (be careful not to block the vents as a result)

14.3 Glazing of the mould

Glazing shall be conducted prior to casting regardless of preheating method used.

Glazing of the moulds is a process of preheating the interior surface of the moulds to ensure the following:

- Glazing helps to ensure that rail ends, and mould reach the required temperature for a successful reaction leading to a durable weld mould.
- Glazing promotes a smooth and uniform flow of molten metal to achieve a consistent and complete fill of the joint.
- Glazing helps eliminate/remove any moisture, luting sand and dirt present on the mould surface.

15. CASTING PROCESS

15.1 POSITIONING AND POURING OF CRUCIBLE

15.1.1 Inspect crucible for damage and empty out and particle fragments.

15.1.2 Load the crucible with the thermite portion and ensure that the portion mixture is level in the crucible.

15.1.3 Place the crucible close to the rail being welded.

15.1.5 When using the Startwel starter and a filtering lid, remove the sand seal and insert the Startwel.

Copyright © 2024 Transnet
This document is the property of Transnet. The contents are confidential and may not be reproduced, copied, scanned or divulged in any way or form, without prior authorization from the Head of Transnet Academy

15.1.6 Use fork to remove the crucible and place the plug in its housing using the plug holder. Press the plug sightly down. Ensure that the plug is correctly positioned and do not waste time between pre-heating and plug installation.

15.1.7 Place the crucible onto the mould and start with the ignition process.

15.2 IGNITION INSTRUCTIONS

15.2.1 Maximum time between the end of pre-heating and ignition should not exceed 1min. The process makes use of the Startwel igniter system.

FIG. 15

15.2.3 With the filtering lid the starter lid is pre-installed, remove the pin before placing and holding the electric trigger on the stater terminals for 3 seconds. For the pre-fitted started lid, only remove the pin for ignition.

15.2.4 Upon successful ignition a light will be seen from the translucent seal. About 15 - 30 seconds after combustion, the molten metal will automatically flow onto the pouring plug into the mould. Remove the crucible 1min after the pouring has completed.

FIG 16

Copyright © 2024 Transnet
This document is the property of Transnet. The contents are confidential and may not be reproduced, copied, scanned or divulged in any way or form, without prior authorization from the Head of Transnet Academy

16. SOLIDIFYING PROCESS AND STRIPPING OF WELD

16.1 The flange and web section solidifies first (thin parts).

16.2 The excess of metal on top of the crown. The crown and the risers will solidify last, because of the thicker metal and because solidification takes place from the outside to the inside of the joint.

16.3 All impurities will be trapped on top of the excess metal and risers because these areas solidify last.

16.4 Break off the solidified slag at the outflow between the mould and the slag tray 3 minutes after the pouring process has completed. Remove the slag tray with fork. (Failing to remove the slag in the allocated time will result in the mould to be torn off when removing the slag trays, creating the risk of leakage.)

16.5 Remove mould shoes and bottom plate 3 min after pouring for a narrow gap and 8 min for a wide gap (see Table 5) for a comprehensive summary of welding times).

16.6 The stripping process needs to commence 6 min after pouring for a narrow gap and 9 min for a wide gap.

16.7 Firstly, remove the luting paste on both sides of the mould, then tilt and remove the upper portions of the mould.

16.8 Clean the rail crown with a brush before shearing.

Copyright © 2024 Transnet
This document is the property of Transnet. The contents are confidential and may not be reproduced, copied, scanned or divulged in any way or form, without prior authorization from the Head of Transnet Academy

PRE-HEATING:	NARROW GAP 23 -27 mm Gap	WIDE GAP 65 - 71 mm Gap
LP-Gas:		
SAR 40	5 minutes	6 minutes
SAR 40/48 **SAR 48**	6 minutes	7 minutes
SAR 57 **SAR 57/ 60** **60E1** **UIC60**	7 minutes	8 minutes
Petrol:		
SAR 40 **SAR 40/48** **SAR 48**	7 minutes	8 minutes
SAR 57 **SAR 57/60** **60E1** **UIC60**	8 minutes	9 minutes
CASTING PROCESS:		
Reaction time	15 – 30 seconds	15 – 30 seconds
Stripping Process:		
Mould shoe removal	3 minutes after pouring	8 minutes after pouring
Stripping	6 minutes after pouring	9 minutes after pouring
Shearing Process:		
	6 minutes after pouring	9 and a half minutes after pouring
Wedge removal	15 minutes after pouring	15 minutes after pouring
Cooling caliper **For head hardened rails (R350LHT)**	8 minutes	8 minutes

TABLE 5

18. SHEARING OF EXOTHERMIC WELD JOINT

18.1 All loose sand on the rail crown must be removed before shearing of the cast joint commences.

18.2 The excess metal must be removed with a hydraulic shearing machine immediately after the top part of the mould has been removed. Care should be taken not to disturb the mould. A damaged mould will lead to a run-out or quick cooling off, which could result in a defective weld, e.g. shrinkage cavities.

Copyright © 2024 Transnet
This document is the property of Transnet. The contents are confidential and may not be reproduced, copied, scanned or divulged in any way or form, without prior authorization from the Head of Transnet Academy

NOTE

18.3 Excess metal must be sheared away, using an approved double-blade hydraulic shearing machine. Shearing should only start at six's minutes after pouring for narrow gap and nine and a half minutes for wide gap.

CAUTION

18.4 Care must be taken not to tear the cast metal when shearing the joint before the metal has solidified completely. Sufficient time must be allowed before shearing, as this will enable hot metal to solidify.

18.5 Bend risers downwards by means of two tommy bars - do not use a hammer as the vibrations caused by the impact of the hammer will affect the cooling process of the weld, leading to a defect weld, e.g. shrinkage cavities.

18.6 During shearing ensure that the supporting blocks added during alignment are still in place to support the rails during the shearing process.

18.7 Remove the wedges 15 min after pouring.

18.8 For HH rails (R350LHT), place a cooling calliper directly over the joint after shearing and leave for at least 8 min.

18.9 Remove the risers by cutting the bottom of the riser with a grinder. Avoid breaking the risers with a chisel when hot.

19. ROUGH GRINDING AND CORRECTIONS

After the cast joint has been sheared, rough grinding can be done to remove excess material. The track can be opened to track while awaiting final grinding.

19.1 The rail head gauge side of the rail should be ground using a rough grinding machine.

19.2 At least 1mm of cast metal must remain after rough grinding the joint, to allow further contraction during cooling. This will ensure that the joint is not hollow after cooling.

19.3 After the cast joint has been rough-ground and has cooled down to 300 °C, a train may be allowed to proceed over it at a maximum speed of 30 km/h, provided that steel filler plates of suitable thickness (150mm x150mm x 10mm) have been fitted between the rail and the first sleeper on both sides of the welded joint, and that the rail has been fastened to the third sleeper on both sides.

19.4 As soon as the train has passed and if the temperature still exceeds 200°C, the sleepers must be loosened again so that the rail can move while the cast joint contracts. Check and record the rail temperature for future reference.

Copyright © 2024 Transnet

This document is the property of Transnet. The contents are confidential and may not be reproduced, copied, scanned or divulged in any way or form, without prior authorization from the Head of Transnet Academy

19.5 The steel filler plates and wedges must be removed after the cast joint has cooled down to ambient temperature. The HDPE pads must be replaced, and all the sleepers fastened and tamped afterwards.

19.6 The joint must be rejected when it has cooled down to ambient temperature and the vertical alignment fault is more than 1 mm based on a 1m straight-edge measurement.

19.7 A maximum of 1mm may be ground away from the rail crown.

19.8 Cast joints which do not comply with the specified standards, must be cut out.

19.9 The starting and end temperature, as well as the portion number must be written with chalk on the rib on the field side of the rail at each joint.

20. FINAL FINISHING

20.1 STANDARDS AND TOLERANCES

20.1.1 Final grinding and cleaning of all exothermic joints must be done within 24 hours after casting the joint.

20.1.2 The joint must be sound, without cracks, slag, sand inclusions, undercuts, porosity, or any foreign matter. A mirror must be used for inspection purposes.

20.2 VERTICAL ALIGNMENT

20.2.1 The flange of rail and crown must be vertically aligned to a tolerance of 1 mm.

20.3 SQUARE ALIGNMENT

20.3.1 The edge of the collar on one side of the flange must be horizontally aligned to the edge of the collar on the opposite side of the flange to a tolerance of 1mm.

20.4 HALVE-MOULD ALIGNMENT

20.4.1 The two mould halves must be aligned under the flange to a tolerance of 3mm.

20.4.2 A 0.2mm feeler gauge may not enter anywhere between the rail crown and a 1m straightedge placed longitudinally and centrally over the joint.

20.4.3 A 0.2mm feeler gauge may not enter anywhere between the rail crown and a 1m straight-edge placed longitudinally on the gauge side of the crown and centrally over the joint. (The same applies on the field side in case of future transposing.)

Copyright © 2024 Transnet
This document is the property of Transnet. The contents are confidential and may not be reproduced, copied, scanned or divulged in any way or form, without prior authorization from the Head of Transnet Academy

21 MARKING OF WELDED JOINTS

21.1 **Each exothermic weld must be marked with stencils of about 8 mm on the field side of the rail crown in proximity of the joint (see Figure 1), indicating the following:**

21.1.1 Company name (not applicable to Transnet Freight Rail), e.g. M = Metrorail, PR =Transnet Capital Projects (previously Protekon), C = Contractor, etc,

21.1.2 The Depot will allocate a code letter (except C, I, L, O, M, P and R) to the Track Welder (E.g. D).

25.1.3 The day, month and last two digits of the year. (DDMMYY).

21.1.4 Joint number e.g. Start with number 1, 2, etc, at the beginning of each workday.

21.1.5 Joints shall be numbered for control purposes. These numbers shall start at one at the beginning of every financial year.

21.1.6 The Track Welder shall allocate a number to every joint and this number shall then be written on the rail web and stamped on the joint for record purposes.

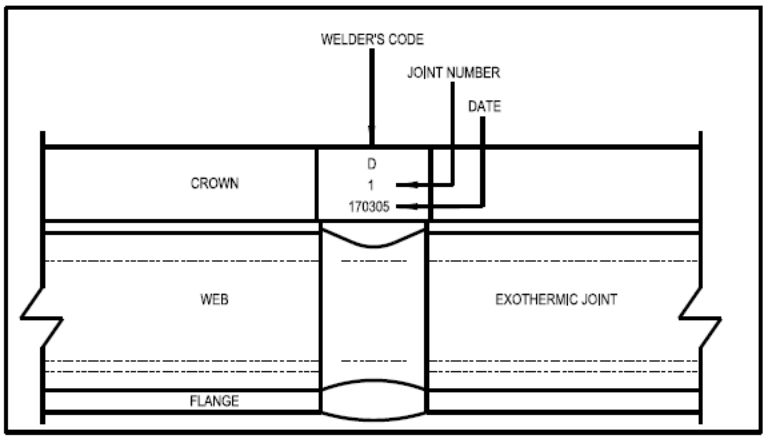

Figure 17: Example of joint marking

22. INSPECTION OF EXOTHERMIC JOINTS

22.1 A Technical Supervisor must inspect the exothermic joint visually after completion.

22.2 All exothermic joints must be tested by means of the non-destructive testing methods (x-ray or ultrasonic testing), and defective joints must be replaced.

Copyright © 2024 Transnet
This document is the property of Transnet. The contents are confidential and may not be reproduced, copied, scanned or divulged in any way or form, without prior authorization from the Head of Transnet Academy

	CHECKPOINT 1 • Study all the content of this Standard Maintenance Procedure until you are conversant with the content thereof.

	CHECKPOINT 2 • Practise doing thermit welds correctly and safely until you can do so without referring to the contents of this Standard Maintenance Procedure.

	NOTE • Practise until you feel that you are competent. When you feel that you are competent, ask your Facilitator/Welding Supervisor for the practical assessment.

Copyright © 2024 Transnet

This document is the property of Transnet. The contents are confidential and may not be reproduced, copied, scanned or divulged in any way or form, without prior authorization from the Head of Transnet Academy

PRACTICAL EVALUATION				
ITEMS TO EVALUATE		**Competent**	**Not Yet Competent**	**Remarks**
1.	Correct personal safety equipment used			
2.	Preparation of the rail surface			
3.	Rail alignment			
4.	Fitting of the moulds			
5.	Preheating			
6.	Casting process			
7.	Solidifying process and stripping of weld			
8.	Shearing of exothermic weld joint			
9.	Final finishing			
10.	Marking of welded joints			
11.	Inspection of exothermic joints			

Copyright © 2024 Transnet
This document is the property of Transnet. The contents are confidential and may not be reproduced, copied, scanned or divulged in any way or form, without prior authorization from the Head of Transnet Academy

DOCUMENT No.	FRSMPMEC388
COURSE CODE:	xxx
TITLE:	QP ALUMINOTHERMIC RAIL WELDING PROCESS.

CANDIDATE:

NAME: _____ SAP No.: _____

I, the abovementioned, request to be assessed.

_____ _____

SIGNATURE DATE

FACILITATOR/WELDING SUPERVISOR:

NAME: _____ REGISTRATION No.: _____

_____ _____

SIGNATURE DATE

ASSESSMENT RESULT (Please mark the appropriate box)

1ST ATTEMPT	COMPETENT	☐	NOT YET COMPETENT	☐
2NDATTEMPT	COMPETENT	☐	NOT YET COMPETENT	☐

FEEDBACK:

_____

_____

_____

_____ _____

ASSESSOR (Signature) LEARNER (Signature

_____ _____

DATE DATE

This document is the property of Transnet. The contents are confidential and may not be reproduced, copied, scanned or divulged in any way or form, without prior authorization from the Head of Transnet Academy

DOCUMENT No.	FRSMPMEC388
COURSE CODE:	xxx
TITLE:	QP ALUMINOTHERMIC RAIL WELDING PROCESS.

CANDIDATE:

NAME: _____ SAP No.: _____

I, the abovementioned, request to be assessed.

_____ _____

SIGNATURE DATE

FACILITATOR/WELDING SUPERVISOR

NAME: _____ REGISTRATION No.: _____

_____ _____

SIGNATURE DATE

ASSESSMENT RESULT (Please mark the appropriate box)

1ST ATTEMPT	COMPETENT	☐	NOT YET COMPETENT	☐
2ND ATTEMPT	COMPETENT	☐	NOT YET COMPETENT	☐

FEEDBACK:

_____

_____

_____

_____ _____

ASSESSOR (Signature) LEARNER (Signature

_____ _____

DATE DATE

Copyright © 2023 Transnet Version: 00 31
This document is the property of Transnet. The contents are confidential and may not be reproduced, copied, scanned or divulged in any way or form, without prior authorization from the Head of Transnet Academy

TRANSNET
freight rail

A Division of Transnet SOC Limited

INFRASTRUCTURE ENGINEERING

MANUAL FOR TRACK MAINTENANCE

Approved	Principal Engineer Perway - Rail Network	M. A. Marutla	
Approved:	Principal Engineer Technology Management	K. Mistry	
Approved:	Chief Engineer Technical – Rail Network	J.H.P. van Aardt	
Authorised:	General Manager Rail Network	C.Q. Mtetwa	

Date: June 2012

Circulation Restricted To:

Transnet Freight Rail

Transnet and Relevant Third Parties

Unrestricted

© This document as a whole is protected by copyright. The information herein is the sole property of Transnet SOC Ltd. It may not be used, disclosed or reproduced in part or in whole in any manner whatsoever, except with the written permission of and in a manner permitted by the proprietors.

CONTENTS

CHAPTER 1

THE PURPOSE OF THIS MANUAL, IT'S APPLICATION AND ASSOCIATED PUBLICATIONS TO BE READ IN CONJUNCTION HEREWITH

1.0	Purpose of the manual	12
1.1	Application of the manual	12
1.2	Associated publications	12

CHAPTER 2

THE GOAL AND OBJECTIVES FOR TRACK MAINTENANCE. SPECIFIC AND GENERAL RESPONSIBILITIES OF TRACK MAINTENANCE PERSONNEL WITH RESPECT TO THE TRACK INFRASTRUCTURE

2.0	The goal for track maintenance	13
2.1	The objectives for track maintenance	13
2.2	Responsibilities of the Chief Engineer (Infrastructure-Maintenance),	14
2.3	The Infrastructure Manager,	14
2.4	The Depot Engineering Manager,	14
2.5	The Maintenance Manager (Track) and the Track Inspector (Maintenance Management)	14
2.6	Track personnel in charge of heavy on-track machines,	15
2.7	The Production Manager (Track),	15
2.8	The Engineering Technician,	16
2.9	The Track Master,	16
2.10	The Track Welder,	16
2.11	The Technical Supervisor (Welding), and the Track Inspector (Production); and	17
2.12	of the Track Manager and the Technical Manager (Welding) in the central office.	17
2.13	The Track Superintendent Welding	17
2.14	The Track Inspector Training And Safety (Act 85)	18
2.15	The Track Inspector Private Sidings	18
2.16	The Track Inspector Contracts	18
2.17	General responsibilities of track personnel	19
2.17.1	Protection of trains and safeguarding of employees	19
2.17.2	Detonators	19
2.17.3	Safety precautions	20
2.17.4	Safety precautions in station yards	21
2.17.5	Call-outs	21
2.17.6	Breaking of the line	21
2.17.7	Breaking of track circuits	21
2.17.8	Accidents and obstructions	21
2.17.9	Reporting of track defects	23
2.17.10	Goods found next to the track	24
2.17.11	Taking over a length	24
2.17.12	Possession of a reliable time measurement instrument	24
2.17.13	Communication	24
2.17.14	Absence from section	24
2.17.15	Dangerous substances	24

CHAPTER 3

EARTHWORKS, THE FORMATION, DRAINAGE, TUNNELS, BRIDGES, CULVERTS AND TEMPORARY TRACK SUPPORTS

3.0	Inspection	25
3.1	Earthworks	25
3.2	The formation	25
3.3	Drainage	25
3.4	Tunnels	25
3.5	Bridges and culverts	25
3.6	Temporary track supports	26

CHAPTER 4

INSPECTIONS AND TRACK GEOMETRY

4.0	Inspections general	30
4.0.1	Patrolling	30
4.0.2	Trolley inspections	30
4.0.3	Footplate inspections	31
4.0.4	Inspections by track measuring car	31
4.0.5	Inspection of structures	32
4.0.6	Inspection of earthworks, the formation and associated drainage	32
4.0.7	Ultrasonic and X-ray inspections	32
4.0.8	Inspection of perway material	32
4.0.9	Inspection of sets (turnouts, slips and diamond crossings)	32
4.0.10	Inspection of signs, level crossings and fences	32
4.0.11	Inspection of clearances	33
4.1	Track geometry	33
4.1.1	Standards	33
4.1.2	Transition curves	35
4.1.3	Gauge	36
4.1.4	Cant	36
4.1.5	Gradients	
37		
4.1.6	Sleeper spacing and permissible deviations	
37 4.1.7	Sleeper and rail fastenings	37
4.1.8	Universal sleepers and bolts replacement on turnouts	38

CHAPTER 5

TURNOUTS, SLIPS AND DIAMOND CROSSINGS

5.0	Introduction	40
5.1	General	40
5.2	Maintenance of stock and points rails	41
5.2.1	General	41
5.2.2	Hinged points blades	42
5.2.3	Flexible type points blades and undercut stock rails	42
5.3	Maintenance of frogs	43
5.4	Points locks and keys	44
5.5	Bridle-locked points	44
5.6	Points tumblers	44

5.7 Spiked points 45

CHAPTER 6

RAILS

6.0	The transport and handling of rails	46
6.1	Bending and straightening of rails	46
6.2	Rail usage	46
6.3	Junction rails	47
6.4.1	Closure rails	47
6.5	Check-railing	48
6.6	Laying rails in track	48
6.6.1	General	48
6.6.2	Jointed track (joint plated rails)	49
6.7	Continuous rails	49
6.7.1	General	49
6.7.2	Track structure for running lines	50
6.7.3	Track structure for yard tracks	50
6.7.4	Laying continuous rails	
	- within the destressing range	50
6.7.5	- outside the destressing range	51
6.7.6	- on new formation	51
6.7.7	- on unballasted bridges	51
6.7.8	Slacks, kinks and kick-outs	52
6.7.9	Continuous rails on sharp curves	53
6.8	Rail joints	53
6.8.1	Joint plated joints	53
6.8.2	Insulating (block) joints	54
6.8.3	Splice joints	54
6.9	Rail creep	55
6.10	Rail destressing	55
6.11	Exothermic welding of rail joints	56
6.12	Repair of battered and mismatched rail ends and welded joints	56
6.13	Repair of wheel spin damage	57
6.14	Broken and defective rails	57
6.15	Rail wear	58
6.16	Rail lubricators	58
6.17	Stop blocks	60
6.18	Derailing devices	60

CHAPTER 7

SLEEPERS AND BALLAST

7.0	Sleepers and fastenings	61
7.0.1	General	61
7.0.2	Inspections	61
7.0.3	Wood sleepers	61
7.0.4	Steel sleepers	62
7.0.5	Concrete sleepers	63
7.0.6	Resleepering by hand under continuous rail	64
7.1	Ballast	64
7.1.1	General	64
7.1.2	Ballast cleaning	64
7.1.3	- by hand	65
7.1.4	- by machine	65
7.1.5	Ballast tamping	65

CHAPTER 8

CLEARANCES AND DIMENSIONS

8.0	Minimum clearances between track and structures	66
8.1	Marking of fouling points	67
8.2	Electrified sections : height of contact wire	67
8.3	Track centres	67
8.4	Clearance marks	68
8.5	Useful dimensions	68

CHAPTER 9

ASSOCIATED WORKS

9.0	Track signs	70
9.1	Grade and kilometre posts	70
9.2	Permanent speed restriction boards	70
9.3	Temporary track signs	71
9.4	Distance and warning boards	72
9.5	Warning signs at level crossings	72
9.6	Level crossings	72
9.7	Service Roads	73
9.8	Fencing	74
9.9	Cattle guards	74
9.10	Beacons	74
9.11	Underground services	74
9.12	Communication routes	75
9.13	Communications	75
9.14	Blasting	75
9.15	Fires	75
9.16	Firebreaks	76
9.17	Plants on or near Transnet or PRASA property	76
9.18	Eradication of noxious weeds	77
9.19	Rodents	77

CHAPTER 10

TRACK MATERIAL, TOOLS AND EQUIPMENT

10.0	Safe keeping	78
10.1	Storage and care of material	78
10.2	Stocks	79
10.3	Released track material	79
10.3.1	Rails	79
10.3.2	Wood sleepers	80
10.3.3	Steel sleepers	80
10.4	Track gauges	80

CHAPTER 11

TROLLEYS AND ON-TRACK MACHINES

11.0	Non self-propelled trolleys	81
11.1	Self-propelled trolleys	82
11.2	Operating of road-rail vehicles	83
11.3	Rail transporters	84
11.4	On-track machines	85

CHAPTER 12

SIGNALS

12.0	Introduction	87
12.1	Protection	87
12.2	General	87
12.3	Insulating fastenings	87
12.4	Signalling equipment	87

CHAPTER 13

ELECTRICAL

13.0	Danger of coming into contact with electrical equipment	88
13.1	Rescue and treatment of persons suffering from electric shock	88
13.2	Work under "dead" conditions	88
13.3	Work near “live” electrical equipment and the precautions to be taken	89
13.4	Track/mast alignment	89
13.5	Traction return rail circuit	89
13.6	Prevention of stray return currents	91

CHAPTER 14

TRAIN OPERATING

14.0	Introduction	92
14.1	Planning	92
14.2	Irregularities / Defects	92
14.3	Communication	92

CHAPTER 15

WORK CODES

15.0	Ballast	93
15.1	Insulating joints	93
15.2	Bridges and culverts	93
15.3	Earthworks, formation and drainage	93
15.4	Civil Engineering	93
15.5	Track	93
15.6	Rails	93
15.7	Signs, level crossings and fences	93

15.8	Turnouts, slips and diamond crossings	94
15.9	Clearances	94

CHAPTER 16

DECISION MODELS/GUIDELINES

16.0	Ballast	95
16.1	Concrete sleepers	95
16.2	Track	95
16.3	Rails	95
16.4	Turnout maintenance	95

CHAPTER 17

RAIL/WHEEL INTERACTION

17.0	Introduction	96
17.1	Geometry	96
17.2	Lubrication	96
17.3	Tracking	96
17.4	Motive power and speed	97
17.5	Profiling	97

CHAPTER 18

PRIVATE SIDINGS

18.0	Background	98
18.1	Introduction	98
18.2	Definitions	98
18.3	Agreements	98
18.4	Maintenance	98
18.5	Material	98
18.6	Emergency work	99
18.7	Inspections	99
18.8	Rail wear	99
18.9	Sleepers	99

CHAPTER 19

RAIL STRESS MEASUREMENT USING THE LIFTING FRAME

19.1	Background	100
19.2	The lift frame	100
19.3	The gauge	100
19.4	Basic principle	100
19.5	Additional parts of the frame	101
19.6	The 70 mm measuring plate	101
19.7	Tables for determining the stress-free rail temperature	101
19.8	Working procedure	101
19.9	Safety	102

CHAPTER 20

DETAILED MEASUREMENT FOR SLACKS AND KICKOUT REPAIRS

CHAPTER 21

RESPONSIBILITIES AND WORK METHODS APPLICABLE TO SPECIFIC SECTIONS

CHAPTER 22

RECOMMENDED READING FOR TRACK PERSONNEL

22.0	Books	113
22.1	Conferences	113
22.2	Symposiums, lectures and courses	113

ANNEXURES

TRACK STRUCTURE

Clearances

1/1 Horizontal - 1 065mm track gauge
1/2 Vertical- 1065mm track gauge
1/3 Platforms
1/4 Truck tippler
1/5 610mm track gauge

Vehicle gauges

2/1 1 065mm track gauge
2/2 610mm track gauge

3 Classification and standards for running lines:1 065mm track gauge
4 Formation and ballast: minimum requirements
5 Sleeper spacing
6 Safety rails for bridges

Temporary track supports

7/1 Rail girders
7/2 Sleeper cribs
7/3 Bridging cribs

Fastening of bridge sleepers

8/1 Hardwood
8/2 Laminated timber
8/3 Template

Curves

9/1 Offsets
9/2 Gauge adjustment
9/3 Gauge adjustment, side wear and temporary tapered end pieces
9/4 Super elevation and maximum permissible speed

Track signs

10/1 Permanent
10/2 Temporary
10/3 Layout
10/4 Level crossings

SLEEPERS

Sleeper fastenings:

11/1 Concrete - FIST BTR
11/2 Concrete - PANDROL
11/3 Steel - E-3277
11/4 Wood - E-3131

12 Method of stacking wood sleepers
13 Unloading concrete sleepers

RAILS

Rail profiles and properties

14/1 Profiles:- 30kg, 40kg, 43kg, 48kg, 51kg
14/2 Profiles:- 57kg, 60kg, S-49, UIC-60
14/3 Profiles:- Zu-1-60, Z-S60-SAR, Zu-2-49, S-60-SAR
14/4 Properties

Rail classification

15/1 Wear gauge
15/2 Classification table
15/3 Cutting of released rails

Temperature aspects

16/1 Expansion gaps for different rail lengths and temperatures
16/2 Sections with moderate ruling temperatures
16/3 Destressing and working temperature ranges
16/4 Destressing and working temperature ranges
16/5 Destressing and working temperature ranges

Defects

17/1 Typical rail defects and fractures
17/2 Typical rail defects and fractures
17/3 Transverse fissures (G4)
17/4 Rail defects and fractures:- safety precautions to be observed.
17/5 Rails with ultrasonic detected defects.

Cutting and joints

18/1 Minimum cut distance from welded joints and minimum distances between joints

19 Drilling rails for metric P & M lubricators
20 Jumpering when traction rail is replaced

SETS

Typical turnouts

21/1 Sets of points
21/2 Crossings
21/3 Crossings with movable v-pieces

Layout of turnouts

22/1 Semi-curved hinged points blades
22/2 Fully curved flexible points blades
22/3 Trailable self-normalising points blades
22/4 Fully curved flexible points blades - cast manganese frogs
22/5 do :- railbound frogs
22/6 do :- composite points blades and railbound frogs

22/7 do :- movable v-pieces with back sliding joints

Dimensions of turnouts

23/1	48kg	: 1 067mm track gauge
23/2	48/51kg	: 1 065mm track gauge
23/3	57/60kg	: 1 065mm track gauge
23/4	30kg	: 610mm track gauge
23/5	S60/ZS60	: 1 065mm track gauge

23/6	GERMAN UIC60	: 1 065mm track gauge
23/7	48/51kg	: 1 065mm track gauge: concrete sleepers
23/8	UIC60	: 1065mm track gauge: concrete sleepers

24 Radii of turnouts from curved track

Slips and crossings:- layout and dimensions

25/1 Diamond crossings:- 1:4½, 1:6, 1:7 and 1:8
25/2 Double slips
25/3 Single slips
25/4 Double slips (VAE)

Insulating joints' positions

26/1 Turnouts and diamond crossings
26/2 Single and double slips

Tumblers

27/1 Lockable knuckle-jointed arm
27/2 Stiff counter-weight arm
27/3 Countersunk - for paved areas
27/4 Spring loaded linking mechanism

28 Cushion stop block
29 Fencing

Sleeper details

30/1 General
30/2 48kg 1:12 concrete sleepers
30/3 48kg 1:12 concrete sleepers
30/4 S60/UIC60 1:12 concrete sleepers
30/5 S60/UIC60 1:12 concrete sleepers
30/6 S60/UIC60 1:20 concrete sleepers
30/7 S60/UIC60 1:20 concrete sleepers

CHAPTER 1

THE PURPOSE OF THIS MANUAL, IT'S APPLICATION AND ASSOCIATED PUBLICATIONS TO BE READ IN CONJUNCTION HEREWITH

1.0 PURPOSE OF THE MANUAL

This manual describes the responsibilities of all track maintenance personnel and is issued for their guidance. It supersedes the Permanent Way Instructions issued in 1984 and 2000. The male gender form is used throughout this text. This gender form shall however specifically mean to include also the female gender form.

1.1 APPLICATION OF THE MANUAL

1.1.1 Track personnel who are supplied with copies of this manual must acquaint themselves with it and act in accordance with the manual in so far as it concerns them. They must ensure that their copy is updated with any amendments that may be issued from time to time.

1.1.2 Except where provision is made for the contrary, this manual must be read in conjunction with, and not in lieu of the publications listed in **clause 1.2**. The term "Heavy haul lines" refer to S-lines (See Annexure 3 Sheet 1).

1.2 ASSOCIATED PUBLICATIONS

Track personnel must be in possession of the publications listed hereunder (together with any amendments which may be issued), have knowledge of their contents and act in accordance therewith.

- Manual for Track Maintenance
- Train Working Rules
- General Appendix (parts I and II)/General Train Working Rules
- Construction Standards for Private Sidings (part B)
- Track data and curve lists
- Lists of structures, bridges and culverts, tunnels, level crossings and fouling points in relation to Track Structure gauge
- Safety Guidelines for Infrastructure
- Electrical Safety Instructions
- Latest updated section 53 'Perway Material/Price list'
- Applicable operating notices
- Manual for Managing Track Material, Tools and Equipment
- Applicable work codes and decision models/guidelines.
- Protection Manual
- Work Code for Fire Prevention
- Manual for Contingency Plan for Accidents/Derailments.
- Quick Reference for Building of Turnouts.
- Signing of Railway Crossings, chapter 7, SARTSM, Vol2
- Work Code for the Maintenance of Block joints.
- Specification for Track Welding.
- Code 29
- Mica forms (applicable forms from Index BBD5351 and BBC8266)

CHAPTER 2

THE GOAL AND PERFORMANCE OBJECTIVES FOR TRACK MAINTENANCE. SPECIFIC AND GENERAL RESPONSIBILITIES OF MAINTENANCE PERSONNEL WITH RESPECT TO THE TRACK INFRASTRUCTURE

2.0 THE GOAL FOR TRACK MAINTENANCE

The goal for track maintenance is to strive for the most economical but safe balance between resource input, track condition and required levels of operational readiness.

2.1 THE PERFORMANCE OBJECTIVES FOR TRACK MAINTENANCE

2.1.1 Track personnel must ensure that railway lines and associated works are always maintained to a standard which is safe for the passage of trains.

2.1.2 Employees must always regard the safety of the public, goods in transit and the safety and health of other employees as the first consideration.

2.1.3 Employees must not expose themselves to danger and must prevent other employees from exposing themselves and others to danger.

2.1.4 Service level agreements between Infrastructure-Maintenance, Service Execution and Service Planning must be met.

2.1.5 To continually strive for improved productivity to ensure an effectively and efficiently maintained rail network.

2.1.6 All departments involved must work together so as to ensure the long term viability of the track infrastructure and associated works. Care must always be taken to ensure that over or under maintenance of the track structure does not take place.

2.1.7 Infrastructure-Maintenance teams must have regular communication with traffic controllers each day, in order to minimise delays to trains.

2.2 RESPONSIBILITIES OF THE CHIEF ENGINEER (INFRASTRUCTURE-MAINTENANCE)

The Chief Engineer (Infrastructure-Maintenance) is responsible for

2.2.1 The long term viability of the track infrastructure and associated works.

2.2.2 Maintaining and expanding the pool of knowledge and expertise.

2.2.3 Ensuring that personnel are competent to perform their duties.

2.2.4 Formulating policy and initiating strategies to meet objectives and taking corrective action when required.

2.2.5 Performing certain services in respect of training, research and development, material, on-track machines and structures.

2.2.6 Ensuring that the requirements of applicable legislation are complied with.

2.3 RESPONSIBILITIES OF THE INFRASTRUCTURE MANAGER

The Infrastructure Manager is responsible for:

2.3.1 Determining and negotiating for required resources.

2.3.2 Improving productivity on an ongoing basis.

2.3.3 Monitoring safety and the quality of service continually and for initiating corrective actions.

2.3.4 Identifying and utilising excess capacity.

2.3.5 Ensuring that contingency planning has been done and will function smoothly if required.

2.3.6 Ensuring that Depot Engineering Managers are competent to perform their duties.

2.3.7 Ensuring that the requirements of applicable legislation are complied with.

2.4 RESPONSIBILITIES OF THE DEPOT ENGINEERING MANAGER

The Depot Engineering Manager is responsible for:

2.4.1 The safe passage of trains, the safety of the public as well as the safety and health of his personnel.

2.4.2 The quality of service and ensuring that all agreements in this regard are complied.

2.4.3 The effective management of all maintenance activities and resources.

2.4.4 Maintaining and operating reliable systems.

2.4.5 Ensuring that adequate resources are available for all aspects of track maintenance including call-out and emergency procedures.

2.4.6 Carrying out prescribed inspections.

2.4.7 Ensuring that work is properly managed and undertaken in accordance with the relevant work codes.

2.4.8 Ensuring that formal and on the job training takes place and that the requirements of applicable legislation are complied with.

2.4.9 Ensure Warroom planning guidelines are in place.

2.5 RESPONSIBILITIES OF THE MAINTENANCE MANAGER (TRACK) AND THE TRACK INSPECTOR (MAINTENANCE MANAGEMENT)

The Maintenance Manager (Track) focuses on the planning of track maintenance and is responsible for:

2.5.1 The safe passage of trains, the safety of the public as well as the safety and health of his personnel,

2.5.2 The effective maintenance of the track and associated works on his section,

2.5.3 Inspections and the use of approved systems to plan, schedule and control all work

2.5.4 Ensuring that the requirements of applicable legislation are complied with.

2.5.5 The Track Inspector (Maintenance Management) focuses on the planning of track maintenance work and is responsible for the above mentioned on specific sections allocated to him.

2.5.6 Make arrangements with the Production manager if the track personnel and the Engineering
Technicians under his control need training.

2.6 RESPONSIBILITIES OF THE PRODUCTION MANAGER (TRACK)

The Production Manager (Track) is responsible for:

2.6.1 The safe passage of trains, the safety of the public and for the safety and health of his personnel at work sites.

2.6.2 Using approved systems to manage all his work.

2.6.3 The efficient use of resources.

2.6.4 Ensuring that all completed work complies with accepted norms and standards.

2.6.5 Ensuring that the personnel under his control receive the necessary practical training in the correct use of and the efficient handling of material, tools and equipment. He must ensure that they are trained, developed, coached and that they acquire sound experience in all aspects of track maintenance work.

2.6.6 Performing any other duties assigned to him.

2.6.7 Ensuring that the requirements of applicable legislation are complied with.

2.7 RESPONSIBILITIES OF TRACK PERSONNEL IN CHARGE OF HEAVY ON-TRACK MACHINES

The person in charge of the work site (Track inspector or Track master) is responsible for:

2.7.1 The safe passage of trains, the safety of the public as well as the safety and health of his personnel at the work site,

2.7.2 Ensuring that contractors comply with relevant safety measures and instruct their personnel accordingly,

2.7.3 Ensuring that work codes are complied with,

2.7.4 Ensuring that contract conditions are adhered to, according to the contract specifications.

2.7.5 Ensuring that resources are used efficiently,

2.7.6 Ensuring that the quality of service is maintained

2.7.7 That the requirements of applicable legislation are complied with.

2.7.8 Must be in possession of a valid road knowledge certificate.

2.7.9 Ensure that break certificates and road worthiness (of all OTMs) are valid.

2.8 RESPONSIBILITIES OF THE ENGINEERING TECHNICIAN

The Engineering Technician is responsible for:

2.8.1 Performing all the duties assigned to him from time to time.

2.8.2 Assisting with the improvement of the tools for the management of track maintenance.

2.8.3 Assisting the Track Inspectors (Maintenance Management) with the planning, scheduling and controlling processes of track maintenance,

2.8.4 Assisting the Maintenance Manager (Track) with the collection and processing of data

2.8.5 Assisting in the determination of the long-term resource requirements.

2.9 RESPONSIBILITIES OF THE TRACK MASTER

Within his work area the Track master is responsible for:

2.9.1 The safe passage of trains, the safety of the public and for the safety and health of his personnel at the work site.

2.9.2 Performing repair work in accordance with specific procedures and standards.

2.9.3 Communicating regularly each day with traffic controllers and his controlling office.

2.9.4 The efficient use of resources.

2.9.5. Ensuring that the requirements of applicable legislation are complied with.

2.9.6. Develop, coach and mentor junior staff reporting to him.

2.9.7. Must (where applicable) be trained in RRV / MRV / train ruling / contract working and traditional teams, and

2.9.8. Performing any additional duties assigned to him.

2.10 RESPONSIBILITIES OF THE TRACK WELDER

Within his work area the Track Welder is responsible for:

2.10.1 The safe passage of trains, the safety of the public and for the safety and health of his personnel at the work site.

2.10.2 Performing work in accordance with specific procedures and standards.

2.10.3 The efficient use of resources.

2.10.4 Ensuring that the requirements of applicable legislation are complied with.

2.10.5 Develop, coach and mentor junior staff reporting to him.

2.10.6 Performing any other duties assigned to him.

2.11 RESPONSIBILITIES OF THE TECHNICAL SUPERVISOR (WELDING) AND TRACK INSPECTOR (PRODUCTION)

Within their work area the Technical Supervisor (Welding) and the Track Inspector (Production) focus on the execution of track maintenance work and are individually responsible for:

2.11.1 The safe passage of trains, the safety of the public, and for the safety and health of their personnel at the work site.

2.11.2 Using approved systems to manage all their work.

2.11.3 The efficient use of resources.

2.11.4 Ensuring compliance with specific procedures and standards.

2.11.5 Ensuring that material, tools and equipment are neatly kept and that the appropriate records are kept.

2.11.6 Ensuring that the personnel under their control receive the necessary practical training in the correct use of and the efficient handling of material, tools and equipment and to help them in obtaining a comprehensive practical knowledge of track maintenance work.

2.11.7 Ensuring that the requirements of applicable legislation are complied with.

2.12 RESPONSIBILITIES OF THE TRACK MANAGER AND THE TECHNICAL MANAGER (WELDING) IN THE CENTRAL OFFICE

The Track Manager and the Technical Manager (Welding) of the central office are responsible for:

2.12.1 Training, coaching and for transferring their knowledge and expertise to all involved in track maintenance work.

2.12.2 Ensuring that formal and on the job training of personnel conforms to requirements.

2.12.3 Ensuring that the requirements of applicable legislation are complied with.

2.13 RESPONSIBILITIES OF THE TRACK SUPERINTENDENT WELDING

Within their work area the Track Superintendent Welding perform 50% work for the Maintenance Manager and 50% for Production Manager (overall accountability to Maintenance Manager). The Track Superintendent Welding is responsible for:

2.13.1 The safe passage of trains, the safety of the public, and for the safety and health of their personnel at the work site.

2.13.2 Using approved systems to manage all their work.

2.13.3 The efficient use of resources.

2.13.4 Ensure compliance with specific procedures and standards.

2.13.5 Ensure that the personnel under their control receive the necessary practical training an the correctly use of and the efficient handling of material, tools and equipment and to help
them in obtaining a comprehensive practical knowledge of welding maintenance work.

2.13.6 Ensuring that the requirements of applicable legislation are complied with.

2.14 RESPONSIBILITIES OF THE TRACK INSPECTOR TRAINING AND SAFETY (ACT 85)

The Track Inspector Training and Safety supports the Depot Manager / Production Managers and he is responsible for:

2.14.1 Coordinating the Training of Trainee Track Masters in Depot training and record keeping.

2.14.2 Record keeping of all training in depot Track personnel, OHTE Electric, Signal Induction for contract working.

2.14.3 Flagman Training and certification.

2.14.4 Tools and Small plant training and certification.

2.14.5 Assistance at Sub Depot Safety.

2.14.6 Ensuring that the requirements of applicable legislation are complied with.

2.14.7 Performing any other duties assigned to him.

2.15 RESPONSIBILITIES OF THE TRACK INSPECTOR PRIVATE SIDINGS

The Track Inspector Private Siding (at applicable depots) is responsible for:

2.15.1 Performing work in accordance with specific procedures and standards.

2.15.2 Ensuring that the requirements of applicable legislation are complied with.

2.15.3 Performing any other duties assigned to him.

2.15.4 Carrying out inspection as per MICA requirements and Chapter 18.

2.16 RESPONSIBILITIES OF THE TRACK INSPECTOR CONTRACTS

Within his work area the Track Inspector Contracts is responsible for:

2.16.1 Ensuring that the requirements of applicable legislation are complied with.

2.16.2 Performing work in accordance with specific procedures and standards.

2.16.3 The safe passage of trains, the safety of the public as well as the safety and health of his personnel at the work site.

2.16.4 Ensuring that contract conditions are adhered to according to the contract specifications.

2.16.5 Ensuring that resources are used efficiently.

2.16.6 Ensuring that the quality of service is maintained.

2.16.7 Ensuring that Contractors comply with relevant safety measures accordingly and instruct their personnel.

2.16.8 Performing any other duties assigned to him.

2.17 GENERAL RESPONSIBILITIES OF INFRASTRUCTURE-MAINTENANCE PERSONNEL

2.17.1 Protection of trains and safeguarding of employees

2.17.1.1 Where protection of Infrastructure-Maintenance teams at work sites overlaps, all the parties involved must agree beforehand upon a Person in Control (Competent Track Master/Inspector) for the extended work site, who will be responsible for the protection arrangements in terms of the Protection Agreement. The supervisors involved must ensure that all personnel under their control are aware of the applicable protection arrangements at the extended work site.

2.17.1.2 Protection duties may only be undertaken by an employee who has been certified competent by an officially authorised competent person.

2.17.1.3 The names of employees competent to perform protection duties must be kept on record.

2.17.1.4 The Person in Control (Competent Track Master/Inspector) must ensure that work teams are adequately safeguarded. Special care must be taken when safeguarding work teams working in busy station yards, on curved tracks, in cuttings, on multiple tracks or where the view is restricted. Where work teams are working close to mechanised equipment, they must be warned of the approach of a train by means of a hooter, siren or other device, the sound of which must be audible above the noise of the machines.

2.17.1.5 When the track is not safe for the passage of trains the Person in Control (Competent Track Master/Inspector) must instruct the Flagman regarding the warning to be given to train drivers.

2.17.1.6 When the track is not safe for the passage of trains at normal speed, the Person in Control (Competent Track Master/Inspector) must instruct the Flagman regarding the warning to be given to train drivers.

2.17.1.7 In the event of maintenance work being done to or adjacent to the track and the safety of passing trains and/or personnel and equipment could be affected, the Person in Control (Competent Track Master/Inspector) must instruct the hand-signalman regarding the warning to be given to train drivers.

2.17.1.8 The Person in Control (Competent Track Master/Inspector) must show the hand-signalman where hand signals must be displayed and where detonators must be placed and he must ensure that the protection complies with the approved protection procedures.

2.17.1.9 When work on or adjacent to the track can affect the safety of trains, occupation of the track must be taken by the Track inspector or Track master.

2.17.2 Detonators

2.17.2.1 Under no circumstances may tests of detonators be arranged or undertaken by unauthorised persons.

2.17.2.2 In the event of a detonator failing to detonate when a rail vehicle moves over it at an estimated speed of 10 km/h or higher, a detailed report must be submitted to the Depot Engineering Manager's office for further investigation and follow-up. This report must be submitted together with the defective detonator as well as the remaining detonators in the original container from which the defective one was taken. All defective detonators must be sent back to Manufacture.

2.17.2.3 Reports must include the type and estimated speed of the vehicle as well as track and weather conditions.

2.17.2.4 Where detonators are placed on the track, the person responsible must ensure that nobody comes within a 3m radius of the detonators.

2.17.2.5 Detonators may not be placed less than one metre from a block joint.

2.17.3 Safety precautions

2.17.3.1 Track personnel must take precautions to safeguard life and to protect property when working or handling equipment or material.

2.17.3.2 Track personnel are not allowed to have pets with them when they are on duty.

2.17.3.3 Highly visible clothing, reflective braces and other specified Personal Protective Equipment must be worn by all personnel on or alongside the track.

2.17.4 Safety precautions in stations and yards

2.17.4.1 On completion of the day's work, any tracks in a station or shunting yard which have not yet been filled in and the ballast levelled off or where released material has not yet been removed or where new material has been unloaded but not yet installed into the track, the Track master must advise in writing the traffic controller or controlling office accordingly. In the interests of safety of yard officials and other employees, the Track master must, where required, provide white lights to indicate the obstruction.

2.17.4.2 When working at stations, crossing loops, inter sidings or private sidings, track teams must examine the points in the normal and reversed positions. The crossings, points locks and bridles must also be examined. After the examination has been completed, care must be taken that the points are locked in the normal position

n.

2.17.5 Call outs

The Track Master is responsible for attending promptly to defects communicated to him for repair via the Infrastructure-Maintenance fault control system. These faults can be reported by train drivers, track, signal or electrification personnel, the train control centre/traffic controllers, contractors, public etc.

2.17.6 Breaking of the line

Before breaking a line for alterations or repairs, the Track Master must have authorisation for occupation of the track and must consult with the traffic controller in charge at each end of the section affected, the official in charge of the station/yard or the traffic controller in the train control centre, as the case may be. All relevant safety precautions required must be observed.

2.17.7 Breaking of track circuits

2.17.7.1 On electrified sections or where there are track circuits, a line must not be broken for alterations or repairs unless an authorised representative of Electrical and/or Signals is present or has been consulted. See clause 13.5.4.

2.17.7.2 Any two rails of a line which are track-circuited must not be short circuited, i.e. connected with metal objects such as track gauges, steel tapes or slewing bars, etc.

2.17.8 Accidents and obstructions

2.17.8.1 Any accidents, irregularities or defects observed (of the track, passing trains, the signalling equipment or overhead track equipment) which are likely to interfere with the safe running of trains, must be reported immediately to the train control centre/traffic controller. The train control centre/traffic controller must ensure that the defect is reported to the official fault control system of Infrastructure-Maintenance. The person on duty at the official fault control system of Infrastructure-Maintenance must ensure that the appropriate Infrastructure-Maintenance teams are called out for the maintenance work. If telephone communication fails, the arrival of the first train must be awaited and the problem reported to the driver. If a Track master/Track inspector/production manager (track) is present then such person must instruct the driver of the actions to be taken and accompany the driver over the problem area. If a Track master/Track inspector/production manager (track) is not present, the driver must decide on the best course of action. Everything possible must be done to stop trains where immediate danger exists.

2.17.8.2 Track gangs must proceed promptly to the scene of the accident or obstruction and take the following actions:

2.17.8.2.1 Provide protection in accordance with the Protection Manual irrespective of any protection measures which may have already been provided by others. This must be maintained until the work is completed or alternative arrangements are implemented by the Person in Control (Infra Coordinator).

2.17.8.2.2 The Person in Control (Competent Track Master/Inspector) must ensure that correct protection is maintained until he is sure that the line can be re-opened to traffic.

2.17.8.2.3 All lines that are not safe for the passage of trains must be protected on those sides of the obstruction from where a train might be expected.

2.17.8.2.4 Track personnel may not interfere with, or give instructions or advice to a member of another department who is affording protection.

2.17.8.3 The primary object after an accident is to assist the injured and to get the train service back

to normal as quickly as possible. Track personnel must assist wherever it may be necessary, in order to expedite repairs to the track so that normal working may be resumed as soon as possible. They are not to be used as a source of labour for other departments, especially if expeditious repairs to the track may be adversely affected.

2.17.8.4 The Track Master must restore or assist in restoring normal working as soon as possible and report full particulars of the incident and of any additional assistance or material which may be required in order to re-open the line.

2.17.8.5 The **G140** form must be submitted after all accidents involving trains. The **T458** form (BBD8147 version 1) must be submitted after any accident other than:

- a head-on, rear-end or side-on collision
- an accident due to an obstruction
- where a stop block was hit or a train ran through turnout points or a wheel tyre/broken axle caused the accident and there is agreement, amongst all parties involved on site, that the track condition did not contribute to the cause of the accident, the exact cause of the accident must be determined on site, by consensus amongst all the parties involved. This information may not however be communicated to anybody outside Transnet.

The Depot Engineering Manager must ensure that the track measurements necessary to complete the **T458** form are taken before any work is done on the track. The form must be signed by every person who has a share in completing it.

2.17.8.6 When vehicles are to be re-railed by pulling or propelling, the Track master must take precautions to protect the track against avoidable damage.

2.17.8.7 When trucks conveying explosives or dangerous goods are involved in an accident, the Track master must not unload or interfere with these trucks except as instructed in writing by the responsible senior officer or his deputy (must be in position of an ID card). The responsible senior officer must decide as to the best and most effective action to be taken in accordance with instructions relating to the safe handling of explosive materials involved in accidents. (refer to relevant regulations)

2.17.8.8 Once damage to the track is repaired and it is safe for the passage of trains (at normal or restricted speed), the Person in Control (Infra Coordinator) of repair work (Competent Track master, Track inspector or Production Manager) must advise the traffic controller at one of the adjacent stations or, if applicable, the train control centre/traffic controller, accordingly.

2.17.8.9 Official inquiries into accidents must be conducted as set out in **Circular A.10-1**.

2.17.8.10 In the case of animals injured or killed by trains, the Track master must remove them from the track to a safe distance outside the structure gauge. If the owner(s) is/are known and reasonably available, he/they must be asked to take further responsibility and to remove the animal(s)/carcasses. In all other instances the personnel of Infrastructure-Maintenance must take care and dispose of the animal(s) in accordance with locally prescribed procedures. Any maintenance work that might be required on the track must be done and the track certified safe for the passage of trains.

The Track master must complete and sign form T502/Transnet Freight Rail 410 and forward it to the Depot Engineering Manager's office. This form must be completed only insofar as the apparent or known information is on hand at the place where the incident occurred and at the time of clearing the track.

Other Infrastructure-Maintenance work required at or in the vicinity where the incident occurred, e.g. repairs to fences, must be reported immediately to Infrastructure fault control.

Infrastructure fault control will arrange for all further maintenance work to be undertaken and for any subsequent investigations, administrative matters or claims procedures which may be required. The Track master shall, if called upon to do so, pass on any helpful information to these parties.

2.17.9 Reporting of track defects

2.17.9.1 Track defects that may affect the safe running of trains, must be reported immediately to the train control centre/traffic controller as well as through the official fault control system of Infrastructure-Maintenance. Everything possible must be done to stop trains where immediate danger exists.

2.17.9.2 Track defects which do not affect the immediate safe running of trains, but which if left unattended could further deteriorate and present a danger to rail traffic over the short or medium term, must be reported to the Depot Engineering Manager 's organisation for purposes of planning of maintenance.

2.17.9.3 The person on duty at the fault control system of Infrastructure-Maintenance will ensure that Infrastructure-Maintenance personnel are contacted to undertake maintenance action.

2.17.9.4 The Track master must at start of his shift and at the end of his shift as well as regularly during the course of his shift establish if any track defects have been reported at the infrastructure fault control system. As soon as defects have been repaired, the Track master must notify the relevant party and advise him of the exact kilometre point where the defect was repaired as well as the nature of the repair work and the time it was done as well as further actions required.

2.17.9.5 Any deviation from **clauses 2.13.9.1** to **2.13.9.4** must be recorded in **Chapter 20.**

2.17.10 Goods found next to the track

2.17.10.1. Any foreign items such as luggage, goods or equipment observed on Transnet property must be reported to the nearest Police station and obtain a case number**.** Details of time and place where luggage or goods were observed must be given.

2.17.10.2. When approaching or handling any luggage, goods or equipment found on Transnet property, the instructions set out in the Hazardous Materials Handbooks, must be observed and applied. See also Clause 2.13.15.

2.17.10.3. When approaching or handling asbestos found on Transnet property the instructions as outlined in the Transnet Freight Rail Procedure for Handling of Asbestos, must be adhered to. (refer to written safety procedures)

2.17.11 Taking over a length

2.17.11.1 When a Track inspector or a Track master takes over a section, he must be shown over the length by his predecessor or supervisor.

2.17.11.2 Places requiring attention must be pointed out and details of the current programme of maintenance work must be given.

2.17.11.3 The Track inspector or Track master must systematically examine every feature of the track so that he may become familiar with the types, quantities and condition of the track materials and with the types and condition of bridges and culverts and other structures. He must acquaint himself with the physical features of his section.

2.17.11.4 He must check the stock of track material, tools and equipment. Any shortages must be reported to the controlling office.

2.17.12 Possession of a reliable Time Measurement Instrument

The Track master and the Track inspector must be in possession of a reliable indication of the correct time of day.

2.17.13 Communication means

The Track master and the Track inspector must be in possession of effective communication means for contacting the train control centre/traffic controller and their controlling office. Cell phone charges are expensive and discretion must be exercised when making calls.

2.17.14 Absence from section

Before leaving his place of residence outside working hours, the standby Track master/Track inspector must advise his controlling officer, who will then be responsible for making the necessary relief arrangements.

2.17.15 Dangerous substances

2.17.15.1 Dangerous substances being transported are identified by a sign in the form of a diamond. The colour of the sign indicates the substance and action(s) to be taken in case of an emergency:

2.17.15.2 Orange indicates explosives and that the area must be evacuated to a safe distance.

2.17.15.3 Green indicates compressed gas and that the area must be evacuated to a safe distance and that confined spaces are to be avoided.

2.17.15.4 Red indicates flammable substances and that evacuation to at least a distance of 500m is required if burning should occur.

2.17.15.5 White indicates poison and that contact must be avoided and that the gas must not be inhaled.

2.17.15.6 Black and white indicates corrosive substances and that contact must be avoided.

2.17.15.7 Blue indicates that the substance is dangerous when wet, is flammable and must be stayed clear of.

2.17.15.8 Yellow indicates oxidisers which may be flammable and must be avoided.

2.17.15.9 Yellow and white indicates that the substance is radio active and that no persons must come within 40m of the substance.

CHAPTER 3

EARTHWORKS, THE FORMATION, DRAINAGE, TUNNELS, BRIDGES, CULVERTS AND TEMPORARY TRACK SUPPORTS (TECHNICAL SUPPORT)

3.0 INSPECTION

The inspection of earthworks, the formation, drainage, tunnels, bridges and culverts as well as temporary track supports must be carried out as set out in **clauses 4.0.5** and **4.0.6**.

3.1 EARTHWORKS

3.1.1 Banks and cuttings must be observed for cracks, landslides and rock falls.

3.1.2 Excavations must be carried out to safe batters. Shoring must be provided if it is impractical to work to safe batters. Shoring must always be provided in trenches and similar restricted excavations where the depth exceeds 1,5m, except when the presence of homogeneous solid rock causes the excavations to be absolutely safe without shoring.

3.1.3 Where excavations are carried out in soft material and the vibration of passing trains may cause caving in of earth, safety precautions must be taken and a temporary speed restriction imposed if necessary.

3.1.4 The formation must be maintained at the width and shape shown in **Annexure 4**.

3.1.5 When embankments are being constructed, material must not foul the structure gauge or obstruct the drainage.

3.1.6 Material to be used and the method of compacting must be approved by the Depot Engineering Manager.

3.1.7 Borrow pits must be made on the lower side of the track if practical. The top of the borrow pit must be at least 3m from the toe of an embankment or from the boundary line, and the borrow pit wall must have a batter. Borrow pits must be drained and fenced if necessary.

3.2 THE FORMATION

3.2.1 A dry formation is a pre-requisite for a stable track structure.

3.2.2 Storm and ground water must be quickly and effectively drained away from the formation.

3.2.3 Competent guidance is required when repairs to the formation are undertaken.

3.3 DRAINAGE

3.3.1 All drains must be kept clean to allow water to flow freely.

3.3.2 Vegetation must not be removed from drains on steep inclines unless precautions are taken to prevent erosion.

3.3.3 Steps provided on slopes of banks and cuttings to gain access to the formation must not interfere with drainage.

3.3.4 Drains and catch water mounds must be built to divert storm water where necessary. The Depot Engineering Manager must give his approval before work is started.

3.3.5 The top edge of a catch water drain or the toe of a catch water mound must, if possible, be at least 3m from the boundary of the right of way.

3.3.6 Material excavated from catch water drains must be deposited on the low side of drains to increase the effective depth of the drains.

3.3.7 The Depot Engineering Manager must be advised if Transnet property might be affected where:

3.3.7.1 Storm-water from adjoining land has been diverted from its natural course

3.3.7.2 New drains are being constructed

3.3.7.3 Dams are being constructed that could cause erosion or flooding

3.3.7.4 Soil erosion is taking place on adjoining land

3.3.7.5 Storm water run-off is increasing.

3.4 TUNNELS

3.4.1 When working in tunnels particular care must be taken, because of the dangers involved, to adequately safeguard all personnel. Adequate lighting is essential.

3.4.2 Interiors of refuges and a 1m surround must be painted white.

3.4.3 Attention must be given to the drainage of tunnels and approach cuttings. Any obstruction in the drains must be removed.

3.4.4 In tunnels with ballasted track, reference pegs must be inserted at 20m intervals in both walls, so that a line which is stretched over the tops of the pegs will touch both rails when the track is at the correct level and cant. A list of offsets from the ends of the pegs to the track centre line must be supplied. The track must be lifted and aligned in accordance with these reference marks.

3.4.5 In the case of tunnels longer than 1000m, the letter ‘P’ must be painted with white paint on a black background at both tunnel portals. This must be clearly visible to indicate that protection may be encountered within that tunnel at the protection distance. These letters must be 600mm high by 400mm wide, positioned at a height of 2500mm above rail level. (align with train working rules)

3.5 BRIDGES AND CULVERTS

3.5.1 Track personnel must look out for the following defects:

3.5.1.1 Scour under piers or abutments and at inlets and outlets of culverts.

3.5.1.2 Structural damage, cracks, loose rivets or bolts, corrosion and movement of bedplates.

3.5.1.3 Loose or ineffective handrails and/or walkways and where bridge or culvert openings are inadequate.

3.5.2 See **clauses 6.6.2** and **6.8.3** for laying of rails on un ballasted bridges.

3.5.3 Safety rails, shown in **Annexure 6**, must be provided on unballasted bridges longer than 10m. In other cases the Depot Engineering Manager will decide whether they are necessary. Each safety rail must be fastened by two coach screws to every sleeper.

3.5.4 Only approved sleepers may be used on unballasted bridges. Sleeper spacing may not be more than 610mm.

3.5.5 The distance between the centre lines of the sleepers behind and in front of ballast walls must not be more than 700mm. Cases where this is not possible must be reported to the Depot Engineering Manager. He will arrange for the rails to be supported directly on the ballast walls, in accordance with **drawing BE 75-22**.

3.5.6 The Depot Engineering Manager must be advised where it is necessary to adjust cant or to eliminate camber on bridges. Loose plates or tapered sleepers must not be used, nor may the track be raised by placing sleepers on top of one another.

3.5.7 Fastening of sleepers on bridges must be in accordance with **Annexure 8**.

3.5.8 Parapets, ballast walls, copings and handrails on bridges and culverts, in areas where shunting is done, must be painted white.

3.5.9 Competent guidance is required when steelwork is repaired and painted.

3.5.10 Culvert entrances and outlets must be cleaned annually before the onset of summer rains (or winter rains in the Western Cape) of all shrubs, bushes and trees to allow for an unrestricted flow of water through the culvert opening. (Technical Support Manager)

3.5.11 When constructing a maintenance road through a culvert opening it must be done in such a manner so as not to restrict the flow of water during sudden down pours.

3.6 TEMPORARY TRACK SUPPORTS

3.6.1 Should a line require temporary support, this can be provided by sleeper cribs, steel bridging cribs, trestles or rail girders. Details are shown in **Annexure 7**.

3.6.2 A speed restriction of 15 km/h must be imposed on a track with temporary supports. Alternatively pipe jacking may be considered instead.

3.6.3 Temporary track supports must be inspected at frequent intervals preferably at least daily. All fastenings must be kept tight.

3.6.4 Rail girders

3.6.4.1 The track must be fitted with wood sleepers, placed at 600mm centres.

3.6.4.2 Top-rail girders are used principally when excavations are to be made under open lines. Bolts and rail girder clamps must not project above the top of the running rails. Girders must be laid on sleeper cribs.

3.6.4.3 Bottom-rail girders are principally used in emergencies. They are built on top of sleeper or bridging cribs and provide a working platform on which a new track can be built.

3.6.5 Cribs

3.6.5.1 All sleepers must be sound, square and straight. Wood wedges must be used to eliminate any movement. Wedges must be anchored.

3.6.5.2 The bottom layer of sleepers in cribs must be close-laid and parallel to the track centre line.

3.6.5.3 Rails used with double stack cribs must have the same height (size) and must be sound and free of defects.

CHAPTER 4

INSPECTIONS AND TRACK GEOMETRY

4.0.0 Inspections general

Inspections of the track and associated infrastructure are used as a safety measure also to determine the annual and long term work load.

The responsibilities of individual track maintenance personnel are to ensure that:

- İnspections are carried out by competent personnel, at the required frequencies, and in accordance with the available work codes.
- written inspection reports are prepared and systems are used to ensure action is taken and appropriate records are kept. It must be seen against the specific and general responsibilities described in chapter 2 and elsewhere in this manual.

4.0.1 Patrolling

4.0.1.1 Each depot's patrolling process must be submitted to and approved by the Infrastructure Manager and recorded in **chapter 20**.

4.0.1.2 The Track Inspector (Maintenance Management) must ensure that the approved process of patrolling and defect reporting is carried out.

4.0.1.3 If a track defect or damage to the track which may affect the safety of trains is observed, patrolling must be abandoned and protection afforded according to laid down instructions, first on the side from which the first train is expected and then on the other side. The defect/damage must be reported in accordance with clause 2.13.8.and 2.13.9.

4.0.1.4 In addition to telephonically reporting defects or damage in accordance with **clause 4.0.1.3,** a report must be submitted to the Depot Engineering Manager's organisation, recording information gathered for each day on which patrolling was done. This report must be used for an input for planning track maintenance work.

4.0.1.5 During stormy weather, special patrols must be carried out to ensure that the track, earthworks, formation, drainage and associated structures remain safe for the passage of trains. The maximum flood water level must be recorded (on both sides of the track) during wash-aways.

4.0.2 Trolley Inspections

4.0.2.1. During trolley inspections individual responsibilities must be focused on, as set out in **Chapter 2.**

4.0.2.2. The Chief Engineer (Infrastructure-Maintenance) must inspect S and N1 lines annually, N2-lines every second year and N3-lines once every 3 years.

4.0.2.3. The Infrastructure Manager must inspect S and N1-lines twice a year, N2 lines once a year and N3-lines every second year.

4.0.2.4. The Chief Engineer (Permanent Way Infrastructure) of PRASA should be allowed to annually inspect Transnet Freight Rail lines that carry PRASA traffic.

4.0.2.5. The Depot Engineering Manager must inspect S and N1 lines every month N2 lines every second month and N3 lines once every four months. Fifty percent of these inspections may be delegated to the Maintenance Manager (Track).

4.0.2.6. The Track Inspector (Maintenance Management) must inspect S, and N1 lines every week, N2 and PRASA trafficked lines every second week and N3 lines once per month.

4.0.2.7. Trolley inspections must be pre-planned on an annual basis.

4.0.2.8. Inspections should be carried out at the probable speed of a typical train traversing the section.

4.0.2.9. Footplate inspections may be substituted for trolley inspections.

4.0.2.10. Deviations from the above must be approved by the Infrastructure Manager, and the method(s) adopted and inspection frequencies must be recorded in chapter 20.

4.0.2.11. Track personnel must also be encouraged to take part in trolley inspections at other depots as the process will speed up training and the transfer of skills. Production Manager to be included.

4.0.3 Footplate inspections

4.0.3.1 Attention must be afforded to those aspects that will not emerge from other inspections.

4.0.3.2 The Depot Engineering Manager and Maintenance Manager must respectively inspect all lines twice and four times annually with at least one inspection being undertaken during night time. Half of these inspections may be delegated.

4.0.3.3 The inspection trip should be undertaken on a train representing the most common train running on that section.

4.0.3.4 The driver should be requested to indicate over which sections he usually reduces speed due to poor track conditions. On such sections the reaction of the locomotive must be afforded special attention.

4.0.3.5 The driver's special knowledge of track conditions must be fully utilised.

4.0.3.6 Deviations from the above must be approved by the Infrastructure Manager and must be recorded in **chapter 20**.

4.0.4 Inspections by the track measuring car

4.0.4.1 The track measuring car is used to measure the geometric condition of the track.

4.0.4.2 These track measurements must be used to ensure compliance with responsibilities as set out in **clause 4.0.0** and **chapter 2**.

4.0.4.3 The Track Inspector (Maintenance Management) must accompany the car, take note of defects and if necessary initiate urgent repairs. (Refer to clause 4.1.1.3.7). He must not be used as a pilot. Production track inspector and a pilot must a company the car.

4.0.4.4 The responsible Engineer or Engineering Technician must accompany the car to ensure that contract conditions are met.

4.0.4.5 Measuring frequencies will be determined by the Chief Engineer (Infrastructure-Maintenance). Deviation from the frequencies must be approved by the Infrastructure Manager and recorded in **chapter 20**.

4.0.5 Inspection of structures

4.0.5.1 Bridges, culverts and lined tunnels must be inspected at least once per year. Unlined tunnels must be inspected monthly by the Track Inspector (Maintenance Management).

4.0.5.2 Coal stages, turn tables, pits, retaining walls and water towers must be inspected annually.

4.0.5.3 See **clause 3.6** with regard to temporary track supports.

4.0.6 Inspection of earthworks, the formation and drainage

Earthworks, the formation and drainage must be inspected at least once per year.

4.0.7 Ultrasonic and x-ray inspections (split the two)

The frequency of inspections is determined by the Depot Engineering Manager, in consultation with the Chief Engineer (Infrastructure-Maintenance). Deviation from the work code must be approved by the Infrastructure Manager. Measurement frequencies and deviations must be recorded in **chapter 20**.

4.0.8 Inspection of track material

4.0.8.1 Track material should be inspected annually by the Depot Engineering Manager's organisation.

4.0.8.2 Inspections must be carried out in accordance with the latest MICA document.

4.0.8.3 Deviations from the MICA document or inspection frequency must be approved by the Infrastructure Manager, and recorded in **chapter 20**.

4.0.8.4 Foot inspections must be done annually to see the condition of sleepers, fastenings, rails, ballast. Records must be kept.

4.0.9 Inspection of turnouts, slips and diamond crossings ('sets')

4.0.9.1 These inspections are the responsibility of the Track Inspector (Maintenance Management). Inspections must be carried out in accordance with the latest MICA document.

4.0.9.2 Sets on S and N1 lines must be inspected at least once a month. The frequency of inspections on N2 lines, N3 lines and in yards must respectively not exceed 2, 4 and 6 months.

4.0.9.3 Deviations from the work code or inspection frequency must be approved by the Infrastructure Manager, and recorded in **chapter 20**.

4.0.10 Inspection of signs, level crossings and fences

4.0.10.1 Three monthly inspections of road and track signs, level crossings and fences is the responsibility of the Track Inspector (Maintenance Management).

4.0.10.2 In addition, the items mentioned in clause 4.0.10.1 should be regularly observed by track personnel that work in the area in order to arrange for urgent repairs to be undertaken.

4.0.10.3 Deviations from the MICA document or inspection frequency must be approved by the Infrastructure Manager, and recorded in **chapter 20**.

4.0.11 Inspection of clearances

4.0.11.1 The Depot Engineering Manager must ensure that annual inspections are carried out and that the conditions set out in **chapter 8** are complied with.

4.0.11.2 Deviations from the work code or inspection frequency must be approved by the Infrastructure Manager, and recorded in **chapter 20**.

4.1 TRACK GEOMETRY

4.1.1 Standards

4.1.1.1 The geometric condition of the track has an important influence on the life cycle of the track structure, the cost of track maintenance also with regard to rolling stock.

4.1.1.2 As a result of this influence on costs and the relative ease with which geometry can be measured, general standards have been developed to assist in the process of defining work priorities.

4.1.1.3 The general maintenance standards

Threshold:	A	B	C
PROFILE:	1:1000	1:250	1:180
Chord length (metres):	7	7	7
	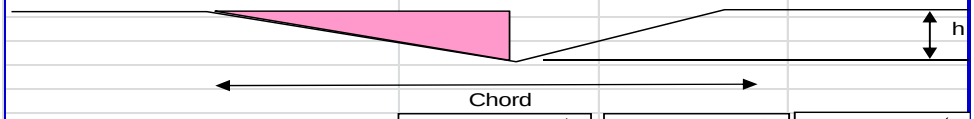		
	$h = \frac{(7000/2)}{1000}$	$h = \frac{(7000/2)}{250}$	$h = \frac{(7000/2)}{180}$
From the red triangle:			
h (mm) =	3.5	14.0	19.4

Threshold:	A	B	C
ALIGNMENT:	1:2000	1:500	1:360
Chord length (metres):	10	10	10
	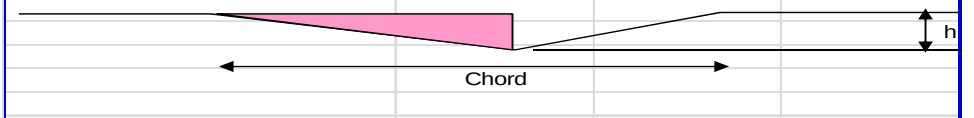		
	$h = \frac{(10000/2)}{2000}$	$h = \frac{(10000/2)}{500}$	$h = \frac{(10000/2)}{360}$
From the red triangle:			
h (mm) =	2.5	10.0	13.9

Threshold:	A	B	C
TWIST (T/C):	1:1000	1:400	1:288
Chord length (metres):	2.75	2.75	2.75
	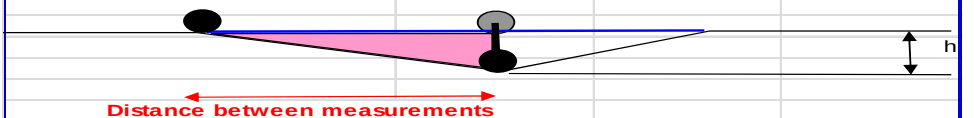		
	$h = \frac{(2750)}{1000}$	$h = \frac{(2750)}{400}$	$h = \frac{(2750)}{288}$
From the red triangle:			
h (mm) =	2.8	6.9	9.5

4.1.1.3.1 When track work is done, the work must conform to the A-standard.

4.1.1.3.2 Repair work must be considered when the B-standard is exceeded.

4.1.1.3.3 On S lines work must be done before the C-standard is reached.

4.1.1.3.4 On N1 lines work should preferably be done before the C-standard is reached.

4.1.1.3.5 On N2 lines urgent inspection of track outside the C-standard is required and maintenance inputs or speed restrictions must be considered; and

4.1.1.3.6 On N3 lines track outside the C-standard must be inspected regularly and maintenance inputs or speed restrictions must be considered; and

4.1.1.3.7 When the C-standard is exceeded, repair work must be given a higher priority

4.1.1.3.8 A work place is a 50m portion of track where one or more measurements occur that are outside the requirements of the B-standard with regards to the aspect hereafter mentioned

4.1.1.4 Numerical values for geometric parameters:

The standards show permissible deviation from design values, except for twist, which are absolute values.

4.1.1.4.1 Horizontal alignment on straight track:-
A: - 1:2000
B: - 1:500 and
C: - 1:360.

4.1.1.4.2 Horizontal alignment, on curves and on transition curves:-
A :- (5% x Mo) + 2.5mm
B :- (20% x Mo) + 2.5mm
C :- (30% x Mo) + 2.5mm
Mo=**H** being the mid-ordinate, in millimetres, measured with a 10m cord.

4.1.1.4.3 Vertical alignment:-
A: - 1:1000
B: - 1:250 and
C: - 1:180.

4.1.1.4.4 For twist the standards are:

Straights and circular curves	**Transition curves**
A: - 1:1000	A: - 1:500
B: - 1:400 and	B: - 1:400
C: - 1:288.	C: - 1:288

4.1.1.5 For specific application of these standards reference must be made to the work code for geometric track evaluation.

4.1.1.6 Deviations **from clauses 4.1.1.1 to 4.1.1.3** must be approved by the Depot Engineering Manager and recorded in **chapter 20**.

4.1.2 Transition curves

4.1.2.1 A transition curve is a curve of varying radius such that the centrifugal force generated on the track by a train travelling at a constant speed, increases uniformly from the end of the tangent track to the beginning of the circular portion of the curve.

4.1.2.2 On running lines the most appropriate transition curve lengths are 60m for curves less than or equal to 300m and 80m for curves with a radius of more than 300m.

4.1.3 Gauge

4.1.3.1 On straight track the gauge for broad gauge track is 1 065mm and 610mm for narrow gauge track.

4.1.3.2 The gauge for track on curves and the maximum permissible gauge due to wear, is

Standard gauge track (1 065 mm gauge)

Radius (m)	Without check rails Gauge (mm)	
	Normal	Maximum
< 135	1 085	1 105
135 – 150	1 080	1 105
151 – 175	1 075	1 100
176 – 200	1 070	1 095
> 200, tangent track	1 065	1 090
	With check rails Gauge(mm)	
< 135	1 090	1 105
135 – 150	1 085	1 105

Narrow gauge track (610mm gauge)

Radius (m)	Without check rails Gauge (mm)	
	Normal	Maximum
< 200	620	630
200 – 300	615	625
> 300, tangent track	610	620

Summary of track gauge standards

Nominal Gauge	Permissible Deviation from Specified Gauge (mm)					
	A – Standard		B – Standard		C - Standard	
	Min	Max	Min	Max	Min	Max
1 065 mm	-3	+5	-7	+12	-10	+25
610 mm	-3	+3	-4	+7	-6	+10

4.1.3.3 Steel and wood sleeper fastenings, with clips and bolts, are designed to allow gauge adjustments in steps of 5mm. The gauge can vary from 1 065mm to 1 090mm with new rails.

4.1.3.4 Gauge widening must take place in accordance with **Annexure 9, sheets 2 and 3**.

4.1.3.5 When laying track with wood sleepers, the initial gauging should provide widening at a uniform rate.

4.1.3.6 Where rails are laid on wood sleepers with sole plates, or cast iron chairs with keys, re-gauging must not be resorted to. The high leg rails must be renewed before the maximum permissible track gauge has been reached.

4.1.3.7 Where rails are held with clips, re-gauging by changing the clip combination must be undertaken if the limit of gauge is reached before the limit of rail wear. Refer to **Annexure 11** and **clause 17.1.4**.

4.1.3.8 Any deviations from these standards must be documented, approved by the Infrastructure Manager and included in chapter 20 of this manual.

4.1.4 Cant

4.1.4.1 Cant must be provided in accordance with **Annexure 9, sheet 4.** When temporary speed restrictions are introduced on curves, cant must also be adjusted according to Annexure 9, sheet 4 if vertical clearances allow this to be practically possible. Where a temporary speed restriction of 15km/h is applied, half of the cant as for 30km/h must be applied. See also clause 13.4.2 for electrified lines. Speed restrictions on curves must be removed as a matter of priority. Speed restrictions on sharper curves must be treated with higher priority and immediate consideration must be given to reducing the cant as an alternative if the speed restriction is expected to remain in force for a period time. Depot Engineering Manager to certify the cant configuration based on local conditions.

4.1.4.2 The cant of curves in yard tracks must not exceed 10mm.

4.1.4.3 On curves without transitioned ends, two-thirds of the full cant must be applied at the beginning and end of the curve. The cant must be increased to the full amount towards the middle of the curve and decreased to zero into the straight at a rate not exceeding 10mm in 5m (i.e. 1:500, the maximum permissible twist in transitions).

4.1.4.4 On curves with transitioned ends, application of cant must commence at the point where the transition curve joins the straight. Cant must be uniformly applied over the transition

to reach the required value at the point where the transition curve joins the circular curve. Should this not be possible without exceeding the rate of 10mm in 5m, cant must be uniformly applied at the maximum rate over the transition and into the circular curve.

4.1.4.5 On reverse curves where the intervening straight is less than 40m, both rails of the track must be at the same level for a distance of 6m between the two curves.

4.1.4.6 At or near mainline points and crossings and wherever the rate of wear on rails indicates that it is advisable, the specified cant may, on the authority of the Depot Engineering Manager, be increased or decreased by up to 20mm for 1 065mm and 10mm for 610mm gauge lines.

4.1.4.7 When a turnout is situated on a curve, no cant is to be provided over the turnout but a permanent speed restriction of 30 km/h must be imposed.

4.1.5 Gradients

4.1.5.1 Whenever work is performed in yards the track gradient should not be changed.

4.1.6 Sleeper spacing and permissible deviations

4.1.6.1 Sleeper spacing shall comply with:

Track position	Permissible deviation from specified spacing (mm)		
	A – Standard	B – Standard	C - Standard
At rail joints	10	30	40
Rest of Track	25	100	150

4.1.6.2 Sleepers per 50m track

Number of Sleepers	Permissible deviation from specified number of sleepers		
	A - Standard	B – Standard	C - Standard
Insufficient Sleepers	0	2	4
Too many Sleepers	0	4	8

4.1.7 Sleeper and rail fastenings

4.1.7.1 Sleeper fastenings

To comply with the A – B or C – standards the numbers of sleepers with loose, missing or defective fastenings per 50m of track must not exceed the value M in table below. There may further not be more than value N consecutive sleepers with loose missing or defective fastenings.

	A - standard	B – standard	C - standard
Value M	0	4	8
Value N	0	2	3

4.1.7.2 Rail fastenings

To comply with the A – B or C – standards respectively not more than 0, 1 or 2 loose, missing or defective joint bolts may occur on any joint.

4.1.8 Universal Sleeper and Bolts replacement on turnouts

Minimum requirements for installation of universal sleepers with Infra bolts on turnouts (incl. yards and branchlines). Not applicable to heavy haul lines.

4.1.8.1 Once installed the bolts must be torqued to between 240 and 250 Nm and re-torqued a week after installation.

4.1.8.2 All bolts must be greased by applying anticorrosive grease over the whole length of the thread before installation.

4.1.8.3 A HDPE pads with a minimum thickness of 5 mm must be used between the steel hardware and concrete sleeper. HDPE pad comes in a strip of 4.3 m long x 200mm wide and must be cut on site.

4.1.8.4 A Stumec and impact wrench may not be used for the installation of the bolts.

4.1.8.5 Prostruct 35.30 must be used at the bottom of the sleeper on the nut. 2 Litres should be sufficient to do a set. Once the epoxy is mixed it must be used within 30 minutes. The epoxy (Sealed Kits) must under no circumstances be stored or placed in the sun.

4.1.8.6 Careful consideration should be given to make sure that provisions are made to fit the cradle for the point's rodding and the two indicator frame. The cradle may be fastened with a minimum of 3 Infra bolts provided that at least two of the bolts are prevented from turning by installing a locking plate or tag washers. Each contractor must submit his proposed method for approval to Technology Management.

4.1.8.7 The following serves as a guideline on typical fastening methods.

4.1.8.18.1 1mm Cromedeck flat plate with two bolt holes. The ends are bent up and knocked over to prevent the bolts from tuning.

4.1.8.18.2 18 mm Tag washer of suitable thickness and material.

4.1.8.18.3 Under no circumstances may the steel reinforcing be cut off. These holes must be left out.

4.1.8.8 Each sleeper must have a minimum overhang of 200 mm i.e. The length from the side of the plate to the end of the sleepers shall not be less than 200 mm. The first hole in the sleeper must be at least 250 mm from the one side and 250 + 100 from the other side. This will allow for the re-use of the sleepers if new hardware is installed. On the stock and switch panel the 100 mm could be increased to 200 mm. If the sleepers are moved for the new steel hardware the old and new holes must be at least 100 mm apart.

4.1.8.9 If holes will be closer than 150 mm the one hole must be left out. Technology Management to approve deviations accordingly.

4.1.8.10 The holes in the HDPE pad must be between 26-30 mm.

4.1.8.11 Before coring the sleepers must be aligned and positioned to make sure that the holes do not align with the reinforcing. The sleeper has small indents marking the position of the reinforcing within 15 mm.

4.1.8.12 The hole must be cored at a 90 degree angle to the concrete surface wit a maximum error of 3 degrees.

4.1.8.13 All possible bolts must be installed. See guidelines below.

4.1.8.14 Technology management is busy considering reducing the number of bolts. (Details to follow).

4.1.8.15 Preferably all bolts on sleeper 1 to 6 must be installed. If not, a minimum of 3 bolts per rail seat must be installed provided, that this does not happen on consecutive sleepers.

4.1.8.16 The bolts on the rails seats of the stock and switch must be as above.

4.1.8.17 The rest of the set have a minimum of 3 bolts on the 4 hole plates and a minimum of 2 bolts on the 3 hole base plates provided that the minimum number of bolts does not happen on consecutive sleepers.

4.1.8.18 Exceptions to the rules above provide for:

4.1.8.18.1 Places where the holes are in the centre of the sleeper, and
4.1.8.18.2 Skew plates causing holes to overlap on the reinforcing.

4.1.8.19 In order to ensure that the turnouts can be measured accurately and be built to the correct gauge, the metal flow in the gauge corner (Overburden) of the rails should be removed by TFR prior to the Contractor arriving for measurement of the turnout.

4.1.8.20 The Contractor shall only start work on turnouts, which can be repaired to the ‘A’ standard with the installation of the universal sleepers.

4.1.8.21 The holes in the steel hardware must be at least 24 mm. All holes smaller that 24mm must be reamed to a maximum of 25 mm.

4.1.8.22 The steel washer at the top must be at least 6 mm thick with a 4 mm at the bottom of the assembly.

4.1.8.23 When welding needs to be done on the set the E-clips and T-bolts must be loosened and not the Infra bolt.

4.1.8.24 The “Infra bolts” system may only be used to fasten plates with a thickness of between 20 and 35 mm.

CHAPTER 5

SETS (TURNOUTS, SLIPS AND DIAMOND CROSSINGS)

5.0 INTRODUCTION

5.0.1 Turnouts, slips and diamond crossings (collectively called 'sets') are expensive to replace, costly to maintain and are weak links in the track structure.

5.0.2 Unused sets must be removed in collaboration with relevant parties following the prescribed process.

5.0.3 Before sets are replaced, Operating, Electrical and Signals should be consulted to establish whether the layout can be simplified.

5.0.4 Sets must preferably be pre-assembled in a workshop according to the latest Quick Reference for Building of Turnouts. The process must be guided by competent track personnel.

5.0.5 Sets must be built, inspected, evaluated and maintained in accordance with the latest work codes. Before a set is put into the track it must be checked in every detail by the Track inspector, to ensure that it is correctly built.

5.0.6 Maximum allowable speed over and speed restrictions applicable to sets are prescribed in the General Appendix/General Train Working Rules.

5.0.7 Re-usable released turnout components must be correctly cut so as to render maximum re-usability after refurbishment.

5.0.8 Refurbished second hand turnout components may be obtained from the Refurbishment Depot at Beaconsfield for use in lesser trafficked lines instead of new material.

5.1 GENERAL

5.1.1 If unavoidable, one exothermic joint or one flash-butt welded joint is permitted in lead and closure rails, provided the joint positions comply with **Annexure 18 sheet 1**.

5.1.2 Turnouts of 1:6 angle to **drawings E7051, E7075 and E7078** must be built only as equal-split turnouts.

5.1.3 On split 1:12 and 1:9 turnouts (i.e. through line is not straight), 5m and 4,88m guard rails respectively, must be used on both legs of the turnouts.

5.1.4 Where the guard rail projects beyond the end of the guard stock rail, and there is insufficient clearance for the inner 100% joint plate at the stock rail's joint, a flat or angle joint plate must be paired with the outer 100% joint plate.

5.1.5 The alteration of stock rails and points blades from one hand to the other by bending or straightening the stock rail at the vertex is only allowed as follows:

Location	Rail weight	Type of set
Yards and Sidings only	30 kg/m and 40 kg/m	1:8 to 1:12
All lines	30-kg/m and 40-kg/m	1:5 to 1:7
All lines	22-kg/m	All

5.1.6 Gauge for sets must be in accordance with the work code for the building of turnouts, slips and diamond crossings.

5.1.7 Where turnouts are on curves, the gauge must be adjusted (forward from the extreme end of the guard rail and backward from the stock rail joint of the turnout), by 5mm every 6 sleepers, until it matches the gauge of the curve. (Refer to clause 4.1.3.5)

5.1.8 The gauge at the obtuse crossing of diamond crossings must be checked at least every six months, and if less than 1 065mm or more than 1 075mm, must be adjusted to 1070mm.

5.1.9 Working parts must move freely, fit correctly and be kept clear of obstructions. Nuts and bolts securing components must be kept tight. Broken bolts must be replaced.

5.1.10 Whenever any component of a turnout is replaced, the mismatch of the rail running surfaces must be rectified by welding and/or grinding without delay.

5.1.11 Welding and grinding must be performed in accordance with the latest work code.

5.1.12 Heel bolts must be greased over their full length to prevent rusting.

5.2 MAINTENANCE OF STOCK AND POINTS RAILS

5.2.1 General

5.2.1.1. To reduce the wear on switch blades, switch lubricators must be installed. Alternatively lubrication may be affected by applying grease or graphite by hand. (Refer to clause 5.2.1.7)

5.2.1.2. Bolts and/or cotter pins holding stock rails to chairs must be securely in position.

5.2.1.3. Heel bolts must be tightened to prevent undue movement, but without interrupting the easy operation of the points blade. Ferrules must be in position and replaced when worn.

5.2.1.4. Points blades must fit the stock rail closely and accurately with full bearing against the head.

5.2.1.5. Points blades must rest on the slide chair. Should the points blade show a tendency to rise off the sliding surface, the cause must be ascertained and the fault rectified.

5.2.1.6. Burrs/Overlap which interfere with the fit of switch blades against stock rails or with the operation of locking bars, must be removed by grinding. Burrs/Overlap must further be kept in check in order to prevent breakouts on switch blades and stock rails. Grinding must be done in accordance with the Specification for Track Welding.

5.2.1.7. All sliding chairs must be black-leaded/ lubricated over the first 1,25m. Slide chairs (except where teflon slide plates are fitted on concrete sleepers) must be cleaned and black-leaded/ lubricated. Lubricating oil may not be used.

5.2.1.8. Unusual wear of points blades must be reported to the Maintenance Manager, in order to decide on protective measures. (point protector to be inserted 50mm before the blade on the side with most wear)

5.2.1.9. Points blades must be renewed (with welding where permitted) before they become worn to an extent likely to affect safe working.

5.2.2 Hinged points blades

5.2.2.1 Hinged points blades must be replaced under the following conditions:

5.2.2.1.1 Before 300mm of the points blade is worn to a knife edge.

5.2.2.1.2 Before wear creates a knife edge that is more than 15mm below the rail level of the stock rail at any position. (Measured with the points blade well seated on the slide chairs)

5.2.2.1.3 If chips occur that are more than 25mm long or 10mm deep on the points blade and below the rail level of the stock rail (welding repairs can be done in the first metre of the points rail). (Refer to Welding Manual: BBB 8341 or latest).

5.2.2.1.4 Before side-wear occurs on the points stock rail.

5.2.2.1.5 If black spots appear on the crown of the points blade, or shelling or mushrooming occurs.

5.2.2.2 Where heavy crown wear occurs on the stock rail and little or no wear on the corresponding points blade, the stock rail must be renewed with welding and/or grinding, where permitted. Alternatively, the points rail must be ground to fit, before the vertical gap between the running edge of the stock rail and the top of the points blade exceeds:

- 8mm in the area where crown wear is caused by hollow wheels' false flanges
- 2mm at the machined end of the points blade.

5.2.2.3 Points blades and/or stock rails must be replaced together, (if a matching piece is not available) when the crown wear of either exceeds 10mm.

5.2.2.4 Points blade protectors (reversible web-mounted block or lead guard rail) may be used to limit wear of points blades in yards and running lines with low speeds 30kmph. See **Annexure 19 Sheet 2 of 3**.

5.2.2.5 Where points blade protectors or lead guard rails are used, the correct setting of the gap between the open points blade and the stock rail on either side must be ensured.

5.2.2.6 Only one, not both, of the points blades may be protected in this way on a turnout at any time. The points blade protectors or lead guard rails must at all times be properly fastened to the stock rail.

5.2.3 Flexible type points blades and undercut stock rails

Flexible type points blades and undercut stock rails must be replaced together under the following conditions:

5.2.3.1 Before wear creates a knife edge over a distance of:

- 1 000mm for 1:9 turnouts
- 1 100mm for 1:12 turnouts
- 1 300mm for 1:20 turnouts,

measured from the tip of the points blade.

5.2.3.2 Before the top of the points blade, at any position further than 1 000mm from the tip, is worn more than 15mm below rail level of the stock rail (measured with the points blade well seated).

5.2.3.3 If chips occur that are more than 25mm long or 10mm below rail level of the stock rail.

5.2.3.4 Before side-wear occurs on the points stock rail.

5.2.3.5 If black spots appear on the head of the points rail or shelling or mushrooming occurs.

5.2.3.6 If side-wear occurs on the stock rail but not on the points blade. The points blade and stock rail must be replaced before the points blade chips or bends over.

5.2.3.7 Before the crown wear of the points blade or stock rail exceeds 10mm.

5.2.3.8 With a swivel type of tumbler the opening gap for setting is 51mm either side and tumbler arm in the centre of frame. When the blade is closed the gap must not be smaller then 102mm.

5.2.3.9 With a stiff neck type of tumbler the opening gap for setting is 63.5mm either side and tumbler arm in the centre of frame. When the blade is closed the gap must not be smaller then 127mm.

5.3 MAINTENANCE OF FROGS

5.3.1 Rail manufactured frogs

Frogs should be replaced when the top wear (of the point- or splice rail) measured from a straight edge placed across the wing rails one metre from the nose of the frog, reaches:

5.3.1.1 In running lines: - 5mm (for all rail sections).
The frogs' use may be extended by:

- welding and grinding of the frog and the throat-area of the wing rails
- grinding of the throat-area of the wing rails (to relieve wheel hammer).
  The permissible wear may then be increased as indicated in **clause 5.3.1.3**.

5.3.1.2 In loops, sidings and yards the frogs may be allowed to wear until wheel flanges touch the bottom of the flangeway (spacer blocks). This should normally only occur when top (crown) wear exceeds that shown in clause 5.3.1.3.

5.3.1.3 Allowable crown wear of crossing frogs

Rail profile	**Running lines**	**Loops, sidings, yards**
60 kg	**10mm**	**15mm**
≥48 kg	10mm	15mm
40kg	8mm	10mm
≤30kg	5mm	6mm

5.3.1.4 Guard stock rails must be replaced together with frogs if the components' sleeper spacing require it.

5.3.2 Cast 14% manganese frogs (Railbound and Monoblock)

5.3.2.1 Maintenance welding and grinding work must be performed in accordance with the Welding Specification sections SSS13 and SSS14 .

5.3.3 The wing rails of the movable V-type frogs are to be removed by grinding before the wear (measured as in clause 5.3.1) exceeds 3mm. The moveable V piece is to be replaced before the wear exceeds 10mm.

5.3.4 The overlap that forms on frogs must be removed by grinding before chips form in the overlap.

5.3.5 Components must be replaced before the maximum clearance between the guard rail and the guard stock rail opposite the frog is 50mm (57mm for old type 1:7 turnouts).

5.4 POINTS LOCKS AND KEYS

5.4.1. Where signalling gear is not installed, track personnel must replace defective points locks.

5.4.2. Provided the lock itself is sound, a key which cannot open a lock or which can be withdrawn from an open lock must be scrapped.

5.4.3. Defective locks and keys must be returned to the Depot Engineering Manager's office for out repair or replacement.

5.4.4. Missing points locks must be replaced and the circumstances reported to the officer in charge.

5.4.5. Points locks must be black-leaded internally**.**

5.4.6. Patrick locks are used in accordance with operating instructions at some sets, including those at fuel sidings.

5.5 BRIDLE-LOCKED POINTS

5.5.1 The amount of slack in bridles or bridle chains of locked tumbler levers must not exceed 15mm.

5.5.2 At interloops where there is no signalling, counter weight arms must be provided with two bridles, one on each side of the arm. The lock must be placed so that the tumbler may be locked when set for the main line.

5.6 POINTS TUMBLERS

5.6.1 Fitting points tumbler with retaining mechanisms (Racor, Henry Williams, or as shown in **Annexure 27 sheet 4**), will improve safety of train movements over sets.

5.6.2 On running lines, the counter weights or the indicator plates must be painted half white and half red. The white half must be uppermost when the points are set for the main line.

5.6.3 Counter weights of points tumbler not on running lines must be painted white. If the points must be kept locked in a specific position, the centre recess on both sides of the counter weight must, on direction of the yard official in charge, be painted black.

5.6.4 The clearance of the counter weight arm to the track centre line is 2 000mm. Depending on track centres, a points box with arm working parallel to the track may be required. The tumbler on tumbler operated sets equipped with points indicators shall be painted black. **(See BBB1366 Version 3).**

5.6.5 The Track master must ensure that the throw of the stiff-arm type points box is equal for both settings of the points.

5.6.6 The Track master must ensure that pins of the levers are lubricated when the turnouts are cleaned.

5.6.7 Points tumbler components must be renewed before they become so worn that either the tumbler is not easily thrown over, or the points remain partially open.

5.6.8 The Track master must ensure that switch blades lock properly, both in the turnout and mainline setting.

5.6.9 Where derailments tend to occur on sets in yards, the switch Tumblers must be replaced with a Tumbler (stokstyf) with spring loaded linking mechanism. Refer Annexure 27 sheet 4.

5.7 SPIKED POINTS

If it is necessary to restrict movements through a turnout to one track, the points blades must be set for that track and secured with an adjustable points clamp and private lock or with a joint plate and two ‘A’ coach screws. The train control centre/traffic controller must be notified accordingly.

CHAPTER 6

RAILS

6.0 THE TRANSPORT AND HANDLING OF RAILS

6.0.1 Rails must be handled with care.

6.0.2 Rails must be off-loaded (based on approved methods) as close as possible to the time that they are required, and exactly as planned. Special care must be taken to match adjoining rails when re-conditioned, re-profiled and second hand rails are offloaded.

6.0.3 Offloaded rails must be kept clear of the track, electrical and signal equipment and must not be covered with soil or ballast.

6.0.4 Rails must be offloaded clear of level crossings.

6.1 BENDING AND STRAIGHTENING OF RAILS

6.1.1 Because of the danger of fracture, rails must not be straightened or curved in cold weather. (5 degrees and less)

6.1.2 Before rails are placed in the track, all kinks must be removed.

6.1.3 On all curves, rails must be uniformly curved to true radius, as follows:

6.1.3.1 All 36m and shorter rails, throughout their length.

6.1.3.2 Continuous welded rail:

- curve radius $<$ 500m:- curved throughout their length.
- curve radius $\geq$ 500m:- 10m at each end must be curved.

6.1.4 The correct size jim-crow must be used for the mass of rail concerned.

6.1.5 If a mechanical jim-crow is used, the last metre of the rail must be curved with a hand type jim-crow.

6.1.6 When a hand type jim - crow is used, it must be moved by approximately half its length at a time.

6.2 RAIL USAGE

6.2.1. Consideration must be given to transpose the high leg rail to the low leg rail in order to optimise the wear life of rails (authorisation by the Chief Engineer required). Consideration should also be given to exchange the rails on tangent track with rails on curves. Refer decision models clause 16.3.8.(Refer to S.TM.13/13 limits)

6.2.2. Only class C and better rails may be used.

6.2.3. When another type and/or class of rail other than that mentioned in **Annexure 3** is considered for use, it must comply with the requirements of an equivalent rail as indicated below and with **clause 10.3.1.1.3**.

RAIL TYPE AND CLASS	EQUIVALENT RAIL
60 New 60 Class A 60 Class B 60 Class C	 57 New 57 Class A
57 New 57 Class A 57 Class B 57 Class C	60 Class B 60 Class C 48 New 48 Class A
48 New 48 New 48 Class A 48 Class B 48 Class C	57 Class B 60 Class C 57 and 60 Class C 57 and 60 Class C 57 and 60 Class C

6.2.4. When rails are chosen for a specific application, the price and remaining life as well as sleeper compatibility must be taken into account.

6.3 JUNCTION RAILS

6.3.1 Junction rails are used for joining rails of different sections, spanning either two, or alternatively three, rail masses.

6.3.2 Junction joint plates may only be used when the use of junction exothermic welds or junction rails is not possible.

6.3.3 Wherever possible junction exothermic welds must be used in stead of junction rails or joint plates.

6.3.4 When ever junction exothermic welds or junction rails are used, the corresponding welds on the two rail legs shall always be in-between the same two sleepers.

6.4 CLOSURE RAILS

6.4.1 Closure rails may not be less than 4,2m in length and must be secured to all supporting sleepers.

All closure rails must be ultrasonically tested before installation. The wear limit should not exceed 6mm. (refer to CWR)

6.4.2 Closure rails and the adjoining rail ends must be curved as in **clause 6.1.3**.

6.4.3 During rerailing work closure rails may be fastened with joint plates and with two G clamps, or with joint bolts in the outer holes of the joint plates. This is only a temporary measure to allow trains to pass through until the Track master leaves the work site at the end of a work day. **This measure is not applicable to heavy-haul lines**.

6.4.4 When rerailing work stretches over more than one day, closure rails may be fastened with joint plates and with four G clamps, or with joint bolts in all the holes of the joint plates. This is only a temporary measure to allow trains to pass through during the absence of the Track master from the work site in between shifts. This allowance is only valid for a period up to 48hours and 30 kph speed restriction should be imposed. **This measure is not applicable to heavy-haul lines.**

6.4.5 When closure rails are installed in track and left temporarily before exothermic welding the joints, both rail ends must be joined to the adjacent rails by joint plates and four joint bolts.

6.4.6 When closure rails are welded into the track all four rail ends must be free from dipped ends and joint bolt holes. Rails must be cropped and a longer closure used if necessary.

All closure rails to be ultrasonically tested. Mismatch wear should not be more than 6mm.

6.4.7 In the case of continuous welded rails, the closure rail must be welded into track and the rails on that leg must be destressed over at least 80 sleepers either side of each weld position. The first weld may be cast while the rail temperature is outside of the A-range but the last weld must be cast with the rail temperature inside the A-range. The rail stress must be measured on both legs and destressing executed if required. Where a break was caused by tensile stress, both rails must be destressed over a distance of at least 500m on either side.

6.4.8 All fastenings and rail off-cuts must be removed from site.

6.4.9 On electrified lines, jumper cables must be applied before starting work. (Refer to **clauses 2.13.6 and 2.13.7 and 13.5.4 and** Works Code Ref.TFR/I/COA/13/4/1/32)

6.5 CHECK RAILING

6.5.1 Check rails are provided to prevent excessive wear on the high legs of curves and to prevent derailments. See **Annexure 9, sheet 3**.

6.5.2 Check rails must be used on curves with radius 149m and less.

6.5.3 Check rails must start and end where the gauge of the track is 1 075mm.

6.5.4 Where new rails are used as check rails they provide a flange way of 63mm. The maximum permissible flange way is 83mm.

6.5.5 Re-gauging must not be carried out on check-railed track. Check rails must be renewed at the same time as high leg rails.

6.5.6 Reconditioned rails, classes B and C, may be used for check rails. Side-worn rails used as check rails must be placed so that wheelflanges of vehicles bear against the unworn edge.

6.5.7 Joints in check rails must be located between sleepers at least 3m from joints in low leg rails.

6.5.8 A gap 25mm wide must be left in the check rail opposite an insulating joint in the low leg running rail. The wearing edge must be chamfered 5mm over a length of 50mm on both sides of the gap.

6.5.9 Trains must not be allowed to pass over a curve from which a portion of the check railing has been removed, unless the remaining portion of the check rail has been fitted with tapered end pieces at both ends.

6.6 LAYING RAILS IN TRACK

6.6.1 General

6.6.1.1 When loading or off-loading rails, care must be taken to prevent damage to rails. When off-loading rails the height that rails are dropped onto the track must be strictly controlled to prevent damage to the rails and the track infrastructure.

6.6.1.2 Rail temperatures must be measured by placing the thermometer on the flange or web of the rail and shading it from direct sunlight. The thermometer should remain in contact with the rail for at least ten minutes before readings are taken.

6.6.1.3 Rails must be cut square and vertical and with a saw or a disc-cutter.

6.6.1.4 All rails in tunnels must be welded into continuous lengths.

6.6.1.5 Track circuit and other bonds should preferably be bolted to the rails. The Cad-method of welding may not be used with Cr.Mn.-rails.

6.6.1.6 Exothermic welds must as close as possible be positioned halfway between sleepers. No trains to run on Cr.Mn or HH rails before welding.

6.6.2 Jointed track (joint plated rails)

6.6.2.1 Rails must be laid within the temperature ranges specified in **Annexure 16**. Correct expansion gaps must be provided by using shims which must be removed before trains are permitted to pass.

6.6.2.2 If 36m rails are laid outside the temperature ranges specified, the expansion gaps must be adjusted within the specified rail temperature ranges as soon as possible.

6.6.2.3 Rails must be laid with square joints. If stagger develops to more than 60mm owing to variations in rail lengths or track curvature, the rail must be cut. 36m rails with holes in must be cut 100mm from leading end.

6.6.2.4 Should jointed rails occur on unballasted bridges in a section of track with continuous rails, permanent splice joints must be provided: (Refer to clause 6.8.3)

- At both ends of multiple-span bridges.
- At both ends of bridges having a single span greater than 25m.
- At the free end of a bridge having a single span of 25m or less.

The splice joint must be at least 9m from the back of the ballast wall and clear of any safety rail.

6.6.2.5 Rail joints must not be placed less than 3m from deck supports or ballast walls.There must be no rail joints on spans of less than 7m.

6.7 CONTINUOUS RAILS

6.7.1 General

6.7.1.1 Continuous rails are rails longer than 36m.

6.7.1.2 Continuous rails must be 40kg/m or heavier, depending on permitted axle loads.

6.7.1.3 Concrete, wood or 40kg steel sleepers may be used.

6.7.1.4 Ballast must be sufficient and of acceptable standards. Refer to clause 17.1.2

6.7.1.5 In this clause the term ‘re-railing’ includes final jointing of rails, by exothermic welding or other wise. Destressing of rails within the appropriate temperature range forms part of the laying of continuously welded rails.

6.7.1.6 ‘The destressing range’ means the appropriate temperature range, as per clause 6.10.7.

6.7.1.7 The laying and destressing of continuous rails must be managed by an Engineer or an Engineering Technician.

6.7.1.8 A complete record must be kept on form T1286(M) when destressing and/or welding is carried out.

6.7.1.9 On continuous railed track the geometry should be maintained to a standard **equal or better** than the B standard.

6.7.2 Track structure for running lines

6.7.2.1 Crossing loops are classified as running lines.

6.7.2.2 Continuous rails may be used on tangent track and curved track down to 800m radius, provided that the sleeper spacing is not more than 800mm.

6.7.2.3 For concrete sleeper track the radii of curves on which continuous welded rails are used may be reduced to 600m radius provided that the sleeper spacing does not exceed 700mm and 400m radius provided that the ballast profile is at least 3000mm or the sleeper spacing is not more than 600mm.

6.7.2.4 In the case of steel and wood sleepers the radius may be reduced to 600m provided that the sleeper spacing does not exceed 700mm.

6.7.2.5 Where a curve consisting of jointed track is joining unto a section of continuously welded rails, a transition length of jointed track of at least 80 sleepers between where the curve ends/begins and the continuously welded rails begins/ends must be applied.

6.7.2.6 With special written permission from the Chief Engineer (Infrastructure-Maintenance) continuous rails may be used on curves with sharper radii than 400m (see clause 6.7.9).

6.7.2.7 Wood sleepers must be fitted with type E3131 chairs.

6.7.3 Track structure for yard tracks

6.7.3.1. Continuous rails may be used on tangent track and curved track down to 600m radius, provided that sleeper spacing is not more than 800mm.

6.7.3.2. Concrete sleepers with FIST fastenings may be used under locking and safety bars. The open end of the clip must be on the outside of the rail.

6.7.3.3. Steel sleepers of 40 kg may be used at 800mm spacing under continuous rails down to and including 400m radius but 80 sleepers at the turnout ends of the continuous rails must be at 700mm spacing. Steel sleepers may not be used under locking and safety bars.

6.7.3.4. Joint plated joints on turnouts may be exothermic welded if the points blades do not require frequent replacement and the rail mass is 40kg/m or greater.

6.7.4 Laying continuous rails within the destressing range

6.7.4.1 While derailing, trains may be allowed to pass at 30 km/h if every fourth sleeper is fully fastened and temporary rail joints are made with joggle joint plates secured with two clamps, provided the Track master is present on site. Refer clause 6.4.3. and 6.4.4.. The speed of 30 km/h must apply until all the sleepers have been secured and permanent rail joints have been completed. Temporary expansion gaps must be set to facilitate final jointing.

6.7.4.2 Rails must at least be fastened to alternate sleepers within the limits of the destressing range, and the fastenings on all the other sleepers must be tightened before the limit of range B is reached. Re-railing that was not completed as above must proceed as in **clause 6.7.5**.

6.7.4.3 The left and right-hand rails must be fastened down simultaneously.

6.7.4.4 The last 80 sleepers of previously laid track must again be destressed before derailing is resumed.

6.7.4.5 Short track lengths may be destressed at a time, provided the procedures set out herein are adopted.

6.7.4.6 Re-railing more than 20m inside a tunnel is not subject to destressing temperature considerations.

6.7.5 Laying of continuous rails outside the destressing range

6.7.5.1 Re-railing may proceed within the limits of temperature range B. Refer clause 6.7.1.5.

6.7.5.2 While derailing, trains may be allowed to pass at 30 km/h, if every fourth sleeper is fully fastened and temporary rail joints are made with joggle joint plates secured with four clamps.

6.7.5.3 After derailing, all sleeper fastenings and all joint bolts must be tightened and a speed restriction of 30 km/h must be imposed until the track has been destressed.

6.7.6 Laying of continuous rails on new formation

6.7.6.1 The new formation must be approved by an Engineer before track laying is commenced.

6.7.6.2 Traffic may only run on newly laid track after the sleepers have been packed sufficiently to ensure adequate and even bearing and to provide a uniform running top.

6.7.6.3 To ensure the safe use of the track during ballast consolidation, the rails must be destressed after the track has been fully ballasted, packed and aligned. Prior to destressing a speed restriction of 30 km/h must be applied to construction trains.

6.7.6.4 After the ballast has been consolidated the rails must again be destressed. A speed restriction of 50 km/h must be applied from the first destressing up to this point.

6.7.7 Laying of continuous rails on unballasted bridges

Continuous rails may be laid over unballasted single and multiple-span bridges of any length and the splice joints omitted provided that:

6.7.7.1 Type E3131 chairs are fitted on all the sleepers and that all the chairs except those on 5 consecutive sleepers at the fixed end of each span are fitted with type E3205 washers.

6.7.7.2 All bridges with a span less than 10 meter with type E3131 chairs are fitted with type E3205 washers.

6.7.7.3 When laying new rails, exothermic welds on bridges must be avoided, and must be kept as far off the bridge as possible - preferably more than 20m.

6.7.7.4 If exothermic welds cannot be avoided, rail ends must be cropped to eliminate all joint bolt holes.

6.7.7.5 On completion of all exothermic welding of joints on the bridge, the rails must be destressed before commencing with the nearest welds off the bridge. On completion of destressing, the clip bolts of the anchoring sleepers at the fixed end(s) of the bridge span(s) must be firmly tightened.

6.7.8 Slacks, kinks and kick-outs

6.7.8.1 Should slacks, kinks or kick-outs occur in continuous rails, prompt protective measures must be taken.

Slacks

To comply with the A - , B- , and C- standards the pairs of track gauge readings on top the rail, with the gauge set at 1065 mm, on both sides of G, F and H in the sketch and table below. The values on the table must not be exceeded.

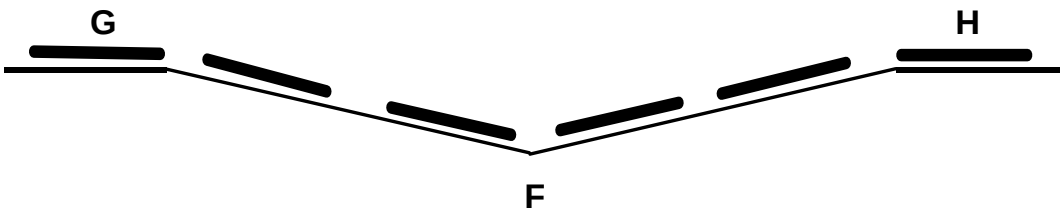

Both readings of a pair uphill or downhill			
	1:1000	1:250	1:180
	A-Std	B-Std	C-Std
Difference in readings	1mm	4mm	6mm

One reading of a pair uphill and the other downhill			
	A-Std	B-Std	C-Std
Sum of readings	1mm	4mm	6mm

The run – outs of long slacks must meet the requirements of clause 4.1.1.4.3

Before repair work on long slacks is undertaken, the run-outs excluded, the permission of the Depot Engineering Manager must be obtained.

6.7.8.1.1 The comply with the A-, B- or C-standards the track gauge cant readings at G, F and H in figure above must be such that the following requirements are met:

6.7.8.1.2 Cant to the same side – the difference in readings at G and F or F and H respectively must not exceed the values in table 4.

6.7.8.1.3 Cant to different sides – The sum of the readings at G and F of F and H respectively must not exceed the values in table 4.

6.7.8.2 Kick-outs in track with continuous rails must be eased to prevent further deterioration, provided the track is not pulled out from under the traction contact wire. Electrical must be called out when a kick-out occurs on an electrified section. Trains may be allowed to pass over the affected portion of the track if this can be done with safety. Depending on the seriousness of the situation, a temporary speed restriction must be imposed.

6.7.8.3 The track alignment must be restored only when the rail temperature is within the destressing ranges.

6.7.8.4 In all cases where kick-outs occur the rails must be cut and destressed for at least 500m on either side of the kick-out point.

6.7.8.5 The track (both rails) must be destressed over a distance of 500m on either side of where the track has been disturbed i.e. long slacks repaired, track lifted, re-alignment was done or sleepers replaced.

6.7.9 Continuous rails on sharp curves (see clauses 6.7.1. and 6.7.2.)

6.7.9.1 Special destressing temperature ranges (other than those in Annexure 16), specific conditions for tamping and ballast cleaning, as well as specific conditions that apply to each curve, must be recorded in **chapter 20**.

6.8 RAIL JOINTS

6.8.1 Joint plated joints

6.8.1.1. At least once a year, joint plated joints on running lines must be inspected. Where necessary the joint plates must be removed, cleaned, lubricated and reversed before being replaced. The joint plates and rail ends must be examined for cracks.

6.8.1.2. Except for destressing and exothermic welding, joint plates on rails 36m and longer must only be removed when the rail temperature is within the ranges specified in clause 6.10.7. and annexure 16.

6.8.1.3. The fishing surfaces of joint plates and rails must be cleaned and greased, and the threads of joint bolts must be lubricated before being used.

6.8.1.4. Where rails are bonded for electrical track circuits, the nuts of the joint bolts must at all times be on the inside of the track. Reversal must be effected by transferring the joint plates from one rail to the opposite rail.

6.8.1.5. Joint plated joints must at all times be bolted with all its bolts in place and firmly tightened.

6.8.1.6. Joint bolts must be fitted with spring washers or self-locking nuts.

6.8.1.7. Rail fastenings must be kept uniformly tight. Lengthening bars must not be used on joint bolt spanners.

6.8.1.8. Pressed-to-parallel joint plates may be used with new rails and reconditioned second hand rails. They are stamped "P-P".

6.8.1.9. Enlarged joint plates stamped "E" are for replacing joint plates where the wear of the rail fishing surface justifies their use. They must not be used with new or reconditioned rails.

6.8.1.10. Worn joint plates are not to be used in the track.

6.8.1.11. Joint plate holes must be drilled and sharp edges must be removed.

6.8.1.12. The sleepers on either side of joint plated joints must be of the same type and special attention must be afforded to the tamping of these sleepers.

6.8.1.13. The use of a template is recommended when drilling joint bolt holes.

6.8.2 Insulating joints / block joints

6.8.2.1 An insulating joint (commonly called a block joint) is used to insulate one rail from the next for either signalling or electric traction purposes. Signals or Electrical will indicate where block joints are required. The Track master must fit and replace block joints. If possible, Signals or Electrical should be present. If Signals was not present, the Track master must inform the train control centre/traffic controller, as the case may be, once the block joint has been renewed.

6.8.2.2 Block joints for traction purposes are those insulating non-electrified track from electrified track and those provided on sidings on which flammable liquids are handled.

6.8.2.3 When block joints are inserted in curves, **clause 6.1.3** applies. With prefabricated block joints the jim-crow must not be allowed to span the joint. See **clause 6.5.7** for the installation of block joints in check railed curves.

6.8.2.4 The installation of block joints on open lines involves breaking the track. **(**See **clauses 2.13.6 and 2.13.7)**

6.8.2.5 Work on block joints may only be performed within the appropriate destressing or working temperature ranges (see **clause 6.10.7**).

6.8.2.6 Renewal and maintenance of block joints must be performed in accordance with the latest work code.

6.8.2.7 New block joints must be shortened to the minimum length before installation in order to eliminate the need for additional closures during subsequent block joint replacements. Refer clause 6.4.1. (Block joints can be ordered in different lengths)

6.8.2.8 The block joint gap must be limited to between 4mm and 6mm by using one T-piece only.

6.8.2.9 Worn ballast must be screened out and replaced. Fastenings and block joint bolts must be firmly tightened before thorough tamping of the block joint.

6.8.3 Splice joints

6.8.3.1 Splice joints must be provided at unballasted bridges, as set out in **clause 6.6.2.4.**

6.8.3.2 Splice joints may be used to protect sets and curves, if authorised by the Depot Engineering Manager . In cases where the conditions for continuously welded rails cannot be adhered to safely, splice joints must be used.

6.8.3.3 Splice joints must be renewed before crown wear exceeds 6mm. Measurements at splice joint must be taken over the splice of the join.

6.8.3.4 Splice joints must be installed and set as follows:

- Before welding of the continuous rail has taken place the gap at the point must be adjusted to 25mm.
- The gap must be set immediately before welding to the continuous rail. It must be increased or decreased from the mean setting (which is 50mm from the closed position) by 1mm for every 2°C by which the temperature is lower or higher than the lower limit of the destressing temperature range.

- Welding of splice joints to adjoining rails after final setting of the gap must be completed within the destressing temperature range.

6.9 RAIL CREEP

6.9.1 Fastenings securing rails to sleepers must be kept tight. This will help to prevent creep.

6.9.2 Development of creep must be kept under observation and reported to the Depot Engineering Manager .

6.9.3 If creep develops to such an extent as to disturb sleepers and cause wide or tight joints, the rails must be pulled back and expansion gaps adjusted. Sleepers must be adjusted and fastenings replaced if necessary.

6.9.4 Tapered keys must be driven in the direction in which the forces on the rails appear to predominate, or in the direction of obvious creep. Where there is a tendency for keys to work loose, they must be reversed.

6.10 RAIL DESTRESSING

6.10.1 Because of the length of continuous rails, the stresses building up in them as a result of changes in temperature are very high. The lifting frame must be used to measure the stress free temperature. If the stress free temperature is found to be outside the limits of the A range, destressing must be carried out.

6.10.2 Destressing should also be considered after replacing sleepers, after ballast cleaning, when kick-outs have occurred, when the rail breaks or is cut, or when rail creep is observed. Refer to the decision guidelines and relevant work codes for rail destressing.

6.10.3 In all instances that destressing is called for, measuring of the rails' stress free temperature with the lifting frame should be considered. If the stress free temperature of both rails is within the destressing range, and also within 5°C of one another, the track may be considered as sufficiently stress free. In those areas where the lifting frame indicates excessive or unbalanced rail stress, destressing must be done.

6.10.4 Whenever the stress free temperature of the rail is known to be or is expected to be outside the destressing temperature range, a temporary speed restriction of 30km/h (40km/h for Coalline) must be applied until the rails are destressed or shown to be safe by the use of the rail stress lifting frame.

6.10.5 The stress free temperature is always at mid-point of the destressing temperature range. When destressing, the aim should be to have stress free rails. Depending on local conditions (e.g. rails' susceptibility to breaks resulting from tension stress, actual ballast profiles and sleeper spacing) and with written approval of the Depot Engineering Manager , destressing may be aimed at other temperatures - but always within the destressing temperature range.

6.10.6 If that part of the day when the rail temperature is within the destressing range is uneconomically short, rail tensors must be used. Rail tensors provide excellent control over the destressing process.

6.10.7 When laying, destressing or welding continuous rails, the rail temperature must be taken and recorded every half hour on T1528 destressing from.

6.10.8 Destressing temperature ranges are shown in **Annexure 16**.

6.10.8.1 Where the laying of continuous rails on sharper radii was approved (see **clauses 6.7.2.5** and **6.7.9**) special conditions will apply to each individual curve.

6.11 EXOTHERMIC WELDING OF RAIL JOINTS

6.11.1. Most of all rail breaks occur in exothermic welded joints.

6.11.2. The work code for track welding must be followed conscientiously. (Refer to BBB8341: Track Welding Manual version 4 or latest).

6.11.3. All preparatory, finishing and destressing instructions must be complied with.

6.11.4. Occupation time required to complete an exothermic weld in accordance with specification for normal (grade 700 or 900A) rails, is approximately 45 minutes. Additional time is required for the preparation and finishing of the joint. For CrMn (grade 1100) rails and head harden rails more time would be needed.

6.11.5. On electrified sections electrical continuity must first be provided as described in **clause 13.5.4**.

6.11.6. Welding personnel must inspect every exothermic welded joint and keep a record of the following:

- Location of weld.
- Manufacturer's portion number.
- Temperature before work is commenced and on completion of rough grinding.
- Welder's code and weld number
- Date welded

6.11.7. When an exothermic weld fails, the whole weld must be removed and replaced with a wide gap weld where possible. (Refer to the Track Welding Manual: BBB8341 Version 4 or latest).

6.11.8. Sleepers on both sides of an exothermic weld must be of the same type and should receive special attention during tamping.

6.12 REPAIR OF BATTERED AND MISMATCHED RAIL ENDS AND CARE OF WELDED JOINTS

6.12.1 Effective and efficient joint maintenance will reduce battered rail ends.

6.12.2 Battered rail ends must be repaired as soon as possible.

6.12.3 The cropping and repositioning of rails must always be considered.

6.12.4 Rail-end batter must not be welded if bolt holes have deformed.

6.12.5 Block joint rails must not be welded with the insulating joint plates in position.

6.12.6 Once work has been completed joint maintenance must be improved.

6.12.7 The work code for track welding must be followed conscientiously; and

6.12.8 All preparatory, finishing and destressing instructions must be complied with.

6.12.9 Mismatched joints will be reduced if re-conditioned and second hand rails are selected with the aim of improved matching.

6.12.10 Engineers must pay special attention to the maintenance of flash-butt joints on CrMn.-rails.

6.12.11 Cadwelds may not be used with CrMn.-rails. Instead huckbolted connections must be used for cable bond connections.

6.13 REPAIR OF WHEEL SPIN DAMAGE

6.13.1 Severe wheel spin damage must be treated with the same urgency as a rail break.

6.13.2 Wheel spin damage will be reduced if drivers, Operating, Signals and Locomotive and Truck maintenance are involved in solving the problem.

6.13.3 Where wheel spin damage occurs repeatedly the use of reconditioned or second hand rails must be considered.

6.13.4 The work code for track welding work must be followed conscientiously.

6.13.5 All preparatory, fettling, finishing and destressing instructions must be complied with.

6.13.6 If repair of wheel spin damage cannot be effected immediately, the use of special absorbent rubber pads to minimise damage to the track structure must be considered as an interim measure.

6.13.7 Wheel spin burns up to 1mm deep can be repaired by grinding. Wheel spin burns deeper than 1mm but less than 6mm must be repaired by welding and grinding. Wheel spin burns deeper than 6mm must be repaired by cutting the effected rail and replacing it with a closure rail. Wheel spin burns must be repaired in accordance with the Welding Manual BBB8341 version 4. Nests of wheel spin burns must be evaluated by the Depot Engineering Manager to determine the most productive repair method.

6.14 BROKEN AND DEFECTIVE RAILS

6.14.1 Typical rail defects and fractures are illustrated in Annexure 17, sheets 1, 2 and 3.

6.14.2 Broken or defective rails are potentially dangerous and must be thoroughly examined immediately. Trains may, except in the case of heavy-haul lines, be allowed to pass over broken or defective rails under the conditions set out in Annexure 17, sheet 4.

6.14.3 On heavy-haul lines with CrMn rails or Head hardened rails, temporary remedial measures require special conditions, which must be recorded in chapter 20. (Also refer to clause 13.5.4.)

6.14.4 Before permanent repairs are undertaken on track-circuited sections or electrified lines, Electrical or Signals must be advised.

6.14.5 A T447-report, in respect of each broken or defective rail removed from the track, must be sent to the controlling office each month. If no such rails were removed during the month, a nil return must be submitted. An effective system of control, which will ensure that T447-reports are submitted for all rail fractures, must be introduced in conjunction with Operating.

6.14.6 When broken rails, frogs and points cause derailments, the broken sections must be despatched to the Track Testing Centre, where arrangements will be made for the required analysis.
A sample of approximately 0,5m on either side of the break is required. To facilitate identification, a copy of the T447 report must accompany the sample.

6.14.7 Rails in running lines in which defects are detected ultrasonically, must be marked and dealt with as set out in Annexure 17, sheet 5. Defective rails must be cut out and replaced in accordance with Annexure 18.

6.14.8 Any clean vertical break in a rail, a flash-butt weld or an exothermic weld can be repaired by exothermic welding, provided that all existing welding material is removed (refer to the Track Welding Specification BBB8341 latest Version). Such breaks can be repaired as a temporary measure (except in the case of heavy haul lines) by using joggled joint plates for maximum of 24 hours, The joggle joint plates must be kept in place with four firmly tightened bolts, to permit the passage of trains. In such cases a temporary speed restriction of 30 km/h must be introduced. All other broken and defective rails must be cut out and replaced in accordance with Annexure 18.

6.14.9 All defective rails that are removed from the track must be rendered unfit for further service by burning or cutting grooves across the crown at intervals of not more than two metres. The rail ends must be painted red.

6.15 RAIL WEAR

6.15.1 The maximum permissible wear for all types of rail is as for class C rail according to Annexure 15 sheet 2.

6.15.2 All approved rail wear gauges may be used. The method of using a rail wear gauge is shown in Annexure 15 sheet 1.

6.15.3 The Maintenance Manager (Track) must take measurements and keep a progressive record to establish the rate of wear of rails. This will enable corrective maintenance measures to be taken where necessary and new rails to be ordered in good time.

6.16 RAIL LUBRICATORS

6.16.1 Refer to the latest work code and decision guidelines for the positioning, installation and maintenance of rail lubricators.
For additional information refer to Annexure 19, circular 50161 and drawings E1051, E3212, E3213 and E3243.

6.16.2 The exact location of lubricators must be determined by an Engineer or Engineering Technician.

6.16.3 All curves up to a radius of 1 200m should be lubricated.

6.16.4 Lubricators should be placed on a curve where the offset on a 10m chord is 10 to 15mm, or just before the point on the rail where there are signs of contact between wheel flanges and the rail.

6.16.5 Lubricators should not be placed at roll marks or where heavy sanding takes place.

6.16.6 Check rails must be extended to the straight track (where the gauge is 1 065mm) for installation of check rail lubricators.

6.16.7 Rail and flange lubricators or special points lubricators must be used for the lubrication of points blades of turnouts in yards.

6.16.8 Lubricant must not be deposited on the crown of the rail. The greasing plates must be adjusted to 20mm to 22mm below the top surface of the rail.

6.16.9 Rail lubricators must be maintained and adjusted by qualified personnel.

6.16.10 Repairs must be undertaken in a workshop and by qualified personnel.

6.16.11 The Track inspector must arrange for the filling and cleaning of lubricators.

6.16.12 Lubricators must be checked where on-track machines have worked, to ensure that they have been correctly replaced, properly filled and are in good working order.

6.17 STOP BLOCKS

6.17.1 The back end of a sliding stop block should be approximately 3m from the end of the running rail.

6.17.2 Stop blocks must be painted white.

6.17.3 The use of a single leg stop block is not permitted.

6.18 DERAILING DEVICES

6.18.1 Scotch blocks (Rail manufactured derailer), derailers, run-away points, catch points and derail points (collectively called derailing devices), must be fitted at least 2m outside the clearance mark (away from the turnout), to derail vehicles to the side, away from the more important track and clear of any important structures such as electrification masts and signals. Also see clause 8.3.1.5.

6.18.2 Hand operated hinged derailers must be installed in accordance with drawing E853.

6.18.3 Scotch blocks (Rail manufactured derailer) and derailers must be painted white.

6.18.4 Scotch blocks (Rail manufactured derailer) must be fitted on the outside rail with the hinge on the same side as the track which it is required to protect and lie with the points lock one sleeper nearer to the turnout.

6.18.5 Non-compounded derailing devices must be equipped with chains and points locks.

CHAPTER 7

SLEEPERS AND BALLAST

7.0 SLEEPERS AND FASTENINGS

7.0.1 General

7.0.1.1 Sleepers must be off-loaded as close as possible to the time that they are required and in accordance with the maintenance plan.

7.0.1.2 Sleepers must be laid square to the rails.

7.0.1.3 Sleepers must be tamped to the same extent.

7.0.1.4 All sleeper fastenings must be in place and at all times properly fastened. In the case of the Pandrol E2006 the spring must be pulled through utilizing the latest Panpuller for Open track - Item number 53-712880 and Turnout – Item Number 53-010652 until it can go no further. See letter BBB C7615 Version1.

7.0.1.5 The contact areas of clips and rail flanges must be kept free of lubricant.

7.0.1.6 Proprietary fastenings and those using multi-coil spring washers must be tightened in accordance with the relevant instructions.

7.0.1.7 Anti-vandal / Anti sabotage fastenings must be fitted where necessary.

7.0.1.8 Mixing of different types of sleepers in the same sub-section, must be avoided.

7.0.2 Inspections

Refer to clauses 4.0.1, 4.0.2 and 4.0.8.

7.0.3 Wood sleepers

7.0.3.1 Hardwood sleepers must be laid with the heart down. Laminated wood sleepers may be laid either side down.

7.0.3.2 Sleepers must be handled with care so that the outer layer of treated wood is not punctured or damaged.

7.0.3.3 The diameter of holes for coach screws must be 15mm for softwoods and 17.5mm for hardwoods.

7.0.3.4 Holes for coach screws must be drilled square to the sleeper surface holes). The drill must be fitted with a depth indicator/stopper that will ensure that holes are 15mm deeper than the selected coach screw to be inserted. Newly drilled holes or holes still in good condition must be filled with creosote before the coach screws are inserted. In the case of existing worn holes either ‘Vortok’ coils may be used.

7.0.3.5 If sole plates or chairs with tapered keys are to be used and where gauge widening has to be applied, the holes at one end only of the sleeper may be drilled before the sleeper is placed into the track. The holes at the other end of the sleeper must be drilled after the rails have been laid to the correct gauge.

7.0.3.6 If chairs with clip fastenings are to be used, all holes may be drilled by using templates before the sleepers are put into the track.

7.0.3.7 Old holes that will not be used again must be plugged with dowels, 125mm long, dipped in oil or creosote. 'Vortok' coils should be used to regain holding-down force.

7.0.3.8 Coach screws must be screwed home tightly by means of a box spanner or a coach screwing machine, Impact wrench.

7.0.3.9 In curves on running lines and in turnouts and splice joints, unballasted bridges all anchor points of each rail seat must be provided with coach screws. In all other instances two coach screws (placed diagonally) must be provided per rail seat.

7.0.3.10 Different types of coach screws are used as follows:

Type	Shank length	Used with
H	160mm	Concrete slabs and with nylon inserts, on E3282 chairs and concrete sleepers
HC	192mm	With nylon inserts, on E3338 chairs
F	158mm	Hardwood Chairs with ≥ 30mm base thickness, with double-coil spring washers
A	146mm	Chairs with ≥ 30mm base thickness
B	130mm	Sole plates and chairs with base < 30mm
D	130mm	Locking bars
AL	186mm	Softwood (195mm) All chairs/sole plates

7.0.3.11 Released wood sleepers must be classified as follows and marked with a paint spot of the appropriate colour (50mm in diameter) on both ends of each sleeper.

Class	Colour	Application
2	White	Suitable for running lines
3	Blue	Suitable for yards
4	Red	Unsuitable for use

7.0.3.12 Sound sleepers must not be removed because of the number of coach screw holes. Worn holes must be restored. Broken coach screws that cannot be removed must be cut off and the open holes must be plugged. The sleepers must be used with an offset of about 75mm (alternatively to left and right).

7.0.3.13 The combined use of different thickness wooden sleepers in the same turnout set must not be allowed as it leads to uneven support and tamping of the set as a whole.

7.0.3.14 All cast iron and sliding chairs must be fitted as near as possible to the centre of the sleeper over it's width. Coach screw holes must not be drilled within 50mm from the sleeper edge.

7.0.4 Steel sleepers

7.0.4.1 On electrified sections, ballast must consist of stone and must be kept clean.

7.0.4.2 Instructions regarding the installation of insulating pads must be implicitly followed.

7.0.4.3 Clip bolts must be fitted with spring washers or self-locking nuts.

7.0.4.4 Clip bolts must be lubricated before they are tightened.

7.0.4.5 The ballast bed at the end of steel sleepers must be opened up to expose the sleeper ends and the ballast must be loosened before re-alignment is attempted. The sleepers must not be packed until the track has been pulled to true alignment.

7.0.4.6 Released steel sleepers must be classified as follows and marked with a paint spot of the appropriate colour (50mm in diameter) on both ends of each sleeper.

Colour	**Application**
Green	Useable
Yellow	Repairable
Red	Scrap

7.0.4.7 Steel sleepers must not be used within 10 km of the coast.

7.0.5 Concrete sleepers

7.0.5.1 Concrete sleepers may be used on curves with a radius flatter than 150m.

7.0.5.2 Concrete sleepers must be off-loaded as described in the work code, and may not be thrown from trucks or tipped out of tip trucks. After completion of off-loading, track personnel must make sure that all sleepers are clear of the structure gauge.

7.0.5.3 Within 10km of the coast and inside tunnels, sleeper fastenings must be galvanised. Sleepers with Fist fastenings should only be used with stone ballast, and not in yards where moist conditions resulting from infill material can cause rust.

7.0.5.4 Pandrol and Fist clips must only be applied by means of Panpuller or Fist-levers. The use of the incorrect tools leads to a reduction in the clamping force life of the clips. The clamping force life of the Fist clip expires after 7 cycles of loosening and fastening. The unnecessary loosening and fastening of Fist and Pandrol clips must therefore be avoided.

7.0.5.5 Where wheel spin burns cause damage to concrete sleepers with Fist fastenings, the HDPE pads on four consecutive sleepers must be temporarily replaced with rubber pads. The HDPE pads must be replaced as soon as the rail is repaired.

7.0.5.6 Before traffic is permitted over track laid on newly inserted concrete sleepers, the sleepers must be packed sufficiently to ensure adequate and even bearing.

7.0.5.7 Dual-block sleepers' tie bars are to be left exposed for easy inspection. In running lines all sleepers with cracked or broken tie bars must be replaced. In yards it is adequate to replace every fourth sleeper with a sound sleeper to hold the track true to gauge.

7.0.5.8 Where concrete sleepers are damaged to the extent that they cannot maintain gauge, the track may be temporarily repaired by installing wood sleepers, steel sleepers or gauge straps. On sections where track circuits exist only wood sleepers, monoblock concrete sleepers or isolated gauge straps may be used. For purposes of temporary repair every fourth sleeper may be replaced in this way. A temporary speed restriction must be applied until permanent repairs are effected.

7.0.5.9 Sufficient quantities of gauge straps must be kept in stock at strategic locations for emergency use.

7.0.5.10 The re-use of second hand concrete sleepers must be done in accordance with circular number IM/L01 of 11 March 1999.

7.0.6 Resleepering under continuously welded rails (by hand)

7.0.6.1 During resleepering, the speed of trains must be restricted to 30 km/h.

7.0.6.2 After resleepering has been completed, a speed restriction of 50 km/h must be applied until the ballast has consolidated.

7.0.6.3 At least 8 sleepers on both sides of any sleeper being removed must be fully packed and boxed in. Each replacement sleeper must be well packed and boxed in before an adjacent sleeper is removed.

7.0.6.4 When resleepering, the ballast under the sleeper and in the adjacent cribs must be completely removed, cleaned, replaced and tamped before adjacent sleepers are disturbed.

7.0.6.5 In tunnels (to within 20m of tunnel portals), sleepers may be replaced consecutively, at any temperature.

7.0.6.6 On track with continuous rails, resleepering with wood or steel sleepers can take place at any temperature below the maximum of range B. Resleepering with concrete sleepers can be undertaken up to the maximum of temperature range C in accordance with Annexure 16.

7.1 BALLAST

7.1.1 General

7.1.1.1 Ballast must comply with the latest specification.

7.1.1.2 Worn ballast must be replaced without delay.

7.1.1.3 Ballast from quarries must be checked at the source and loading point, and must be tested from time to time, to ensure that specified standards are complied with.

7.1.1.4 The volume of ballast in each truck must be measured before offloading to ensure that specified quantities are loaded at quarries. (Engineering technician)

7.1.1.5 Equal volumes must be off-loaded simultaneously from both sides of trucks. Ballast trucks that have been loaded or off-loaded disproportionately may derail and must not be send off.(Refer to WSWP for off-loading ballast)

7.1.1.6 Dimensions and quantities must be in accordance with **Annexures 3** and **4**.

7.1.1.7 Ballast must be clear of the rail flange and sleeper fastenings (except at level crossings). When off-loading, or whilst cleaning ballast, the top of the ballast must not be left higher than the underside of the crown of the running rail.

7.1.1.8 The flangeways between running rails and guard or check rails and between running rails and points rails, must be kept clear of ballast.

7.1.2 Ballast cleaning

7.1.2.1 The decision guidelines must be used to determine cleaning priorities. On track-circuited sections ballast must be kept clean.

7.1.2.2 All tracks, including turnouts, must be regarded when ballast is cleaned.

7.1.2.3 Special attention must be given to vertical and horizontal clearances.

7.1.2.4 No ballast screening work must be undertaken before level and line pegs have been provided. On completion, the vertical profile and clearances must be checked to ensure that work has been executed according to plan.

7.1.2.5 On track with continuous welded rail with:

- wood or steel sleepers, cleaning of ballast can take place when rail temperature is below the maximum of range B
- concrete sleepers, the work may continue until the maximum temperature of range C is reached.
- Special care must be taken against kick-outs when the temperature falls outside destressing range (range A).

7.1.2.6 A speed restriction of 30km/h must be imposed for the duration of the ballast work (including replenishment, tamping and profiling of ballast). The speed restriction may be increased to 50km/h after the work has been completed. The speed restriction must be maintained until the ballast has consolidated.

7.1.2.7 After the ballast has consolidated and tamping has been completed, the gaps at joint plated joints must be adjusted and continuous welded rails must be destressed.

7.1.3 Ballast cleaning by hand

7.1.3.1 **Clause 7.1.2** applies.

7.1.3.2 Cleaning of ballast 'between trains' (i.e. removing, cleaning and replacing the ballast) must be carried out under one sleeper at a time with 8 sleepers on either side correctly ballasted and tamped at all times. The ballast profile must be correct and must be tamped before work under the next sleeper is commenced.

7.1.3.3 If work cannot proceed as in **clause 7.1.3.2**, cleaning must be done under total occupation.

7.1.4 Ballast cleaning by machine

7.1.4.1 Clause 7.1.2 applies.

During screening of a curve it must be ensured that the whole curve is screened.

7.1.4.2 Work must be done under total occupation.

7.1.4.3 The track must be lifted sufficiently before screening commences if there is a possibility that the cutting chain might cut into the formation.

7.1.4.4 Boxing in of ballast must be done immediately behind the ballast cleaning machine. Additional ballast must be provided if necessary. The track must then be tamped, followed by a final tamp at a later stage, unless a stabiliser is used as part of the ballast screening process.

7.1.5 Ballast tamping

7.1.5.1 Track laid with continuous rails may only be tamped by the heavy ballast tamping machine within temperature range A. The full ballast profile must be maintained at all times when tamping is done above the upper limit of temperature range B.

7.1.5.2 During tamping, the Track Inspector Planning in charge of the section must ensure that there is sufficient ballast before tamping proceeds.

CHAPTER 8

CLEARANCES AND DIMENSIONS

8.0 MINIMUM CLEARANCES BETWEEN TRACK AND STRUCTURES

8.0.1 Structures next to 1 065mm gauge track must be clear of the limits indicated by the full lines in Annexure 1, sheets 1 to 3, except in the case of tunnels, workshop areas and temporary works. These clearances allow additional space for handling of material, for electrification purposes and for reducing the risk to persons working in close proximity to moving trains. These clearances may only be reduced in exceptional circumstances, with the approval of the Depot Engineering Manager .

8.0.2 Structures next to 610mm gauge track must be clear of the limits indicated by the full lines in Annexure 1, sheets 3 and 5.

8.0.3 Structures clear of the limits indicated by the dashed lines shown in Annexure 1, sheets 1 and 2 and clear of the full lines where no dashed lines are shown (i.e. platform level and below), are safely clear of passing trains. Temporary structures, tunnels and structures in workshop areas must not be closer to the track than that.

8.0.4 Horizontal clearances to the dashed lines in Annexure 1, sheet 1 are 300mm less than the tabulated values for horizontal clearance.

8.0.5 A structure, or any part of it which is adjacent to 1 065mm gauge track and which is not clear of the limits indicated by the dashed lines or full lines where no dashed lines are shown in Annexure 1, sheets 1 and 2, must be regarded as foul. Those parts of existing structures which are foul must be painted as described in clause 8.1. The same action must be taken in the case of a structure or any portion of a structure which is adjacent to a 610mm track and not clear of the full lines described in clause 8.0.2. No new structure which is added is allowed to be inside the dashed lines or full lines where no dashed lines are shown in Annexure 1, sheets 1 and 2.

8.0.6 A list of structure gauge fouling points must be obtained from the Depot Engineering Manager . The list will show the kilometre distances and measured clearances and heights of fouling points. The listed clearances may not be reduced.

8.0.7 Wires crossing non-electrified railway tracks must not be less than 6m above rail level.

8.0.8 Clearances for new structures are greater than those tabulated in Annexure 1. Details may be obtained from the Depot Engineering Manager .

8.0.9 The distances from platform edge to track centre line as shown in Annexure 1, sheet 3 are minimum distances and may be exceeded by up to 50mm.

8.0.10 The height indicated for high level platforms is the maximum allowable. Platforms may be no more than 40mm lower than this height. See Annexure 1, sheet 3.

8.0.11 Clauses 8.0.1 to 8.0.6 are also applicable to objects such as rocks protruding from the sides of cuttings.

8.0.12 Movement of rail traffic which could involve any exceedance of the Structure Gauge must be handled strictly in accordance with the Procedure for Approval of Abnormal Loads.

8.1 MARKING OF FOULING POINTS

A fouling point as defined in clause 8.0.5 must be painted with alternate black and yellow diagonal stripes each 200mm wide. The markings should cover an area of approximately 1 000 x 200 mm where practical, and be in the most conspicuous position when seen from an approaching train. In cases such as in tunnels, where the fouling point may be somewhere inside the tunnel, the entrance portals must be painted with stripes on the same side and at the same height as the fouling points.
Where the fouling point is an object such as a rock protruding from the side of a cutting and painting with stripes is impractical, it must be painted white.

8.2 ELECTRIFIED SECTIONS : HEIGHT OF CONTACT WIRE

8.2.1 The minimum height of the contact wire above rail level on 3kV sections is 4,22m. This may occur through old tunnels and at old bridges.

8.2.2 The minimum contact wire height on 25kV and 50kV sections is 4,5m.

8.2.3 At points where the contact wire is at or near minimum height, permanent reference pegs must be provided. The track must not be raised above peg level.

8.2.4 At level crossings the minimum height of the contact wire above rail level and the minimum clearances to be provided by height gauges are:-

Line Voltage KV	Minimum contact wire height Metre	Minimum clearance Mm
3	4,5	300
25	5,0	300
50	6,0	500

8.2.5 Measurement of the contact wire height is the responsibility of Electrical.

8.2.6 Before implementation of any deviation from the above standards, such intended deviation must be documented and approved by the Infrastructure Manager. After approval it must then be included in chapter 20 of this manual.

8.3 TRACK CENTRES

8.3.1 1 065mm gauge

8.3.1.1 Minimum distance between centres of parallel tracks 4m

8.3.1.2 Minimum distance between centres of parallel tracks with traction masts, telegraph poles, water columns, signal poles or parachute tanks 5,5m

8.3.1.3 In yards, up to 4 adjacent tracks may be at 4m centres. Distance to the next track 5,5m

8.3.1.4 Centres of tracks at clearance marks 3,45m

8.3.1.5 Minimum track centres at derailing devices 3,65m

8.3.2 610mm gauge

8.3.2.1 Minimum distance between centres of parallel tracks 3,4m

8.3.2.2 Minimum distance between centres of parallel tracks with telegraph poles, water columns, signal poles or parachute tanks 5m

8.3.2.3 Centres of tracks at clearance marks 2,75m

8.3.3 Also refer to circulars 50102 and 50118.

8.4 CLEARANCE MARKS

8.4.1 Clearance marks are placed between converging tracks to indicate where trains may safely pass.

8.4.2 The track personnel are responsible for providing and placing all clearance marks under all circumstances.

8.4.3 Clearance marks must be at least 1m in length and must be painted white. Scrapped concrete sleepers may, where practical, be used for this purpose. Clearance markers must be installed in such a way that the safety of walk ways are not adversely affected.

8.4.4 The webs of adjoining rails opposite the clearance mark as well as the upper surface of the first 'clear' sleepers must be painted white to serve as points of reference.

8.5 USEFUL DIMENSIONS

8.5.1 1 065mm gauge

8.5.1.1 The distance between wheel flanges varies from 992mm to 990mm. (The smaller dimension will be changed to 987mm in due course).

8.5.1.2 The distance between the two contact points for a new wheel-set on new rails (and on straight track) is 1 137mm. This distance will be changed to 1 151mm in due course.

8.5.1.3 Wheel width varies from 127mm to 135mm.

8.5.1.4 Wheel diameter can vary from 762mm to 1829mm.

8.5.1.5 Wheel flange projection (below rail level) may vary from 35mm to29mm.

8.5.1.6 The average floor height of loaded trucks (above rail level) is 1 030mm.

8.5.1.7 The available length in a DZ-truck is 13 800mm and 19 200mm in a DA-truck.

8.5.1.8 The distance between rail level and coupler centre line may vary from 910mm to 825mm. A 19mm open end spanner can be used to check sharp wheel flans.

8.5.2 610mm gauge

8.5.2.1 Distance between wheel flanges is 540mm.

8.5.2.2 Wheel diameter is 805mm.

8.5.2.3 The permissible wheel flange projection (below rail level) varies from 32mm to 25mm.

8.5.2.4 The average floor height of loaded trucks (above rail level) is 685mm.

8.5.2.5 The distance between rail level and coupler centre-line (for empty trucks) is 560mm.

8.5.3 Permissible axle loads

8.5.3.1 The Chief Engineer Infrastructure-Maintenance sets the permissible axle loads per line. Allowable axle loads is a function of train speed, the track structure and the bridge structures of the line.

8.5.3.2 Before the maximum permissible axle loads on a section is exceeded, the approval of the Chief Engineer(Infrastructure-Maintenance) must first be obtained.

CHAPTER 9

ASSOCIATED WORKS

9.0 TRACK SIGNS

Track signs must not foul the structure gauge and should, if possible, be placed further than the minimum distance from the centre line of the track.

9.1 GRADE AND KILOMETRE POSTS

9.1.1. Grade and kilometre posts should preferably be placed on the left-hand side of the line facing in the direction of increasing kilometre distance. Grade posts should be placed so that the figures can be seen by the driver of a locomotive. Posts should be placed approximately 3m from the centre line of the outermost track.

9.1.2. Kilometre posts must be maintained. Both the half and full kilometre posts must be kept clearly visible and readable.

9.1.3. Where vertical curves are longer than 120m, grade signs must be placed at the beginning and end of the vertical curve. The arm of the sign pointing to the line gradient must indicate this gradient, and the arm pointing to the vertical curve must be marked with a curved line indicating the direction of the curve.

9.2 PERMANENT SPEED RESTRICTION BOARDS

9.2.1 The fronts of the boards must be painted reflective yellow and indicate the permitted speed in black figures. Where there is doubt in regard to which track a board refers to, a black arrow pointing to the relevant track must be painted on the board. The back of the board must be painted reflective white, indicating the end of the speed restriction in the opposite direction. Where the back of a board cannot be clearly seen, it must be painted black and an additional (white) cancellation board must be provided.

9.2.2 Speed restriction boards must be erected as follows:

9.2.2.1 Different methods of displaying track signage (e.g. fixing to electrification masts and placing boards on poles next to the track) may not be combined in one specific track section.

9.2.2.2 Sections where a specific method will be applied must be selected in consultation with Operations.

9.2.2.3 On single and bi-directional lines boards may be fixed to masts on the left or right hand side of the track section.

9.2.2.4 On double lines, boards must be displayed on both sides of the track section and fixed to masts or poles, where no masts exist.

9.2.2.5 Boards must be fixed to the nearest electrification mast and at least 30m from where the speed restriction begins.

9.2.2.6 Boards must be fixed between 2m and 3m above rail level.

9.2.2.7 Electrical must supervise the fixing process.

9.2.3 On sections where boards cannot be fixed to electrification masts, they must be placed 30m before the speed restriction begins and on the right hand side of the track, as seen from approaching trains.

9.2.4 Grouping of speed restrictions on curved track over short distances is permissible, provided that the number of grouped curves does not exceed five, the distance over which the speed restriction applies does not exceed two kilometres, the lowest speed of the group is made applicable and speed restriction boards are erected only at each end of the group. Track in between two places from the speed restriction the cant must be adjusted according to the speed restriction. (refer to discussion on cant 4.1.4.1)

9.2.5 Where it is necessary to restrict the speed of trains through a station or a yard, or over a considerable distance, a rectangular notice board which should indicate or describe the extent to which the restriction applies, should be positioned adjacent to the permanent speed restriction board. The face of this notice board must be painted yellow and the back white. All lettering and figuring must be black. The normal cancellation board must be erected at the end of the restricted length.

9.2.6 Where turnouts are situated on curves and a speed restriction is necessary or where an unequal split turnout exists in a running line, two speed restriction boards must be erected on the same post 30m from the points. The upper board will indicate the maximum permissible speed over the through line, and the lower board the maximum permissible speed for the turnout.

9.2.7 In the case of an equal split turnout in a through line, a single speed restriction board must be erected. In the outgoing direction one board must be provided for each line. The backs of the boards must be painted black.

9.2.8 Where permanent speed restriction boards applicable to a station or yard have been erected as laid down in clause 9.2.5 hereof, speed restriction boards for turnouts may be unnecessary.

9.2.9 Where it is impractical to place permanent speed restriction boards 30m outside the points or place where the speed restriction begins, the boards should be erected in such a position as to give maximum visibility to the driver of an approaching train.

9.2.10 For further details refer to Annexure 10, sheet 1.

9.3 TEMPORARY TRACK SIGNS

9.3.1 Temporary speed restriction boards and associated boards indicating the start of the danger zone must comply with Annexure 10, sheet 2 and must be placed as shown in Annexure 10, sheet 3.

9.3.2 Except on the Coal Line where speed restrictions of 40 km/h may also be used, speed restrictions of 15, 30, 50 and 65 km/h only may be used.

9.3.3 In the case of tandem temporary speed restrictions only 30km/h and 50km/h boards are permitted.

9.3.4 When temporary speed restrictions are introduced on curves, cant must be adjusted according to Annexure 9, sheet 4. See clause 13.4.2 for electrified lines.

9.3.5 Where tamping machines off-track to enable train crossings or stage in section after work (on off-track platforms), tamping machine warning and crossing boards (see Annexure 10, sheet 2) must be used.

9.3.6 When temporary track signs are erected or removed, the train control centre/traffic controller must be informed in writing.

9.3.7 Temporary speed restriction boards which apply only during hours of duty must be completely removed at the end of each shift.

9.4 DISTANCE AND WARNING BOARDS

Distance and warning boards must be sited to give maximum visibility to the personnel of approaching trains. They should be approximately at right angles to the track, clear of the structure gauge and at distances as laid down in the rules applicable to the boards concerned.

9.5 WARNING SIGNS AT LEVEL CROSSINGS

9.5.1. Road warning signs at level crossings must be in accordance with the code, Signing for Railway Crossings, chapter 7, SARTSM, Vol. 2.

9.5.2. Track warning signs at level crossings must be erected in accordance with Clauses 9.2.2 and 9.2.3. The placement of the warning signs relative to the level crossing must be in accordance with Annexure 10 sheet 4.

9.5.3. The signs are ineffective if placed too high or not at the correct angle to the road. Their positions should therefore be checked by personal observation.

9.6 LEVEL CROSSINGS

9.6.1 Level crossings may not be constructed without the necessary authorisation.

9.6.2 At public level crossings, Transnet Freight Rail is responsible for the condition of the track(s) and the Roads Authority for the condition of roads over the track(s). (Also see clause 9.6.6 and 9.6.7)

9.6.3 In the case of pedestrian crossings, private crossings, obligatory private crossings, cattle crossings, unproclaimed or unnumbered public roads or unsurfaced private roads which are not controlled by a roads authority, Transnet Freight Rail is responsible for the maintenance of the section of road within the right of way.

9.6.4 Track at level crossings must be opened up and maintained whenever necessary and at least every two years. Prior arrangements must be made with the Roads Authority.

9.6.5 Unobstructed visibility must be maintained for both road and rail traffic at level crossings.

9.6.6 Where defects on the road surface at a level crossing are considered dangerous to rail or road traffic and require immediate attention, the Track Inspector (Maintenance Management) must inform the Roads Authority concerned and his controlling office immediately. Only if the Roads Authority is unable to undertake the required repairs without delay, must the Track Inspector (Maintenance Management) arrange for the repairs to be done and inform the Roads Authority as soon as possible thereafter of the remedial action taken.

9.6.7 No repairs to the road surface (except emergency work) may be undertaken without suitable prior arrangements. Repairs to the road surface within 3m of the centre line of track may be under taken by the Road Authorities, provided that the work does not affect the flange ways and that prior arrangements have been made with the Depot Engineering Manager ’s office. Whenever machinery (as opposed to hand tools) is to be used within 3m of the track centre line, prior arrangements must be made with the Depot Engineering Manager ’s office.

9.6.8 When maintenance to level crossings is to be undertaken, the supervisory personnel must ensure that all relevant parties involved are in attendance. Each party will bear its own costs.

9.6.9 When work is carried out on the track at a level crossing, care must be taken to interfere as little as possible with the use of the crossing.

9.6.10 Track Inspectors (Maintenance Management) must be supplied with the following information in respect of level crossings:

- Railway route,
- Kilometre distance,
- Name and/or number and status of road,
- Road Authority involved,
- Grades, office addresses and telephone numbers of personnel directly responsible for maintenance.

9.6.11 Roads crossing straight railway tracks should be level with the tops of the rails for a minimum distance of 3m from the outer rails.

9.6.12 The gradient of a road crossing a single curved railway track should follow the cant of the track (but not steeper than 1 in 15) for a minimum distance of 3m beyond the rails on both sides of the track.(see clause 9.6.14)

9.6.13 Where a road crosses two or more curved railway tracks, the grading of the road approaches will depend on local conditions, and should be decided upon on site.

9.6.14 Not withstanding the provisions of clauses 9.6.12 and 9.6.13, the grading of a road over a level crossing must be altered to suit road traffic patterns.

9.6.15 Under no circumstances may the width of the road at any level crossing be less than the width of the road which it serves.

9.6.16 Fishplated joints are not permitted on or within 6m of level crossings.

9.6.17 New level crossings must not be provided with guard rails. Where guard rails are not necessary at existing level crossings, they must be removed.

9.6.18 Precast concrete decks may be provided as a road surface.

9.6.19 The track over level crossings must be laid with rails of at least 48 kg/m and on either timber sleepers with E3131 cast iron chairs or concrete sleepers.

9.6.20 If any loaded vehicle comes into contact with a height gauge, the vehicle must not proceed before the load is lowered sufficiently to clear the height gauge.

9.7 SERVICE ROADS

9.7.1 Roads for maintenance purposes may be constructed as a working charge. Scrap concrete sleepers may be used for building causeways.

9.7.2 The Infrastructure Manager must sanction the construction of bridges, culverts and concrete drains.

9.7.3 Service roads must be maintained in good condition.

9.7.4 Track personnel may carry out minor repairs.

9.8 FENCING

9.8.1 Fences must be built and maintained according to the Transnet Freight Rail Fencing Strategy. New fences must be as per Annexure 29. Existing 6-wire fences must not be changed to 8-wire fences without approval.

9.8.2 Approved pre-fabricated fencing may be used.

9.8.3 Fence posts between cattle guards and the main fence must be of 6kg or 8kg standards.

9.8.4 Barbed wire must not be used where it may cause injury to persons.

9.8.5 Track personnel must close any gate that is found open at any private level crossings and report the circumstances to the controlling office.

9.8.6 Damage to fences and gates must be reported to Infrastructure Fault Control, giving the names and addresses of the responsible persons whenever possible.

9.9 CATTLE GUARDS

9.9.1 Cattle guards must be built to plan type I 124/1. They must be painted white and kept free of silt and vegetation.

9.9.2 Only hardwood sleepers must be used under cattle guards.

9.9.3 On track-circuited and electrified sections there must be no metallic contact between the cattle guards and the running rails. A minimum clearance of 50mm must be maintained between possible points of contact and not higher as the top of rail crown.

9.10 BEACONS

9.10.1 The law provides for severe penalties for interference with any land beacon.

9.10.2 Beacons on boundary lines or within the property of Transnet must not be moved or destroyed without the necessary authority.

9.10.3 Fence posts or fence anchors must not be placed less than 1m from a beacon. Where practical, fencing at corners should be splayed within the property of Transnet.

9.10.4 Excavations must not be closer than 1m to any beacon.

9.11 UNDERGROUND SERVICES

9.11.1 Track personnel must be careful not to damage underground services alongside or beneath railway tracks.

9.11.2 Care must be exercised when digging in the vicinity of buried electric cable routes. These are indicated by cable markers.

9.11.3 Cable markers may not be removed without authorisation.

9.11.4 Cables running parallel to the track must not be buried in the formation or ballast without the authority of the Infrastructure Manager.

9.11.5 Where there is danger of washouts, cables crossing streams may be buried in the bank behind wing walls and head walls of culverts.

9.11.6 Cables must return at right angles to the formation to serve telephones and signals.

9.11.7. New cables will be buried between 400mm and 750mm below the ground surface within a 4,5m wide strip along the fence and will be indicated by cable markers approximately 15m apart and fixed to the fence.

9.11.8 Pegs must not be driven within the cable reserve. Firebreaks and access roads may be made within the reserve. Scrap concrete sleepers must not be left within the cable reserve.

9.11.9 Where cables are required to cross service roads and are to be buried less than 800mm deep, they must be placed in pipes of galvanised iron ducting. At other road crossings the cables will pass through conduits.

9.11.10 Cables may be laid where necessary in station areas.

9.11.11 If a cable is taken through a tunnel, it must be in a conduit and clear of refuges.

9.12 COMMUNICATION ROUTES

If a telegraph pole is found in an unsafe condition, the Track Master must take whatever remedial measures are practical.
Unsafe poles, broken or slack wires and exposed underground cables must be reported without delay.

9.13 COMMUNICATIONS

9.13.1 Track teams must be supplied with the necessary radios, telephones and special keys to be able to communicate with station personnel, Operations or the traffic controller, as the case may be.

9.13.2 Track Inspectors must ensure that their personnel can operate the equipment.

9.14 BLASTING

9.14.1 When blasting is to be undertaken within 500m (protected with a notice issued out) of a railway line the Track inspector or his representative must be present and consult with the person responsible for the blasting work. He must carry out instructions in the notice and be prepared to stop trains and effect any repairs to the track which may be necessary.

9.14.2 If a Track inspector becomes aware that blasting is to take place within 500m of a railway line and he has not been officially advised, he must investigate and take appropriate measures including the stopping of blasting as he considers necessary to protect the property of Transnet.

9.15 FIRES

9.15.1 Track personnel must at all times take effective precautions against the outbreak of fire in accordance with this instruction, the Specification for Track Welding, the Work code for Prevention of Fires and any other relevant instruction.

9.15.2 They must assist in extinguishing uncontrolled fires.

9.15.3 They must report sparks and cinders coming from locomotives.

9.16 FIREBREAKS

9.16.1 The General Manager Rail Network will lay down policy and guidelines in respect of the removal of flammable material and the provision and maintenance of firebreaks. Such policy guidelines will be in accordance to National legislation and the rules of applicable Fire Protection Association.

9.16.2 After a veld fire has occurred:

- Cease all activities and apply all available personnel to assist combatting the veld fire.
- Try to restrict the veld fire to Transnet Freight Rail property.
- Notify the relevant Fire Protection Association, adjoining landowners in case assistance or evacuation is required.
- After the veld fire has been extinguished assemble precise notes of all relevant data pertaining to the veld fire e.g. time, date, probable cause, extent of damage to adjoining property, wind direction and photos.
- Under no circumstances should Transnet employees accept responsibility on behalf of Transnet Freight Rail in the event of veld fires spreading or causing damage to adjacent property. This may lead to differences between Transnet Freight Rail and its insurers, who may even refuse to settle arising claims.

9.16.3 The following precautions must be taken when firebreaks are made on the property of Transnet:

9.16.3.1 Fire break will be made in accordance to the rules of the applicable Fire Protection Association. The Depot Engineer / Engineering Manager must ensure that such a firebreak, with due regard to the weather, climate, terrain and the vegetation of the area:

(a) is wide enough and long enough to have a reasonable chance of preventing a veld fire from spreading from Transnet Freight Rail property or spreading to Transnet Freight Rail property.
(b) it does not cause soil erosion; and
(c) it is reasonably free of inflammable material capable of carrying a veld fire across it.

9.16.3.2 Making of firebreaks:

- Firebreaks may only be made in accordance to Chapter 4 of the National Veld and Forest Fire Act, Act 101 of 1998.
- Abide by the Fire Protection Association's constitution regarding the making of firebreaks irrespective of how and by whom firebreaks are made.

9.16.3.3 Fire may not be used as a vegetation control process in any vegetation control contract, unless it is a contract for the provision of firebreaks.

9.16.3.4 Every endeavour must be made to prevent the view of road users being obscured by smoke. Traffic control can also be contacted to give assistance.

9.17 PLANTS ON OR NEAR THE PROPERTY OF TRANSNET

9.17.1 Vegetation growing on the property or in the vicinity of Transnet must be removed or trimmed where it:

9.17.1.1 Prevents locomotive drivers from obtaining a clear view of track signs, level crossings and/or signals,

9.17.1.2 Prevents the public from obtaining a clear view of approaching trains at level crossings.

9.17.1.3 Obstructs the visibility of signals.

9.17.1.4 Constitute a risk to disrupt, or form a risk, damage or obstruct the railway network.

9.17.1.5 Where growth obstructing the visibility is situated on adjacent private property, permission must be obtained from the owner to trim or remove the obstruction(s).

9.17.2 All problem areas must be reported to the Technical Support Manager.

9.18 ERADICATION OF DECLARED WEEDS AND INVADER PLANTS

Competent guidance is required with the identification and control of declared weeds and invader plants. Report to the Technical Support Manager.

9.19 RODENTS

Track personnel must report the presence of animals burrowing in or near the formation, so that steps may be taken for their eradication. Report to the Technical Support Manager.

CHAPTER 10

TRACK MATERIAL, TOOLS AND EQUIPMENT

10.0 SAFE KEEPING

10.0.1 Track material, tools and equipment must be managed according to the latest manual.

10.0.2 Track Masters are responsible for the security of material, tools, and equipment issued to them. When not in use, tools must be kept under lock and key.

10.0.3 Track Masters must report any loss of material, tools and equipment. Any theft must be reported to the Asset Protection Services and Police (police case number).

10.0.4 Track material must not be left in the section any longer than necessary. It should be stored at an emergency camp or at a depot.

10.0.5 Property of Transnet must not be used for private purposes.

10.0.6 Track personnel must not buy or borrow any goods or property on behalf of Transnet, nor may they dispose of or lend any goods or property belonging to Transnet without written authority from Supply Chain Services in consultation with the Depot Engineering Manager and Infrastructure Manager.

10.1 STORAGE AND CARE OF MATERIAL

10.1.1 Material must be placed clear of the structure gauge, and must not be stacked within 3 metres of the centre line of the track. Stacking methods are described in SI(SMT)16/3/3B of October 1995.

10.1.2 To discourage theft, steel and wood sleepers must be stacked as far away as practical from level crossings and roads.

10.1.3 With the exception of wood sleepers and concrete, track material should not come into direct contact with ash when stacked.

10.1.4 The ground within 6m of a stack of wood sleepers must be cleared of all grass and weeds and the storage area must be well drained.

10.1.5 Wood sleepers, irrespective of condition, must be stacked in lots of no more than 50 and gaps of 40mm between sleepers accordance with Annexure 12. The stacks must be at least 3m apart.

10.1.6 Steel sleepers must be stacked clear of the ground, with alternate layers at right angles to each other. They must be stacked with bottoms facing down, in lots of no more than 100. To prevent the layers from rocking, two sleepers must be nested into one another at both ends of each layer.

10.1.7 Rails must be positioned upright on an even bed clear of traction bonds and supported to prevent kinking, bending and twisting.

10.1.8 Bags containing rail and sleeper fastenings must be stacked clear of the ground and if possible, under cover. Bolts and nuts must be oiled to prevent rust.

10.2 STOCKS

10.2.1 Material and tool stock levels will vary according to local conditions and must be approved by the Infrastructure Manager.

10.2.2 The Depot Engineering Manager (or delegated person) will arrange to order material for planned works and emergencies.

10.2.3 When taking over a length of track, the Track master must check the material, tools and equipment taken over by him, and send a list of these to the Depot Engineering Manager's Office.

10.2.4 Each Track master must control the material, tools and equipment issued to him and check his stock at least once a month.

10.2.5 When a Track master relinquishes a length he must check, the material, tools and equipment on hand, and send a list to the Depot Engineering Manager's office, explaining any discrepancies. A duplicate of this list must be left for the supervisor taking over the length.

10.2.6 Wood or steel sleepers or tie bars must be kept for emergencies. Insulation must be maintained on track-circuited lines.

10.2.7 Special emergency material and equipment must be provided for tunnels with track slabs. (See circular No. 50271).

10.2.8 Planned material must preferably not be used for unplanned work.

10.3 RELEASED TRACK MATERIAL

10.3.1 Rails

10.3.1.1 Classification

10.3.1.1.1 Used or second hand rails released from the track and to be reconditioned in workshops for re-use must comply with the rail classification requirements in Annexure 15, sheet 2 The class of rail is determined by the lowest classification indicator in this Annexure.

10.3.1.1.2 Before rails are removed from the section, they must be cut in accordance with Annexure 15 sheet 3 or longer if need be.

10.3.1.1.3 Second hand rails (other than reconditioned rails) may be used in running lines provided that:

- They have been ultrasonically tested and are found to be sound in all respects.
- They match existing rails for wear or will match after grinding and/or welding.
- The ends of the rails are cropped, by 300mm, to eliminate the old joint bolt holes.
- New joint plates are used if the joints are not welded.

10.3.1.1.4 Rails which are removed from the track because of the existence (or suspected existence) of transverse fissures, piping and rails with rail marks BB COS JAX 2496, 2297, 2497 must not be re-used.(refer to clause 6.14.9)

10.3.1.1.5 The quality of reconditioned rails is the responsibility of the welding workshops.

10.3.1.2 Rails intended for re-use must be transported in the longest possible lengths (or as required by the recipient) and cut accordingly. Depending on their intended future use:

10.3.1.2.1 Rails must be cut at welded joints in lengths as required - the cut must be made adjacent to the edge of the weld collar. Refer to Annexure 18.

10.3.1.2.2 rails consisting of 12m lengths joined by flash-butt welding must be cut through the flash-butt welded joints.

10.3.1.2.3 of 36m or long welded rails must be cut in accordance with Annexure 18, sheet 1.

10.3.1.2.4 may be flame cut only when they are released to welding depots for reconditioning or are scrapped.

10.3.1.3 Rails not required for re-use must be consigned as instructed by a representative of the Supply Chain Services or the depots and as follows:

10.3.1.3.1 No other material may be loaded into trucks with second hand rails.

10.3.1.3.2 The rails loaded into any truck should as far as possible be of the same nominal length. Pieces of rail less than 6,5m long must not be loaded into trucks containing longer rails.

10.3.1.3.3 Scrap rails must be loaded separately from useable material.

10.3.2 Wood sleepers

Refer to clauses 7.0.3.12 to 7.0.3.14.

10.3.3 Steel sleepers

Refer to clauses 7.0.4.6 to 7.0.4.7.

10.3.4 Refer to classification of concrete sleepers

10.4 TRACK GAUGES

10.4.1 Track gauges must be checked every six months via track inspector and log-sheet must be kept. The gauge must be measured against a steel tape, and the bubble adjustment checked by reversing the gauge over two points. Mark fix point take reading and turn gauge around and place at the same point and see if reading are the same. Defective gauges must be repaired or replaced.

10.4.2 All responsible persons using the track gauge must have it inspected before being used. Defective gauges must be repaired or replaced.

10.4.3 Only insulated types of track gauges may be used on electrified and track-circuited lines.

CHAPTER 11

TROLLEYS AND ON-TRACK MACHINES

11.0 NON SELF-PROPELLED TROLLEYS

11.0.1. A non self-propelled trolley is any hand-propelled device designed for the conveyance by rail of workmen, tools, material or equipment and includes push trolleys, trestle trolleys, rail transporters, light rail girders and other light machines or equipment that can easily be removed from the line by hand.

11.0.2. The person in charge of a trolley must be certified competent at School of Rail.

11.0.3. The person in charge of a trolley must also be certified competent in Train Working Rules as applicable to non-self propelled trolleys as well as Protection Rules.

11.0.4. The person in charge of the trolley must arrange work so as not to unnecessarily delay trains.

11.0.5. When a trolley is carrying any load which cannot be easily removed from the track, permission must first be obtained from the train control centre/traffic controller before the trolley may be placed on a running line. In such a case the person in charge of the trolley must obtain authority for an occupation from the train control centre/traffic-controller before placing the trolley on a running line.

11.0.6. Non self-propelled trolleys must not be operated at speeds higher than ordinary walking pace.

11.0.7. Before a non self-propelled trolley is used on track, the person in charge of the trolley must ensure that it is in a track worthy condition and the full serviceability of the handbrake must be ascertained. The person in charge of the trolley must ensure that the trolley is inspected by the Millwright on an approved log-sheet every 3 months.

11.0.8. The person in charge of a non self-propelled trolley must ensure that the flagman providing the protection for the trolley is well conversant with their protection duties and capable of executing them correctly.

11.0.9. A trolley must not be hauled or propelled by a train, except in an emergency. See clauses 11.2.8 en 11.2.13.

11.0.10. The person in charge of a trolley must have it under control at all times. He must warn personnel not to board a moving trolley from the front or the side and to watch for obstructions that may catch their feet.

11.0.11. The number of employees travelling on a trolley must not exceed the actual seating accommodation.

11.0.12. Employees must not stand on a trolley whilst it is in motion. This does not apply to employees operating a pump trolley.

11.0.13. The maximum load is 1800kg for 1065mm gauge and 1400kg for 610mm narrow gauge trolleys and trailers.

11.0.14. Only trolleys with insulated wheels may be used on track-circuited sections. Insulated trolleys must be periodically tested by Signals.

11.0.15. Trolleys not in use must be placed clear of the track structure gauge and adequate precautions must be taken to prevent it from being placed back within the structure gauge by unauthorised persons.

11.0.15. Coupling of trolleys

11.0.15.1. Coupling of trolleys is undesirable and should only be done when essential. Not more than two trolleys may be coupled together.

11.0.15.2. Two trolleys must not be run independently under the control of one person. They must be securely coupled.

11.0.16. Trolleys, level crossings, bridges and tunnels

11.0.16.1. Before attempting to cross a level crossing with a non selfpropelled trolley, the person in charge of that trolley must ensure that the level crossing is clear and that it will remain clear for the safe passing of the trolley and its load.

11.0.16.2. Before crossing a bridge by trolley, the person in charge must satisfy himself that a train is not approaching.

11.0.16.3. When a trolley is used through a tunnel, the person in charge of the trolley must, in addition to the prescribed protection measures, observe special precautions which are contained in clauses 11.0.1 to 11.0.14.

11.1 SELF-PROPELLED TROLLEYS

11.1.1. Self-propelled trolleys shall include motor trolleys, road rail vehicles and all on-track machines. The operating of self-propelled trolleys is covered in the General Trains Working rules/General Appendix and Rail Directives.

11.1.2. The person in charge of a self-propelled trolley must be in possession of effective means of communication for communicating with the train control centre/train traffic controller.

11.1.3. The person in charge of a self-propelled trolley being used on a running line, must be qualified and certificated in train operating as applicable to a train driver and he must be the holder of a valid Road Knowledge Certificate for that section of track.

11.1.4. A person must first be afforded an opportunity to re-acquaint himself with a section of line if he hasn't operated, piloted or worked a self-propelled trolley for a period exceeding 6 months over that section of line. After he has acquainted himself with the section of line and before he is placed in charge of a self-propelled trolley on that section of line, he must record and certify this acquired familiarity in the road knowledge book.

11.1.5. A self-propelled trolley equipped with an approved towage may be used to tow a trailer. (Refer to clause 11.0.12).

11.1.6. Trolleys must be maintained so that the requirements of clause 4.0.2 can be met.

11.1.7. The maintenance of each Self-propelled trolley must be entrusted to a specific individual. (Millwright)

11.1.8. The monthly inspection of Self-propelled trolleys must be carried out in accordance with RMD CODE 29 log-sheet.

11.1.9. Self-propelled trolleys must be inspected before each trip. An inspection manual is provided in the cabin of each Self-propelled trolley.

11.1.10. Self-propelled trolleys must be fitted with an independent emergency brake.

11.1.11. A back marker must be attached to the rear of each Self-propelled trolley and a yellow flashing light must be displayed continuously on its roof while it is operated.

11.1.12. A self-propelled trolley runs on a running line as a train and is therefore operated in accordance with the specific train working rules as applicable to the operation of trains.

11.1.13. Before attempting to cross a level crossing with a Self-propelled trolley, the person in charge of that Self-propelled trolley must ensure that the level crossing is clear and that it will remain clear for the safe passing of the Self-propelled trolley.

11.1.14. A self-propelled trolley may only be turned around after authority has been obtained from the train control centre/traffic controller. The Self-propelled trolley must be turned at a safe place which is free from obstructions, preferably on straight sections of track. The person in charge of that Self-propelled trolley must ensure that adequate protection is provided on all running lines of which the structure profile might be fouled during the turning process.

11.1.15. When a self-propelled trolley travelling, by day or night, on a running line, the headlights of the Self-propelled trolley must be switched on.

11.1.16. When a lighter type self-propelled trolley is used, attempt should not be made to run through a self normalizing turnout when moving through the turnout in the trailing direction without setting the points blades for the appropriate direction by hand. After passing over the turnout, the turnout points must once again be set to the normal position and locked.

11.1.17. A self-propelled trolley when in motion and stopping for inspection must be manned at all times.

11.1.18. A driver of a self-propelled trolley is not allowed to travel on his own (must be accompanied by a qualified assistant appointed for the trip).

11.1.19. When a self-propelled trolley is staged in the station or at depot the self-propelled trolley must be secured by scotch blocks and turnouts on either side and must be clamped.

11.2 OPERATING OF ROAD-RAIL VEHICLES

11.2.1. Before a road-rail vehicle may occupy a running line, that section of line must be clear of trains.

11.2.2. Only a person trained and in possession of a valid certificate for the operation of a road-rail vehicle shall be in charge of a road-rail vehicle when it is used on the track. This shall also apply when any part of the road-rail vehicle approaches within 3 meters from centre of track for placement on or removal from the track as well as for performing work on the track whilst standing adjacent to the track. The driver of an RRV is not allowed to travel on his own (must be accompanied by a qualified assistant appointed for the trip).

11.2.3. Only a person in possession of an appropriate and valid drivers licence and specifically authorized by the Depot Engineering Manager shall be allowed to drive a road-rail vehicle as a normal road vehicle.

11.2.4. For a road-rail vehicle to be used on a running line the person in charge of that vehicle must be qualified in trains operating as applicable to a train driver and he must be the holder of a valid Road Knowledge Certificate for that section off track.

11.2.5. The person in charge of a road-rail vehicle must be in possession of effective means of communication for communicating with the train traffic controller.

11.2.6. On sections where Colour Light Signalling or the Radio Train Order system or the Track Warrant system is used, a road-rail vehicle may be placed on, or be taken off a running line, at a level crossing or any other suitable place within that section of track.

11.2.7. Before the vehicle is placed on a running line, the person in charge of that vehicle must first obtain authorisation from the train control centre/train traffic controller. In the case of colour light signalling, he must then proceed strictly in accordance with the signal indications whilst in the case of the latter two train operating systems, he must be in possession of a valid token for that section of track. Such a token must be arranged between the train control centre/traffic controller and the person in charge of the road-rail vehicle.

11.2.8. In cases of any other trains operating system not mentioned in the preceding clause, the person in charge of the vehicle must obtain a valid token from the station or token-station as the case may be , before he may occupy a running line in that section of track.

11.2.9. Every time a road-rail vehicle is placed on a running line, the person in charge must obtain an instruction from the train traffic controller, which must indicate the time at which the road-rail vehicle must vacate the running line.

11.2.10. A road-rail vehicle fitted with an approved coupler may be used to tow a trailer on a running line.

11.2.11. A trailer/trolley may not be propelled (as opposed to being towed) except in an emergency, in which case special care must be taken. For this reason, a coupler must also be available on the front of the road-rail vehicle (Refer to clause 11.2.13)

11.2.12. When a trailer is towed on a running line by a road-rail vehicle, the total mass of the trailer (inclusive of its load) may not exceed 95% of the licensed gross vehicle mass of the road-rail vehicle. When the total vehicle mass of a trailer (inclusive of it's load), exceeds 50% of the road-rail vehicle's licensed gross vehicle mass, then the trailer may only be towed by the road-rail vehicle on a running line, provided that the trailer is equipped with a braking system which is operationally integrated with the braking system of the road-rail vehicle.

11.2.13. Unless otherwise specified inside the vehicle, the maximum allowable speed for a road-rail vehicle on a running line is 60km/h. The maximum allowable speed for a road-rail vehicle towing a trailer on a running line is 40km/h. Where a road-rail vehicle is used to tow a trailer on a running line of which the gradients are steeper than 1:100, additional safety precautions must be taken and the maximum speed further reduced. Weather conditions must be taken in consideration when travelling to reduce speed.

11.2.14. The rules must be read in conjunction with the rail directives.

11.2.15. A back marker must be attached to the rear of a road-rail vehicle or its trailer and a yellow flashing light must be displayed continuously on its roof while it is operated.

11.2.16. An emergency tow bar must be available on every road-rail vehicle at all times. This tow bar must be suitable for either towing or pushing the road-rail vehicle by a locomotive or other rail/road-rail vehicle in the event of an emergency.

11.3 RAIL TRANSPORTERS

11.3.1 Rail transporters must be protected and secured in the same manner as non self-propelled trolleys.

11.3.2 Loaded rail transporters may only be placed on a running line after authority has been obtained from the train control centre/traffic controller. The train control centre/traffic controller must ensure that the section of line is clear and remain clear of trains until the rail transporters are clear of the track.

11.3.3 For economic reasons, rail transporters should not be worked over long distances.

11.3.4 No person may ride on rail transporters or on the rails being transported.

11.3.5 Rail transporters must be manually propelled at walking pace.

11.3.6 On sections with colour light signalling, only insulated rail transporters may be used.

11.3.7 When two-axle type rail transporters are used:

11.3.7.1 Each unit must be examined by the Track master before use, to ensure that it is in working order and that the brakes are operating efficiently.

11.3.7.2 The load on a single two axle transporter must not exceed 7 250kg.

11.3.7.3 The rail stops provided must be inserted in the cross bearers before the rails are transported.

11.3.7.4 Under all circumstances all units must be equipped with hand brakes.

11.3.7.5 Rails must be centrally loaded on the cross bearer so that the brake handle is easily accessible.

11.3.8. Transporting 18m rails

11.3.8.1. Two rail transporters must be used at approximately one quarter of the rails' length from each rail end.

11.3.8.2. Not more than two layers of rails may be loaded on rail transporters. The rails in the bottom layer must be upright.

11.3.9. Transporting 36m rails

11.3.9.1. The distance between rail transporters must not exceed 9m and the end overhang must not exceed 4,5m.

11.3.9.2. Only one layer of rails may be loaded on rail transporters.

11.3.10. One-axle rail transporters

11.3.10.1. This type of rail transporters may not be used.

11.4 ON-TRACK MACHINES

11.4.1 The person in charge (Track inspector or Track master) must have passed the appropriate road knowledge, theoretical and practical examinations and must be licenced competent. Where a Track inspector/Track master has not worked in charge of the operation of an on-track machine for a period exceeding 1 year, he must first pass the appropriate practical on site re-test in as far as machine working, safe working responsibility and contract specifications are concerned, before he may be put in control of such an on-track machine.

11.4.2 A Track inspector/Track master in charge of an on-track machine must be practically re-tested on site, every 3 years, in so far as the machine working, safe working responsibility and contract specifications for that machine are concerned. The Depot Engineering Manager , in co-operation with the Central Office, must arrange for these tests.

11.4.3 The Production manager track is responsible for the training.

11.4.4 On-track machines must be managed by competent engineering personnel.

11.4.5 Productivity targets must be set for all on-track machines or groups of machines.

11.4.6 The use of these machines must be frequently discussed with all relevant departments.

CHAPTER 12

SIGNALS

12.0 INTRODUCTION

Track personnel must be acquainted with the functions and working of signalling equipment on their sections.

12.1 PROTECTION

When personnel from Track or Signals or Electrical have to work together, the Coordinator in Charge shall decide on who will be responsible for protection when it becomes necessary.

12.2 GENERAL

Special forums must be created at Central Office and at depots to co-ordinate long, medium and short term planning of maintenance activities.

12.3 INSULATING FASTENINGS

All instructions pertaining to the installation of insulating pads and fastenings must be followed implicitly. Care must be taken not to damage insulating materials.

12.4 SIGNALLING EQUIPMENT

12.4.1 Track Masters must keep the working parts of signalling equipment clear of obstructions and ensure that the area is well drained.

12.4.2 Track personnel must not interfere with signalling equipment which has been fastened to the track. (e.g. axle counters, hot box detectors etc)

12.4.3 Track masters must ensure that the routes of surface cables are kept clear of track material.

12.4.4 Defective signalling equipment must be reported without delay. Also see clauses 6.0.3 and 6.6.1.5.

CHAPTER 13

ELECTRICAL

13.0 DANGER OF COMING IN TO CONTACT WITH ELECTRICAL EQUIPMENT

13.0.1 Persons working closer than 3m to live overhead track equipment must be trained to be aware of the dangers involved as well as in the safe working procedures to be applied and the clearance distances they should observe. (Courses PWP 1 and PWP 2 are available).

13.0.2 All electrical equipment and all electric wires may be live and dangerous and must not be touched. Even loose or broken wires lying on the ground may still be live and must not be approached.

13.0.3 No person may climb any pole or structure which supports live overhead wires or electrical equipment.

13.0.4 No person may climb, ride or work on the roof or on top of any load or equipment carried on any rail or road vehicle (or any machine) under live overhead equipment.

13.0.5 Track personnel working on, above or near the track must take precautions to prevent tools, plant or any implements coming into contact with any portion of the overhead equipment or its connections, or making contact between the traction rail and the signal rail simultaneously.

13.1 RESCUE AND TREATMENT OF PERSONS SUFFERING FROM ELECTRIC SHOCK

13.1.1 Persons working near high voltage equipment should be trained to apply first aid in the event of shock cases.

13.1.2 The procedure to be followed in regard to the rescue and treatment of persons suffering from electric shock is contained in clause 103.9 and Annexure 1.1 of the Electrical Safety Instructions.

13.1.3 Personnel trained in the application of artificial respiration are stationed at strategic points throughout electrified areas. The positioning of these artificial respiration posts are indicated by a silver triangular sign with a blue centre.

13.1.4 It is recommended that all track personnel employed in areas where high-voltage electrical equipment is installed, take the first opportunity of qualifying in first-aid.

13.2 WORK UNDER "DEAD" CONDITIONS (power off condition)

13.2.1 Persons working near high voltage equipment must be aware of what work must be done under dead conditions, i.e. within a siding or under the cover of a work permit.

13.2.2 The responsible person in charge of work near high voltage equipment must understand and follow the correct procedures with regard to work permits.

13.3 WORK WHICH MAY BE DONE WHILE ELECTRICAL EQUIPMENT IS "LIVE" AND THE PRECAUTIONS TO BE TAKEN

13.3.1 Persons working near live high voltage equipment must be aware of the dangers and implement the necessary precautions.

13.3.2 Specific precautions are covered in the training courses PWP 1 and PWP 2 and are required for:

13.3.2.1 Handling of rigid material and wires.

13.3.2.2 Erecting of poles.

13.3.2.3 Use of cranes and machinery.

13.3.2.4 Use of measuring devices.

13.3.2.5 Work on the outside of rolling stock.

13.3.2.6 Handling of tarpaulins and

13.3.2.7 Supervision of contractors.

13.3.3 The electrical officer (in charge) must always be consulted on all these matters.

13.4 TRACK/MAST ALIGNMENT

13.4.1 Reference plates on electrification masts should be used to record the correct mast to rail distance. Track personnel must maintain the track in its correct alignment.

13.4.2 Before a track in an electrified section is lifted, lowered or slewed, or before the cant is altered, the responsible electrical officer or his authorised deputy must be notified. (Refer to clause 4.1.4.1)

13.5 TRACTION RETURN RAIL CIRCUIT

13.5.1 General caution

13.5.1.1 Unauthorised alterations to the traction bonding can result in high voltages which will be dangerous to personnel working on or near the track.

13.5.1.2 Connecting bonds must not be tampered with or disconnected. They must be kept clear of ballast, metal objects and tools. Track personnel must report any defect of or damage to electrical track equipment.

13.5.1.3 All jumper cables must be inspected for functionality on a six monthly basis by a competent person and the results of the inspection must be recorded on an official Log Sheet. Only functional jumper cables may be used at any time.

13.5.2 Rail bonds

13.5.2.1 A traction rail-to-rail joint bond consists of a length of flexible cable fixed to each rail at a joint.

13.5.2.2 Parallel tracks are connected at intervals by cross bonds.

13.5.2.3 On electrified sections the mast to rail bonds are part of the return circuit and must not be disconnected by unauthorised personnel, otherwise dangerous conditions may result.

13.5.3 Other bonds

13.5.3.1 These bonds (or parts of them) are normally painted red (except stray current drainage connectors - which are blue, and impedance bonds - which are not painted).

13.5.3.2 A spark gap, consisting of a red-painted dome bolted to a flat steel base plate, occurs at numerous points along an electrified line, (e.g. at steel footbridges, road bridges, water columns, goods sheds, station roof structures and certain traction masts). Spark gaps are connected to structures and to the traction rail by means of bonds.

13.5.3.3 At all substations large conductors connect the power supply to the rails.

13.5.3.4 On some AC-electrified sections the booster transformer's return conductor is carried on the track equipment masts on insulators and is connected to the rail at intervals of about 4km.

13.5.3.5 Stray current drainage connections connect buried pipes and other services to the negative return for electrical protection purposes.

13.5.3.6 Impedance bonds for signalling purposes are sometimes provided on electrified tracks. They are part of the traction return circuit.

13.5.4 Breaking of track circuits

13.5.4.1 No work on the track which involves interference with the traction return rail circuit either by cutting or removing the rails, or by removal of bonds may be done unless Electrical is consulted. Electrical will take such precautions as may be necessary to ensure continuity of the return circuit before permitting the work to commence. Track personnel who have been suitably trained and licensed instructed may apply approved jumpers as permitted in clause 2.13.7 and described herein.

13.5.4.2 Should it be necessary to break the track or disconnect any type of bond, the Depot Engineering Manager or his authorised Electrical deputy, must be advised in advance of this intention. Such work must not be started until an authorised employee of Electrical is available to supervise the work, or until this employee indicates that the work may proceed.

13.5.4.3 Because of the danger of electric shock on electrified sections, electrical continuity must first be provided. Electrical continuity is provided by means of a jumper cable between broken or joint plated rail ends, or by means of two jumper cables connecting the two ends of the closure rail to the running rail. It must be ensured that the jumper cables remain tight, because the return current can be lethal. (Refer to Annexure 20).

13.5.4.4 In emergencies, if no representatives from Electrical or Signals are available or can be consulted, temporary electrical continuity jumper cables must be fixed across the break where a rail has broken, where joint plates or track bonds must be removed or where a closure must be inserted. This must be done strictly in accordance with Annexure 20. Also refer to clause 2.13.6.and 2.13.7.

13.6 PREVENTION OF STRAY RETURN CURRENTS

13.6.1 Metallic objects must not be placed in contact with turnout rods, track equipment structures or any other metal structure attached to the running rails.

13.6.2 No metallic object or equipment in contact with the ground, e.g. fences, water pipes, etc. may be attached or connected to the overhead track equipment structures, to any metallic equipment associated with the track or to the rails.

13.6.3 Jumper cables must have a washer for identification and inspected via electrical department and the Millwright every 6 months (must have a log-sheet).

CHAPTER 14

TRAIN OPERATING

14.0 INTRODUCTION

In order to render a safe, affordable, dependable and predictable service, track personnel must ensure that the railway lines and associated works are always safe for the passage of trains.

14.1 PLANNING

14.1.1 Infrastructure must establish forums to co-ordinate short, medium and long term planning with interested departments.

14.1.2 Over exploitation must be prevented and the creation of excess capacity must not be allowed.

14.2 IRREGULARITIES/DEFECTS

14.2.1 Prompt action must be taken by track personnel when irregularities / defects are reported to them or come to their attention, in order to ensure the safety of trains, of clients, the public, co-workers and the environment.

14.2.2 The procedures for reporting/recording of irregularities/defects must be followed conscientiously by all concerned.

14.3 COMMUNICATION

Regular communication is necessary between track personnel and other employees involved with the running of trains. Track supervisors must ensure that adequate communication is maintained.

CHAPTER 15

WORK CODES TO BE USED BY TRACK PERSONNEL

Applicable work codes to be used by personnel.

15.0 BALLAST

15.0.1 Machine cleaning.
15.0.2 Hand cleaning

15.1 INSULATING JOINTS

15.1.1 Positioning and maintenance.
15.1.2 In-situ assembly

15.2 BRIDGES AND CULVERTS

15.2.1 Bridge code.
15.2.2 Handbook.
15.2.3 Inspection.

15.3 EARTHWORKS, FORMATION AND DRAINAGE

15.3.1 Inspection.
15.3.2 Drainage maintenance

15.4 CIVIL ENGINEERING

15.4.1 Handbook (green book).

15.5 TRACK

15.5.1 Geometric evaluation.
15.5.2 Manual for Managing Track Material.
15.5.3 Evaluation of material and track condition.
15.5.4 Tamping.
15.5.5 Screening machine.

15.6 RAILS

15.6.1 Repair of breaks.
15.6.2 Classification (ANNEXURE 15 Sheet 1 2 and 3)
15.6.3 Destressing.
15.6.4 Welding.
15.6.5 Ultrasonic and X-ray inspections.

15.7 SIGNS, LEVEL CROSSINGS AND FENCES

15.7.1 Inspection

15.8 TURNOUTS, SLIPS AND DIAMOND CROSSINGS

15.8.1 Construction manual.
15.8.2 Inspection.
15.8.3 Tamping.
15.8.4 Welding.
15.8.5 Condition evaluation.

15.9 CLEARANCES

15.9.1 Inspection.

CHAPTER 16

DECISION MODELS/GUIDELINES TO BE USED BY TRACK PERSONNEL

16.0 BALLAST

16.0.1 Determining cleaning priorities. Lowering of ballast (where applicable) and ensuring drainage repairs before screening.

16.0.2 Learner Track Master Training Modules

16.1 CONCRETE SLEEPERS

16.1.1 Treatment of alkaline aggregate reaction.

16.1.2 Replacing of pads, fastenings and gauge clips

16.2 TRACK

16.2.1 Determining of tamping cycles.

16.3 RAILS

16.3.1 Rail usage.

16.3.2 Re-use of second hand rails.

16.3.3 Workshop re-profiling.

16.3.4 In-track re-profiling.

16.3.5 Life span of rails. (Kanak to give guideline)

16.3.6 Destressing.

16.3.7 Replacing.

16.3.8 Transposing.

16.4 Turnout Maintenance Model

16.5 Derailment Investigations

16.6 Track Welding Manual

CHAPTER 17

RAIL / WHEEL INTERACTION

17.0 INTRODUCTION

17.0.1 As a result of the complex nature and high cost attributable thereto, the management of rail / wheel interaction has been placed under the joint management of senior Rolling Stock and Infrastructure personnel.

17.0.2 This chapter must be read in conjunction with relevant clauses in other chapters of this manual.

17.0.3 A few of the factors that influence rail / wheel interaction are briefly discussed in this chapter.

17.1 GEOMETRY

17.1.1 General

An improvement in the condition of track geometry will improve bogie tracking and will reduce the long term costs associated with the maintenance and relaying of the track.

17.1.2 Ballast

The dimensions shown in **Annexure 4** must be regarded as a minimum for critical points, such as the high legs of sharp curves, on bridges, tunnel entrances and sags of vertical curves.

17.1.3 Superelevation / cant

To reduce unbalanced lateral forces that affect the track structure, it is necessary to apply superelevation to the track. It must be applied in accordance with **Annexure 9, sheet 4** and **clause 4.1.4.**

17.1.4 Gauge

The tracking ability of bogies is reduced exponentially as gauge (due to wear) increases. Action must thus be taken well before maximum allowable gauge is reached. See clause 4.1.3

17.2 LUBRICATION

Lubrication is successful when the gauge corner of the high leg is sufficiently covered with an even layer of grease throughout the curve so that the rate at which rail side-wear occurs is reduced and that it takes place evenly over the whole length of a curve.

17.3 TRACKING

17.3.1 As vertical and horizontal irregularities are the main cause of bogie oscillation, special attention must be given to joint maintenance and all work must be performed in accordance with the latest work codes.

17.3.2 Forces transmitted to the track by rolling stock must be measured regularly when high rail wear and bogie oscillation occurs.

17.4 MOTIVE POWER AND SPEED

Although dynamic forces decrease as train speed is reduced, longitudinal forces transmitted to the track structure by locomotives are increased. Speed restrictions must be managed accordingly.

17.5 PROFILING

17.5.1 Rail profiling reduces surface defects and improves bogie tracking which in turn reduces flange contact and internal rail stresses.

17.5.2 A dramatic increase in rail life can be achieved when rail profiling, track geometry, lubrication, tracking and speed are managed optimally.

17.5.3 The rail profiling process is complex and must be managed by experts in this field. The latest decision guidelines / models must be used.

CHAPTER 18

PRIVATE SIDINGS

18.0 BACKGROUND

18.0.1 Seventy percent of Transnet Freight Rail's income can be linked directly to private sidings. The service to these important clients must be managed accordingly.

18.1 INTRODUCTION

18.1.1 Engineers and Engineering Technicians must acquaint themselves with the latest Manual for the **Provision and Maintenance of Private Sidings**.

18.1.2 Track Inspectors concerned with private sidings, must acquaint themselves with **part B** of the document and must be enabled to deliver the required level of service.

18.2 DEFINITIONS

18.2.1 A private siding is a railway track owned by the local authority, a company or a private person and is connected to the track of Transnet Freight Rail or the PRASA.

18.2.2 A siding is that portion of a private siding which is situated on land belonging to Transnet Freight Rail or the PRASA.

18.2.3 A siding extension is that portion of a private siding which is situated on land not belonging to Transnet Freight Rail or the PRASA.

18.3 AGREEMENTS

18.3.1 Each private siding is covered by an agreement between Transnet Freight Rail and the owner.

18.3.2 Location, ownership as well as construction and maintenance details are shown on the agreement plan which forms part of the private siding agreement.

18.3.3 An agreement between Transnet Freight Rail and the PRASA is required for private sidings connected to the PRASA's lines.

18.3.4 Track personnel who are involved with private sidings must be aware of the above and act accordingly.

18.4 MAINTENANCE

18.4.1 If the take-off turnout is leased, Transnet Freight Rail bears the cost of maintenance and the renewal of the turnout.

18.4.2 Where Transnet Freight Rail is responsible for maintenance, the responsible track personnel must ensure that the private siding is adequately maintained.

18.5 MATERIAL

18.5.1 Private siding owners must provide track material for the maintenance of their sidings.

18.5.2 Transnet Freight Rail will supply track material if it is necessary and can be supplied.

18.5.3 Material released from private sidings must be handed over to the siding owner in accordance with the stipulations of the Private Siding Agreement. A receipt is to be obtained and forwarded to the Depot Engineering Manager s office for official record keeping.

18.6 EMERGENCY WORK

Track personnel must complete all relevant documentation pertaining to emergency work undertaken on private sidings and forward it to the Depot Engineering Manager 's Office.

18.7 INSPECTIONS

18.7.1 The inspection of private sidings for renewal of right of access must be undertaken by the Track inspector.

18.7.2 Private sidings over which locomotives of Transnet Freight Rail operate must be inspected annually.

18.7.3 Private sidings over which locomotives of Transnet Freight Rail do not operate must be inspected every five years, prior to the renewal of the private siding agreements, unless -

18.7.3.1 Transnet Freight Rail is relieved of all obligations in respect of any portion of a private siding (this will be shown on the agreement plan);

18.7.3.2 a private siding owner furnishes an annual certificate signed by a Professional Engineer that the portion of the private siding not covered by the preceding paragraph is safe for the passage of vehicles, including locomotives, of Transnet Freight Rail.

18.7.4 The track personnel of Transnet Freight Rail may at all times inspect private sidings to satisfy themselves that they are safe for the passage of trains. Comprehensive inspections must be undertaken in accordance with a pre-determined programme and as far as possible be carried out in co-operation with the siding owner or his representative.

18.8 RAIL WEAR

18.8.1 Maximum permissible rail wear is as shown for class C rails in **Annexure 15, sheet 2**. Technology Management to issue A,B, C rail wear limits in due course.

18.8.2 Rails must be replaced when the maximum track gauge is reached and the gauge cannot be adjusted.

18.9 SLEEPERS

18.9.1 Approved sleepers may be used.

18.9.2 Concrete sleepers may be used in curves on private sidings as follows:

18.9.2.1 In running lines exceeding 1 km in length - minimum radius 240m and in running lines less than 1 km in length - minimum radius 140m.

18.9.2.2 In staging and shunting lines, minimum radius 140m.

18.9.2.3 On curves of radius less than 200m the appropriate gauge widening must be provided.

CHAPTER 19

Using the Lifting Frame to determine the Stress-Free rail temperature of CWR

Responsible person: Engineering Technician

19.1 Background

The lifting frame was developed at the Track Testing Centre (TTC) at George Goch. This frame can be used on 48, 57, S 60 and UIC 60 kg/m rails on concrete sleepers with Fist or Pandrol fasteners.

The lifting frame is used to determine the stress-free rail temperature of rails used in continuous welded sections.

The TTC does not take any responsibility for faulty readings or injuries if the lift frame is used in any other way than explained in this document.

19.2 The lift frame

The safe working load of the frame is 5 tons. The load frame consists of a basic frame of 38 mm square tubing, wall thickness of 2 mm, a hydraulic pump and ram with a gauge indicating tons. Fitted to the ram is a set of grips that hook to the foot of the rail as seen in Fig 19.1 below.

Fig 19.1: The Lifting Frame

19.3 The gauge

The short sub division indicates 0,04 tons, medium subdivisions 0,2 tons and long subdivisions 1 ton.

19.4 Basic principle

The frame can only be used when the rail is in tension. The frame is used to lift the rail 70mm while measuring the force needed to loft the rail. This reading is obtained from the gauge. The higher the tension force in the rail, the greater the force to lift the rail.

The reason why the rail is lifted 70 mm is to overcome the mass of the rail first before the tension force becomes into account. Because the 48, 57 S 60 and UIC 60 kg/m rails have

different masses per metre they are handled separately when the stress-free rail temperature is determined.

19.5 Additional parts of the frame

A rectangular steel block and spacer plates are supplied with the frame. This block and spacer plates are used when the frame is used on Pandrol fastenings. The block is necessary to take up the gap from the grips to the base of the rail on a Pandrol fastening system. On a Fist system the block is not necessary. The ram can extent only 85, 5 mm and therefore the block must be used with Pandrol fastenings to make up the gap between the grips and the base of the rail.

19.6 The 70 mm measuring plate

On the cross bar at the top of the frame, a thin steel plate is fixed with a wing nut. This plate can move up or down. From the bottom of the plate 70 mm up, a thin line is marked. This is used to determine when the rail is lifted 70 mm.

19.7 Tables for determining the stress-free temperature of a rail

Attached to this document tables are given for the 48, 57, S 60 and UIC 60kg.m rails to be used with the loft frame.

19.8 Working procedure

19.8.1 The places where the stress-free temperature of the rail must be determined is marked. This must be between sleepers.

19.8.2 From this mark 10 m is marked out in each direction along the rail. This totals 20 m with the point where the stress-free rail temperature is to be determined, in the middle.

When a 10 m mark fails between two sleepers, the next sleeper must be marked (furthest from the middle).

19.8.3 Two thermometers are placed on the inner and outside of the web of the rail to determine the rail temperature. The average between the two readings is taken as the rail temperature.

19.8.4 After arrangement and conformation for sufficient time between trains (15 min.) the 20m rail is loosened. The rail must be loosened in such a way to make sure that the rail

is lifted freely. The lift frame is positioned as depicted in figure 1 above the rail. For Pandrol fastenings the steel block must be placed on the grips.

19.8.5 The grips are lifted with the hand pump until they touch the base of the rail. The 70 mm measuring plate is then positioned such that the bottom of the plate is lined up with the top cross bar of the grips, and then locked with the wing nut.

19.8.6 The rail then is lifted by means of the hand pump until the top of the cross bar of the grips is in line with the 70 mm reference line. The rail is then lowered into its original position by regulating the valve on the hand pump. This is to distribute the stresses in the rail evenly over the 20 m length of rail. The grips are again lifted until they touch the base of the rail and the measuring plate is positioned as mentioned in 8.5.

19.8.7 The rail is again lifted until the top of the cross bar of the grips is in line with the 70 mm reference line. The needle on the gauge is noted. It will tend to drop backwards and stabilise after a few seconds. When it has stabilised the reading is noted.

19.8.8 The rail temperature is obtained from the average of the two thermometers.

19.8.9 The tables are used to establish the stress-free rail temperature. The following example is given:

Rail temperature:	19º
Rail mass:	57 kg/m
Gauge reading:	1,6 tons

The stress-free rail temperature from the table will be 34ºC.

19.8.10 The different rails will experience the following forces / ºC.

48 kg/m	1,42 tons / ºC.
57 kg/m	1,73 tons / ºC.
S60 kg/m	1,82 tons / ºC.
UIC60 kg/m	1,82 tons / ºC.

19.8.11 The following equations can be used if tests are analysed with a spread sheet program:

$$\text{Stress -free rail temp.} = \frac{P - 1{,}312334}{0{,}022375} + \text{rail temperature} \quad \text{(S60 kg/m)}$$

$$\text{Stress -free rail temp.} = \frac{P - 1{,}432184}{0{,}022151} + \text{rail temperature} \quad \text{(UIC60 kg/m)}$$

$$\text{Stress -free rail temp.} = \frac{P - 1{,}282537}{0{,}020954} + \text{rail temperature} \quad \text{(57 kg/m)}$$

$$\text{Stress -free rail temp.} = \frac{P - 1{,}009323}{0{,}022321} + \text{rail temperature} \quad \text{(48 kg/m)}$$

P = Gauge reading

19.9 Safety

19.9.1 If the load frame is used in a curve the radius of the curve must not be less than 500 m.

19.9.2 The frame must be positioned in such a way that the hand pump is on the outside of the curve. This is to prevent injury if the forces in the rail are so high that the rail will tend to straighten if it is lifted. It is recommended that the rail temperature must be between 5ºC and 20ºC when tests on curves and tangents are done.

19.9.3 According to Transnet safety personnel it is not necessary to check the frame annually. The gauge will be checked annually by the Technology Management (TTC) for calibration.

19.9.4 At all times when the load frame is stored or moved precaution must be taken to make sure that the gauge is not damaged. This will lead to faulty readings.

Table 19.1: Stress Free Temperature (40kg/m)

		RAIL TEMPERATURE (ºC)																	
		5	7	9	11	13	15	17	19	21	23	25	27	29	31	33	35	37	39
P (ton)	0.75	5	7	9	11	13	15	17	19	21	23	25	27	29	31	33	35	37	39
	0.80	9	11	13	15	17	19	21	23	25	27	29	31	33	35	37	39	41	43
	0.85	13	15	17	19	21	23	25	27	29	31	33	35	37	39	41	43	45	47
	0.90	17	19	21	23	25	27	29	31	33	35	37	39	41	43	45	47	49	51
	0.95	21	23	25	27	29	31	33	35	37	39	41	43	45	47	49	51	53	55
	1.00	25	27	29	31	33	35	37	39	41	43	45	47	49	51	53	55	57	59
	1.05	29	31	33	35	37	39	41	43	45	47	49	51	53	55	57	59	61	63
	1.10	33	35	37	39	41	43	45	47	49	51	53	55	57	59	61	63	65	67
	1.15	37	39	41	43	45	47	49	51	53	55	57	59	61	63	65	67	69	71
	1.20	41	43	45	47	49	51	53	55	57	59	61	63	65	67	69	71	73	75
	1.25	45	47	49	51	53	55	57	59	61	63	65	67	69	71	73	75	77	79
	1.30	49	51	53	55	57	59	61	63	65	67	69	71	73	75	77	79	81	83
	1.35	53	55	57	59	61	63	65	67	69	71	73	75	77	79	81	83	85	87
	1.40	57	59	61	63	65	67	69	71	73	75	77	79	81	83	85	87	89	91
	1.45	61	63	65	67	69	71	73	75	77	79	81	83	85	87	89	91	93	95
	1.50	65	67	69	71	73	75	77	79	81	83	85	87	89	91	93	95	97	99
	1.55	69	71	73	75	77	79	81	83	85	87	89	91	93	95	97	99	101	103

P = Force to lift rail 70mm

Table 19.2: Stress Free Temperature (48kg/m)

		RAIL TEMPERATURE (ºC)																	
		5	7	9	11	13	15	17	19	21	23	25	27	29	31	33	35	37	39
P (t)	1.10	9	11	13	15	17	19	21	23	25	27	29	31	33	35	37	39	41	43
	1.15	11	13	15	17	19	21	23	25	27	29	31	33	35	37	39	41	43	45
	1.20	13	15	17	19	21	23	25	27	29	31	33	35	37	39	41	43	45	47
	1.25	15	17	19	21	23	25	27	29	31	33	35	37	39	41	43	45	47	49
	1.30	17	19	21	23	25	27	29	31	33	35	37	39	41	43	45	47	49	51
	1.35	20	22	24	26	28	30	32	34	36	38	49	42	44	46	48	50	52	54
	1.40	22	24	26	28	30	32	34	36	38	49	42	44	46	48	50	52	54	56
	1.45	24	26	28	30	32	34	36	38	49	42	44	46	48	50	52	54	56	58
	1.50	26	28	30	32	34	36	38	49	42	44	46	48	50	52	54	56	58	60
	1.55	28	30	32	34	36	38	49	42	44	46	48	50	52	54	56	58	60	62
	1.60	30	32	34	36	38	49	42	44	46	48	50	52	54	56	58	60	62	64
	1.65	32	34	36	38	49	42	44	46	48	50	52	54	56	58	60	62	64	66
	1.70	34	36	38	49	42	44	46	48	50	52	54	56	58	60	62	64	66	68
	1.75	36	38	49	42	44	46	48	50	52	54	56	58	60	62	64	66	68	70
	1.80	39	41	43	45	47	49	51	53	55	57	59	61	63	65	67	69	71	73
	1.85	41	43	45	47	49	51	53	55	57	59	61	63	65	67	69	71	73	75
	1.90	43	45	47	49	51	53	55	57	59	61	63	65	67	69	71	73	75	77
	1.95	45	47	49	51	53	55	57	59	61	63	65	67	69	71	73	75	77	79
	2.00	47	49	51	53	55	57	59	61	63	65	67	69	71	73	75	77	79	81
	2.05	49	51	53	55	57	59	61	63	65	67	69	71	73	75	77	79	81	83
	2.10	51	53	55	57	59	61	63	65	67	69	71	73	75	77	79	81	83	85
	2.15	53	55	57	59	61	63	65	67	69	71	73	75	77	79	81	83	85	87
	2.20	55	57	59	61	63	65	67	69	71	73	75	77	79	81	83	85	87	98
	2.25	58	60	62	64	66	68	70	72	74	76	78	80	82	84	86	88	90	92
	2.30	60	62	64	66	68	70	72	74	76	78	80	82	84	86	88	90	92	94
	2.35	62	64	66	68	70	72	74	76	78	80	82	84	86	88	90	92	94	96
	2.40	64	66	68	70	72	74	76	78	80	82	84	86	88	90	92	94	96	98

P = Force to lift rail 70 mm

Table 19.3: Stress Free Temperature (57kg/m)

		RAIL TEMPERATURE (ºC)																	
		5	7	9	11	13	15	17	19	21	23	25	27	29	31	33	35	37	39
P (ton)	1.35	8	10	12	14	16	18	20	22	24	26	28	30	32	34	36	38	40	42
	1.40	11	13	15	17	19	21	23	25	27	29	31	33	35	37	39	41	43	45
	1.45	13	15	17	19	21	23	25	27	29	31	33	35	37	39	41	43	45	47
	1.50	15	17	19	21	23	25	27	29	31	33	35	37	39	41	43	45	47	49
	1.55	18	20	22	24	26	28	30	32	34	36	38	40	42	44	46	48	50	52
	1.60	20	22	24	26	28	30	32	34	36	38	49	42	44	46	48	50	52	54
	1.65	22	24	26	28	30	32	34	36	38	49	42	44	46	48	50	52	54	56
	1.70	25	27	29	31	33	35	37	39	41	43	45	47	49	51	53	55	57	59
	1.75	27	29	31	33	35	37	39	41	43	45	47	49	51	53	55	57	59	61
	1.80	29	31	33	35	37	39	41	43	45	47	49	51	53	55	57	59	61	63
	1.85	32	34	36	38	49	42	44	46	48	50	52	54	56	58	60	62	64	66
	1.90	34	36	38	49	42	44	46	48	50	52	54	56	58	60	62	64	66	68
	1.95	36	38	49	42	44	46	48	50	52	54	56	58	60	62	64	66	68	70
	2.00	39	41	43	45	47	49	51	53	55	57	59	61	63	65	67	69	71	73
	2.05	41	43	45	47	49	51	53	55	57	59	61	63	65	67	69	71	73	75
	2.10	43	45	47	49	51	53	55	57	59	61	63	65	67	69	71	73	75	77
	2.15	46	48	50	52	54	56	58	60	62	64	66	68	70	72	74	76	78	80
	2.20	48	50	52	54	56	58	60	62	64	66	68	70	72	74	76	78	80	82
	2.25	50	52	54	56	58	60	62	64	66	68	70	72	74	76	78	80	82	84
	2.30	53	55	57	59	61	63	65	67	69	71	73	75	77	79	81	83	85	87
	2.35	55	57	59	61	63	65	67	69	71	73	75	77	79	81	83	85	87	89
	2.40	57	59	61	63	65	67	69	71	73	75	77	79	81	83	85	87	89	91

P = Force to lift rail 70 mm

Table 19.4: Stress Free Temperature (UIC 60kg/m)

		RAIL TEMPERATURE (ºC)																	
		5	7	9	11	13	15	17	19	21	23	25	27	29	31	33	35	37	39
P (ton)	1.44	5	7	9	11	13	15	17	19	21	23	25	27	29	31	33	35	37	39
	1.48	7	9	11	13	15	17	19	21	23	25	27	29	31	33	35	37	39	41
	1.52	8	10	12	14	16	18	20	22	24	26	28	30	32	34	36	38	40	42
	1.56	10	12	14	16	18	20	22	24	26	28	30	32	34	36	38	40	42	44
	1.60	12	14	16	18	20	22	24	26	28	30	32	34	36	38	40	42	44	46
	1.64	13	15	17	19	21	23	25	27	29	31	33	35	37	39	41	43	45	47
	1.68	15	17	19	21	23	25	27	29	31	33	35	37	39	41	43	45	47	49
	1.72	16	18	20	22	24	26	28	30	32	34	36	38	40	42	44	46	48	50
	1.76	18	20	22	24	26	28	30	32	34	36	38	40	42	44	46	48	50	52
	1.80	20	22	24	26	28	30	32	34	36	38	40	42	44	46	48	50	52	54
	1.84	21	23	25	27	29	31	33	35	37	39	41	43	45	47	49	51	53	55
	1.88	23	25	27	29	31	33	35	37	39	41	43	45	47	49	51	53	55	57
	1.92	24	26	28	30	32	34	36	38	40	42	44	46	48	50	52	54	56	58
	1.96	26	28	30	32	34	36	38	40	42	44	46	48	50	52	54	56	58	60
	2.00	28	30	32	34	36	38	40	42	44	46	48	50	52	54	56	58	60	62
	2.04	29	31	33	35	37	39	41	43	45	47	49	51	53	55	57	59	61	63
	2.08	31	33	35	37	39	41	43	45	47	49	51	53	55	57	59	61	63	65
	2.12	32	34	36	38	40	42	44	46	48	50	52	54	56	58	60	62	64	66
	2.16	34	36	38	40	42	44	46	48	50	52	54	56	58	60	62	64	66	68
	2.20	36	38	40	42	44	46	48	50	52	54	56	58	60	62	64	66	68	70
	2.24	37	39	41	43	45	47	49	51	53	55	57	59	61	63	65	67	69	71
	2.28	39	41	43	45	47	49	51	53	55	57	59	61	63	65	67	69	71	73
	2.32	40	42	44	46	48	50	52	54	56	58	60	62	64	66	68	70	72	74
	2.36	42	44	46	48	50	52	54	56	58	60	62	64	66	68	70	72	74	76
	2.40	44	46	48	50	52	54	56	58	60	62	64	66	68	70	72	74	76	78
	2.44	45	47	49	51	53	55	57	59	61	63	65	67	69	71	73	75	77	79
	2.48	47	49	51	53	55	57	59	61	63	65	67	69	71	73	75	77	79	81
	2.52	48	50	52	54	56	58	60	62	64	66	68	70	72	74	76	78	80	82
	2.56	50	52	54	56	58	60	62	64	66	68	70	72	74	76	78	80	82	84
	2.60	51	53	55	57	59	61	63	65	67	69	71	73	75	77	79	81	83	85

P = Force to lift rail 70 mm

Table 19.4: Stress Free Temperature (S 60kg/m)

		RAIL TEMPERATURE (ºC)																	
		5	7	9	11	13	15	17	19	21	23	25	27	29	31	33	35	37	39
P (ton)	1.40	9	11	13	15	17	19	21	23	25	27	29	31	33	35	37	39	41	43
	1.44	11	13	15	17	19	21	23	25	27	29	31	33	35	37	39	41	43	45
	1.48	12	14	16	18	20	22	24	26	28	30	32	34	36	38	40	42	44	46
	1.52	14	16	18	20	22	24	26	28	30	32	34	36	38	40	42	44	46	48
	1.56	16	18	20	22	24	26	28	30	32	34	36	38	40	42	44	46	48	50
	1.60	18	20	22	24	26	28	30	32	34	36	38	40	42	44	46	48	50	52
	1.64	20	22	24	26	28	30	32	34	36	38	40	42	44	46	48	50	52	54
	1.68	21	23	25	27	29	31	33	35	37	39	41	43	45	47	49	51	53	55
	1.72	23	25	27	29	31	33	35	37	39	41	43	45	47	49	51	53	55	57
	1.76	25	27	29	31	33	35	37	39	41	43	45	47	49	51	53	55	57	59
	1.80	27	29	31	33	35	37	39	41	43	45	47	49	51	53	55	57	59	61
	1.84	29	31	33	35	37	39	41	43	45	47	49	51	53	55	57	59	61	63
	1.88	30	32	34	36	38	40	42	44	46	48	50	52	54	56	58	60	62	64
	1.92	32	34	36	38	40	42	44	46	48	50	52	54	56	58	60	62	64	66
	1.96	34	36	38	40	42	44	46	48	50	52	54	56	58	60	62	64	66	68
	2.00	36	38	40	42	44	46	48	50	52	54	56	58	60	62	64	66	68	70
	2.04	38	40	42	44	46	48	50	52	54	56	58	60	62	64	66	68	70	72
	2.08	39	41	43	45	47	49	51	53	55	57	59	61	63	65	67	69	71	73
	2.12	41	43	45	47	49	51	53	55	57	59	61	63	65	67	69	71	73	75
	2.16	43	45	47	49	51	53	55	57	59	61	63	65	67	69	71	73	75	77
	2.20	45	47	49	51	53	55	57	59	61	63	65	67	69	71	73	75	77	79

P = Force to lift rail 70 mm

RAIL STRESS MEASUREMENTS RESULTS ANALYSIS AND INTERPRETATION

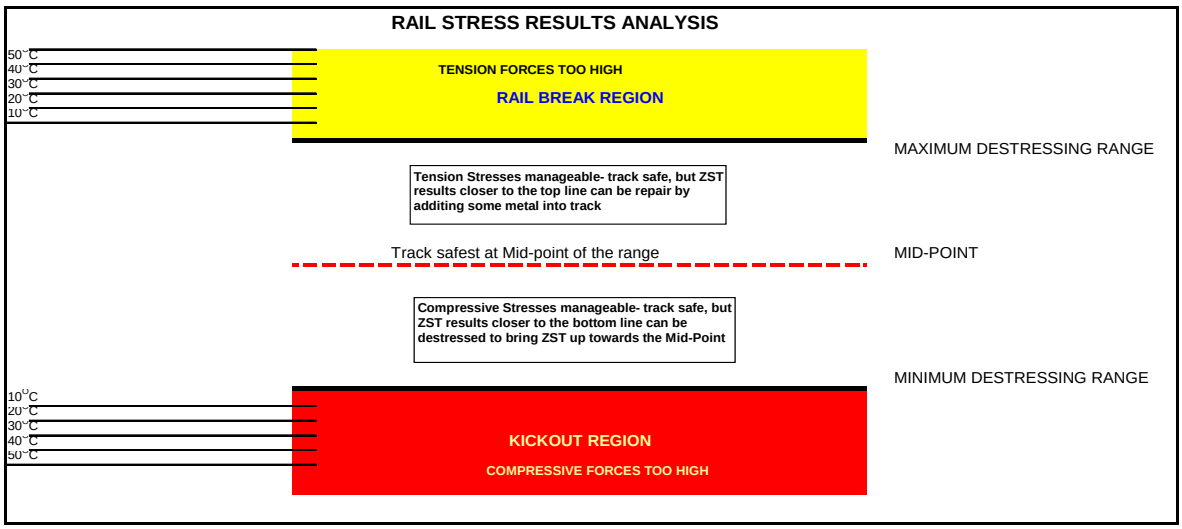

Figure 19.2: Rail Stress Results Analysis

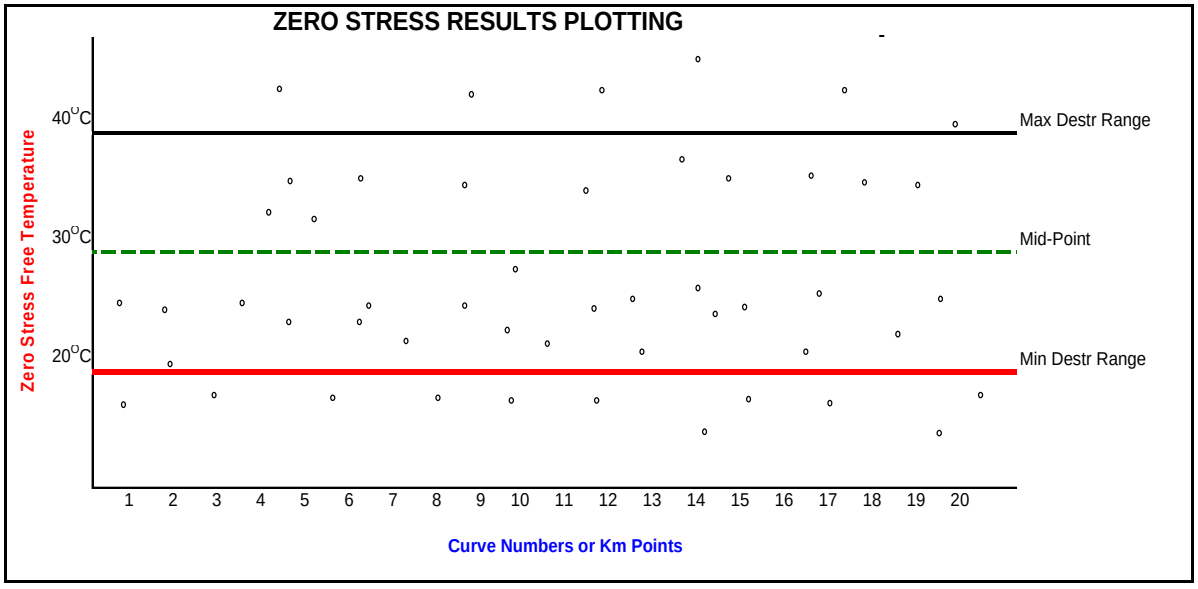

Figure 19.3: Zero Stress Results Plotting

Figure 19.2 & 19.3

(1) Rail is Stress-free at Mid-point of the range and therefore no need to de-stress rail.

(2) Any rail with calculated Zero Stress Temperature below the Minimum Destressing Range must take first priority in the destressing planning programme.

(3) Track is still safe for kickouts when Zero Stress result falls between the mid-point and minimum distressing range, however destressing can be done on all curves with ZST closer to the minimum range so as to bring it up towards the mid-point and make track even safer.

(4) Any result below the minimum range indicates that your track is under compressive forces and therefore the possibility of a kickout is greater.

(5) The results above the mid-point but below the maximum destressing range indicates that the track is still safe against a rail break. However, some steel can be added into the track to make it even safer.

(6) If the ZST is above the maximum destressing range, a rail break possibility is greater, and the track is in dire need of extra steel. You can add steel by cutting the track and putting a closure rail for instance or through tamping by pulling the curve inside a bit.

(7) A curve with ZST below the minimum range is in compression while any curve with ZST above the maximum range will be indicating tensile stresses.

CHAPTER 20

DETAILED MEASUREMENT FOR SLACKS AND KICKOUTS REPAIRS

20. 1 Slacks

Table 20.1A: Minimum distance (m) between two points for a specific difference in cant

	A-standard		B-standard	C-standard
	3 mm		8 mm	12 mm
Difference in readings or sum of readings (mm)	Straight track and circular curves (m) 1:1000	Transition curves (m) 1:500	All track (m) 1:400	All track (m) 1:288
1	1	0,5	0.4	0,3
2	2	1,0	0,8	0,6
3	3	1,5	1,2	0,9
4	4	2,0	1,6	1,2
5	5	2,5	2,0	1,5
6	6	3,0	2,4	1,8
7	7	3,5	2,8	2,0
8	8	4,0	3,2	2,3
9	9	4,5	3,6	2,6
10	10	5,0	4,0	2,9

Table 20.1B

20	20	10	8	5,8
30	30	15	12	8,7
40	40	20	16	11,6
50	50	25	20	14,4
60	60	30	24	17,3
70	70	35	28	20,2
80	80	40	32	23,0
90	90	45	36	26,0
100	100	50	40	28,8

Example : For 44mm difference in cant on straight track the two points must be 40 m (table 20.1B + 4m (Table 20.1A) = 44 m apart to comply with the A-standard, or 16 m (table 20.1B) + 1,6 m (table 20.1A) = 17,6 m apart for the B-standard.

20.1.1 To comply with the A-, B- or C-standard the cant at any point must not differ by more than the following values from the specified cant:

A-standard	3 mm
B-standard	12 mm
C-standard	16 mm

20.2 Kinks

20.2.1 To comply with A- B- or C-standards the middle-ordinate “e” must not exceed the Values in table 1 for a chord length “L” strung between M and N

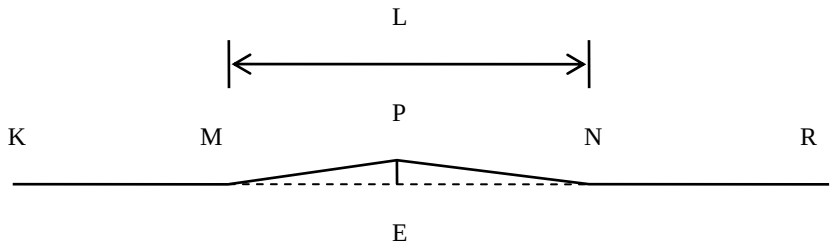

Figure 20.1: Kink

Table 20.2: Kink

L (m)	A - Standard "e" max. (mm) 1:2000	B - Standard "e" max. (mm) 1:500	C - Standard "e" max. (mm) 1:360
1	0	1	1
2	0	2	2
3	0	3	4
4	1	4	5
5	1	5	7
6	1	6	8
7	1	7	9
8	2	8	11
9	2	9	12
10	2	10	14

The kink at the beginning or end of a long horizontal misalignment in a straight track must meet the requirements of clause 4.1.1.4.1.

To comply with the A- B- or C-standards the difference between the average middle-ordinate of a circular and transition curve measured from a 10 m chord and the mid-ordinate of any point on the same curve must not exceed the values shown in table 20.3A – 20.3B – 20.3C

TABLE 20.3A: A-Standard

Average mid-ordinate (mm)	Permissible difference (mm)
1 to 9	+/-2
10 to 29	+/-3
30 to 49	+/-4
50 to 69	+/-5

70 to 89	+/-6
90 and more	+/-7

TABLE 20.3B: B-Standard

Average mid-ordinate (mm)	Permissible difference (mm)	Average mid-ordinate (mm)	Permissible difference (mm)
1 to 2	+/-2	48 to 52	+/-12
3 to 7	+/-3	53 to 57	+/-13
8 to 12	+/-4	58 to 62	+/-14
13 to 17	+/-5	63 to 67	+/-15
18 to 22	+/-6	68 to 72	+/-16
23 to 27	+/-7	73 to 77	+/-17
28 to 32	+/-8	78 to 82	+/-18
33 to 37	+/-9	83 to 87	+/-19
38 to 43	+/-10	88 and more	+/-20
44 to 47	+/-11		

TABLE 20.3C: C-Standard

Average mid-ordinate (mm)	Permissible difference (mm)	Average mid-ordinate (mm)	Permissible difference (mm)
1	+/-2	49 to 51	+/-17
2 to 4	+/-3	52 to 54	+/-18
5 to 8	+/-4	55 to 58	+/-19
9 to 11	+/-5	59 to 61	+/-20
12 to 14	+/-6	62 to 64	+/-21
15 to 18	+/-7	65 to 68	+/-22
19 to 21	+/-8	69 to 71	+/-23
22 to 24	+/-9	72 to 74	+/-24
25 to 28	+/-10	75 to 78	+/-25
29 to 31	+/-11	79 to 81	+/-26
32 to 34	+/-12	82 to 84	+/-27
35 to 38	+/-13	85 to 88	+/-28
39 to 41	+/-14	89 to 91	+/-29
42 to 44	+/-15	92 and more	+/-30
45 to 48	+/-16		

CHAPTER 21

RESPONSIBILITIES AND WORK METHODS APPLICABLE TO SPECIFIC DEPOTS

CHAPTER 22

RECOMMENDED READING FOR TRACK PERSONNEL

19.0 BOOKS

19.0.1 Selig, E.T. and Waters, J.M. (1994). Track Geotechnology and Substructure Management. Thomas Telford Services, London.

19.0.2 Esveld, Coenraad (1989). Modern Railway Track. MRT Productions, Germany.

19.1 CONFERENCES

19.1.1 Conference papers (1987). Related Problems on Wheel/Rail Interface and Railway Systems Capacity. International Heavy Haul Conference, Perth, Australia.

19.1.2 Conference papers (1989). Railways in Action. International Heavy Haul Conference, Brisbane, Australia.

19.1.3 Conference papers (1992). Meeting the Challenge of Increased Tonnage. International Heavy Haul Conference. Colorado Springs U.S.A.

19.1.4 Conference papers (1993). Efficiency and Safety of Heavy Haul Railways. International Heavy Haul Conference, Beijing, China.

19.2 SIMPOSIUMS, LECTURES AND COURSES

19.2.1 Post graduate course (1990). Track Maintenance. University of Pretoria.

19.2.2 Symposium (1991). Mechanised Track Maintenance. University of Pretoria.

19.2.3 Special post graduate course (1992) Fundamentals of Track Structure Design and Maintenance. University of Pretoria.

19.2.4 Special course (1993). Rail/Wheel Interaction. University of Pretoria.

19.2.5 Lectures (1999). Introduction to Multi Disciplinary Concepts in Railway Engineering. University of Pretoria.

19.2.6 Lectures (2010). Management of Continuously Welded Rails (CWR). University of Pretoria.

19.2.7 Lectures (2010). Introduction to Railway Projects and Processes. University of Pretoria.

19.2.8 Lectures (2012). Rail Safety Investigation Course. University of Pretoria.

19.2.9 Lectures (1999). Track Geotechnology. University of Pretoria

19.2.10 Lectures (2010). Railway Infrastructure Maintenance Management. University of Pretoria.

19.2.11 Lectures (2010). Railway Asset Management Course. University of Pretoria.

INDEX

	Clause	Page	Annexure/Sheet
Absence from section	2.17.14	24	
Accidents	2.17.8	21	
Application of manual	1.1	12	
Assistance	2.17.8.2	22	
Associated publications	1.2	12	
Articles found near the line	2.17.10	24	
Axle loads	8.5.3	68	
Ballast	7.1	63	4
	15.0	92	
	16.0	94	
Battered rails	6.12	56	
Beacons	9.10	73	
Blasting	9.14	74	
Block joints	6.8.2	54	26
	15.1	95	
Bonds	13.5	88	
Books	22.0	112	
Borrow pits	3.1.7	26	
Braces	2.17.3.3	20	
Breaking of the line	2.17.6	21	
Breaking of track circuits	2.17.7	21	
Bridges	3.0	26	6
	3.5	27	8
	15.2	92	
Bridle-locked points	5.5	44	
Broken rails	6.14	57	17
	15.6.1	92	
Call-outs	2.17.5	21	
Cant	4.1.4	36	9/4
Catchwater mounds	3.3	26	
Cattle guards	9.9	73	
Check rails	6.5	48	9/3
Civil Engineering	15.4	92	
Classification of			
lines	1.1.2	12	3/1
rails	10.3.1.1	78	15/1-3
	15.6.2	92	
sleepers	7.0.3.11	61	
	7.0.4.6	62	
Clearance marks	8.4	67	
Clearances	8	65	1
	15.9	93	
Closure rails	6.4	47	
Communication	9.13	74	
Communication routes	9.12	74	
Conferences	19.1	99	
Concrete sleepers	7.0.5	62	11/1-2
	16.1	94	13
Contact wire height	8.2	66	

Continuous rails	6.7	49	
	7.0.6.6	63	
	7.1.2.5	64	
Courses	19.2	99	
Creep	6.9	55	
Culverts	3.0	26	
	3.5	27	
	4.0.5.1	32	
	15.2	92	
Curves	4.1	32	9
Curving and straightening of rails	6.1	46	9/1
Cutting of rails	10.3.1	78	15/3
			18/1
Dangerous substances	2.17.15	21	
Decision models	16	94	
Defects	2.17.9	23	17
	4.0.1.3	30	
	4.0.1.4	30	
Defective rails	6.14	57	17
Derailing devices	6.18	59	
Derailments	2.17.8	17	
Destressing	6.10	55	16/3 - 5
	15.6.3	92	
	16.3.6	94	
Detonators	2.17.2	19	
Diamond crossings	4.0.9	32	25/1
	5	40	
	15.8	93	
Dimensions	8.5	67	
Distance boards	9.4	71	10/1
Double slips	4.0.9	32	25/2
	5	40	
Drainage	3.0	26	
	3.3	26	
	15.3	92	
Earthworks	3.0	26	
	3.1	26	
	15.3	92	
Electrical	13	87	
Equipment	10	77	
Eradication of noxious weeds	9.18	78	
Excavations	3.1	26	
Exothermic welding	6.11	56	
Expansion gaps	6.6.2.1	48	16/1
	6.9.3	55	
Fastenings	7.0.3	60	11
	7.0.4	61	
	7.0.5	62	
Fences	4.0.10	32	
	9.8	72	
Fires	9.15	74	
Fire breaks	9.16	75	
Joint plated joints	6.8.1	53	

Flying gang trolleys	11.0	79	
Flexible point blades	5.2.3	42	
Footplate inspections	4.0.3	31	
Formation	3.0	26	
	3.2	26	4
	15.3	92	
Frogs	5.3	43	
Fouling points	8.1	66	
Gauge	4.1.3	35	1/1-2,5 9/2 - 3
Geometry	4.1	33	
	15.5.1	92	
Goal	2.0	13	
Goods found near the track	2.17.10	24	
Grade posts	9.1	69	10/1
Hand signals	2.17.1.8	19	
Handling of rails	6.0	46	
Height gauge	8.2.4	66	
Height of contact wire	8.2	66	
Hinged point blades	5.2.2	42	
Inquiries	2.17.8.9	23	
Inspection of-			
clearances	4.0.11	33	
diamond crossings	4.0.9	32	
drainage	4.0.6	32	
earthworks	4.0.6	32	
fences	4.0.10	32	
formation	4.0.6	32	
level crossings	4.0.10	32	
private sidings	18.7	98	
signs	4.0.10	32	
slips	4.0.9	32	
structures	4.0.5	32	
track material	4.0.8	32	
turnouts	4.0.9	32	
Insulated joints	6.8.2	54	26
	15.1	92	
Jumper cables	13.5.4	89	20
Junction rails	6.3	47	
Kick-outs	6.7.8	52	
Kilometre posts	9.1	69	10/1
Laying of-			
rails	6.6	48	
continuous rails	6.7	49	
Lectures	19.2	99	
Level crossings	4.0.10	32	10/1
	9.5	71	

	9.6	71	
Life of rails	16.3.5	94	
Loading and unloading	6.0	46	13
Lubrication	6.16	58	19
	17.2	95	
Machines	9.6.7	71	
Maintenance of-			
stock and point rails	5.2	41	
frogs	5.3	43	
private sidings	18.4.2	97	
Manual	1	72	
Marking of ultrasonically detected defects	4.0.7	32	17/5
Material	4.0.8	32	
	10	77	
	13.3	88	
	15.5.2	92	
	15.5.3	92	
Measuring devices	13.3.2	88	
Mismatched rails	6.12	56	
Motor trolley inspections	4.0.2	30	
Motor trolleys	11.1	81	
	11.2	82	
Noxious weeds	9.18	76	
Objectives	2.1	13	
Obstructions	2.17.8	21	
On-track machines	11.4	84	
	15.5.4	92	
	15.5.5	92	
Operating	14	91	
Patrolling	4.0.1	30	
Permissible speed on curves			9/4
Pest control	9.19	76	
Pits	4.0.5.2	32	
Plants	9.17	75	
Platforms	8.0.10	65	1/3
Points boxes	5.6	44	
Points locks and keys	5.4	44	
Poles	8.3.1.2	57	
	13.3.2	88	
Private sidings	18	97	
Productivity	2.1.5	13	
Property	2.17.3.1	20	
	10.0.5	77	
Protection of trains and	2.17.1	19	
safeguarding of employees	2.17.3	20	
	2.17.8	21	
Publications	1.2	12	
Purpose	1.0	12	

Radii of turnouts			24
Rail			
breaks	6.14	57	17
	15.6.1	92	
classification	10.3.1.1	78	15/2
	15.6.2	92	
creep	6.9	55	
curving	6.1	46	
cutting	10.3.1.2	78	18
defects	6.14	57	17
	15.6.1	92	
destressing	6.10	55	
	15.6.3	92	
	16.3.6	94	
girders	3.6.4	28	7/1
joints	6.8	54	
life	16.3.5	94	
lubricators	6.16	58	19
profiles	17.5	96	
replacing	16.3.7	94	
re-profiling	16.3.3	94	
	16.3.4	94	
straightening	6.1	46	
transposing	16.3.8	94	
transporters	11.3	83	
usage	6.2	46	15/2
	16.3.1	94	
	16.3.2	94	
wear	6.15	58	15/2
Rail/wheel interaction	17	96	
Recommended reading	19	99	
Reconditioned rails	6.0.2	46	
Releasements	10.3	78	
Reliable watch	2.17.12	21	
Repair of battered and mismatched rails	6.12	56	
Replacing of rails	16.3.7	94	
Responsibilities of the			
Assistant General Manager (Infrastructure-Maintenance)	2.2	13	
Depot Engineering Manager	2.4	14	
Engineering Technician	2.8	16	
Infrastructure Manager	2.3	14	
Maintenance Manager (Track)	2.5	14	
Production Manager (Track)	2.7	15	
Track Inspector (Maintenance Management)	2.5	14	
Technical Manager (Welding)	2.12	17	
Technical Supervisor (Welding)	2.11	17	
Track Inspector (Production)	2.11	17	
Track Manager	2.12	17	
Track Master	2.9	16	
Track personnel (On-track machines)	2.6	15	
Track Welder	2.10	16	
Road-rail vehicles	11.2	82	
Rodents	9.19	76	
Rolling stock dimensions	8.5	67	

Safeguarding of employees	2.17.1	18	
Safety precautions	2.17.3	20	
Safety precautions in station yards	2.17.4	21	
Safety rails	3.5.3	28	6
Security	10.0	77	
Scotch blocks	6.18	59	
Screening machines	7.1.4	63	
	15.5.5	92	
Security of tools, equipment and material	10.0	77	
Service roads	9.7	72	
Signals	12	86	
Signs	4.0.10	32	10
	15.7	92	
Symposiums	19.2	99	
Single slips	5	40	25/3
Slacks, kinks and kick-outs	6.7.8	52	
Sleepers	7.0	60	5
	10.3.2	79	11
	10.3.3	79	12
	16.1	91	8
Slips	4.0.9	32	25/2
	5.0	40	25/3
	15.8	83	
Speed restrictions	9.2	69	9/4
	9.3	71	10
Spiked points	5.7	93	
Splice joints	6.8.3	54	
Steel sleepers	7.0.4	61	11/3
Stock and point rails	5.2	34	
Stocks of material	10.2	68	
Stop blocks	6.17	59	28
Stormy weather	4.0.1.5	30	
Straightening and curving of rails	6.1	46	9/1
Structure gauge	8	65	
Structures	4.0.5	32	
Switch boxes	5.6	44	
Table drains	3.3	26	
Taking over a length	2.17.11	24	
Tamping	7.1.5	63	
	11.4	84	
	15.5.4	92	
	15.8.3	93	
	16.2	94	
Tapes	2.17.7.2	21	
	10.4.1	79	
Temperature	6.6	48	16
	6.7	49	
	6.10	55	
Temporary track signs	9.3	70	10/2
Temporary track support	3.6	28	7
Tolerances for platforms	8.0.9	65	1/3
	8.0.10	65	
Tools and equipment	10.4	79	
Track			
alignment	6.7.8	52	
centres	8.3	66	
circuit bonds	13.5	88	

circuits	2.17.7	21	
condition evaluation	15.5.3	92	
	15.8.5	93	
data	1.2	12	
defects	2.17.9	23	
defect books	2.17.9	23	
gauge and rail wear	4.1.3	35	
			9/2 - 3
gauges	10.4	79	15/1
measuring car	4.0.4	31	
signs	4.0.10	32	10/1
	9.0	69	
	15.7	92	
standards	4.1.1	33	
support	3.6	28	7
Traction return circuit	13.5	78	
Transition curves	4.1.2	35	9/2 - 3
	4.1.4	36	
Transport of rails	6.0	46	
	10.3.1.2	78	
	11.3	83	
Transporters	11.3	83	
Transposing of rails	16.3.8	94	
Self-propelled trolleys	11	80	
Tumblers	5.5	44	27
	5.6	44	
Tunnels	3.0	26	
	3.4	27	
	4.0.5	32	
	6.6.1.3	49	
	6.7.4.6	51	
Turnouts	4.0.9	32	21 - 23
	5	40	
	15.8	93	
Ultrasonic			
defects			17/5
inspections	4.0.7	32	
	15.6.5	92	
Undercut stock rails	5.2.3	35	
Undercutting and shoring	3.1	26	
Underground services	9.11	73	
Useful dimensions	8.5	67	
Vehicle gauges			2/1-2
Visibility	9.6	71	
Warning boards	9.4	71	10/1
Warning signs at level crossings	9.5	71	10/1
Wear of rails	6.15	49	15/1
Weeds	9.18	76	
Wheel-spin damage	6.13	57	
Whistle boards	15.7	92	10/1

Wood sleepers	7.0.3	60	11/4
Work codes	15	92	
X-ray inspections	4.0.7	32	
	15.6.5	92	

(Start Contents)

HORIZONTAL CLEARANCES : 1 065mm TRACK GAUGE

RADIUS	WITH CANT		NO CANT	WITH CANT	
(m)	H (mm)	L (mm)	H & L	B (mm)	C (mm)
90	2 730	3 090	2 780	1 130	2 100
100	2 700	3 030	2 750	1 140	2 050
120	2 650	2 970	2 700	1 160	2 010
140	2 620	2 920	2 660	1 175	1 990
170	2 590	2 870	2 630	1 190	1 970
200	2 570	2 820	2 600	1 205	1 950
250	2 550	2 790	2 580	1 230	1 920
300	2 540	2 760	2 560	1 250	1 900
350	2 530	2 730	2 540	1 270	1 890
400	2 520	2 710	2 530	1 290	1 875
500	2 510	2 680	2 520	1 320	1 850
600	2 500	2 660	2 510	1 340	1 830
800	2 490	2 620	2 500	1 365	1 790
1 000	2 480	2 600	2 490	1 380	1 760
1 200	2 480	2 580	2 490	1 200	1 730
1 500	2 480	2 550	2 480	1 415	1 700
2 000	2 480	2 500	2 480	1 440	1 660
3 000	2 470	2 470	2 470	1 500	1 600
>5 000	2 460	2 460	2 460	1 600	1 600

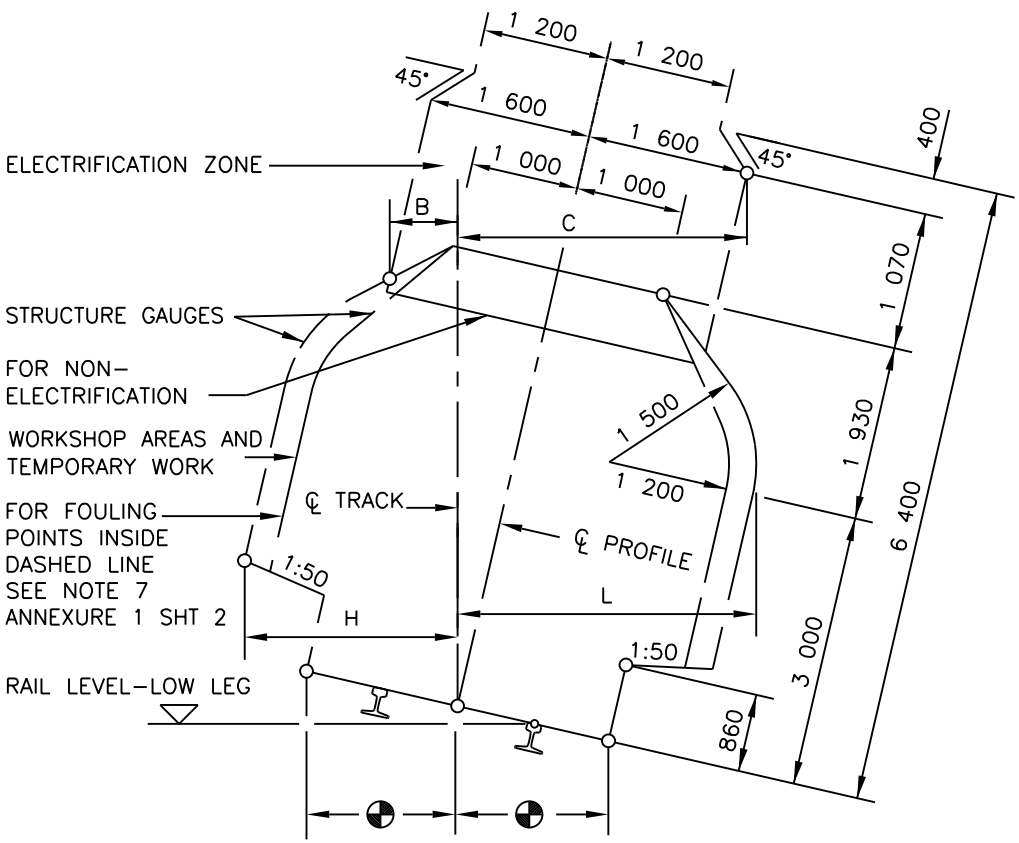

REMARKS:

1. H AND B IS THE REQUIRED HORIZONTAL CLEARANCE ON THE HIGH LEG OF THE CURVE BASED ON MINIMUM CANT.
2. L AND C IS THE REQUIRED HORIZONTAL CLEARANCE ON THE LOW LEG OF THE CURVE BASED ON MAXIMUM CANT.
3. INTERMEDIATE VALUES MAY BE INTERPOLATED BY THE ENGINEER IN CHARGE.
4. FOR WORKSHOP AREAS AND TEMPORARY WORK, CLEARANCES H AND L MAY BE REDUCED BY 300mm.
5. ⊕ SEE ANNEXURE 1 SHEET 3 FOR PLATFORM CLEARANCES.
6. ALSO REFER TO REMARKS 4 TO 8 OF ANNEXURE 1 SHEET 2.
7. USE SMALLER RADIUS IF RADIUS INBETWEEN

ANNEXURE 1
SHEET 1 of 5

BE 97–01 Sht 1 Version 1

VERTICAL CLEARANCES : 1 065mm TRACK GAUGE

LOCATION		NOT ELECTRIFIED	ELECTRIFIED (PRESENT OR FUTURE)	
			3kV & 25kV	50kV
	RADIUS (mm)	S (mm)	V (mm)	V (mm)
ALL AREAS OTHER THAN THOSE INDICATED BY * BELOW	100	4 470	5 050	5 400
	300	4 410	5 020	5 370
	600	4 370	5 000	5 350
	1 000	4 350	4 990	5 340
	1 500	4 310	4 960	5 310
	2 000	4 290	4 940	5 290
	>3 000	4 270	4 930	5 280
* OVER OR NEAR POINTS AND CROSSING IF REQUIRED BY ELECTRICAL IRRESPECTIVE OF RADIUS		5 650		6 000

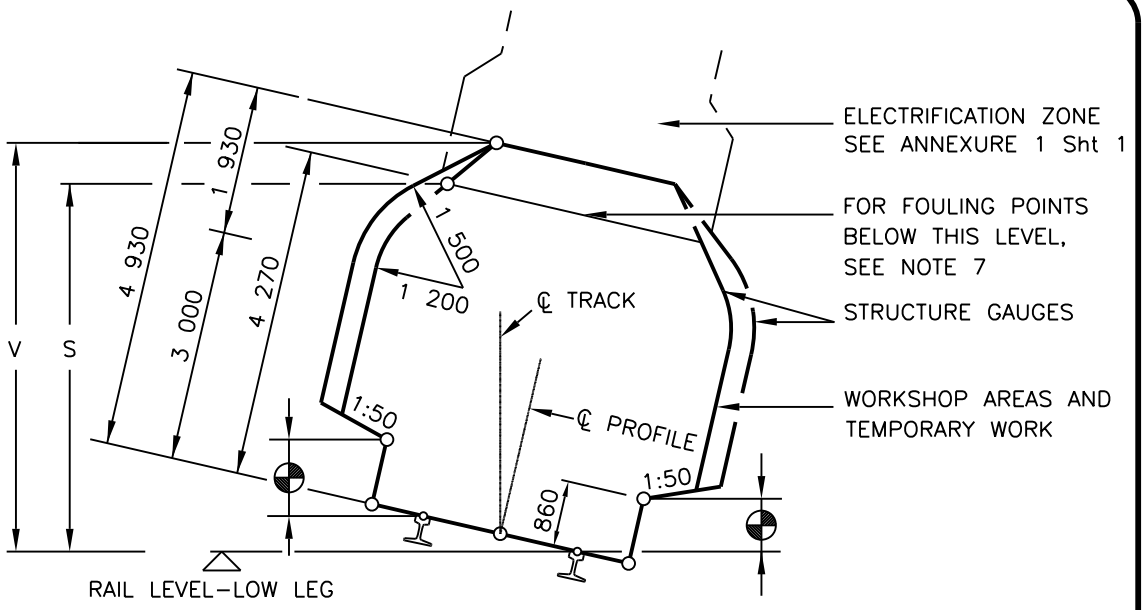

REMARKS:

1. V IS THE REQUIRED VERTICAL CLEARANCE EXCEPT WHERE REDUCED CLEARANCE S APPLIES.
2. S IS THE MINIMUM VERTICAL CLEARANCE FOR STRUCTURES AND TEMPORARY WORK OVER NON–ELECTRIFIED LINES.
3. INTERMEDIATE VALUES MAY BE INTERPOLATED BY THE ENGINEER IN CHARGE.
4. FOR APPLICATION AT CURVES
   - 4.1 APPLY INCREASED CLEARANCES FOR CURVES TO POINTS 3m BEYOND THE ENDS OF THE CIRCULAR CURVE.
   - 4.2 REDUCE CLEARANCES AT A UNIFORM RATE OVER THE REMAINDER OF THE TRANSITION CURVE.
   - 4.3 FOR NON–TRANSITIONED CURVES REDUCE AT A UNIFORM RATE OVER A LENGTH OF 15m ALONG STRAIGHTS.
5. NEW STRUCTURES: SEE BRIDGE CODE.
6. TUNNELS: SEE DRAWING BE 82–35.
7. FOULING POINTS: SEE CLAUSE 8.1.
8. CLEARANCES ARE BASED ON 15m BOGIE CENTRES AND 21,2m VECHILE BODY LENGTH.
9. ◓ SEE ANNEXURE 1 SHEET 3 FOR PLATFORM CLEARANCES.

CLEARANCES : PLATFORMS

PLATFORMS : TRACK GAUGE 1 065mm

PASSENGERS

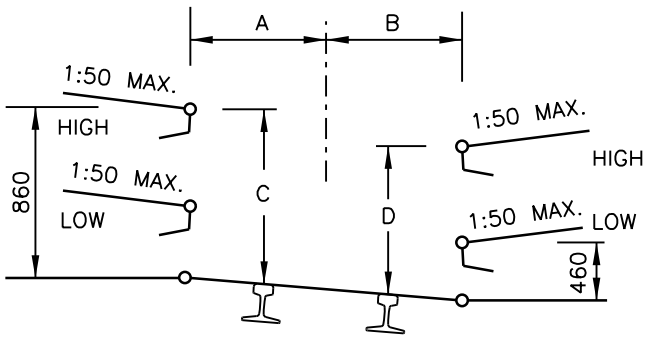

GOODS

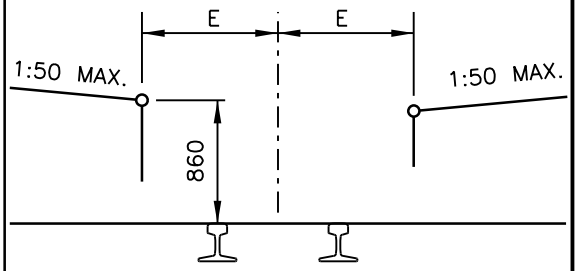

(NO CANT)

RADIUS (m)	A (mm)	B (mm)	C (mm)	D (mm)	E (mm)
90	1 690	1 820	890	810	1 840
100	1 650	1 790	890	810	1 810
120	1 610	1 740	890	810	1 760
140	1 580	1 700	890	810	1 720
170	1 550	1 660	890	810	1 690
200	1 530	1 630	890	820	1 670
250	1 520	1 600	890	820	1 640
300	1 520	1 580	890	830	1 620
350	1 520	1 560	880	830	1 600
400	1 520	1 550	880	840	1 590
500	1 520	1 540	880	850	1 580
600	1 520	1 530	870	850	1 570
800	1 520	1 520	860	860	1 560
1 200	1 520	1 520	860	860	1 550
2 000	1 520	1 520	860	860	1 540
3 000	1 520	1 520	860	860	1 530
STRAIGHT	1 520	1 520	860	860	1 520

REMARKS:

1. NO CANT TO BE APPLIED EXCEPT WHEN THE GOODS PLATFORM IS ON A RUNNING LINE.
2. INTERMEDIATE VALUES MAY BE INTERPOLATED BY THE ENGINEER IN CHARGE.
3. ⊕ 8m TO MAIN STATION-BUILDINGS AND 3m TO ALL OTHER STRUCTURES.
4. TOLERANCES : SEE CLAUSE 8.0.10.
5. ALWAYS USE THE SMALLEST RADIUS

STRUCTURES ON PLATFORMS : 1 065mm AND 610mm TRACK GAUGE

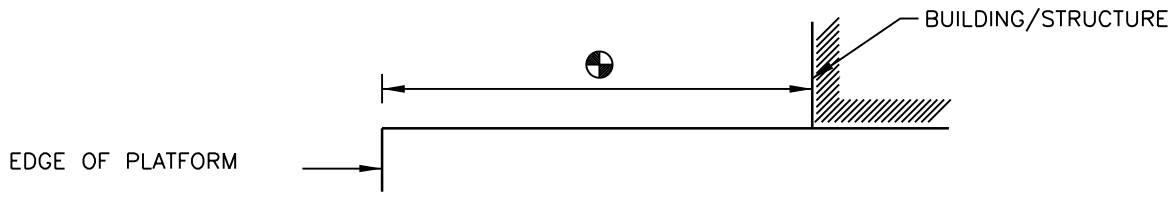

SPECIAL STRUCTURE GAUGE FOR TRUCK TIPPLER

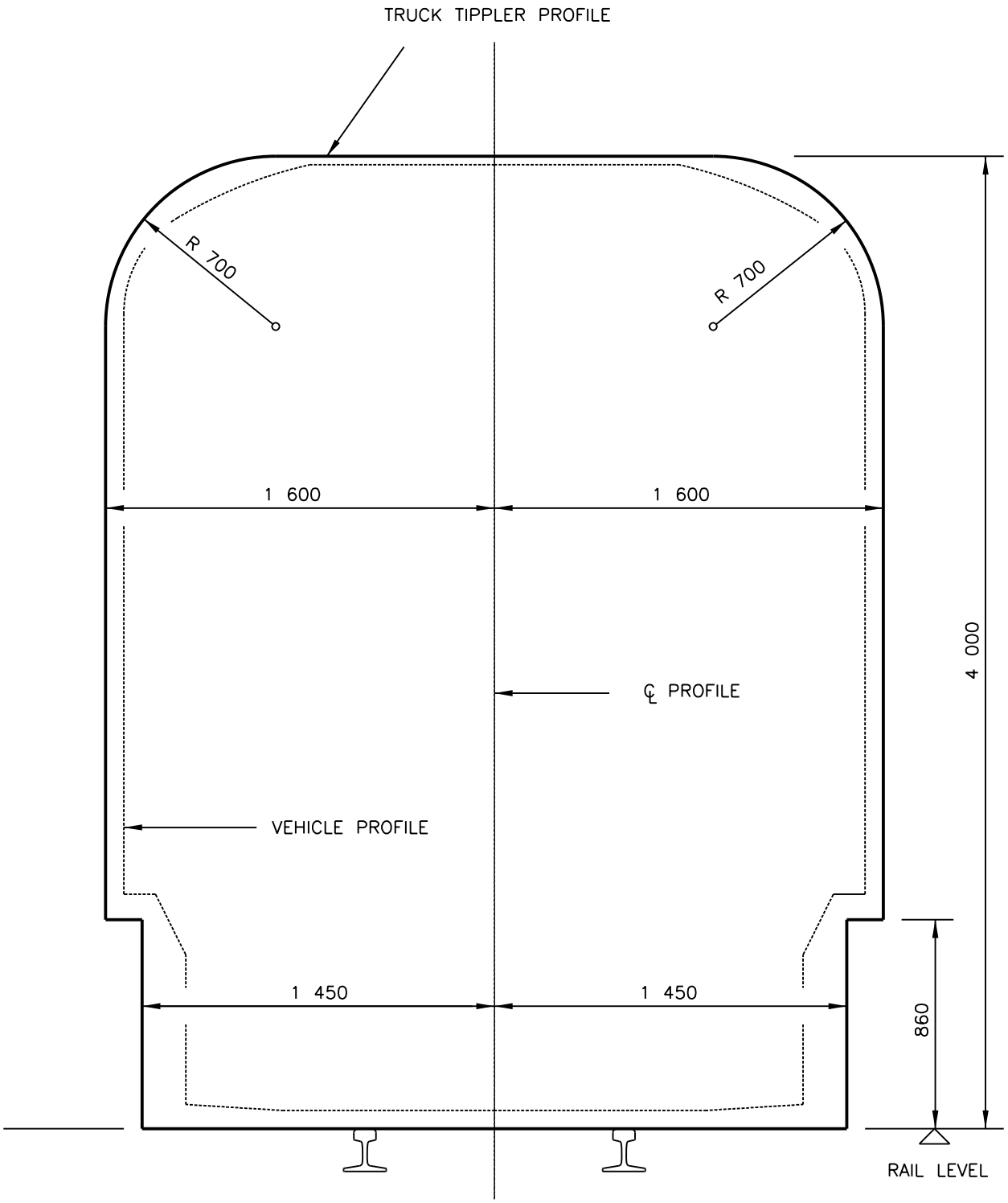

TRACK GAUGE 1 065mm

CLEARANCES : 610mm TRACK GAUGE

RADIUS (m)	WITH CANT		NO CANT	V (mm)
	H (mm)	L (mm)	H & L (mm)	
50	2 370	2 490	2 400	4 320
70	2 310	2 420	2 330	4 310
100	2 260	2 370	2 280	4 310
140	2 220	2 340	2 250	4 310
200	2 200	2 300	2 220	4 300
300	2 190	2 270	2 200	4 300
500	2 180	2 230	2 190	4 290
700	2 170	2 200	2 180	4 270
1 000	2 170	2 170	2 170	4 270
>2 000	2 160	2 160	2 160	4 270

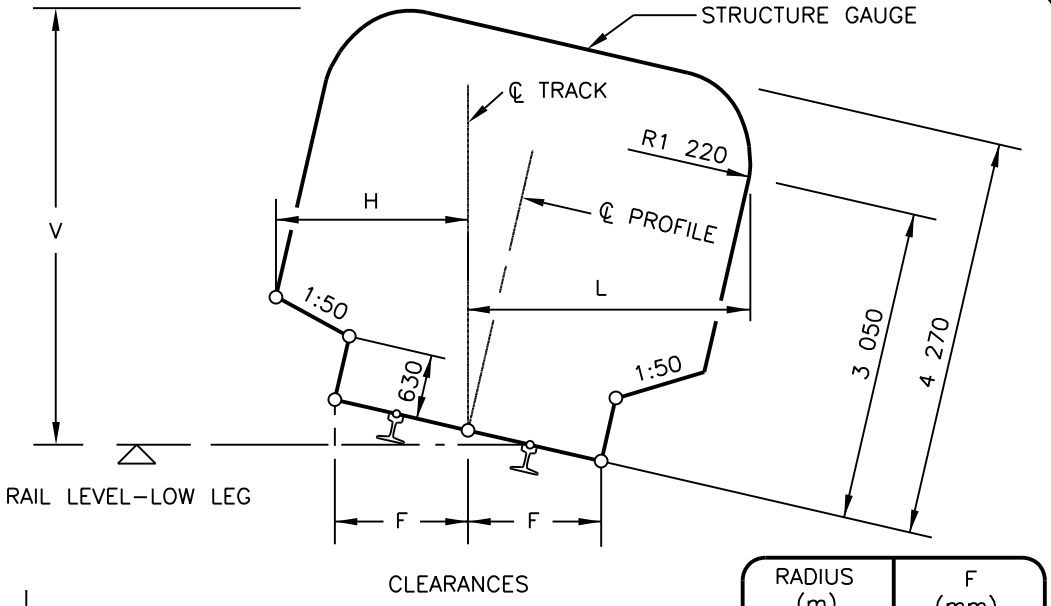

CLEARANCES

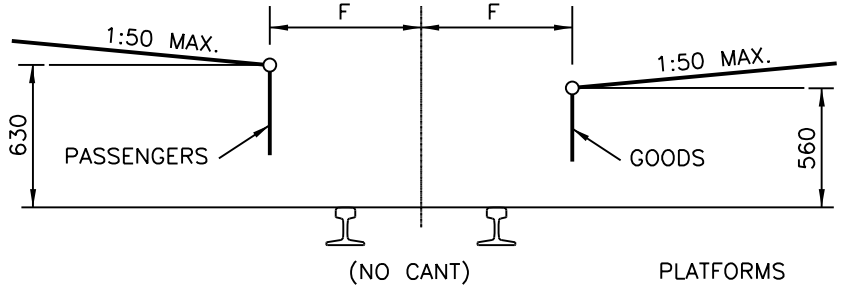

(NO CANT) PLATFORMS

RADIUS (m)	F (mm)
50	1 550
60	1 510
80	1 460
100	1 430
120	1 410
140	1 390
170	1 380
200	1 370
250	1 360
300	1 350
600	1 330
1 000	1 320
>2 000	1 320
STRAIGHT	1 310

REMARKS:

1. H IS THE MINIMUM HORIZONTAL CLEARANCE ON THE OUTSIDE OF THE CURVE BASED ON MINIMUM CANT.
2. L IS THE MINIMUM HORIZONTAL CLEARANCE ON THE INSIDE OF THE CURVE BASED ON MAXIMUM CANT.
3. V IS THE MINIMUM VERTICAL CLEARANCE.
4. FOR APPLICATION AT CURVES:
   - 4.1 APPLY INCREASED CLEARANCES FOR CURVES TO POINTS 2m BEYOND THE ENDS OF THE CIRCULAR CURVE.
   - 4.2 REDUCE CLEARANCES AT A UNIFORM RATE OVER THE REMAINDER OF THE TRANSITION CURVE.
   - 4.3 FOR NON–TRANSITIONED CURVES REDUCE AT A UNIFORM RATE OVER A LENGTH OF 18m ALONG STRAIGHTS.
5. INTERMEDIATE VALUES MAY BE INTERPOLATED BY THE ENGINEER IN CHARGE.
6. ALSO REFER TO REMARKS 5, 6 AND 7 OF ANNEXURE 1 SHEET 2.
7. CLEARANCES ARE BASED ON 9 700mm BOGIE CENTRES AND 13 700mm VEHICLE BODY LENGTH.
8. SEE ANNEXURE 1 SHEET 3 FOR STRUCTURES ON PLATFORMS.

VEHICLE GAUGE :
1 065mm TRACK GAUGE

ANNEXURE 2
SHEET 1 of 2

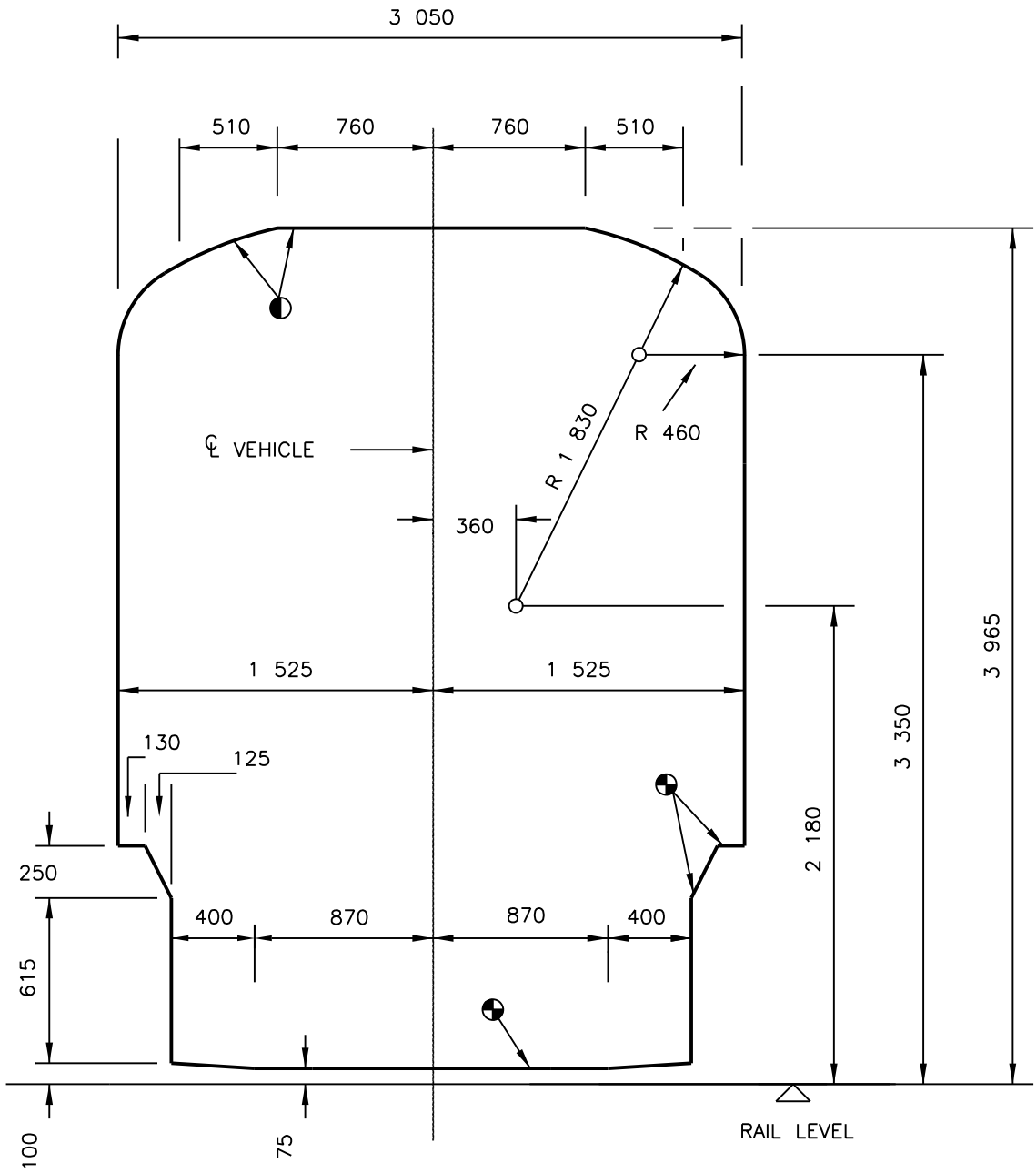

REMARKS:

1. ◐ WITHOUT LOAD AND WITH NEW TYRES, VEHICLE MUST NOT BE HIGHER THAN THIS OUTLINE.
2. ◒ WITH FULL LOAD AND WORN TYRES, VEHICLE MUST NOT BE LOWER THAN THIS OUTLINE.

VEHICLE GAUGE :
610mm TRACK GAUGE

ANNEXURE 2
SHEET 2 of 2

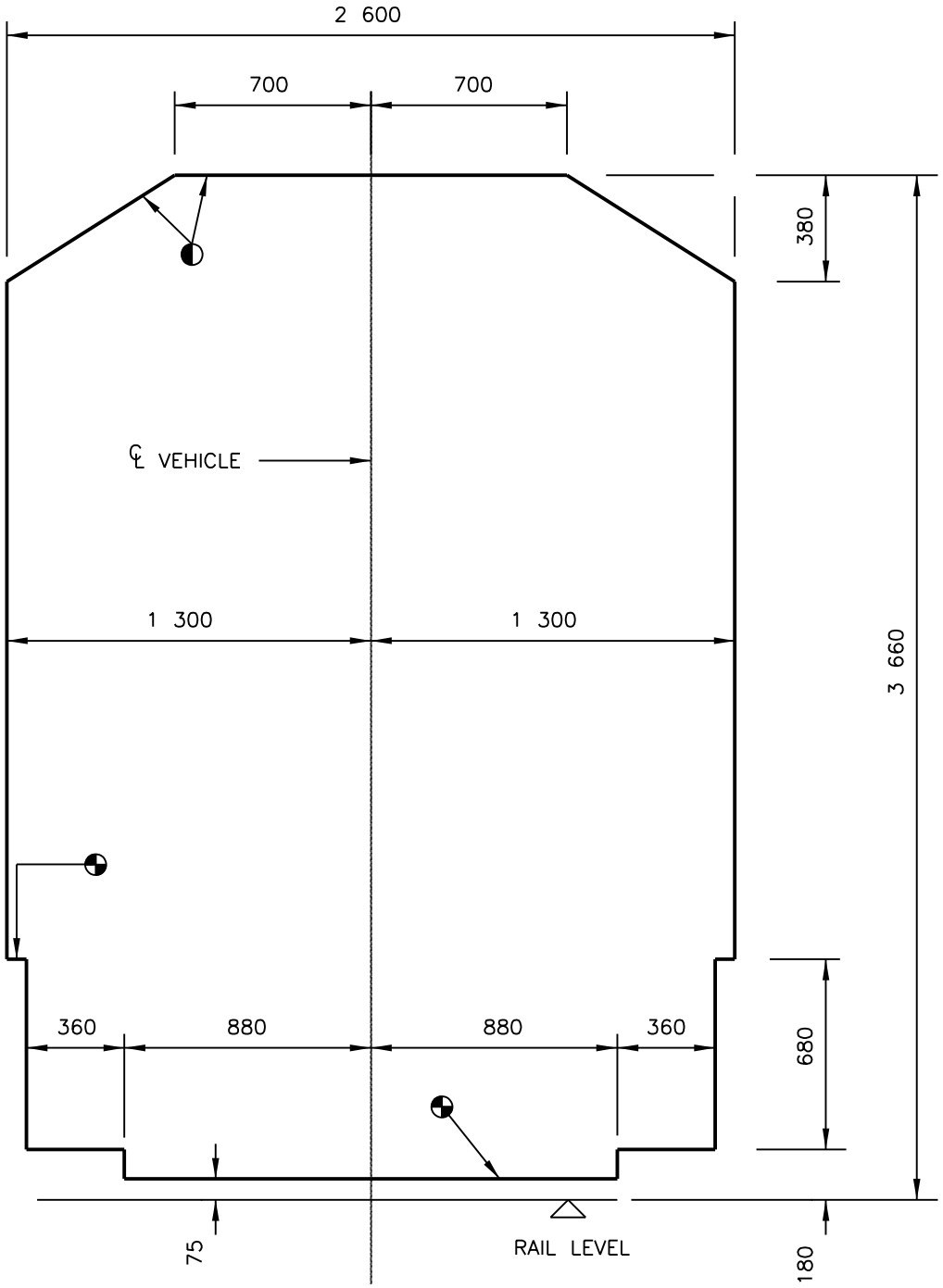

REMARKS:

1. ◐ WITHOUT LOAD AND WITH NEW TYRES, VEHICLE MUST NOT BE HIGHER THAN THIS OUTLINE.
2. ◒ WITH FULL LOAD AND WORN TYRES, VEHICLE MUST NOT BE LOWER THAN THIS OUTLINE.

CLASSIFICATION AND STANDARDS FOR RUNNING LINES : 1 065mm TRACK GAUGE

ANNEXURE 3
SHEET 1 of 1

CLASSIFICATION OF RUNNING LINES			TRACK STANDARDS FOR RUNNING LINES				
CLASS OF LINE	MAXIMUM AXLE LOAD (Ton)	GROSS TON PER YEAR (Million)	RAIL TYPE AND MASS	SLEEPER AND SPACING	BALLAST		
					DEPTH (mm)	QUANTITY (m^3 / km)	
						CONCRETE	WOOD / STEEL
S	26	–	60kg/m	FY/PY 650mm	300	1 600	–
N1	20	>15	57kg/m	FY/PY/ #700mm	280	1 500	–
N2	20	5–15	48kg/m	P2/F4 STEEL/WOOD 700mm	200	1 200	1 100
N3	–	<5	REQUIRES THE PRIOR APPROVAL OF THE CJIEF ENGINEER (INFRASTRUCTURE MAINTENANCE).				

REMARKS:

1. ANY DEPARTURE FROM THESE STANDARDS REQUIRE THE APPROVAL OF THE CHIEF ENGINEER (INFRASTRUCTURE MAINTENANCE).
2. CLAUSES 6.2 AND 6.7, AS WELL AS ANNEXURES 4 AND 15 SHEET 2, MUST BE READ TOGETHER WITH THIS TABLE.
3. # P2, F4 AND WOODEN SLEEPERS ARE ALSO ACCEPTABLE. SEE ANNEXURE 4 SHEET 1 FOR BALLAST QUANTITY.

FORMATION AND BALLAST : MINIMUM REQUIREMENTS

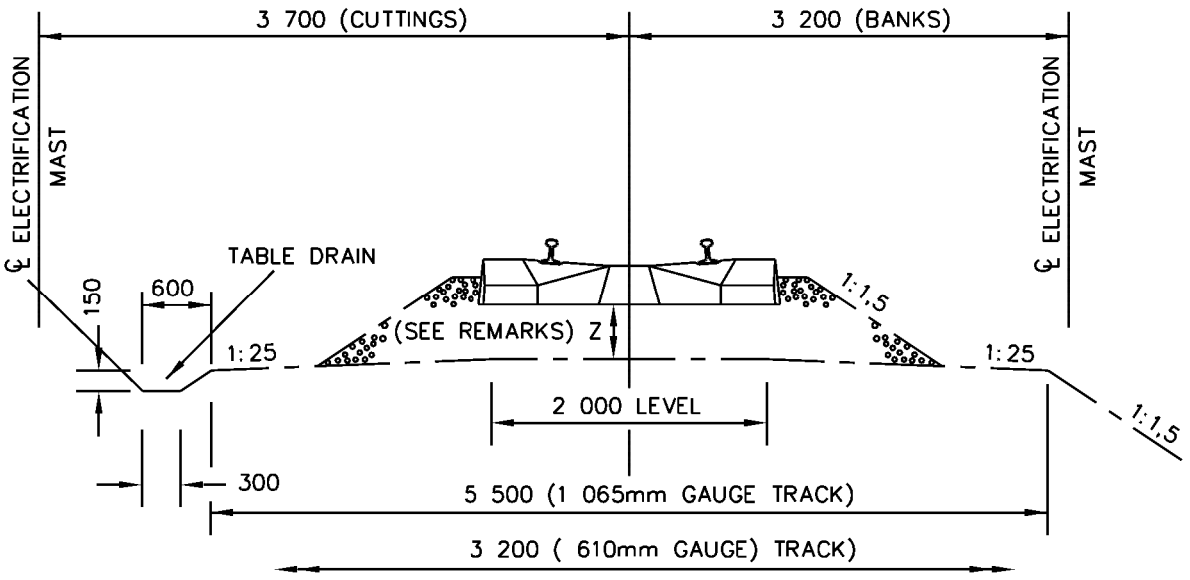

CUTTINGS AND BANKS

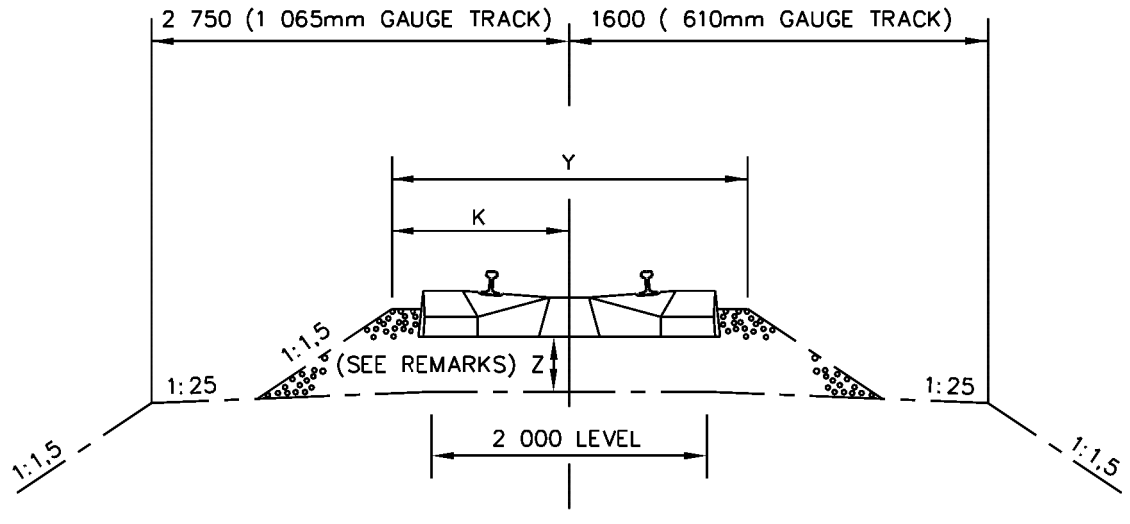

BALLAST

CLASS OF LINE	Z (mm)	Y (mm)	K (mm)	QUANTITY (m^3/km)		
				PY/FY	P2/F4	WOOD
S	300	2 800	1 400	1 600	–	–
N1	280	2 700	1 350	1 500	1 400	–
N2	200	2 700	1 350	–	1 200	1 100

REMARKS:

1. Z TO BE MEASURED UNDER THE LOW LEG RAIL ON CURVES.
2. DEPTH OF BALLAST (Z) ARE TO BE MEASURED IN THE CONSOLIDATED STATE, THAT IS AFTER 100 000 GROSS TON TRAIN TRAFFIC.
3. SEE CLAUSE 17.1.2

SLEEPER SPACING

ANNEXURE 5
SHEET 1 of 1

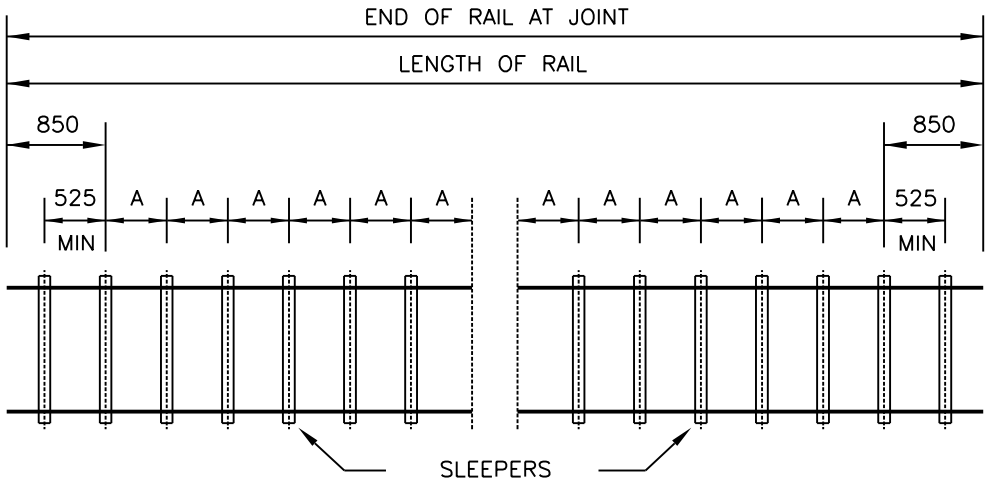

GAUGE 1 065mm

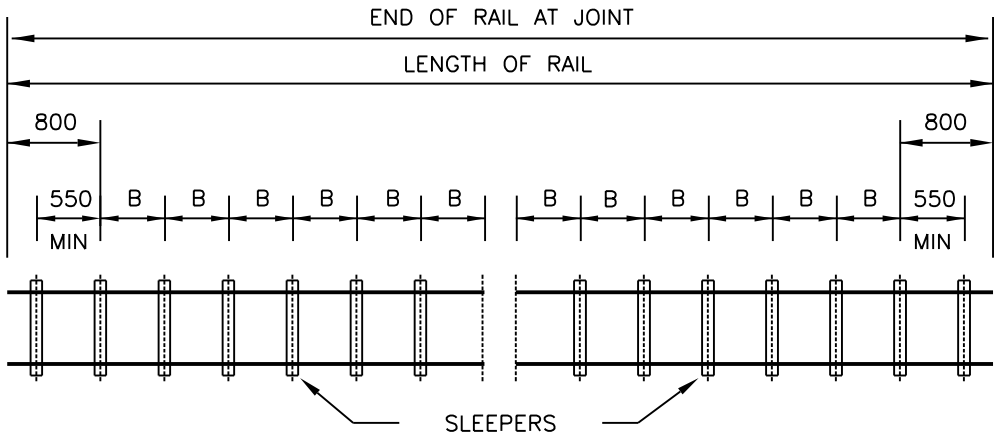

GAUGE 610mm

REMARKS:
1. DISTANCE FROM END OF RAIL TO SECOND SLEEPER SPACING IS FIXED.
2. SLEEPER SPACING FOR SAFETY BARS TO BE THE SAME AS FOR LOCK BARS.

LENGTH OF RAIL	NOMINAL SPACING					
	A = 650mm		A = 700mm		B = 800mm	
	SLEEPERS PER		SLEEPERS PER		SLEEPERS PER	
	RAIL	km	RAIL	km	RAIL	km
36m FOR 1 065mm GAUGE	56	1 555	52	1 444	–	–
CWR FOR 1 065mm GAUGE	–	1 539	–	1 429	–	–
12m FOR 610mm GAUGE	–	–	–	–	16	1 333

SAFETY RAILS FOR BRIDGES

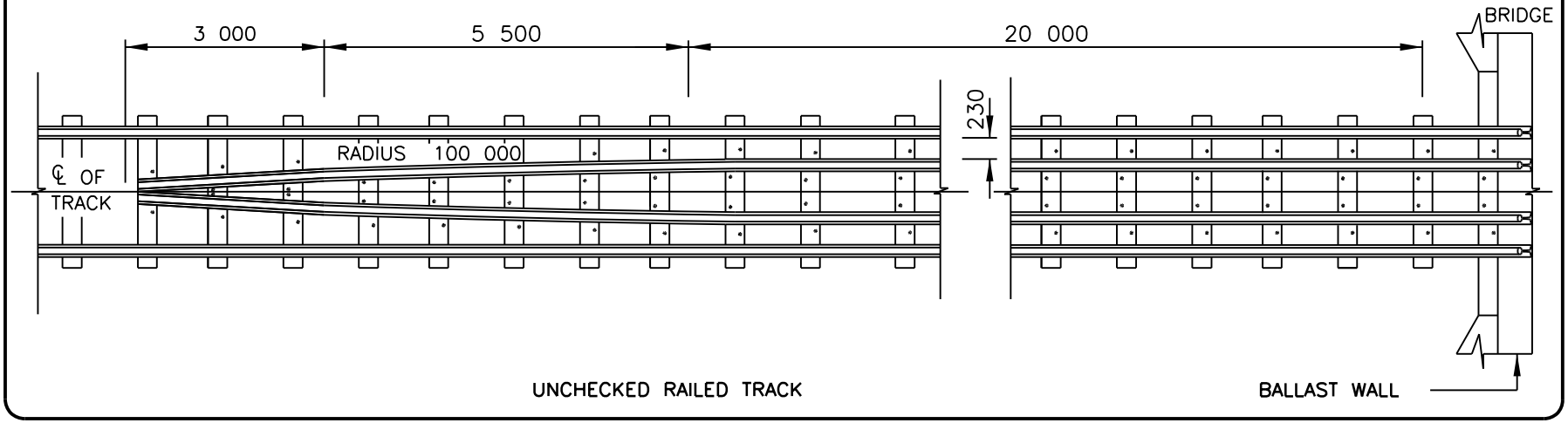

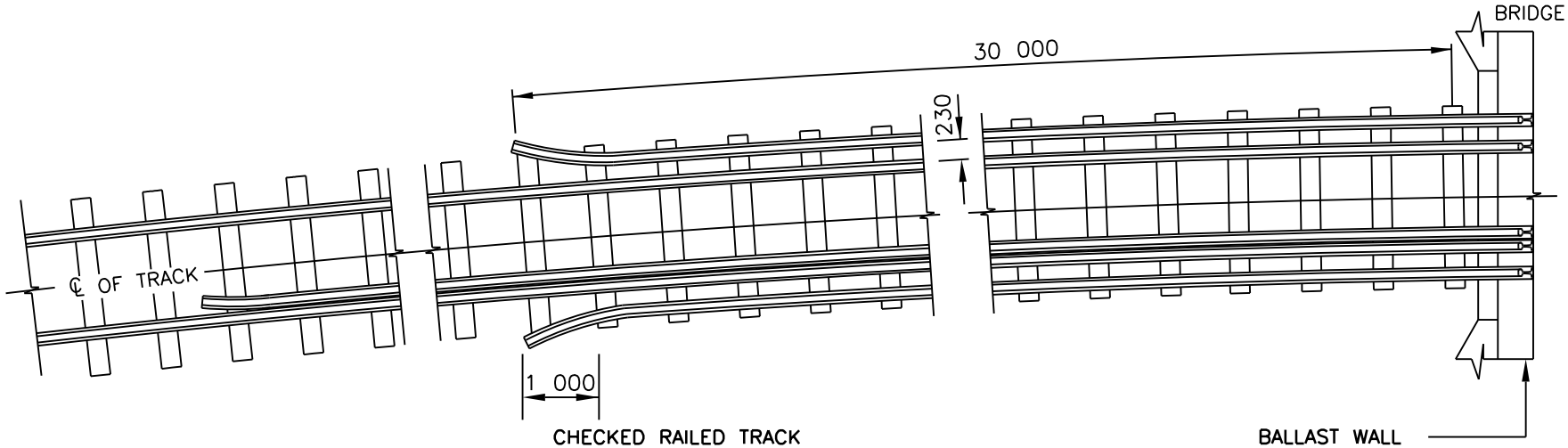

REMARKS:

1. FOR MANUFACTURING DETAILS OF V–PIECE SEE DRAWING TYPE–E–7070.
2. SEE CLAUSE 3.5.3
3. READINGS ARE IN MM

ANNEXURE 6
SHEET 1 of 1

BE 97–06 Sht 1 Version 1

TEMPORARY TRACK SUPPORT : RAIL GIRDERS

ANNEXURE 7
SHEET 1 of 3

TOP RAIL GIRDERS
(SEE NOTE 1)

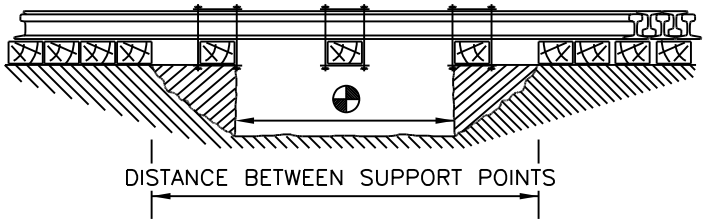

SIDE ELEVATION

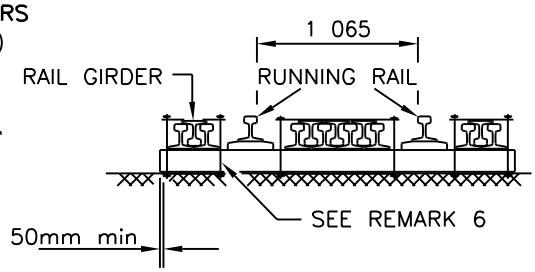

END ELEVATION

BOTTOM RAIL GIRDERS
(SEE NOTE 2)

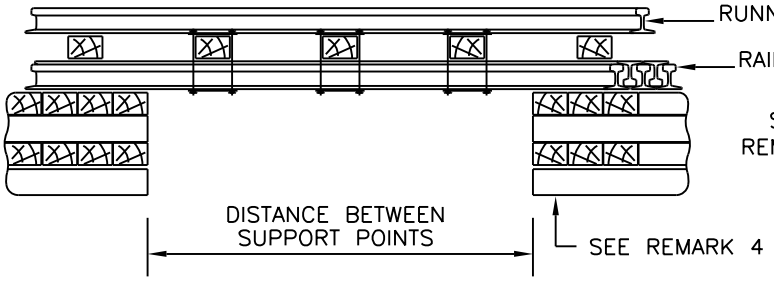

SIDE ELEVATION

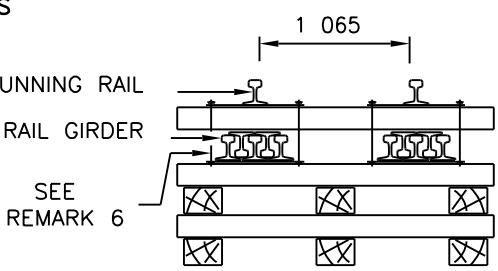

END ELEVATION

TOP RAIL GIRDERS				BOTTOM RAIL GIRDERS			
DISTANCE BETWEEN SUPPORT POINTS	RAIL GIRDER GROUPS			DISTANCE BETWEEN SUPPORT POINTS	RAIL GIRDER GROUPS		
	30–37kg	40–43kg	48kg		30–37kg	40–43kg	48kg
1,5m	3–5–3	3–5–3	3–5–3	1,5m	5–5	5–5	3–3
2,0m	3–7–3	3–5–3	3–5–3	2,0m	7–7	5–5	3–3
2,5m	5–9–5	3–7–3	3–5–3	2,5m	9–9	7–7	5–5
3,0m	–	5–9–5	3–7–3	3,0m	–	9–9	5–5
3,5m	–	7–9–7	3–7–3	3,5m	–	11–11	7–7
4,0m	–	–	5–9–5	4,0m	–	–	9–9
4,5m	–	–	7–9–7	4,5m	–	–	11–11

REMARKS:

1. READ IN CONJUNCTION WITH CLAUSE 3.6.
2. TEMPORARY TRACK SUPPORTS HAS TO BE APPROVED BY THE DEPOT ENGINEER. IN EACH CASE, THE SUPPORT POINTS HAS TO BE DESIGNED BY A PROFESSIONAL ENGINEER.
3. CHOOSE RAIL GIRDERS TO SUIT REQUIRED DISTANCE BETWEEN SUPPORT POINTS.
4. ONLY ONE TYPE OF RAIL TO BE USED IN RAIL GIRDER.
5. RAILS TO BE CLASS C, 12m OR LONGER WITHOUT WELDED JOINTS.
6. FOR CLAMPS SEE B.E. 7054/1 M.
7. ⊕ WIDTH OF EXCAVATION.
8. CLAMP EVERY SLEEPER ACROSS THE ENTIRE LENGTH OF THE RAIL GIRDER.
9. MIN. OF 4 SLEEPERS ARE REQUIRED TO BE USED AT SUPPORT POINTS.
10. NOT TO BE USED ON LINES CARRYING HEAVY LOADS.
11. PIPE JACKING MUST BE CONSIDERED AS AN ALTERNATIVE
12. TRACK MUST BE PROPER DESTRESSED BOTH LEGS

TEMPORARY TRACK SUPPORT : SLEEPER CRIBS

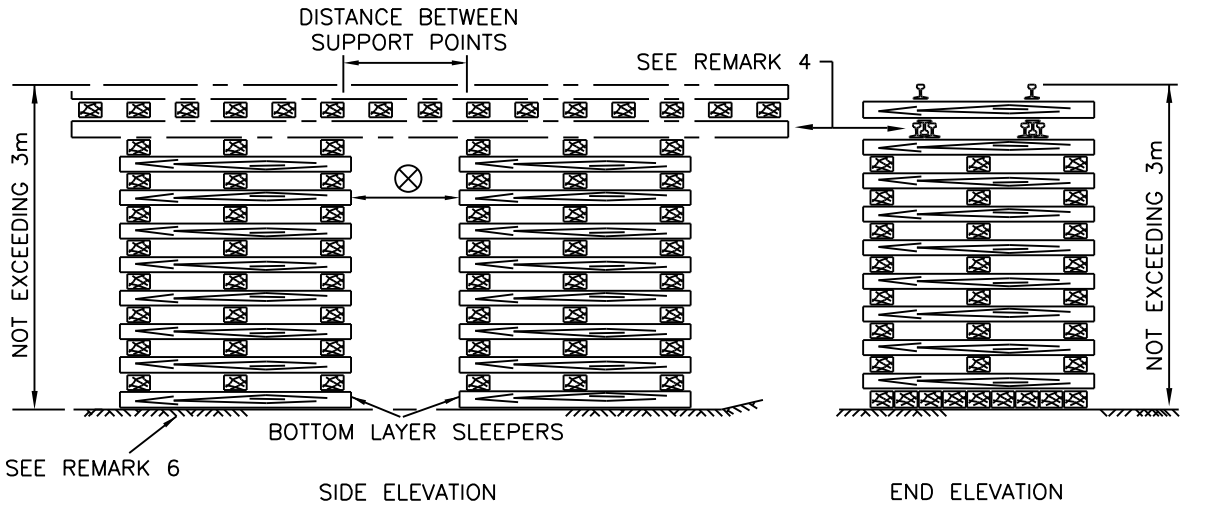

SINGLE SLEEPER BRIDGING CRIB

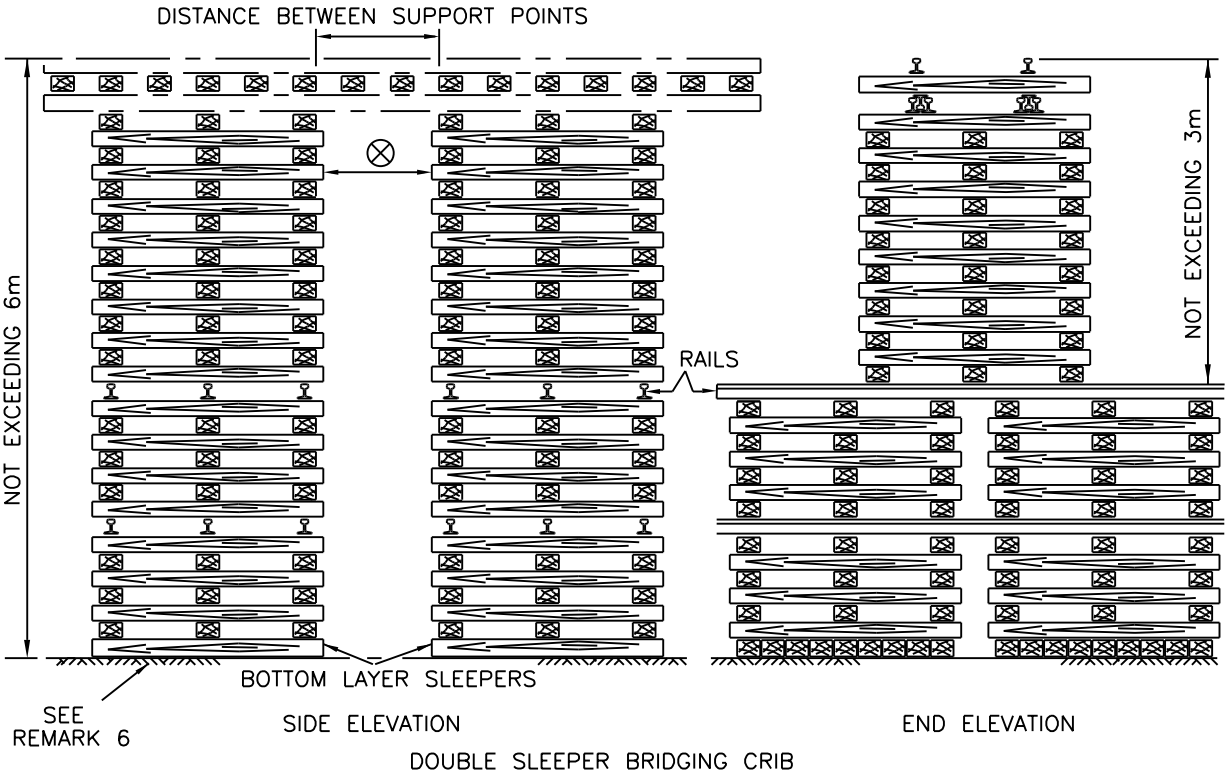

DOUBLE SLEEPER BRIDGING CRIB

REMARKS:

1. READ IN CONJUNCTION WITH CLAUSE 3.6.
2. ⊗ DENOTES REQUIRED SPAN (SEE ANNEXURE 7 SHT 1).
3. NOT TO BE USED ON LINES CARRYING HEAVY LOADS.
4. FOR BOTTOM RAIL GIRDER SEE ANEXURE 7 SHT 1.
5. IN ALL CASES THE BOTTOM LAYER OF SLEEPERS MUST BE PLACED PARALLEL TO THE TRACK AND CLOSE LAID.
6. A QUALIFIED PROFESSIONAL ENGINEER MUST ENSURE THAT THE SUPERIMPOSED LOAD DOES NOT EXCEED THE BEARING PRESSURE OF THE GROUND.

TEMPORARY TRACK SUPPORT : BRIDGING CRIBS

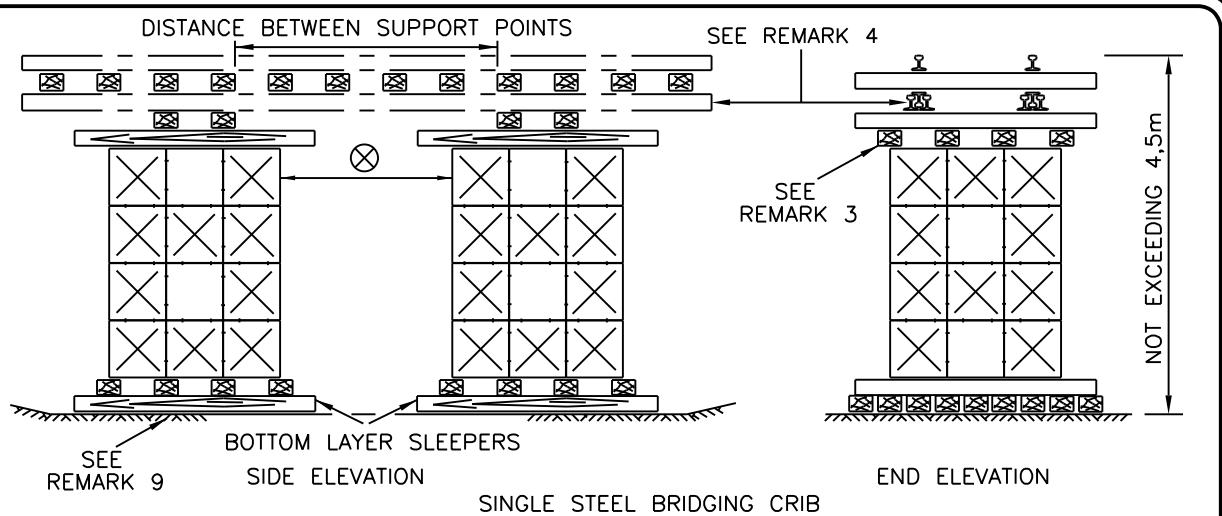

SINGLE STEEL BRIDGING CRIB
(SEE NOTE 5)

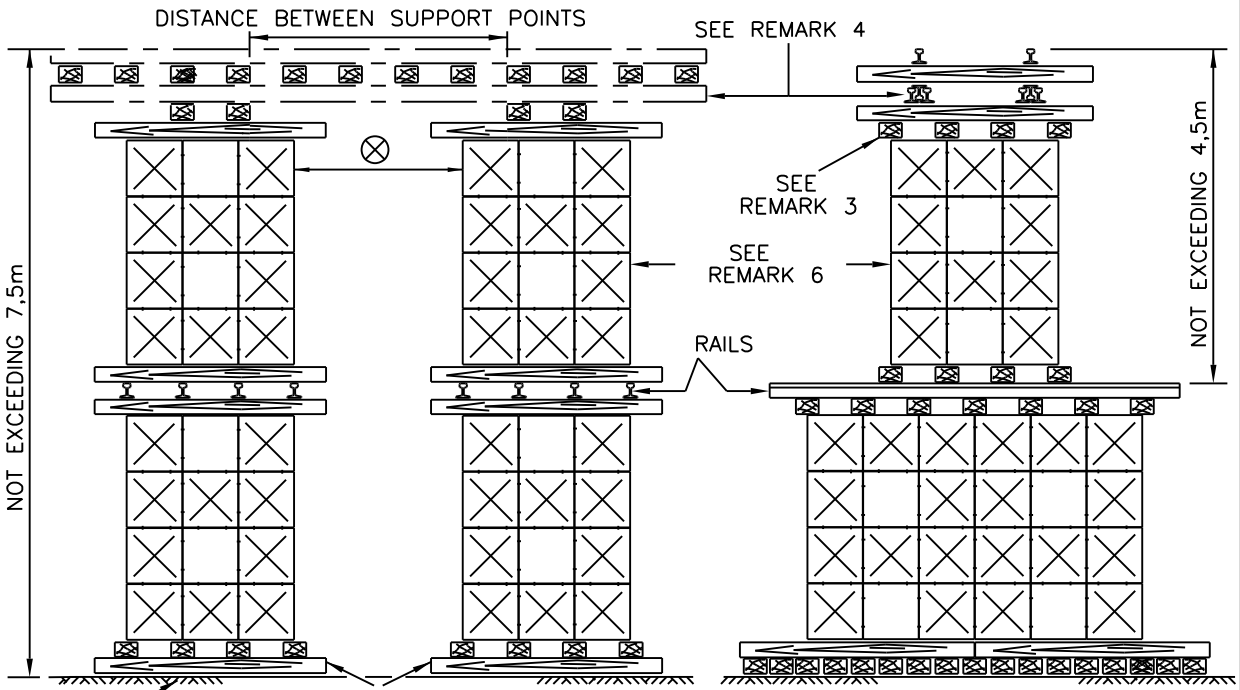

DOUBLE STEEL BRIDGING CRIB

REMARKS:

1. READ IN CONJUNCTION WITH CLAUSE 3.6.
2. IN ALL CASES THE BOTTOM LAYER OF SLEEPERS MUST BE PLACED PARALLEL TO THE TRACK AND CLOSE LAID.
3. SLEEPERS MUST BE PLACED AS SHOWN TO AVOID OVERSTRESSING THE CRIBS.
4. FOR BOTTOM RAIL GIRDER SEE ANEXURE 7 SHT 1.
5. ⊗ DENOTES REQUIRED SPAN. (DISTANCE BETWEEN SUPPORT POINTS MINUS 1 200mm).
6. FOR STEEL CRIBS SEE DRAWING BE 6115 M.
7. SLEEPERS OR SUITABLE TIMBERS.
8. NOT TO BE USED ON LINES CARRYING HEAVY LOADS.
9. A QUALIFIED PROFESSIONAL ENGINEER MUST ENSURE THAT THE SUPERIMPOSED LOAD DOES NOT EXCEED THE BEARING PRESSURE OF THE GROUND.

FASTENING OF HARDWOOD BRIDGE SLEEPERS

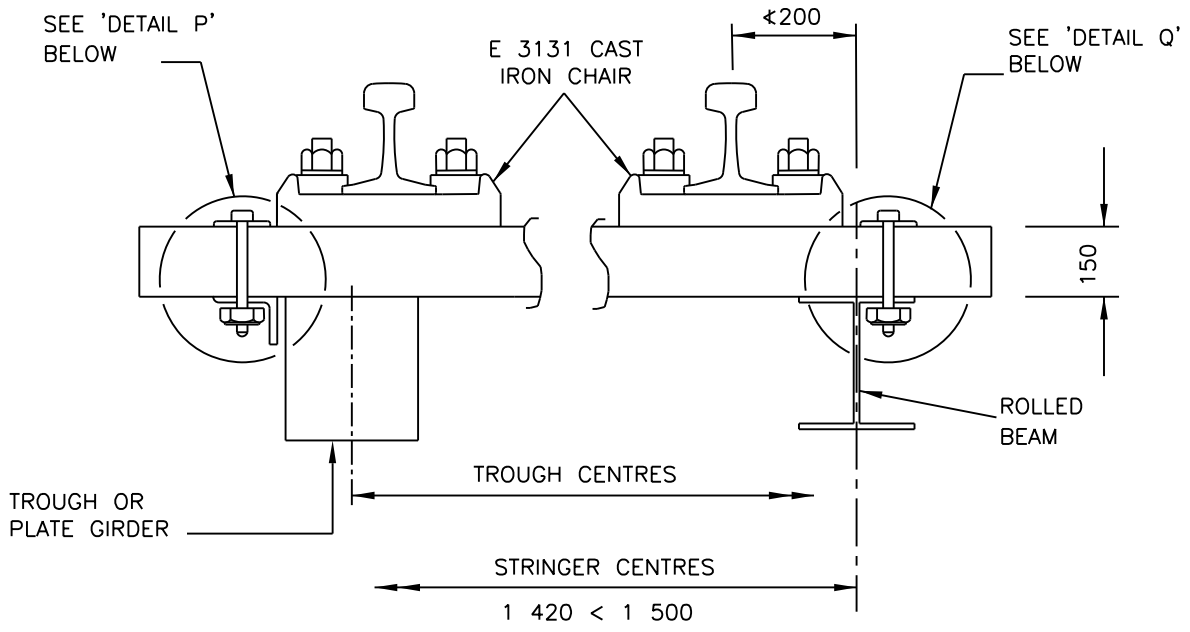

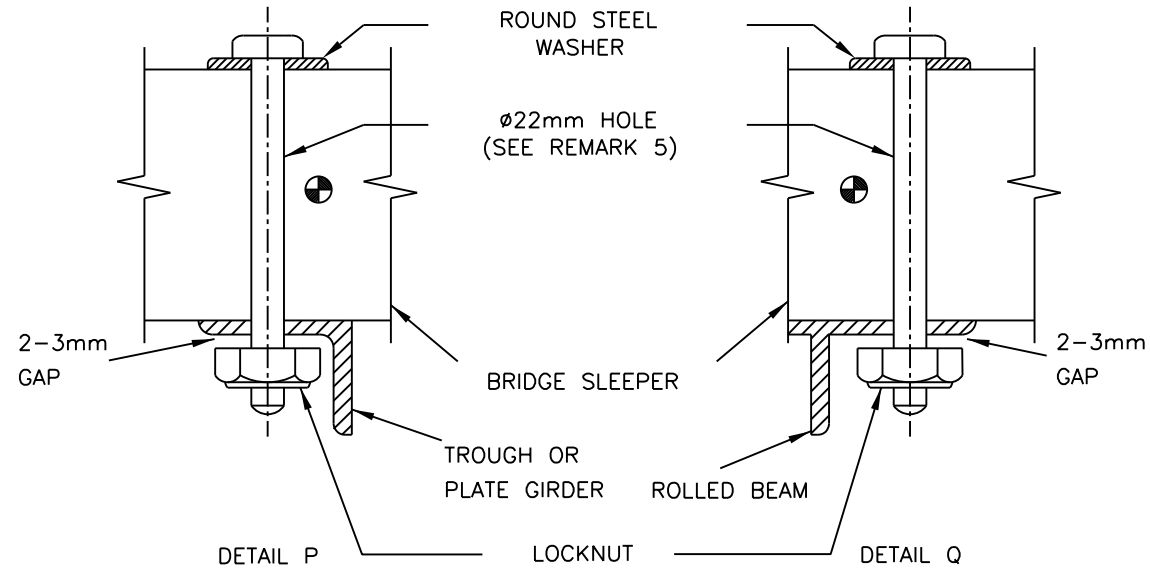

REMARKS:

1. SLEEPER BOLTS ARE INTENDED TO LOCATE THE SLEEPERS LATERALLY AND LONGITUDINALLY BUT NOT VERTICALLY. FOR THIS REASON NUTS SHOULD BE TIGHTENED SO AS TO PROVIDE A 2mm TO 3mm GAP WHICH WILL PERMIT VERTICAL MOVEMENT CAUSED BY THE FLEXING OF THE RAIL UNDER LOAD.
2. SEE CLAUSE 3.5.7.
3. ⊕ BOLT & NUT, M20 SQUARE HEAD, 230mm LONG WITH LOCKNUT ("NYLOCK OR CLEVELOCK").
4. PLACE BOLT WITH NUT AT THE BOTTOM.
5. USE THE DRILLING JIG FOR SLEEPERS ON STEEL BRIDGES. SEE ANNEXURE 8 SHEET 3 FOR DETAIL.

FASTENING OF LAMINATED TIMBER BRIDGE SLEEPERS

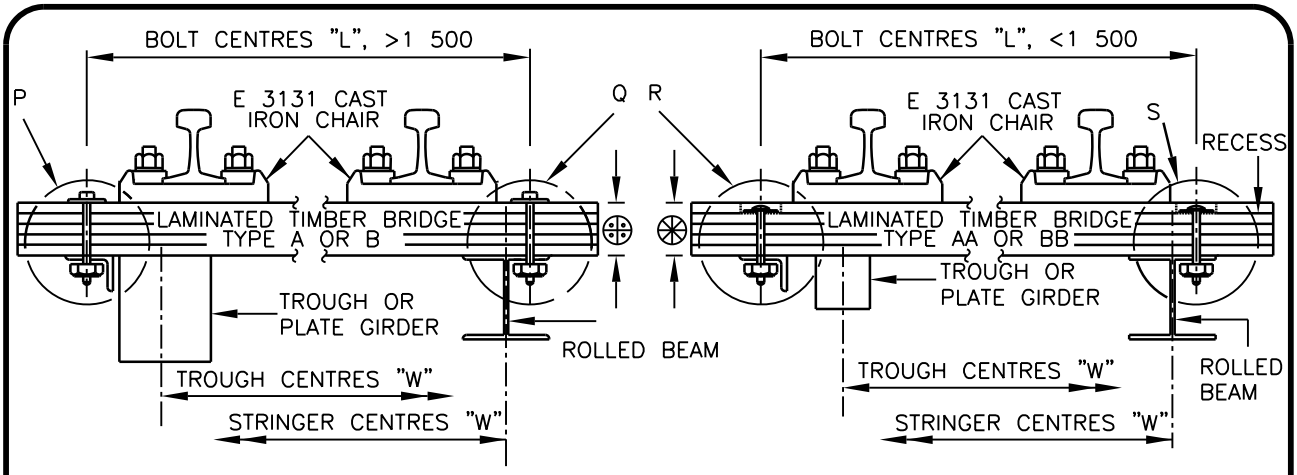

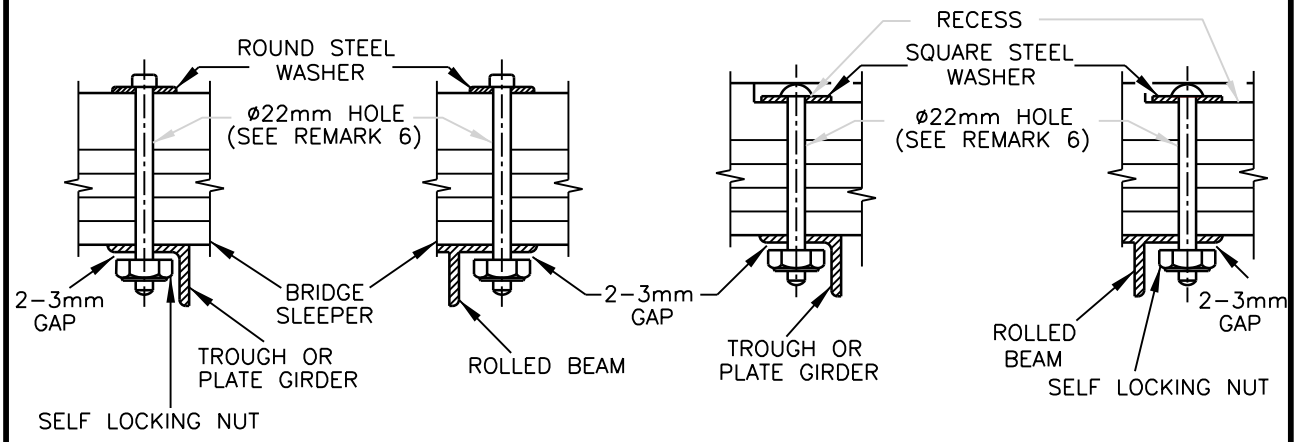

W	L	BRIDGE SLEEPER REQUIRED			STORES STOCK ITEM (SECTION 53)
		TYPE	SIZE	RECESS	
LESS THAN 1 200	MORE THAN 1 500	A	2 100x250x160	NO	911 691
	LESS THAN 1 500	AA		YES	911 706
MORE THAN 1 200	MORE THAN 1 500	B	2 100x250x190	NO	or 911 718 911 743
	LESS THAN 1 500	BB		YES	911 731

DESCRIPTION	SIZE mm	STORES STOCK ITEM (SECTION 53)
SQUARE STEEL WASHER	75 x 75 x 6	711 550
ROUND STEEL WASHER	OUTSIDE ø=52mm HOLE ø=26mm THICKNESS=5mm	711 776
SELF-LOCKING NUT	–	710 936
M20 SQUARE HEAD	230 LONG	214 831
	255 LONG	214 843
M20 CARRIAGE BOLT	200 LONG	212 249
	230 LONG	212 250

REMARKS:

1. SLEEPER BOLTS ARE INTENDED TO LOCATE THE SLEEPERS LATERALLY AND LONGITUDINALLY BUT NOT VERTICALLY. FOR THIS REASON NUTS SHOULD BE TIGHTENED SO AS TO PROVIDE A 2mm TO 3mm GAP WHICH WILL PERMIT VERTICAL MOVEMENT CAUSED BY THE FLEXING OF THE RAIL UNDER LOAD.
2. BOLT & NUT, M20 SQUARE HEAD, 230mm LONG FOR TYPE A AND 255mm LONG FOR TYPE B LAMINATED SLEEPERS.
3. M20 CUP HEAD (ROUND HEAD) CARRIAGE BOLT, 200mm LONG FOR TYPE AA AND 230mm LONG FOR TYPE BB LAMINATED SLEEPERS.
4. ⊕ 160 (TYPE A) AND 190 (TYPE B).
5. ⊛ 160 (TYPE AA) AND 190 (TYPE BB).
6. USE THE DRILLING JIG FOR SLEEPERS ON STEEL BRIDGES. SEE ANNEXURE 8 SHEET 3 FOR DETAIL.
7. IF ??? RAILS ARE USED ON THE OUTSIDE OF THE RUNNING RAIL, 2,4m SLEEPERS MUST BE USED.

FASTENING OF BRIDGE SLEEPERS : DRILLING JIG FOR SLEEPERS ON STEEL BRIDGES

ANNEXURE 8
SHEET 3 of 3

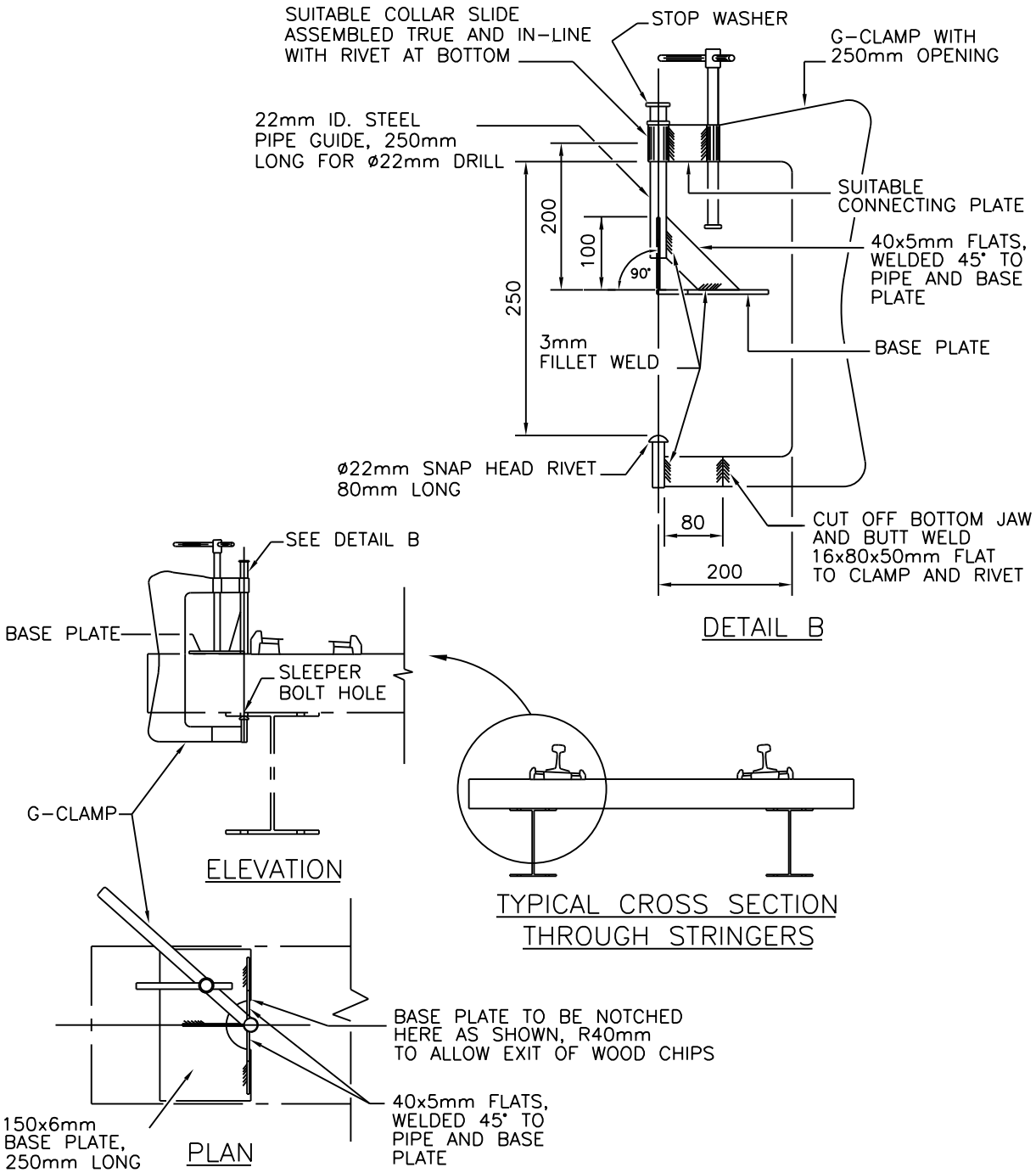

PROCEDURE:

1. REMOVE RAILS AND OLD SLEEPERS.
2. PLACE NEW SLEEPERS IN POSITION.
3. FASTEN E-3131 CHAIRS TO SLEEPERS IN CORRECT POSITIONS.
4. FASTEN RAILS TO CHAIRS.
5. ALIGN TRACK.
6. CLAMP JIG TO SLEEPER WITH THE SNAP HEAD RIVET LOCATING IN THE HOLE IN THE BOTTOM OF THE STRINGER.
7. DRILL HOLE WITH A SPECIAL ø22mm X 500mm LONG DRILL BIT (SOMTA CODE 2592200) FROM THE TOP THROUGH THE COLLAR SLIDE.
8. REMOVE JIG AND FASTEN SLEEPER BOLT.

CURVE OFFSETS

ANNEXURE 9
SHEET 1 of 4

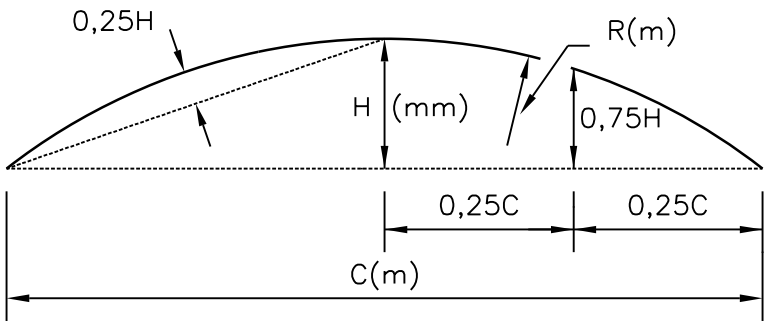

$$H = \frac{125 \times C \times C}{R}$$

$$H = \frac{125C^2}{R}$$

REMARK: DIMENSION H TO NEAREST 5mm (USE FORMULA IF MORE ACCURACY IS REQUIRED.)

RADIUS (m)	MIDDLE OFFSETS H(mm)							
	CHORDS C(m)							
	6		10		20		12,192	
	H	0,75H	H	0,75H	H	0,75H	H	0,75H
50	90	70	250	190	1 000	750	370	280
55	80	60	230	170	910	680	340	255
60	75	55	210	155	835	625	310	230
70	65	50	180	135	715	535	265	200
80	55	40	155	115	625	470	230	175
90	50	40	140	105	555	415	205	155
100	45	35	125	95	500	375	185	140
110	40	30	115	85	455	340	170	125
120	40	30	105	80	415	315	155	115
130	35	25	95	70	385	290	145	105
140	30	25	90	65	355	270	135	100
150	30	25	85	65	335	250	125	95
175	25	20	70	55	285	215	105	80
200	25	15	65	45	250	190	95	70
225	20	15	55	40	220	165	85	60
250	20	15	50	40	200	150	75	55
275	15	10	45	35	180	135	70	50
300	15	10	40	30	165	125	60	45
350	15	10	35	25	145	105	55	40
400	10	10	30	25	125	95	45	35
450	10	10	30	20	110	85	40	30
500	10	5	25	20	100	75	40	30
600	10	5	20	15	85	65	30	25
700	5	5	20	15	70	55	30	20
800	5	5	15	10	65	45	25	15
900	5	5	15	10	55	40	20	15
1 000	5	5	15	10	50	40	20	15
1 200	5	5	10	10	40	30	15	10
1 500	5	0	10	5	35	25	10	10
2 000	0	0	5	5	25	20	10	5
3 000	0	0	5	5	15	15	5	5

CURVES : GAUGE ADJUSTMENT

WITHOUT TRANSITION CURVES

WITH TRANSITION CURVES

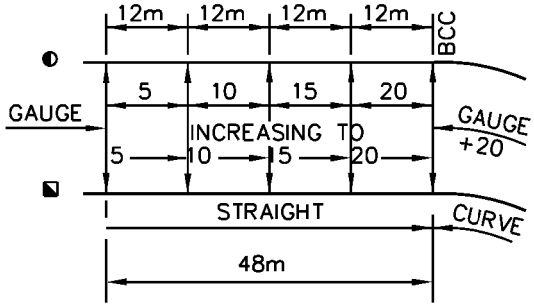

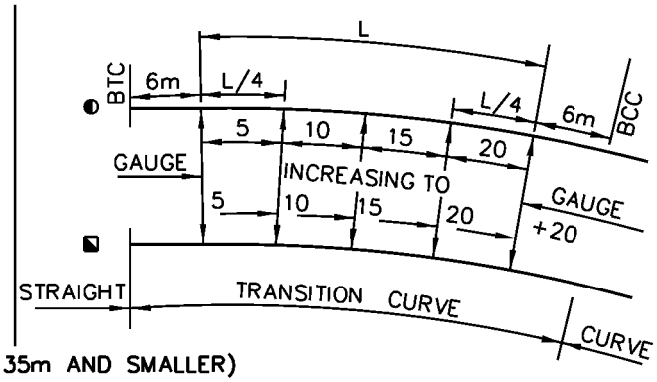

20mm (RADIUS 135m AND SMALLER)

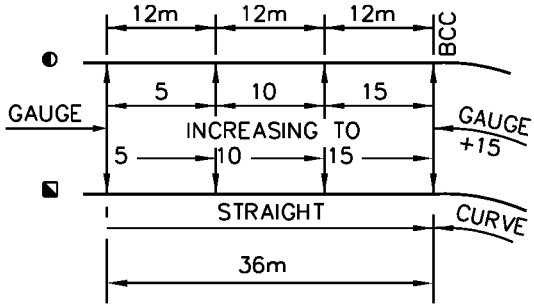

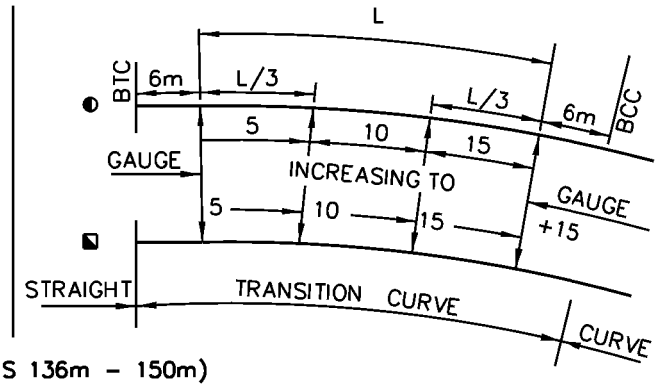

15mm (RADIUS 136m – 150m)

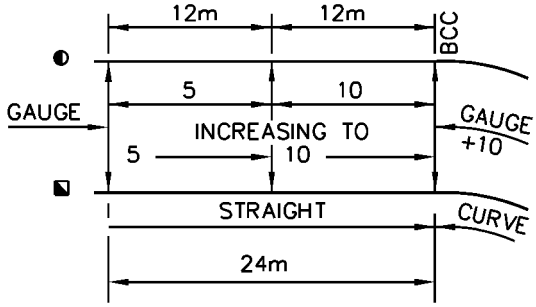

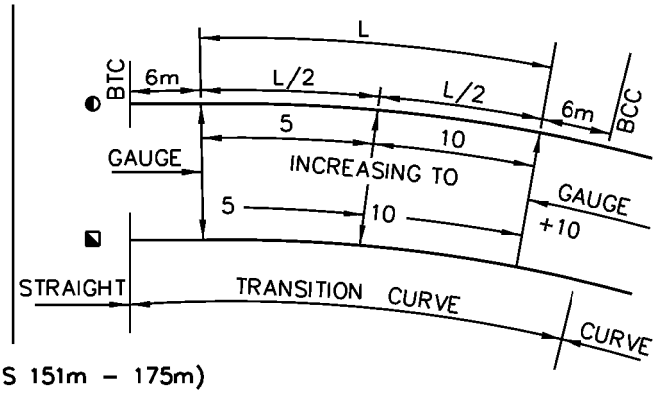

10mm (RADIUS 151m – 175m)

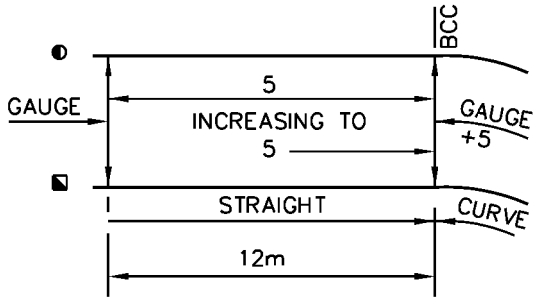

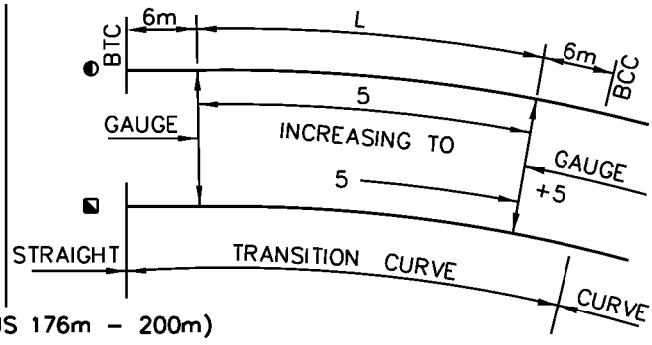

5mm (RADIUS 176m – 200m)

REMARKS:

1. FOR REMARKS SEE ANNEXURE 9 SHEET 3.

CURVES : GAUGE ADJUSTMENT, SIDE WEAR AND TEMPORARY TAPERED END PIECE

WITHOUT TRANSITION CURVES

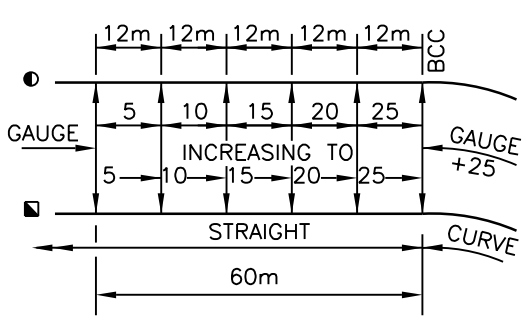

WITH TRANSITION CURVES

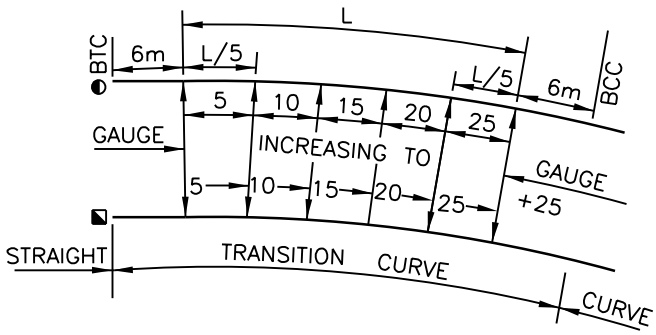

25mm

REMARKS:

1. ◐ GAUGE ADJUSTMENT FOR STEEL AND CONCRETE SLEEPERS. FOR LIMITATIONS SEE ANNEXURE 11 SHEETS 1 TO 3.
2. ◪ GAUGE ADJUSTMENT FOR WOODEN SLEEPERS. FOR LIMITATIONS SEE ANNEXURE 11 SHEET 4.

BTC INDICATES BEGINNING OF TRANSITION CURVE
BCC INDICATES BEGINNING OF CIRCULAR CURVE

MEASURING GAUGE ON SIDE-WORN RAILS

1. WHEN THE LOW LEG IS SIDEWORN, THE POINT TO MEASURE FROM IS THE SAME AS IN THE CASE OF THE HIGH LEG.
2. CHECK RAILS SHALL BE NOT LOWER THAN CLASS B. IN YARDS CLASS C IS PERMITTED.

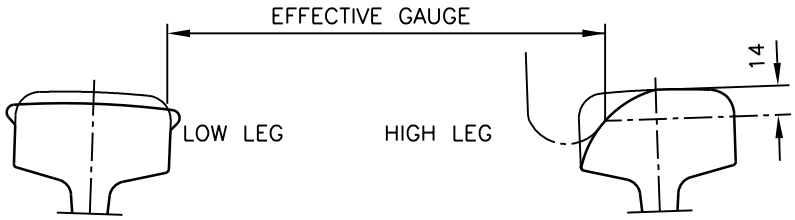

TEMPORARY TAPERED END PIECE

NO TRAIN SHALL BE PERMITTED THROUGH A CURVE WHILE ONLY A PORTION OF THE CHECK RAIL IS IN POSITION, UNLESS A TEMPORARY TAPERED END PIECE IS BOLTED TO THE LOOSE FISHPLATED END OF THE REMAINING CHECK RAIL.

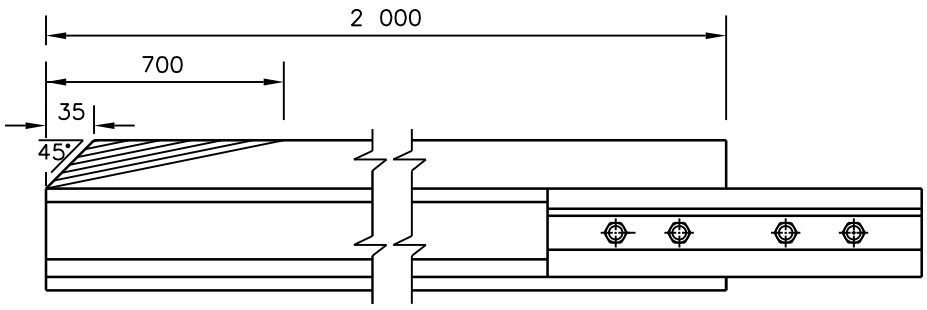

FRONT ELEVATION

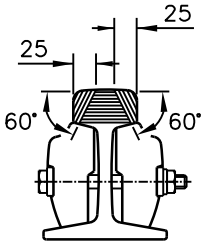

END ELEVATION

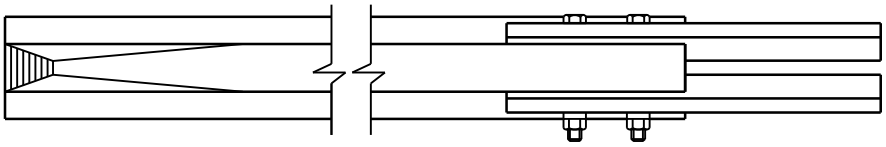

PLAN

SUPERELEVATION AND MAXIMUM PERMISSIBLE SPEED ON CURVES

TRACK GAUGE (mm)	1 065																610	
MAXIMUM SPEED (km/h)	160		100		90		80		60		50		40		30		40	
RADIUS OF CURVE (m)	ⓘ	⊟	ⓘ	⊟	ⓘ	⊟	ⓘ	⊟	ⓘ	⊟	ⓘ	⊟	ⓘ	⊟	ⓘ	⊟	ⓘ	⊟
50 – 90	–	–	–	–	–	–	–	–	–	–	–	–	–	–	–	–	15	20
60 – 89	–	–	–	–	–	–	–	–	–	–	–	–	–	–	–	–	15	20
90 – 99	40	100	35	100	35	100	35	100	35	90	30	70	30	60	30	30	20	20
100 – 109	40	100	35	100	35	100	35	100	35	90	30	70	30	60	30	30	20	20
110 – 119	50	90	35	90	35	90	35	90	35	90	30	60	30	60	30	30	20	20
120 – 139	50	90	40	90	40	90	40	90	40	80	30	60	30	60	30	30	20	20
140 – 159	50	90	40	90	40	90	40	80	40	80	40	60	40	60	30	30	20	20
160 – 179	50	80	40	80	40	80	40	80	40	70	40	60	40	50	30	30	25	15
180 – 199	60	80	50	80	50	80	40	70	40	70	40	50	40	50	30	30	25	15
200 – 219	60	80	50	80	50	80	50	70	50	70	40	50	40	40	30	30	30	15
220 – 239	60	80	50	80	50	80	50	70	50	70	50	50	40	40	30	30	30	15
240 – 269	70	70	50	70	50	70	50	70	50	60	50	50	40	30	30	30	30	15
270 – 299	70	70	60	70	60	70	50	60	50	60	50	40	40	30	30	20	35	15
300 – 349	70	70	60	70	60	70	60	60	60	60	50	40	40	30	30	20	35	15
350 – 399	80	60	60	60	60	60	60	60	60	50	50	30	40	20	30	20	40	15
400 – 449	80	60	70	60	70	60	70	60	60	40	50	20	40	20	30	10	40	10
450 – 499	90	60	70	60	70	60	70	50	60	40	50	20	40	20	30	10	40	10
500 – 549	90	60	80	60	80	60	70	50	60	30	50	10	40	20	30	10	40	5
550 – 599	100	50	80	50	80	50	80	50	60	30	50	10	40	20	30	10	40	5
600 – 699	100	50	80	50	80	50	80	50	60	30	50	10	40	10	30	10	40	0
700 – 799	100	50	90	50	90	50	80	40	60	20	50	10	40	10	30	10	40	0
800 – 849	110	40	90	40	90	40	80	40	60	20	50	10	40	10	30	10	40	0
850 – 899	120	40	100	40	90	40	80	40	60	20	50	10	40	10	30	0	40	0
900 – 999	120	40	100	40	90	40	80	30	60	20	50	10	40	10	30	0	40	0
1000 – 1199	130	40	100	40	90	40	80	30	60	20	50	10	40	10	30	0	40	0
1200 – 1499	140	30	100	30	90	30	80	20	60	10	50	10	40	10	30	0	40	0
1500 – 1699	150	20	100	20	90	20	80	20	60	10	50	0	40	0	30	0	40	0
1700 – 1999	160	20	100	20	90	20	80	20	60	10	50	0	40	0	30	0	40	0
2000 – 2999	160	10	100	10	90	10	80	10	60	10	50	0	40	0	30	0	40	0
3000 – – –	160	0	100	0	90	0	80	0	60	0	50	0	40	0	30	0	40	0

REMARKS:

1. NEW LINES MUST NOT BE BUILT FOR MAXIMUM SPEEDS OF 90 AND 50km/h. THIS INFORMATION IS INCLUDED FOR EXISTING LINES WHERE THESE MAXIMUM SPEEDS ARE AT PRESENT IN OPERATION.
2. CANT FOR EACH CURVE IN TUNNELS WILL BE DETERMINED SEPARATELY BY THE ENGINEER IN CHARGE OF TRACK MAINTENANCE.
3. FOR 160km/h SECTIONS, 2 SPEED BOARDS MUST BE ERECTED. THE NORMAL YELLOW BOARD AND A BLUE BOARD WITH WHITE FIGURES DIRECTLY BELOW THE YELLOW BOARD.
4. ⓘ DENOTES SPEED IN km/h.
5. ⊟ DENOTES CANT IN mm.
6. READ TOGETHER WITH SUB–CLAUSE 9.3.4.
7. FOR A SPEED OF 15 km/h (1 065mm GAUGE) HALF THE CANT OF 30 km/h MUST BE USED.

TRACK SIGN BOARDS : PERMANENT

ANNEXURE 10
SHEET 1 of 4

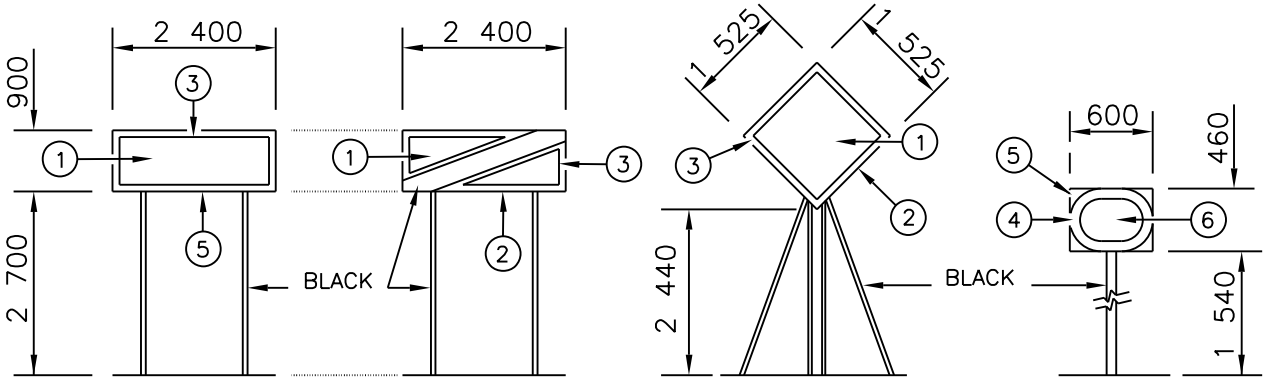

WARNING BOARD | DISTANCE BOARD FOR C.T.C. | WATERING BOARD | WHISTLE BOARD

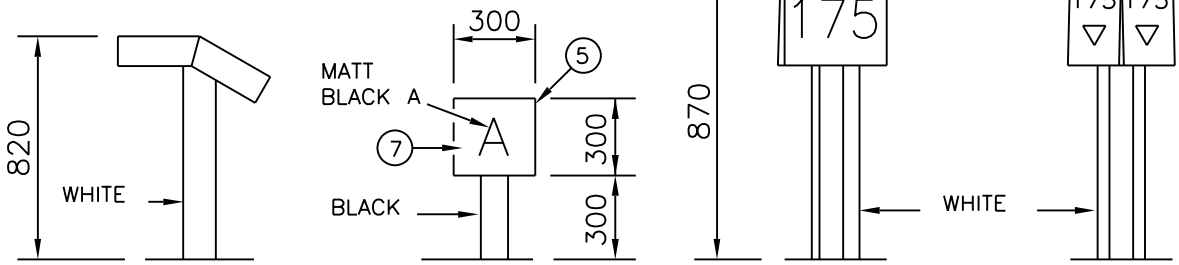

GRADE POST | APPARATUS INDICATION BOARD (MAY ALSO BE ROUND IN SHAPE) | KILOMETRE POSTS

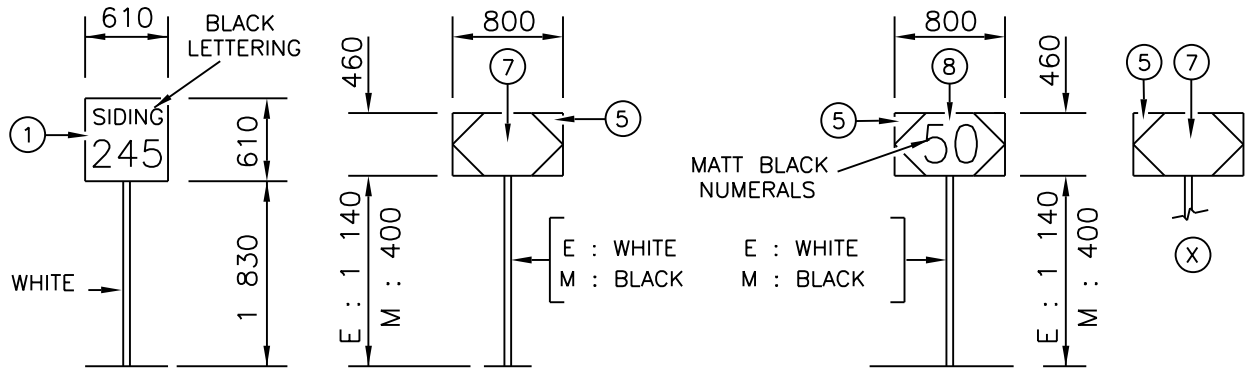

PRIVATE SIDING BOARD | SPEED DE-RESTRICTION BOARD | SPEED RESTRICTION AND DE-RESTRICTION BOARD

REMARKS:

1. (1) WHITE.
2. (2) REVERSE SIDE – BLACK.
3. (3) REFLECTIVE WHITE BORDER OF 100mm.
4. (4) REFLECTIVE WHITE BORDER OF 75mm.
5. (5) DOVE GREY CHROMADEK REVERSE SIDE.
6. (6) PIGMENTED WHITE. (REFLECTED WHITE)
7. (7) REFLECTIVE WHITE.
8. (8) REFLECTIVE YELLOW.
9. (X) DE-RESTRICTION ON REVERSE SIDE.
10. E : SINGLE LINES.
11. M : MULTIPLE LINES.
12. FOR FURTHER DETAILS SEE DRAWING D-184 SHEETS 2 AND 4 AND D-176 SHEETS 2, 3 AND 5.

TRACK SIGN BOARDS : TEMPORARY

ANNEXURE 10
SHEET 2 of 4

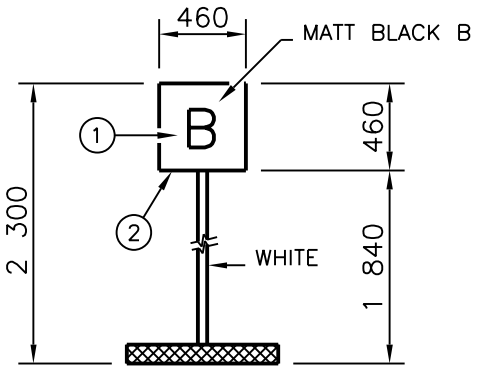

TAMPING MACHINE WARNING BOARD

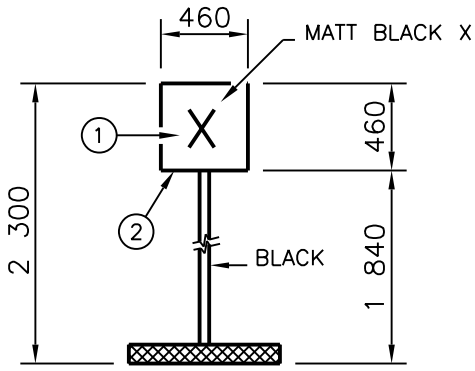

TAMPING MACHINE X BOARD
(SEE REMARK 5)

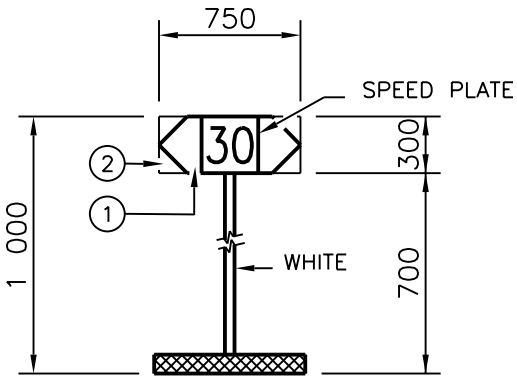

SPEED REDUCTION BOARD
(SEE REMARKS 6 & 8)

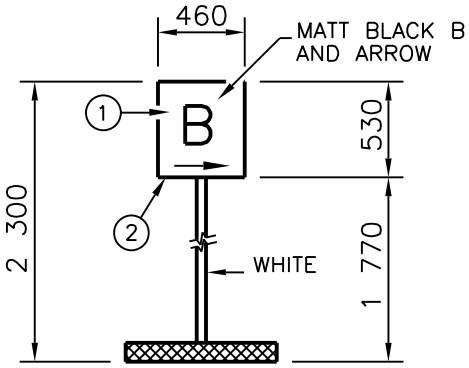

TAMPING MACHINE INDICATION BOARD
(SEE REMARK 7)

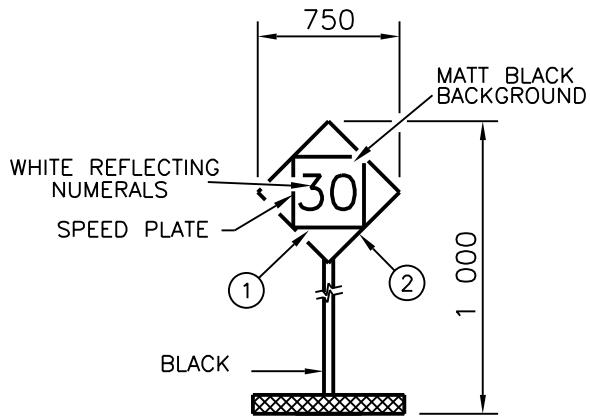

BEGINNING OF DANGER ZONE
(SEE REMARKS 6 & 8)

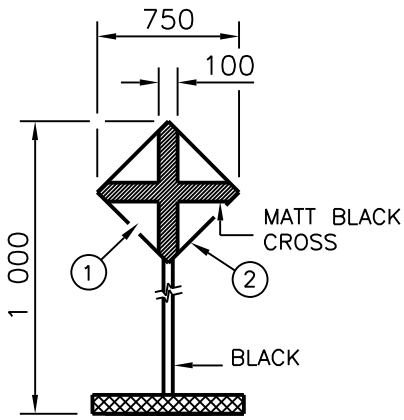

END OF DANGER ZONE
(SEE REMARK 6)

REMARKS:

1. (1) REFLECTIVE YELLOW.
2. (2) DOVE GREY CHROMADEK REVERSE SIDE.
3. FOR SIGN BOARD POSITIONING SEE ANNEXURE 10 SHEET 3.
4. FOR FURTHER DETAILS SEE DRAWING D–184 SHEET 1.
5. AT OFFTRACK PLATFORM.
6. THE TOP OF THESE BOARDS MUST NEVER BE MORE THAN 865mm ABOVE RAIL LEVEL.
7. TO BE PLACED AT ROADSIDE TO INDICATE ACCESS TO WORKING SITE.
8. THE SPEED PLATE INSERT MUST INDICATE THE SAME SPEED ON BOTH SIDES.

TRACK SIGN BOARDS : LAYOUT

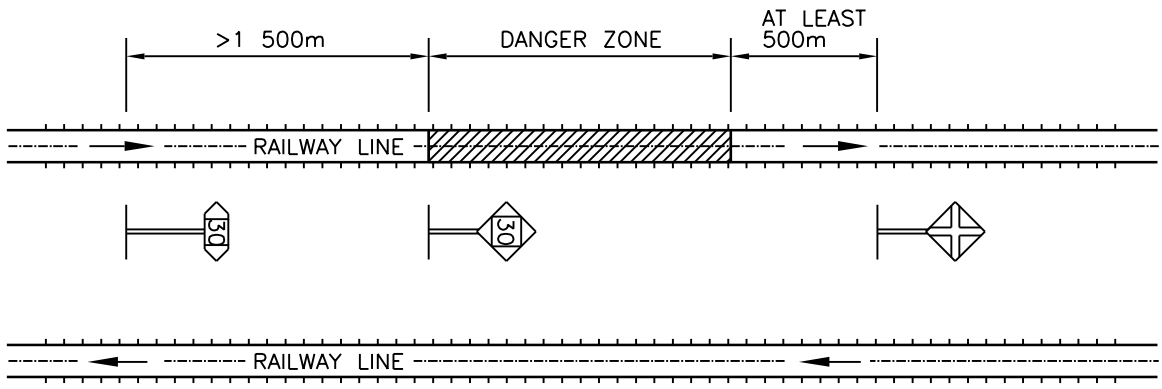

MULTIPLE UNI–DIRECTIONAL LINES

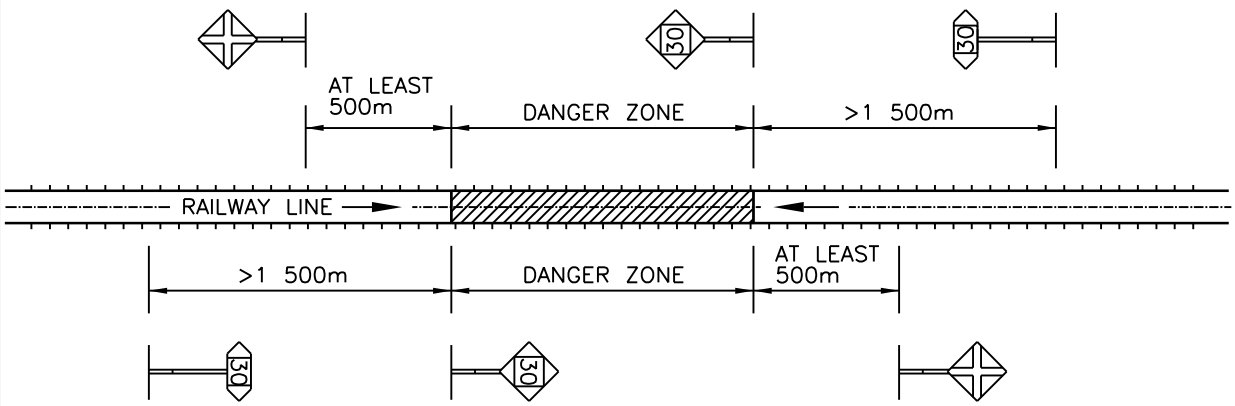

SINGLE OR BI–DIRECTIONAL LINES

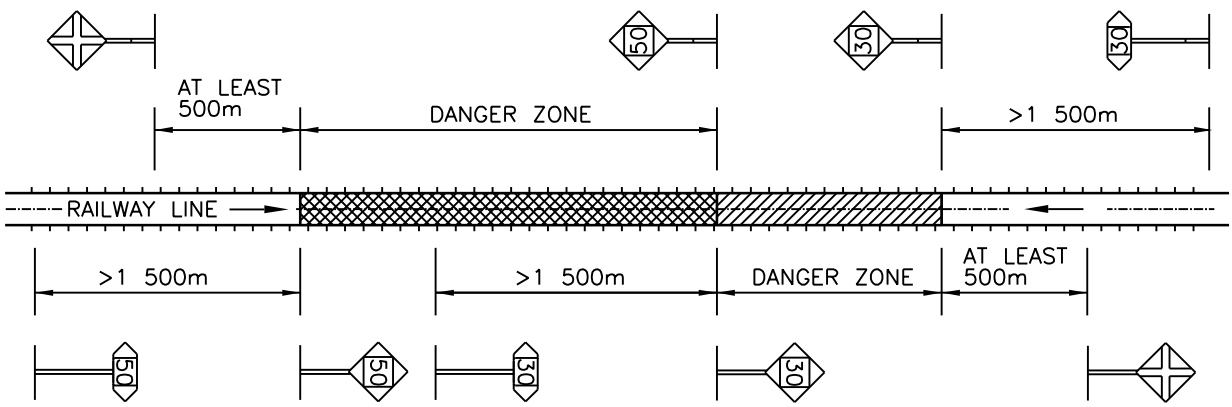

TANDEM SPEED REDUCTION ON A SINGLE LINE WITH BI–DIRECTIONAL TRAFFIC

TRACK SIGN BOARDS : LEVEL CROSSINGS

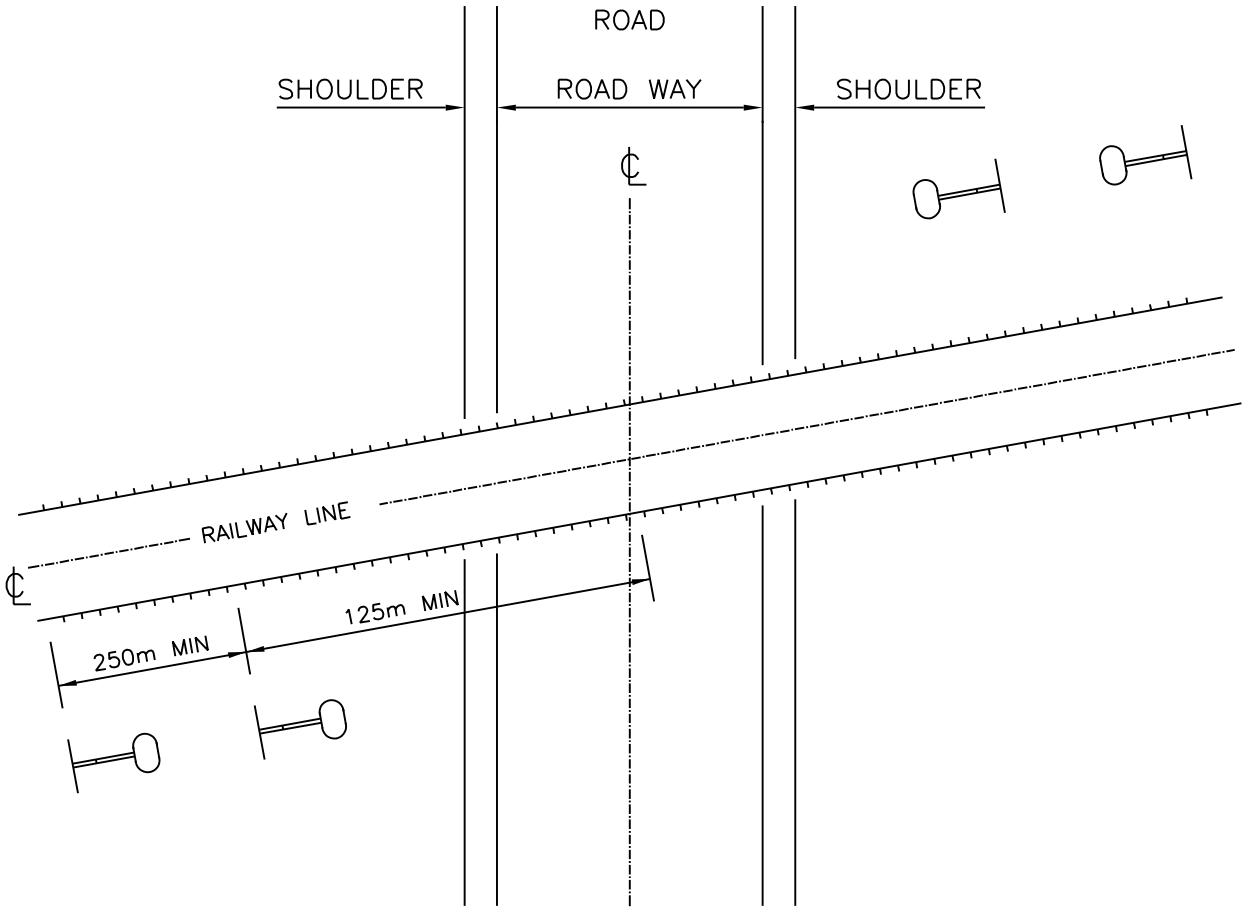

REMARKS:

1. FOR POSITIONING OF SIGNS SEE CHAPTER 9.
2. SEE BBC0930 VERSION 1 FOR TOLERANCES APPLICABLE TO SIGNING AND VISIBILITY DISTANCES AT ROAD–RAIL LEVELCROSSING INSTALLATIONS.

SLEEPER FASTENINGS : FIST BTR.

ANNEXURE 11
SHEET 1 of 4

SLEEPER	RAIL	SPRING CLIP	PIN	GAUGE PLATE COMBINATIONS				
				OUTER	INNER	GAUGE (mm)	INNER	OUTER
FY	UIC-60	FY BROWN	FY BLUE	G	G	1 065	G	G
				G	G	1 070	H1	H2
	S-60	FY BLUE		H2	H1	1 075	H1	H2
	57kg			F	F	1 068	F	F
	48kg	F4 RED	F4 BLACK	L1	L2	1 065	L2	L1
				L1	L2	1 071	L1	L2
				L2	L1	1 077	L1	L2
F4/F1	57kg			E	E	1 065	E	E
				E	E	1 070	D1	D2
				D2	D1	1 075	D1	D2
	48kg			B1	B2	1 065	B2	B1
				B1	B2	1 070	B1	B2
				B2	B1	1 075	B1	B2
	40kg			K1	K2	1 065	K2	K1
				B1	B2	1 070	B2	B1
				B1	B2	1 075	B1	B2
				B2	B1	1 080	B1	B2
F3	57kg			D2	D1	1 067	D1	D2
	48kg			B2	B1	1 067	B1	B2
F2	57kg	F2 BLACK		DD2	DD1	1 067	DD1	DD2
	48kg			BB2	BB1	1 067	BB1	BB2

SLEEPER FASTENINGS : PANDROL

ANNEXURE 11
SHEET 2 of 4

SLEEPER	RAIL	GAUGE PLATE COMBINATIONS				
		OUTER	INNER	GAUGE (mm)	INNER	OUTER
PY	UIC-60	UIC-6-9 UIC-6-9 UIC-0-4 UIC-0-4	UIC-6-9 UIC-6-9 UIC-11-13 UIC-11-13	1 062 1 066 1 071 1 076	UIC-0-4 UIC-6-9 UIC-6-9 UIC-11-13	UIC-11-13 UIC-6-9 UIC-6-9 UIC-0-4
	S-60	T6 T6 T0 T0	T6 T6 T11 T11	1 062 1 066 1 071 1 076	T0 T6 T6 T11	T11 T6 T6 T0
	57kg	T17 T14 T11 T11 T6 T6 T0 T0	T6 T11 T14 T14 T17 T17 T23 T23	1 062 1 065 1 067 1 069 1 073 1 077 1 082 1 087	T11 T11 T11 T14 T14 T17 T17 T23	T14 T14 T14 T11 T11 T6 T6 T0
	48kg	T23 T23 T17	T17 T17 T23	1 067 1 072 1 077	T17 T23 T23	T23 T17 T17
P2	57kg	T11 T6 T0 T0	T0 T6 T11 T11	1 060 1 064 1 069 1 074	T6 T6 T6 T11	T6 T6 T6 T0
	48kg	T17 T17 T11 T11 T6	T11 T11 T17 T17 T23	1 064 1 069 1 074 1 078 1 082	T11 T17 T17 T23 T23	T17 T11 T11 T6 T6
	40kg	T23 T17 T17 T17 T11 T11	T6 T11 T11 T11 T17 T17	1 060 1 065 1 070 1 075 1 080 1 084	T6 T6 T11 T17 T17 T23	T23 T23 T17 T11 T11 T6
P1	57kg	T6 T0	T0 T6	1 062 1 067	T6 T6	T0 T0
	48kg	T17 T11 T6 T6 T0	T6 T11 T17 T17 T23	1 062 1 067 1 071 1 075 1 080	T11 T11 T11 T17 T17	T11 T11 T11 T6 T6
	40kg	T17 T17 T11 T6 T6	T6 T6 T11 T17 T17	1 063 1 068 1 073 1 077 1 081	T6 T11 T11 T11 T17	T17 T11 T11 T11 T6

STEEL SLEEPER FASTENINGS : E-3277

SLEEPER	RAIL	CLIP COMBINATIONS : E-3085 / E-3277				
		OUTER	INNER	GAUGE (mm)	INNER	OUTER
E-3085 E-3277	48kg	B	B	1 060	E	D
		B	B	1 065	A	C
		A	C	1 070	A	C
		A	C	1 075	B	B
		E	D	1 080	B	B
		E	D	1 085	C	A
	40kg	C	A	1 061	E	D
		C	A	1 066	A	C
		B	B	1 071	A	C
		B	B	1 076	B	B
		A	C	1 081	B	B
		A	C	1 086	C	A
	30kg	F2	B	1 065	B	F2
		F	C	1 070	B	F2
		F	C	1 075	C	F
		D	C	1 078	C	F
		C	F	1 083	C	F
		B	F2	1 088	C	F

WOOD SLEEPER FASTENINGS : E-3131

SLEEPER	RAIL	GAUGE PLATE COMBINATIONS : E-3131				
		OUTER	INNER	GAUGE (mm)	INNER	OUTER
WOOD WITH E-3131 CAST IRON CHAIRS	57kg	L	J	1 061	K	J
		K	N	1 066	L	J
		N	K	1 071	N	K
		N	K	1 074	K	N
		J	L	1 079	K	N
		J	L	1 084	L	J
	48kg	L	L	1 060	K	M
		K	M	1 065	K	M
		K	M	1 070	L	L
		K	M	1 075	M	K
		K	M	1 080	L	L
		K	M	1 085	M	K
	40kg	L	L	1 060	K	M
		K	M	1 065	K	M
		K	M	1 070	L	L
		K	M	1 075	M	K
		K	M	1 080	L	L
		K	M	1 085	M	K

CAST IRON CHAIRS E-3131 & E3300 NOT ALLOWED / DESIGNED FOR 60KG RAIL MASS. OPEN TRACK

METHOD OF STACKING WOOD SLEEPERS

ANNEXURE 12
SHEET 1 of 1

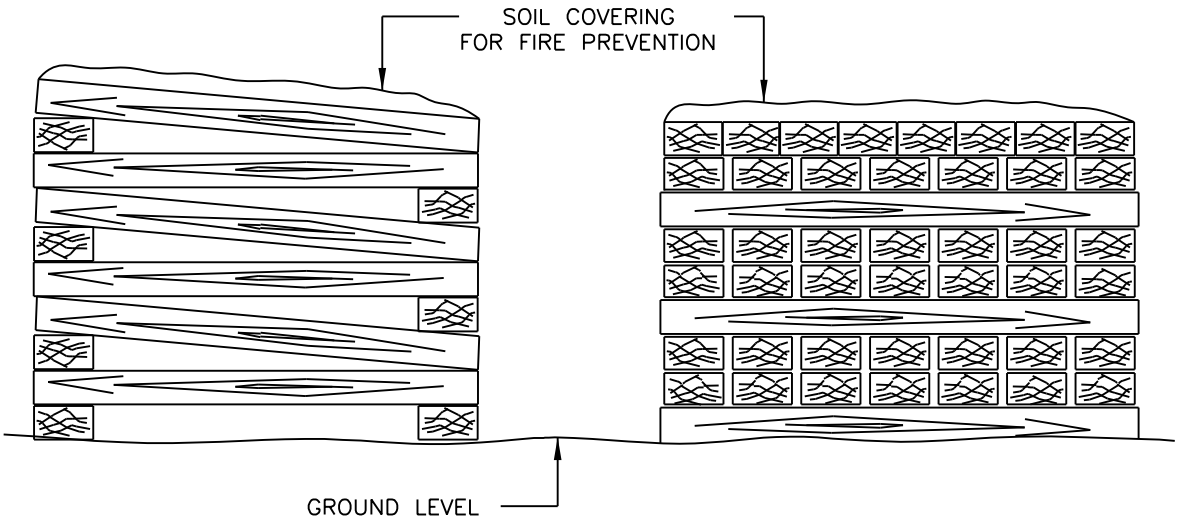

REMARKS:
1. SEE CLAUSE 10.1.5

METHOD OF UNLOADING CONCRETE SLEEPERS

ANNEXURE 13
SHEET 1 of 1

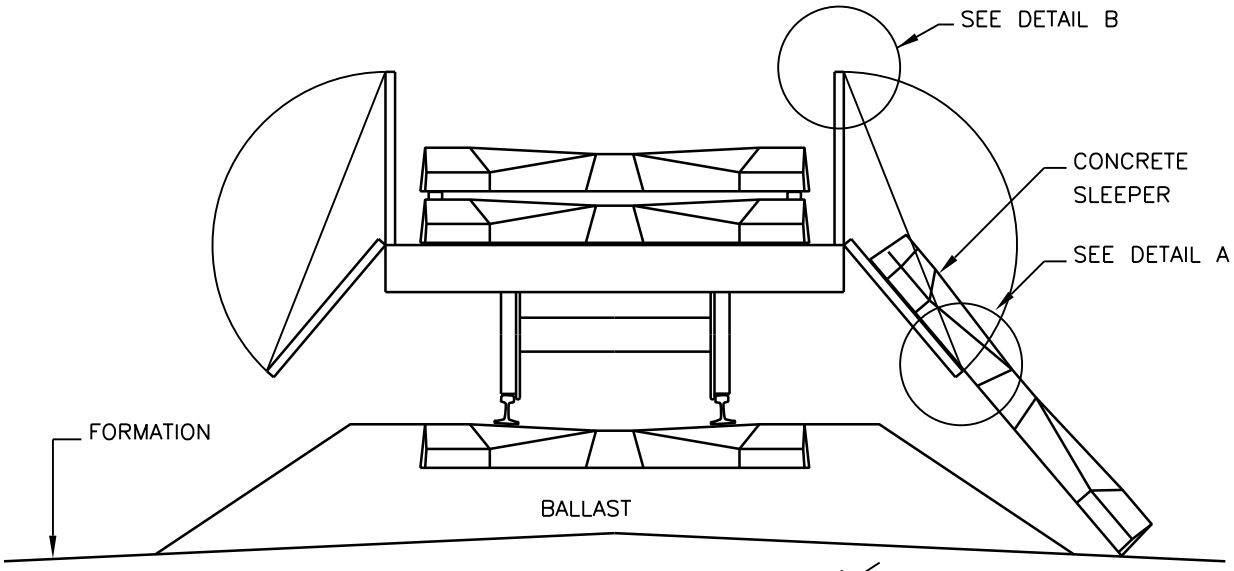

POSITION FOR UNLOADING

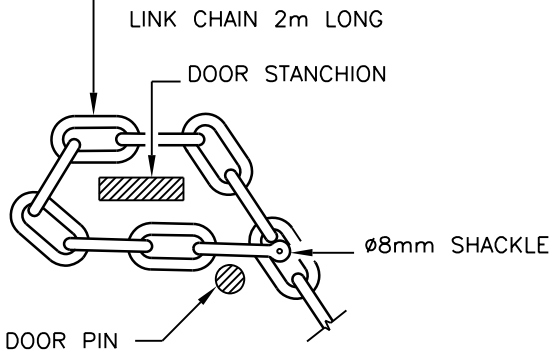

DETAIL B

MAKE A LOOP WITH THE SHACKLE AND CHAIN AND HANG AROUND DOOR STANCHION

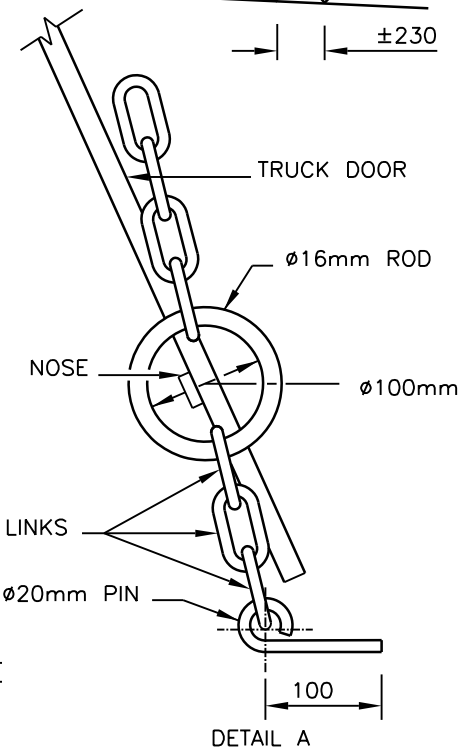

DETAIL A

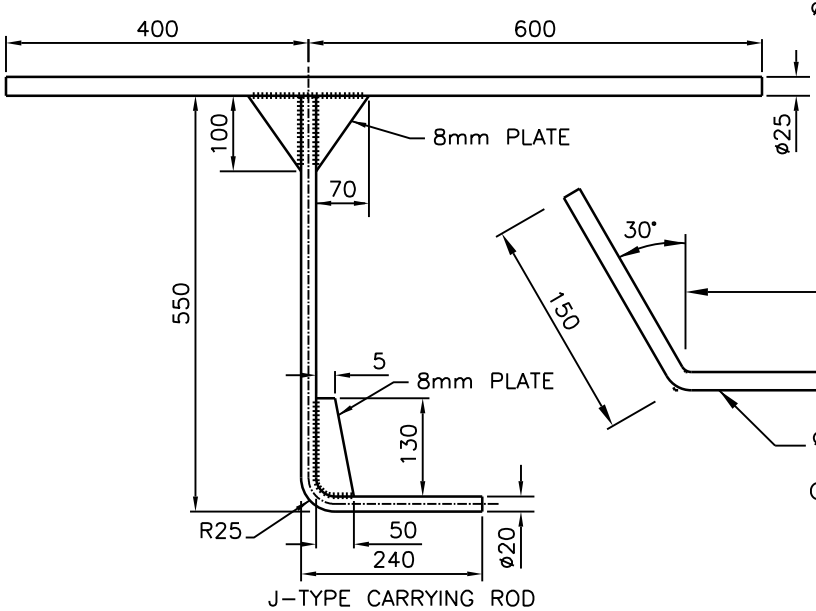

J–TYPE CARRYING ROD
(MAY ONLY BE USED TO MOVE SLEEPERS ON THE GROUND)

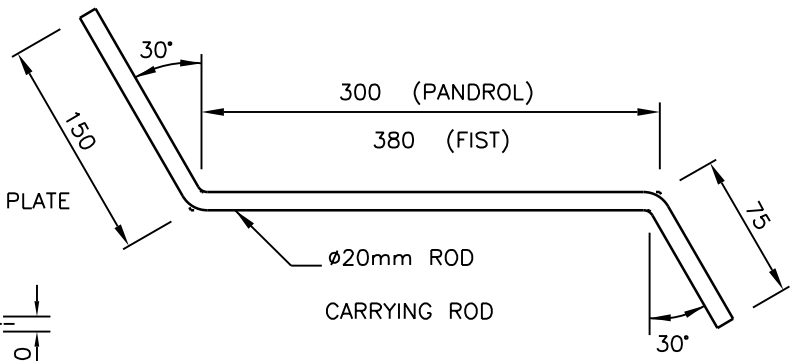

RAIL PROFILES

ANNEXURE 14
SHEET 1 of 6

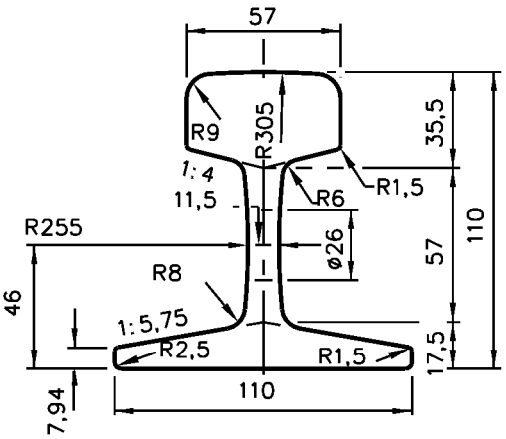

30kg/m

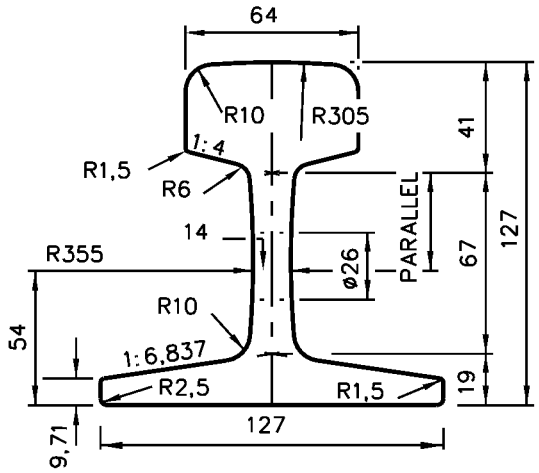

40kg/m

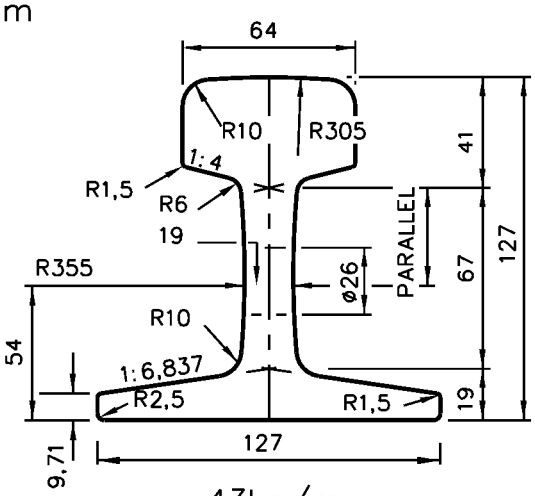

43kg/m
(HARBOUR AREAS)

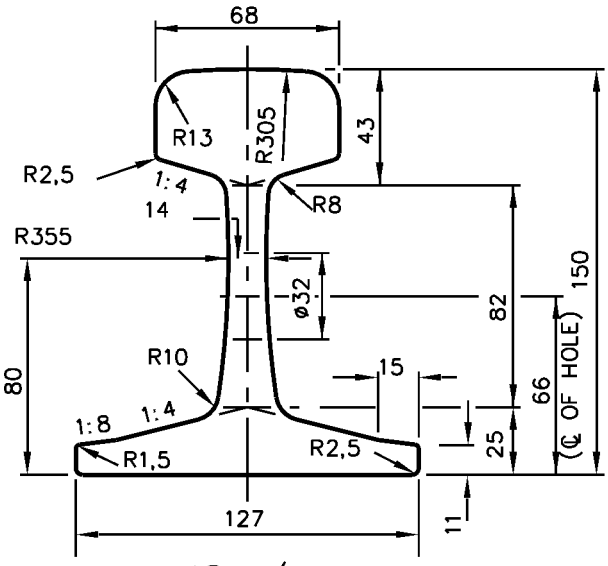

48kg/m

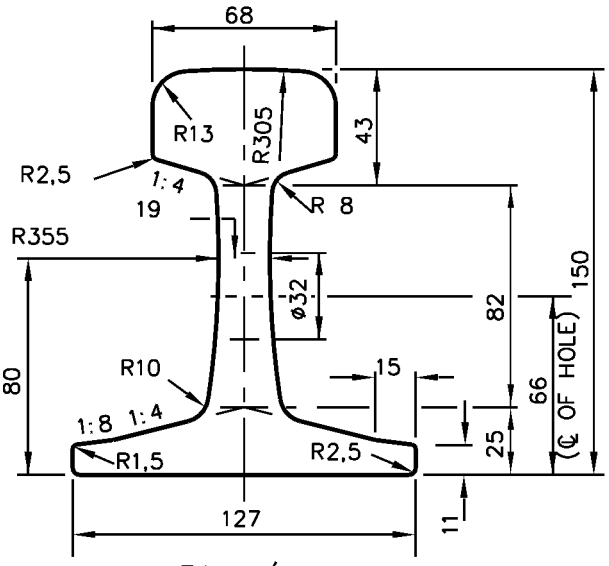

51kg/m
(FLEXIBLE POINTS BLADE
AND UNDERCUT STOCK RAIL)

REMARKS :
1. FOR PROPERTIES AND ROLL MARKS SEE ANNEXURE 14 SHEETS 4 TO 6

RAIL PROFILES

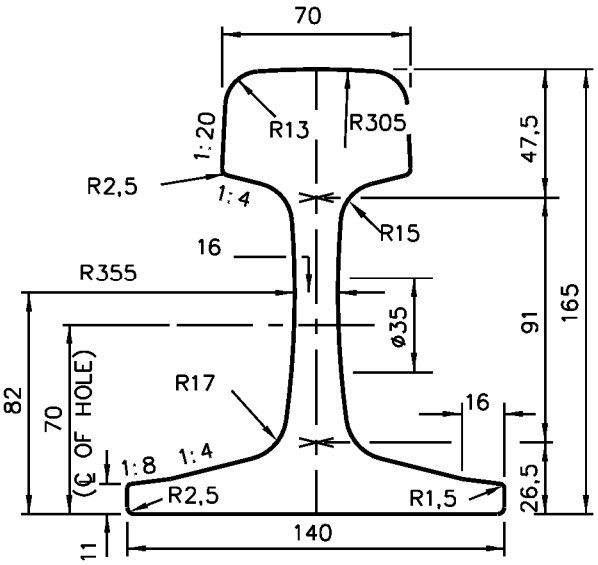

57kg/m

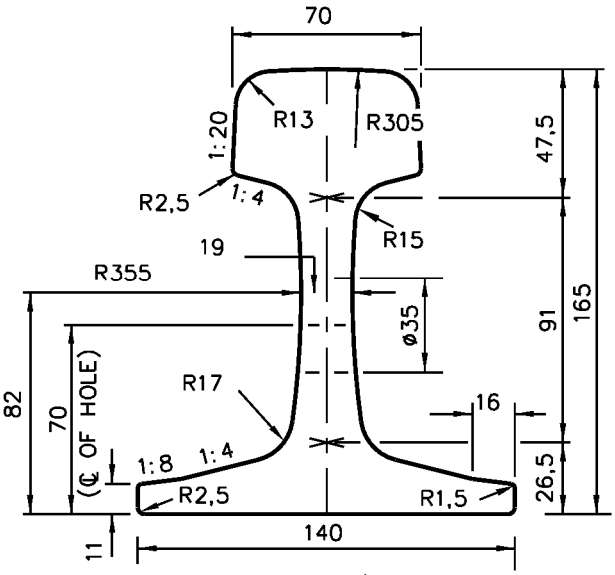

60kg/m

(FLEXIBLE POINTS BLADE
AND UNDERCUT STOCK RAIL)

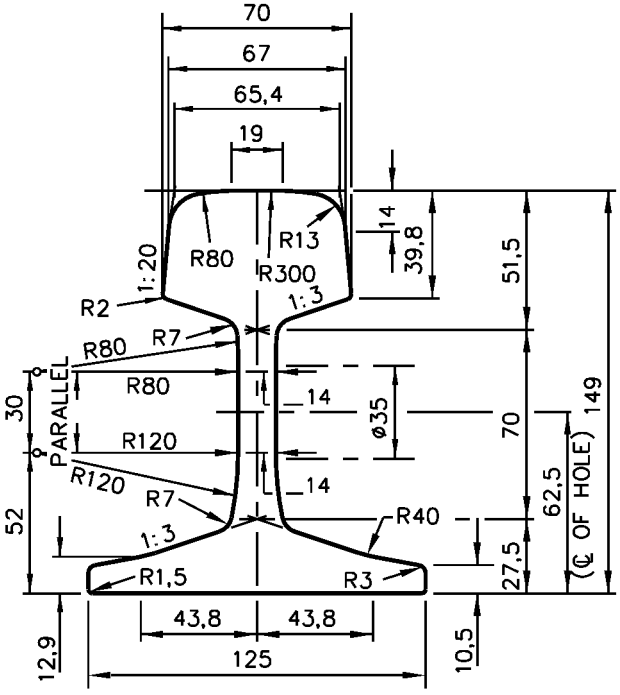

S-49

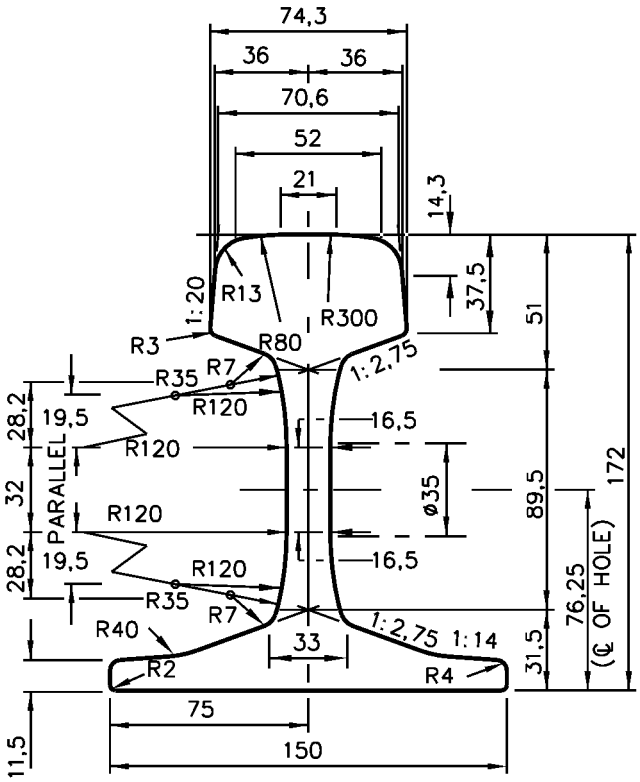

UIC-60

REMARKS :
1. FOR PROPERTIES AND ROLL MARKS SEE
ANNEXURE 14 SHEETS 4 TO 6

RAIL PROFILES

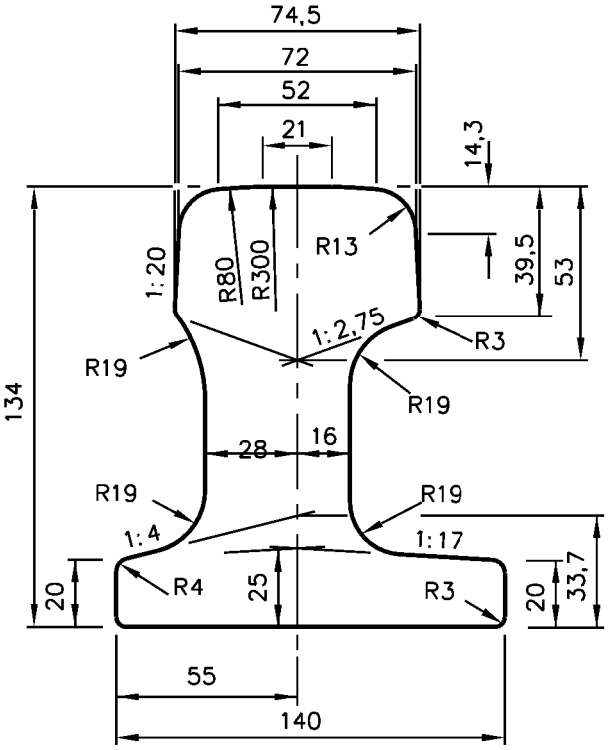

Zu–1–60

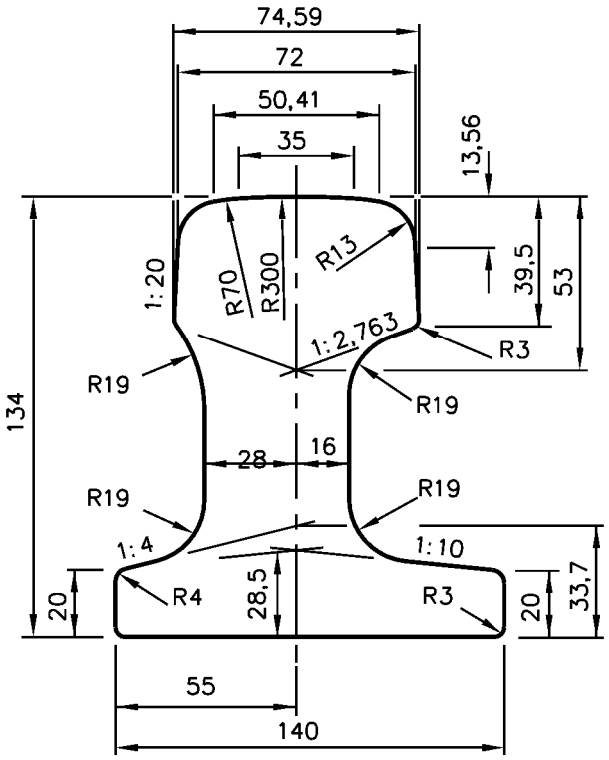

Z–S60–SAR

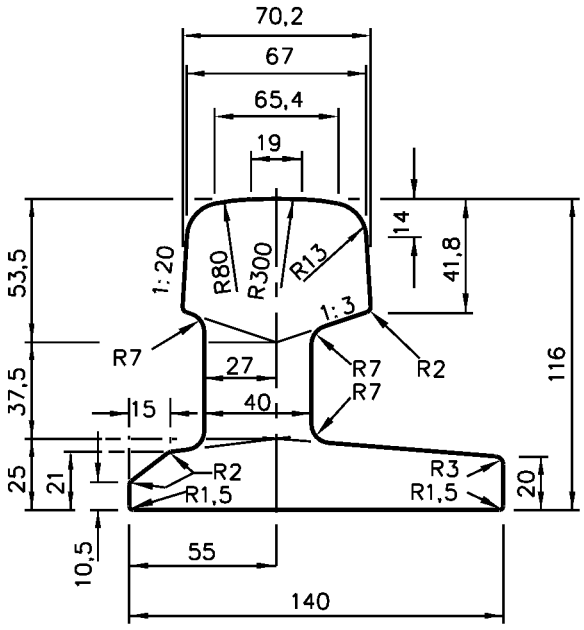

Zu–2–49

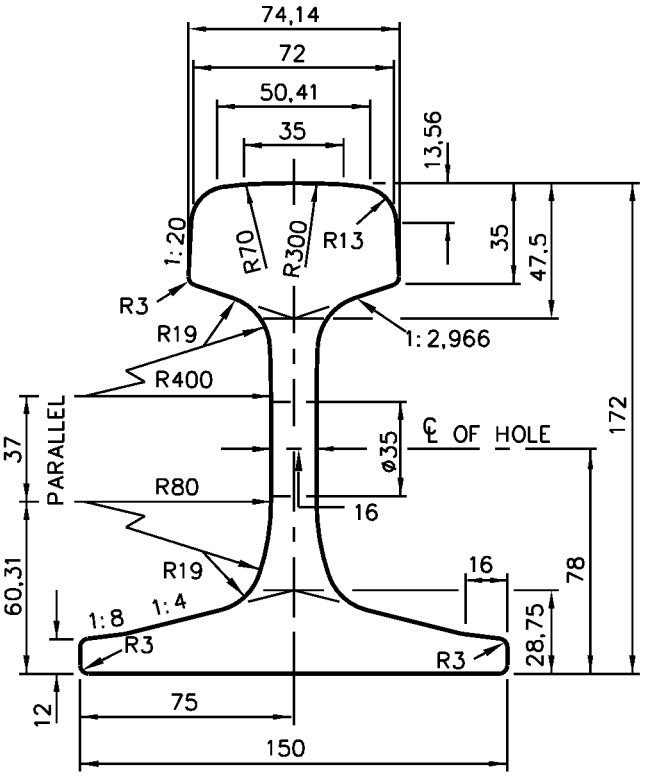

S–60–SAR

REMARKS :
1. FOR PROPERTIES AND ROLL MARKS SEE ANNEXURE 14 SHEETS 4 TO 6

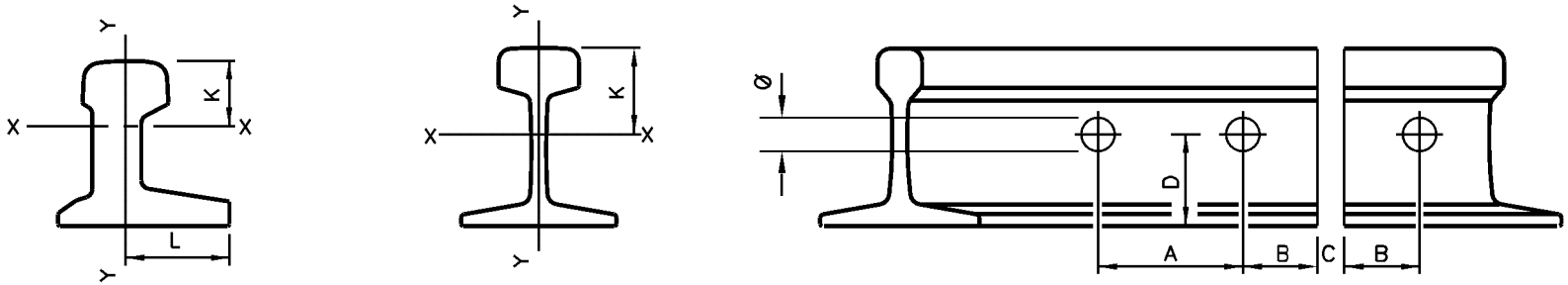

RAIL	MASS (kg/m)	HOLING						AREAS				PROPERTIES					DRAWING
		A	B	C	D	Ø	NUMBER	HEAD (%)	WEB (%)	FLANGE (%)	SECTION (cmý)	I (cm⁴) X – X	I (cm⁴) Y – Y	Z (cmÞ)	K (mm)	L (mm)	
30kg	30	100	47	6	46	26	4	45,11	18,87	36,02	38,537	626,89	158,18	110,94	56,36	–	E–192M
40kg	40	100	47	6	54	26	4	44,86	19,44	35,70	51,715	1 115,38	281,56	169,20	65,92	–	E–346
43kg	43	100	47	6	54	26	4	42,42	24,03	33,55	55,230	1 129,00	280,30	170,10	66,35	–	E–3215M
48kg	48	100	67	6	66	32	4	41,55	22,65	35,80	60,180	1 822,00	316,04	234,18	78,50	–	E–358M
51kg	51	100	67	6	66	32	4	39,00	27,80	33,20	64,850	1 844,00	320,50	234,60	78,60	–	E–358M
57kg	57	100	67	6	70	35	4	41,55	23,02	35,43	73,240	2 650,80	442,00	336,46	86,21	–	E–3232M
60kg	60	100	67	6	70	35	4	40,14	25,69	34,17	76,125	2 703,27	445,39	343,97	86,41	–	E–3232M
S–60–SAR	60,34	100	67	6	78	35	4	37,53	24,02	38,45	77,020	3 097,82	550,40	395,63 FLANGE	93,70	–	E–3326
Z–S60–SAR	72,83	–	–	–	–	–	–	34,88	30,63	34,47	92,980	1 734,40	746,94	292,98 FLANGE	74,80	82,70	
UIC–60	60,34	100	67	6	76,25	35	4	40,22	22,55	37,23	76,860	3 055,00	512,90	335,50 HEAD 377,40 FLANGE	91,05	–	700–E–736
Zu–I–60	73,00	–	–	–	–	–	–	–	–	–	93,000	1 728,00	743,50	229,90 HEAD 293,80 FLANGE	75,15	82,24	
S–49	49,43	100	67	6	62,5	35	4	47,45	17,56	34,99	62,970	1 189,00	320,00	240,00 FLANGE	75,70	–	700–E–722
Zu–2–49	62,20	–	–	–	–	–	–	–	–	–	79,260	1 075,00	700,00	162,00 HEAD	66,30	81,00	

RAIL PROPERTIES

ROLL MARKS ON RAILS

ANNEXURE 14
SHEET 5 of 6

H.C.O.B. RAILS

NOMINAL MASS				9	19 _ _	SAR
NOMINAL MASS	~~2MCC~~			9	19 _ _	SAS
NOMINAL MASS	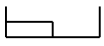		~~1~~	9	19 _ _	SAR
NOMINAL MASS	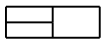			9	19 _ _	SAS
NOMINAL MASS	~~2MCC~~		~~1~~	9	19 _ _	SAR
NOMINAL MASS	~~2MCC~~		Z	9	19 _ _	SAS
NOMINAL MASS	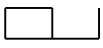		Z	9	19 _ _	SAR
NOMINAL MASS			Z	9	19 _ _	SAS

UIC A RAILS

NOMINAL MASS	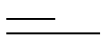			9	19 _ _	SAR
NOMINAL MASS	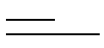		~~1~~	9	19 _ _	SAS

UIC B RAILS

NOMINAL MASS	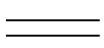			9	19 _ _	SAR

UIC C RAILS

NOMINAL MASS	2MCC			9	19 _ _	SAS
NOMINAL MASS	2MCC		~~1~~	9	19 _ _	SAR
NOMINAL MASS	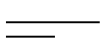			9	19 _ _	SAS

Cr–Mn RAILS

NOMINAL MASS	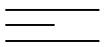			9	19 _ _	SAR
NOMINAL MASS	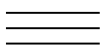	KRUPP			19 _ _	SAS

ROLL MARKS ON RAILS

HEAD HARDENED RAILS

MANUFACTURER			PROFILE	ROLL MARK	YEAR OF MANUFACTURE
DO	96	1X	UIC 60	— ____ ____	
DO			60E1	— ____ ____ —	04
DO			60E1	— ____ ____	04

REMARKS :

* HOT STAMPED ON OTHER SIDE
* MANUFACTURER'S MARK MAY NOT BE PRESENT ON HEAD HARDENED RAILS

RAIL WEAR GAUGE

ANNEXURE 15
SHEET 1 of 3

GAUGE No 2
IS USED FOR MEASURING
SIDE WEAR
14mm BELOW CROWN WEAR

GAUGE No 1
IS USED FOR MEASURING
CROWN WEAR

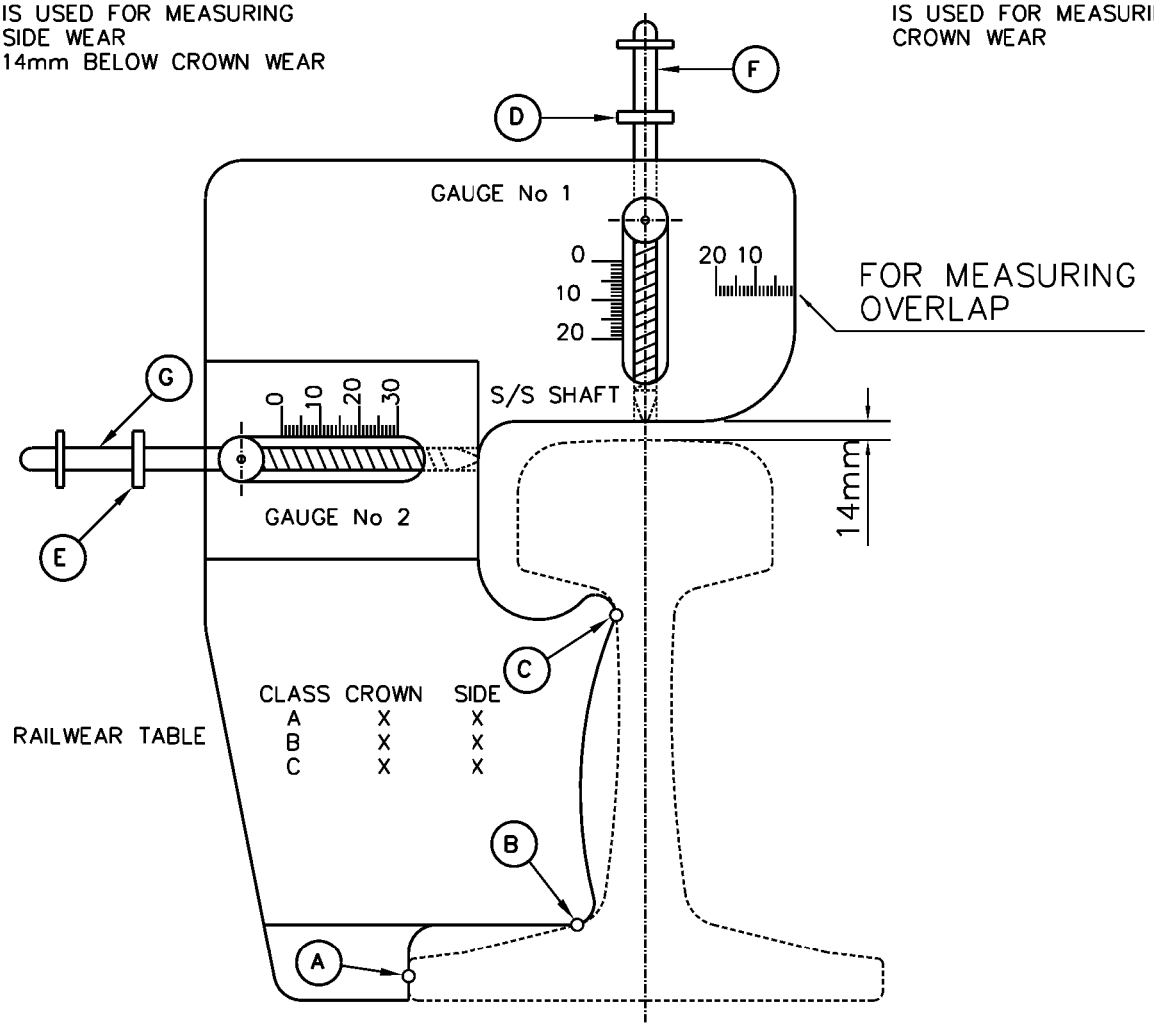

REMARKS:

1. POSITION GAUGE, ENSURING THAT POINTS **A, B & C** MAKE CONTACT WITH THE RAIL.
2. ENSURE THAT STOPPERS **D & E** ARE FIRMLY PRESSED AGAINST THE FRAME OF THE GAUGE.
3. ENSURE THAT THE GAUGE IS SQUARE TO THE RAIL, BY CAREFUL POSITIONING OF THE EXTENSION PIECE AT POINT **A**.
4. DEPRESS SPRING-LOADED SHAFTS **F & G** UNTIL CONTACT IS MADE WITH THE RAIL HEAD.
5. REMOVE THE GAUGE, DEPRESS THE SPRING LOADED SHAFTS UNTIL THE STOPPERS TOUCH THE GAUGE FRAME AND TAKE READINGS FOR TOP AND SIDE WEAR.
6. ALWAYS REMEMBER TO PRESS THE STOPPERS FIRMLY AGAINST THE FRAME BEFORE THE NEXT READINGS ARE TAKEN.
7. FOR RAIL CLASSIFICATION TABLES SEE ANNEXURE 15 SHEET 2.
8. THE CORRECT GAUGE FOR EACH RAIL PROFILE MUST BE USED.

RAIL CLASSIFICATION TABLE

ANNEXURE 15
SHEET 2 of 3

CLASS		A–WHITE		B–YELLOW		C–BLUE		D–GREY	
MINIMUM LENGTH		3m		3m		10m		2m	
KINKS (SHORT TWISTED PARTS AND PARTS WITH EXCESSIVE SIDE WEAR MAY BE CUT OFF OR OUT)		NONE		NONE		NONE		NONE	
CORRUGATIONS (MAXIMUM DEPTH) (1,5m STRAIGHT EDGE)		NONE		1mm		2mm		NO LIMIT	
LONGITUDINAL GROOVE IN CROWN (MAXIMUM DEPTH)		NONE		NONE		2mm		NO LIMIT	
CORROSION IN WEB OR FLANGE		SLIGHT		SLIGHT		ORANGE PEEL		LEMON PEEL	
SKID MARKS		NONE		1/3m AND <1mm DEEP		NO LIMIT <2mm DEEP		NO LIMIT	
BENT WEB		NONE		NONE		SLIGHT		LIGHT	
TWISTED RAIL		NONE		NONE		NONE		NONE	
CHAIR IMPRINTS (MAXIMUM DEPTH)		1mm		2mm		2mm		NO LIMIT	
OLD THERMIT AND FLASH–BUTT WELDED JOINTS (MUST BE CUT OUT)		NONE		NONE		NONE		NONE	
CONVEX OR CONCAVE FLASH–BUTT WELDED JOINTS (1,5m STRAIGHT EDGE)		NONE		NONE		UP TO 1,5mm		UP TO 3mm	
BATTERED ENDS (MUST BE CUT OFF FOR CLASSES A, B AND C)		NONE		NONE		NONE		NO LIMIT	
VISIBLE CRACKS		NONE		NONE		NONE		NONE	
		(kg/m)	(mm)	(kg/m)	(mm)	(kg/m)	(mm)	(kg/m)	(mm)
MAXIMUM CROWN WEAR	S–60	–	–	–	–	8,00	15,5	–	–
	UIC–60	–	–	–	–	8,30	16,6	–	–
	57kg	4,05	8,5	6,15	12,3	8,35	16,3	10,20	19,6
	48kg	3,25	7,4	5,05	10,7	6,80	13,8	8,55	17,0
	40kg	2,68	6,0	4,08	8,8	5,33	11,3	6,55	13,8
	30kg	2,08	4,8	3,05	7,0	4,05	9,3	5,03	11,5
MAXIMUM SIDE WEAR	S–60	–	–	–	–	6,10	26,3	–	–
	UIC–60	–	–	–	–	6,60	28,5	–	–
	57kg	0,85	5,2	3,80	16,2	7,20	27,4	7,55	28,5
	48kg	0,75	4,6	2,60	12,6	5,20	23,2	5,65	25,0
	40kg	0,73	5,0	2,00	11,0	3,80	17,1	4,70	20,0
	30kg	0,50	4,1	1,30	8,0	2,50	12,8	3,28	15,8
MAXIMUM COMBINED WEAR	S–60	–	–	–	–	12,10	–	–	–
	UIC–60	–	–	–	–	11,70	–	–	–
	57kg	–	–	–	–	12,50	–	13,40	–
	48kg	–	–	–	–	10,20	–	11,30	–
	40kg	–	–	–	–	7,40	–	8,80	–
	30kg	–	–	–	–	5,00	–	5,90	–

CUTTING OF RELEASED RAILS FOR RE-USE

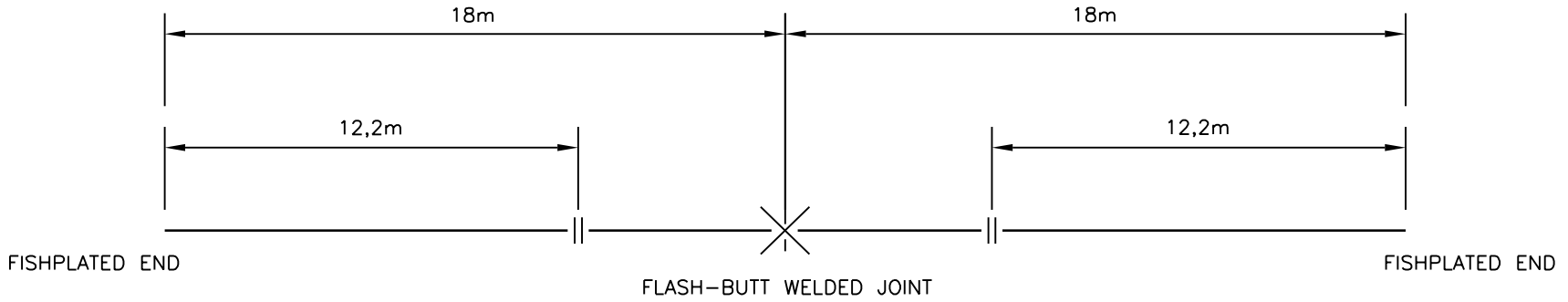

36m RAILS FROM 18m RAILS

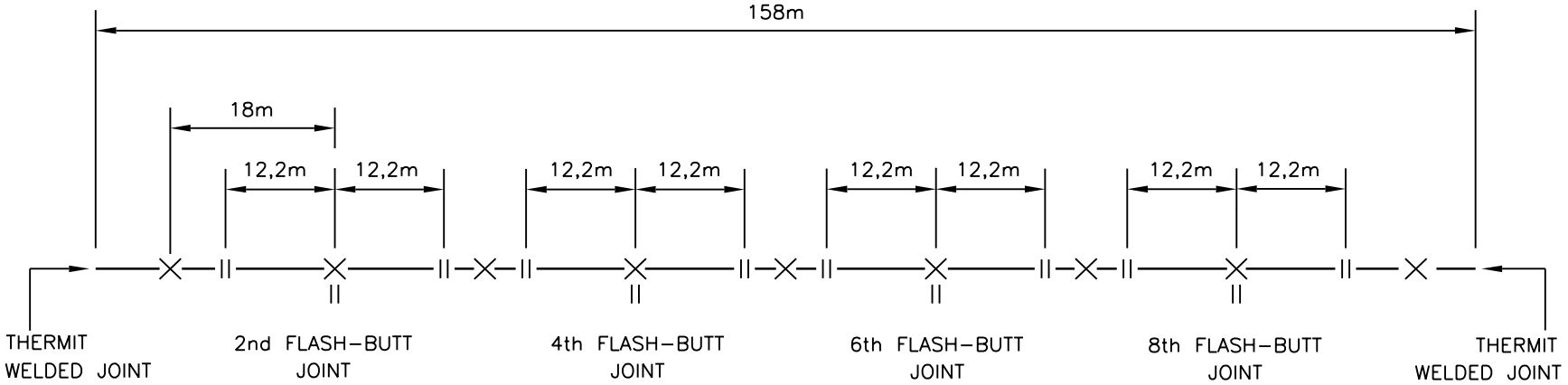

158m RAILS FROM 18m RAILS

REMARKS:

1. —X— FLASH-BUTT WELDED JOINT.
2. —X— (with ||) SITE CUTTING (THROUGH FLASH-BUTT JOINT).
3. —||— SITE CUTTING (THROUGH RAIL).
4. RE-USABLE RAILS MUST BE CUT IN THE MAXIMUM USABLE LENGTH AS POSSIBLE

ANNEXURE 15
SHEET 3 of 3

BE 97-15 Sht 3 Version 1

EXPANSION GAPS FOR DIFFERENT RAIL LENGTHS AND TEMPERATURES

RAIL LENGTH

9 AND 10m		12m		18m		36m			
						HIGH RULING TEMPERATURE		MODERATE RULING TEMPERATURE	
TEMP. (°C)	GAP (mm)	TEMP. (°C)	GAP (mm)	TEMP. (°C)	GAP (mm)	TEMP. (°C)	GAP (mm)	TEMP. (°C)	GAP (mm)
-5 TO 10	7	-5 TO 10	8	-5 TO 5	12	10 TO 20	15	5 TO 15	15
11 TO 25	5	11 TO 20	7	6 TO 20	9	21 TO 30	12	16 TO 20	12
26 TO 40	3	21 TO 30	5	21 TO 30	6	31 TO 35	9	21 TO 25	9
41 TO 50	1	31 TO 40	3	31 TO 45	3	36 TO 45	6	26 TO 35	6
51 AND HIGHER	0	41 TO 50	1	46 AND HIGHER	0	46 TO 50	3	36 TO 40	3
–	–	51 AND HIGHER	0	–	–	51 TO 60	0	41 TO 50	0

REMARKS:
1. FOR LIST OF SECTIONS OF LINE FALLING WITHIN MODERATE RULING TEMPERATURE AREAS, SEE ANNEXURE 16 SHEET 2.

SECTIONS WITH MODERATE RULING TEMPERATURES

SECTIONS WITH MODERATE RULING TEMPERATURES

MAKWASSIE – VERMAAS
VERMAAS – PUDIMOE
KLERKSDORP – OTTOSDAL
WELVERDIEND – LICHTENBURG
VERMAAS – COLIGNY

BOWKERSPARK – SPRINGFONTEIN
STERKSTROOM – MACLEAR
MOLTENO – JAMESTOWN
STORMBERG – ROSMEAD
SCHOOMBEE – HOFMEYR
DREUNBERG – ALIWAL NORTH
ALIWAL NORTH – BARKLY EAST

NOUPOORT – BLOEMFONTEIN
SPRINGFONTEIN – KOFFIEFONTEIN
HAMILTON – DE BRUG
BLOEMFONTEIN – BETHLEHEM
SANNASPOS – ALIWAL NORTH
MARSAILLES – MASERU
MODDERPOORT – LADYBRAND
BETHLEHEM – HARRISMITH
HARRISMITH – WARDEN
BETHLEHEM – GROOTVLEI
ARLINGTON – WOLWEHOEK
ARLINGTON – MARQUARD
ARLINGTON – GUNHILL
THEUNISSEN – WINBURG
VIRGINIA – GLEN HARMONY
WHITES – ODENDALSRUS
BLOEMFONTEIN – VEREENIGING
ALLANRIDGE – ANCONA
BULTFONTEIN – VIERFONTEIN
WESTLEIGH – ORKNEY
DOVER – VREDEFORT

PORT SHEPSTONE – UMKOMAAS
KELSO – UMZINTO
LIDGETTON – ESTCOURT
INGOGO – VOLKSRUST
FRANKLIN – MATATIELE
ENNERSDALE – BERGVILLE
BRAKWAL – VAN REENEN
COMMONDALE – PIET RETIEF

VOLKSRUST – UNION
VOLKSRUST – BREYTEN
BALFOUR NORTH – DROEBULT
GROOTVLEI – REDAN
KAYDALE – SPRINGS
SPRINGS – BETHAL
SPRINGS – NATALSPRUIT
GERMISTON – KWESINE
GERMISTON – ELSBURG
VEREENIGING – BANK
HOUTHEUWEL – FOCHVILLE
MIDWAY – INDIA
MIDWAY – LANGLAAGTE
NALEDI – NEW CANADA
CITY DEEP – LANGLAAGTE
CITY DEEP – WESTGATE
BOOYSENS – FARADAY
BOOYSENS – TRANSRAND
JUPITER – DRIEHOEK
DRIEHOEK – INDIA
GERMISTON – SPRINGS

GERMISTON – CHACHET
KRUGERSDORP – WOODBINE
GERMISTON – PRETORIA
LERALLA – OAKMOOR
DUNSWART – APEX
DUNSWART – WELGEDAG
SPRINGS – WITBANK
ALLIANCE – DAVEYTON
DELMAS – HAWERKLIP
OGIES – BROODSNYERSPLAAS

PRETORIA – RIVULETS
BELFAST – LYDENBURG
MACHADODORP – PIET RETIEF
SABIE – GRASKOP
POTGIETERSRUS – SOLOMONDALE
HERCULUS – MAGALIESBURG
NYLSTROOM – VAALWATER
BROODSNYERSPLAAS – ERMELO

KALBASKRAAL – SALDANHA
SALDANHA – BAMBOESBAAI

REMARKS:
1. ALL OTHER SECTIONS MUST BE REGARDED AS SECTIONS FALLING WITHIN THE HIGH RULING TEMPERATURE AREAS.

DESTRESSING AND WORKING TEMPERATURE RANGES

SECTION	DESTRESSING RANGES		WORKING RANGES FOR TRACK	
	THROUGH LINES	YARD TRACKS		
	A	D	B	C
CAPE TOWN – BELLVILLE	20 – 50	25 – 45	15 – 55	15 – 60
* BELLVILLE – WORCESTER	25 – 45	30 – 40	20 – 50	20 – 60
* WORCESTER – DE AAR	25 – 40	25 – 35	20 – 50	20 – 55
HUTCHINSON – CALVINIA	25 – 35	25 – 30	20 – 40	20 – 50
KOOTJIESKOLK – SAKRIVIER	25 – 35	25 – 30	20 – 40	20 – 50
KRAAIFONTEIN – BITTERFONTEIN	25 – 45	30 – 40	20 – 50	20 – 60
KALBASKRAAL – SALDANHA	25 – 45	30 – 40	20 – 50	20 – 60
HERMON – PORTERVILLE	25 – 45	30 – 40	20 – 50	20 – 60
WOLSELEY – PRINCE ALFRED HAMLET	25 – 45	30 – 40	20 – 50	20 – 60
PAARL – FRANCHHOEK	25 – 45	30 – 40	20 – 50	20 – 60
EERSTERIVIER – BREDASDORP	25 – 45	30 – 40	20 – 50	20 – 60
VAN DER STEL – STRAND	25 – 45	30 – 40	20 – 50	20 – 60
KLIPDALE – PROTEM	25 – 45	30 – 40	20 – 50	20 – 60
EERSTERIVIER – MULDERSVLEI	25 – 45	30 – 40	20 – 50	20 – 60
* WORCESTER – RIVERSDALE	25 – 40	30 – 35	20 – 45	20 – 55
KENTEMADE – ATLANTIS	25 – 45	30 – 40	20 – 50	20 – 60
TABLE BAY HARBOUR – SIMONSTOWN	20 – 50	25 – 45	15 – 55	15 – 60
CAPE TOWN CENTRAL METRO AREA	20 – 50	25 – 45	15 – 55	15 – 60
* DE AAR – * KIMBERLEY	25 – 40	25 – 30	20 – 45	20 – 50
* KIMBERLEY – MAKWASSIE	25 – 40	30 – 40	20 – 50	20 – 55
* MAKWASSIE – * KLERKSDORP	20 – 40	25 – 35	15 – 50	15 – 55
* KIMBERLEY – * POSTMASBURG	25 – 40	25 – 30	20 – 45	20 – 50
POSTMASBURG – HOTAZEL	25 – 40	30 – 35	20 – 45	20 – 55
DE AAR – NAKOP	25 – 40	30 – 35	25 – 45	25 – 55
GROVEPUT – COPPERTON	25 – 40	30 – 35	25 – 45	20 – 55
UPINGTON – KAKEMAS	25 – 40	30 – 35	25 – 45	20 – 55
BELMONT – DOUGLAS	25 – 40	30 – 35	20 – 45	20 – 55
VEERTIENSTROME – MAFIKENG	25 – 40	30 – 35	20 – 45	20 – 55
PUDIMOE – COLIGNE	25 – 40	30 – 35	20 – 45	20 – 55
* MAKWASSIE – VERMAAS	20 – 40	25 – 35	15 – 45	15 – 55
OTTOSDAL – * KLERKSDORP	20 – 40	25 – 35	15 – 45	15 – 55
LICHTENBURG – WELVERDIEND	20 – 40	25 – 35	15 – 45	15 – 55
PORT ELIZABETH – ALICEDALE	25 – 45	30 – 40	20 – 50	20 – 60
* ALICEDALE – NOUPOORT	25 – 40	30 – 35	20 – 45	20 – 55
NOUPOORT – DE AAR	25 – 40	30 – 35	20 – 45	20 – 55
SWARTKOPS – KLIPPLAAT	25 – 45	30 – 40	20 – 50	20 – 60
KLIPPLAAT – ROSMEAD	25 – 45	30 – 40	20 – 50	20 – 60
ADDO – KIRKWOOD	25 – 45	30 – 40	20 – 50	20 – 60
RIVERSDALE – * MOSSELBAAI	25 – 45	30 – 40	20 – 50	20 – 60
MOSSELBAAI – GEORGE	20 – 45	25 – 40	15 – 50	15 – 60
* GEORGE – OUDTSHOORN	25 – 45	30 – 40	20 – 50	20 – 60
* OUDTSHOORN – * KLIPPLAAT	25 – 40	30 – 35	20 – 45	20 – 55
OUDTSHOORN – CALITZDORP	25 – 45	30 – 40	20 – 50	20 – 60
* GEORGE – KNYSNA	25 – 45	30 – 40	20 – 50	20 – 60
* PORT ELIZABETH – AVONTUUR	25 – 40	30 – 35	20 – 45	20 – 55
GAMTOOS – PATENSIE	25 – 45	30 – 40	20 – 50	20 – 60
COOKHOUSE – SOMERSET EAST	25 – 40	30 – 35	20 – 45	20 – 55
* ALICEDALE – PORT ALFRED	30 – 40	30 – 35	25 – 45	25 – 55
BARKLEY BRIDGE – ALEXANDRIA	25 – 45	30 – 40	20 – 50	20 – 60
EAST LONDON – DOHNE	20 – 45	25 – 40	15 – 50	15 – 60
* DOHNE – QUEENSTOWN	25 – 40	30 – 35	20 – 50	20 – 55
* QUEENSTOWN – BURGERSDORP	20 – 35	25 – 30	15 – 45	15 – 50
* BURGERSDORP – SPRINGFONTEIN	20 – 40	25 – 40	15 – 50	15 – 55
COOKHOUSE – BLANEY	25 – 40	30 – 35	20 – 45	20 – 55
AMABELE – UMTATA	25 – 40	30 – 35	20 – 45	20 – 55
IMVANI – QAMATA	25 – 40	30 – 35	20 – 45	20 – 55
* ROSMEAD – STORMBERG	20 – 30	20 – 25	15 – 35	15 – 45
SCHOOMBEE – HOFMEYR	20 – 30	20 – 25	15 – 35	15 – 45
STERKSTROOM – MACLAER	20 – 30	20 – 25	15 – 35	15 – 45
MOLTENO – JAMESTOWN	20 – 30	20 – 25	15 – 35	15 – 45
BURGERSDORP – BARKLEY EAST	20 – 35	25 – 30	15 – 40	15 – 50

REMARKS:

1. FOR REMARKS SEE ANNEXURE 16 SHEET 5.

DESTRESSING AND WORKING TEMPERATURE RANGES

SECTION	DESTRESSING RANGES		WORKING RANGES FOR TRACK	
	THROUGH LINES	YARD TRACKS		
	A	D	B	C
NOUPOORT – SPRINGFONTEIN	20 – 40	25 – 35	15 – 45	15 – 55
* SPRINGFONTEIN – BLOEMFONTEIN	20 – 35	25 – 30	15 – 40	15 – 50
BLOEMFONTEIN – THEUNISSEN	20 – 35	25 – 30	15 – 40	15 – 50
* THEUNISSEN – KROONSTAD	20 – 40	25 – 35	15 – 45	15 – 55
KROONSTAD – VEREENIGING	20 – 40	25 – 35	15 – 45	15 – 55
BETHLEHEM – ARLINGTON	15 – 35	20 – 30	10 – 40	10 – 50
* ARLINGTON – * KROONSTAD	15 – 40	20 – 35	10 – 45	10 – 55
KIMBERLEY – EMMAUS	25 – 40	25 – 35	20 – 45	20 – 55
* EMMAUS – BLOEMFONTEIN	20 – 35	25 – 30	15 – 40	15 – 50
SPRINGFONTEIN – KOFFIEFONTEIN	25 – 40	30 – 35	20 – 45	20 – 55
ALIWAL NORTH – SANNASPOS	20 – 40	25 – 35	15 – 45	15 – 55
GROOTVLEI – * BETHLEHEM	20 – 35	25 – 30	15 – 40	15 – 50
* BETHLEHEM – BLOEMFONTEIN	20 – 35	25 – 30	15 – 40	15 – 50
HARRISMITH – BETHLEHEM	15 – 35	20 – 30	10 – 40	10 – 50
VREDEFORT – DOVER	20 – 40	25 – 35	15 – 45	15 – 55
WOLWEHOEK – ARLINGTON	20 – 40	25 – 35	15 – 45	15 – 55
* ARLINGTON – MARQUARD	20 – 40	25 – 35	15 – 45	15 – 55
ORKNEY – WESLEIGH	20 – 40	25 – 35	15 – 45	15 – 55
VIERFONTEIN – BULTFONTEIN	20 – 40	25 – 35	15 – 45	15 – 55
ANCONA – WHITES	20 – 40	25 – 35	15 – 45	15 – 55
THEUNISSEN – WINBURG	20 – 40	25 – 35	15 – 45	15 – 55
WARDEN – * HARRISMITH	20 – 40	25 – 35	15 – 45	15 – 55
MASERU – MARSAILLES	20 – 40	25 – 35	15 – 45	15 – 55
LADYBRAND – MODDERPOORT	20 – 40	25 – 35	15 – 45	15 – 55
VIRGINIA – GLEN HARMONY	20 – 40	25 – 35	15 – 45	15 – 55
WONDERFONTEIN – BROODSNYERSPLAAS	15 – 40	20 – 35	10 – 45	10 – 55
ERMELO – MACHADODORP	20 – 40	25 – 35	15 – 45	15 – 55
BUHRMANNSKOP – LOTHAIR	15 – 35	20 – 30	10 – 40	10 – 50
ROSSBURG – * DASSENHOEK	20 – 45	25 – 40	15 – 50	15 – 60
DASSENHOEK – CATO RIDGE	25 – 40	30 – 35	20 – 45	20 – 55
CATO RIDGE – PIETERMARITZBURG	25 – 40	30 – 35	20 – 45	20 – 55
* PIETERMARITZBURG – * VOLKSRUST	20 – 40	25 – 35	15 – 45	15 – 55
ROSSBURG – HILLCREST	20 – 45	25 – 40	15 – 50	15 – 60
* HILLCREST – CATO RIDGE	25 – 40	30 – 35	20 – 45	20 – 55
DURBAN – PORT SHEPSTONE	20 – 50	25 – 45	15 – 60	15 – 65
KELSO – UMZINTO	20 – 50	25 – 45	15 – 60	15 – 65
DURBAN – HLUHLUWE	20 – 50	25 – 45	15 – 60	15 – 65
* HLUHLUWE – GOLELA	25 – 45	30 – 40	20 – 55	20 – 60
EMPANGENI – NKWALINI	25 – 50	30 – 45	20 – 55	20 – 60
DUFFSROAD – KWAMASHU	25 – 50	30 – 45	20 – 55	20 – 60
THORNVILLE – RICHMOND	25 – 40	30 – 35	20 – 45	20 – 55
THORNVILLE – PENTRICH	25 – 40	30 – 35	20 – 45	20 – 55
* PIETERMARITZBURG – KOKSTAD	25 – 35	25 – 30	20 – 40	20 – 50
DONNYBROOK – UNDERBERG	20 – 35	25 – 30	15 – 40	15 – 50
FRANKLIN – MATATIELE	20 – 35	25 – 30	15 – 40	15 – 50
PIETERMARITZBURG – DALTON	25 – 40	30 – 35	20 – 45	20 – 55
* DALTON – KRANSKOP	20 – 40	25 – 35	15 – 45	15 – 55
SCHROEDERS – BRUYNSHILL	25 – 40	30 – 35	20 – 45	20 – 55
* DALTON – GLENSIDE	20 – 40	25 – 35	15 – 45	15 – 55
GREYTOWN – MOUNT ALIDA	20 – 40	25 – 35	15 – 45	15 – 55
ENNERSDALE – BERGVILLE	25 – 40	30 – 35	20 – 45	20 – 55
GLENCOE – VRYHEID	20 – 40	20 – 35	15 – 50	15 – 55
NEWCASTLE – UTRECHT	20 – 40	25 – 35	15 – 45	15 – 55
LADYSMITH – HARRISMITH	20 – 40	25 – 35	15 – 45	15 – 55

REMARKS:

1. FOR REMARKS SEE ANNEXURE 16 SHEET 5.

DESTRESSING AND WORKING TEMPERATURE RANGES

SECTION	DESTRESSING RANGES		WORKING RANGES FOR TRACK	
	THROUGH LINES	YARD TRACKS		
	A	D	B	C
KLERKSDORP – * POTCHEFSTROOM	20 – 35	25 – 30	20 – 40	15 – 50
POTCHEFSTROOM – * KRUGERSDORP	20 – 40	25 – 35	15 – 45	15 – 55
KRUGERSDORP – JOHANNESBURG	15 – 40	20 – 35	10 – 45	10 – 55
JOHANNESBURG – OLIFANTSFONTEIN	15 – 40	20 – 35	10 – 45	10 – 55
POTCHEFSTROOM – VEREENIGING	20 – 40	25 – 35	15 – 45	15 – 55
VEREENIGING – GERMISTON	20 – 40	25 – 35	15 – 45	15 – 55
VOLKSRUST – * STANDERTON	15 – 35	20 – 30	10 – 40	10 – 50
STANDERTON – * HEIDELBERG	20 – 35	25 – 30	15 – 40	15 – 50
HEIDELBERG – GERMISTON	20 – 40	25 – 35	15 – 45	15 – 55
BALFOUR NORTH – * GROOTVLEI	20 – 35	25 – 30	15 – 40	15 – 50
GROOTVLEI – REDAN	20 – 40	25 – 35	15 – 45	15 – 55
FIRHAM – VREDE	20 – 35	25 – 30	15 – 40	15 – 50
VOLKSRUST – BREYTEN	15 – 40	20 – 35	10 – 45	10 – 55
BETHAL – SPRINGS	20 – 40	25 – 35	15 – 45	15 – 55
SPRINGS – KAYDALE	20 – 40	25 – 35	15 – 45	15 – 55
MIDWAY – HOUTHEUWEL	20 – 35	25 – 30	15 – 40	15 – 50
BANK – LANGLAAGTE	20 – 35	25 – 30	15 – 40	15 – 50
MAFIKENG – * KRUGERSDORP	25 – 40	30 – 35	20 – 45	20 – 55
APEX – WITBANK	20 – 35	25 – 30	15 – 40	15 – 50
DELMAS – HAWEKLIP	20 – 35	25 – 30	15 – 40	15 – 50
SENTRARAND AREA	15 – 35	20 – 30	10 – 40	10 – 50
JOHANNESBURG CENTRAL METRO AREA	15 – 40	20 – 35	10 – 45	10 – 55
OLIFANTSFONTEIN – * IRENE	15 – 40	20 – 35	10 – 45	10 – 55
IRENE – PRETORIA	20 – 40	25 – 35	15 – 45	15 – 55
PRETORIA – * WARMBATHS	20 – 40	25 – 35	15 – 45	15 – 55
WARMBATHS – * POTGIETERSRUS	20 – 45	25 – 40	15 – 55	15 – 60
POTGIETERSRUS – BEITBRIDGE	20 – 45	25 – 40	15 – 50	15 – 50
* PRETORIA – * WATERVAL BOVEN	20 – 40	25 – 35	15 – 50	15 – 55
WATERVAL BOVEN – * NELSPRUIT	20 – 45	25 – 40	15 – 55	15 – 60
NELSPRUIT – KOMATIPOORT	25 – 45	30 – 40	20 – 55	20 – 60
HERCULES – MAGALIESBURG	20 – 40	25 – 35	15 – 45	15 – 55
PRETORIA – BRITS	20 – 40	20 – 35	15 – 45	15 – 55
BRITS – RUSTENBURG	20 – 40	25 – 35	15 – 45	15 – 55
RUSTENBURG – * THABAZIMBI	20 – 40	25 – 35	15 – 45	15 – 55
THABAZIMBI – ELLISRAS	25 – 40	30 – 35	20 – 45	20 – 55
BRITS – ATLANTA	20 – 40	25 – 35	15 – 45	15 – 55
NYLSTROOM – VAALWATER	20 – 40	25 – 35	15 – 45	15 – 55
NABOOMSPRUIT – ZEBEDIELA	20 – 40	25 – 35	15 – 45	15 – 55
PIENAARSRIVIER – MARBLE HALL	25 – 40	30 – 35	20 – 45	20 – 55
RAYTON – CULLINAN	20 – 40	25 – 35	15 – 45	15 – 55
GROENBULT – KAAPMUIDEN	25 – 45	30 – 40	20 – 50	20 – 60
HOEDSPRUIT – PHALABORWA	25 – 45	30 – 40	20 – 50	20 – 60
* KAAPMUIDEN – BARBERTON	20 – 45	25 – 40	15 – 50	15 – 60
* NELSPRUIT – GRASKOP	20 – 35	25 – 30	15 – 40	15 – 50
CITRUS – PLASTON	20 – 45	25 – 40	15 – 50	15 – 60
BELFAST – STEELPOORT	20 – 40	25 – 35	15 – 45	15 – 55
DERWENT – ROOSSENEKAL	20 – 40	25 – 35	15 – 45	15 – 55
PRETORIA CENTRAL METRO AREA	20 – 40	25 – 35	15 – 45	15 – 55
SALDANHA – BAMBOESBAAI	20 – 50	25 – 45	15 – 55	15 – 60
* BAMBOESBAAI – SISHEN	25 – 40	30 – 35	20 – 45	20 – 55
RICHARDSBAY – ULUNDI	20 – 45	–	20 – 55	–
* ULUNDI – PIET RETIEF	20 – 40	25 – 35	20 – 50	15 – 55
PIET RETIEF – * SHEEPMORE	20 – 40	25 – 35	20 – 50	15 – 55
SHEEPMORE – ERMELO	15 – 35	20 – 30	15 – 45	10 – 50
* ERMELO – BROODSNYERSPLAAS	15 – 40	20 – 35	15 – 50	10 – 55
BROODSNYERSPLAAS – OGIES	15 – 40	20 – 35	15 – 50	10 – 55

REMARKS:

1. RAIL TEMPERATURES IN DEGREE CELSIUS.
2. USE A RAIL TENSOR WHEN THE DIFFERENCE IN THE 'A' RANGE IS 10° CELSIUS OR SMALLER.
3. * DENOTES "EXCLUDED".

DESTRESSING AND WORKING TEMPERATURE RANGES

SECTION	DESTRESSING RANGES		WORKING RANGES FOR TRACK	
	THROUGH LINES	YARD TRACKS		
	A	D	B	C
KLERKSDORP – * POTCHEFSTROOM	20 – 35	25 – 30	20 – 40	15 – 50
POTCHEFSTROOM – * KRUGERSDORP	20 – 40	25 – 35	15 – 45	15 – 55
KRUGERSDORP – JOHANNESBURG	15 – 40	20 – 35	10 – 45	10 – 55
JOHANNESBURG – OLIFANTSFONTEIN	15 – 40	20 – 35	10 – 45	10 – 55
POTCHEFSTROOM – VEREENIGING	20 – 40	25 – 35	15 – 45	15 – 55
VEREENIGING – GERMISTON	20 – 40	25 – 35	15 – 45	15 – 55
VOLKSRUST – * STANDERTON	15 – 35	20 – 30	10 – 40	10 – 50
STANDERTON – * HEIDELBERG	20 – 35	25 – 30	15 – 40	15 – 50
HEIDELBERG – GERMISTON	20 – 40	25 – 35	15 – 45	15 – 55
BALFOUR NORTH – * GROOTVLEI	20 – 35	25 – 30	15 – 40	15 – 50
GROOTVLEI – REDAN	20 – 40	25 – 35	15 – 45	15 – 55
FIRHAM – VREDE	20 – 35	25 – 30	15 – 40	15 – 50
VOLKSRUST – BREYTEN	15 – 40	20 – 35	10 – 45	10 – 55
BETHAL – SPRINGS	20 – 40	25 – 35	15 – 45	15 – 55
SPRINGS – KAYDALE	20 – 40	25 – 35	15 – 45	15 – 55
MIDWAY – HOUTHEUWEL	20 – 35	25 – 30	15 – 40	15 – 50
BANK – LANGLAAGTE	20 – 35	25 – 30	15 – 40	15 – 50
MAFIKENG – * KRUGERSDORP	25 – 40	30 – 35	20 – 45	20 – 55
APEX – WITBANK	20 – 35	25 – 30	15 – 40	15 – 50
DELMAS – HAWEKLIP	20 – 35	25 – 30	15 – 40	15 – 50
SENTRARAND AREA	15 – 35	20 – 30	10 – 40	10 – 50
JOHANNESBURG CENTRAL METRO AREA	15 – 40	20 – 35	10 – 45	10 – 55
OLIFANTSFONTEIN – * IRENE	15 – 40	20 – 35	10 – 45	10 – 55
IRENE – PRETORIA	20 – 40	25 – 35	15 – 45	15 – 55
PRETORIA – * WARMBATHS	20 – 40	25 – 35	15 – 45	15 – 55
WARMBATHS – * POTGIETERSRUS	20 – 45	25 – 40	15 – 55	15 – 60
POTGIETERSRUS – BEITBRIDGE	20 – 45	25 – 40	15 – 50	15 – 50
* PRETORIA – * WATERVAL BOVEN	20 – 40	25 – 35	15 – 50	15 – 55
WATERVAL BOVEN – * NELSPRUIT	20 – 45	25 – 40	15 – 55	15 – 60
NELSPRUIT – KOMATIPOORT	25 – 45	30 – 40	20 – 55	20 – 60
HERCULES – MAGALIESBURG	20 – 40	25 – 35	15 – 45	15 – 55
PRETORIA – BRITS	20 – 40	20 – 35	15 – 45	15 – 55
BRITS – RUSTENBURG	20 – 40	25 – 35	15 – 45	15 – 55
RUSTENBURG – * THABAZIMBI	20 – 40	25 – 35	15 – 45	15 – 55
THABAZIMBI – ELLISRAS	25 – 40	30 – 35	20 – 45	20 – 55
BRITS – ATLANTA	20 – 40	25 – 35	15 – 45	15 – 55
NYLSTROOM – VAALWATER	20 – 40	25 – 35	15 – 45	15 – 55
NABOOMSPRUIT – ZEBEDIELA	20 – 40	25 – 35	15 – 45	15 – 55
PIENAARSRIVIER – MARBLE HALL	25 – 40	30 – 35	20 – 45	20 – 55
RAYTON – CULLINAN	20 – 40	25 – 35	15 – 45	15 – 55
GROENBULT – KAAPMUIDEN	25 – 45	30 – 40	20 – 50	20 – 60
HOEDSPRUIT – PHALABORWA	25 – 45	30 – 40	20 – 50	20 – 60
* KAAPMUIDEN – BARBERTON	20 – 45	25 – 40	15 – 50	15 – 60
* NELSPRUIT – GRASKOP	20 – 35	25 – 30	15 – 40	15 – 50
CITRUS – PLASTON	20 – 45	25 – 40	15 – 50	15 – 60
BELFAST – STEELPOORT	20 – 40	25 – 35	15 – 45	15 – 55
DERWENT – ROOSSENEKAL	20 – 40	25 – 35	15 – 45	15 – 55
PRETORIA CENTRAL METRO AREA	20 – 40	25 – 35	15 – 45	15 – 55
SALDANHA – BAMBOESBAAI	20 – 50	25 – 45	15 – 55	15 – 60
* BAMBOESBAAI – SISHEN	25 – 40	30 – 35	20 – 45	20 – 55
RICHARDSBAY – ULUNDI	20 – 45	–	20 – 55	–
* ULUNDI – PIET RETIEF	20 – 40	25 – 35	20 – 50	15 – 55
PIET RETIEF – * SHEEPMORE	20 – 40	25 – 35	20 – 50	15 – 55
SHEEPMORE – ERMELO	15 – 35	20 – 30	15 – 45	10 – 50
* ERMELO – BROODSNYERSPLAAS	15 – 40	20 – 35	15 – 50	10 – 55
BROODSNYERSPLAAS – OGIES	15 – 40	20 – 35	15 – 50	10 – 55

REMARKS:

1. RAIL TEMPERATURES IN DEGREE CELSIUS.
2. USE A RAIL TENSOR WHEN THE DIFFERENCE IN THE 'A' RANGE IS 10° CELSIUS OR SMALLER.
3. * DENOTES "EXCLUDED".

TYPICAL RAIL DEFECTS AND FRACTURES

ANNEXURE 17
SHEET 1 of 7

A1	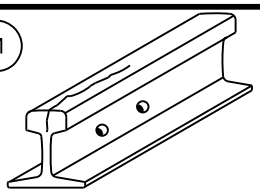	VERTICAL CRACK THROUGH CROWN AT END.	
A2	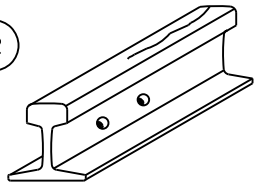	CRACK THROUGH CROWN OF RAIL IN RUNNING SURFACE.	
A3	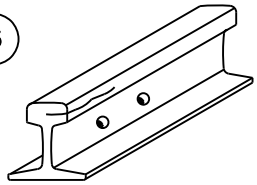	HORIZONTAL CRACK IN HEAD OF RAIL AT END.	
A4	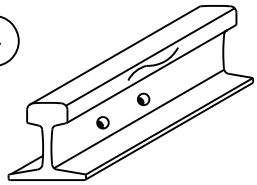	HORIZONTAL CRACK IN SIDE OF HEAD OF RAIL.	
B1	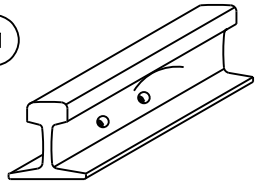	CRACK ALONG RAIL AT JUNCTION OF HEAD AND WEB.	
B2	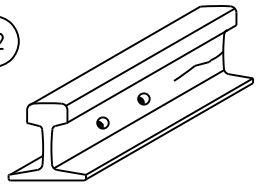	HORIZONTAL CRACK IN BODY OF WEB.	
B3	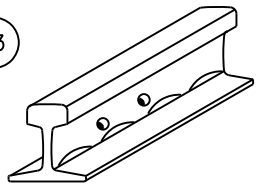	CRACKS AT JUNCTION OF WEB AND FLANGE (OVER SLEEPERS).	
B4	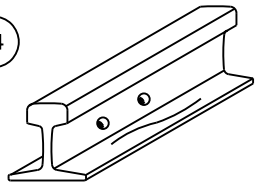	CRACK ALONG FLANGE OF RAIL.	
C1	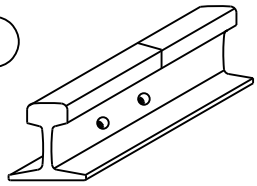	TRANSVERSE CRACK ACROSS HEAD.	
C2	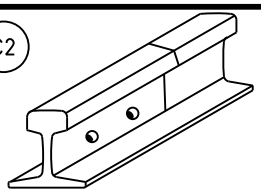	TRANSVERSE CRACK ACROSS HEAD ORIGINATING FROM TRACK BOND.	
C3	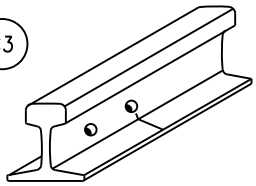	TRANSVERSE CRACK ACROSS FLANGE ORIGINATING FROM TRACK BOND.	
C4	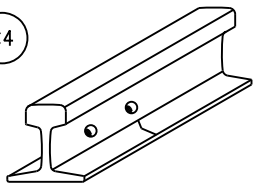	TRANSVERSE CRACK ACROSS FLANGE.	
C5	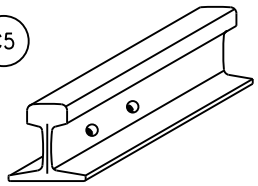	VERTICAL CRACK IN SECTION OF RAIL AT END.	
D1	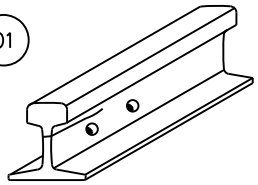	CRACK IN WEB OF RAIL AT END.	
D2	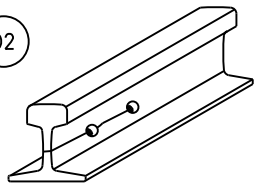	CRACK IN WEB ALONG FISH-BOLT HOLES.	
E1	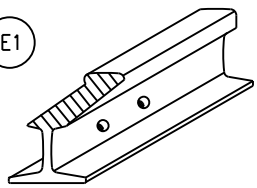	PIECE OF CROWN BROKEN AWAY AT END.	
E2	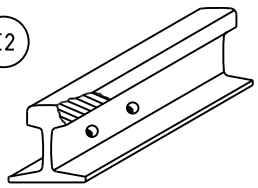	PIECE BROKEN AWAY FROM SIDE OF HEAD AT END.	
E3	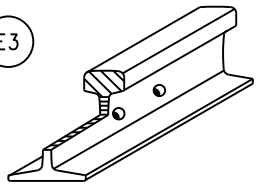	HEAD OF RAIL BROKEN AWAY AT END.	

TYPICAL RAIL DEFECTS AND FRACTURES

ANNEXURE 17
SHEET 2 of 7

E4	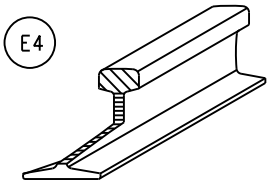	PORTION OF HEAD AND WEB OF RAIL BROKEN AWAY AT END.	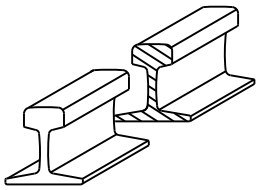 H1 BREAK THROUGH FLASH-BUTT WELD. H4 BREAK THROUGH ARC-BUTT WELD.
E5	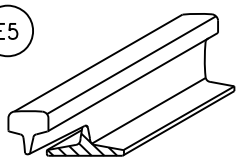	PORTION OF WEB AND FLANGE OF RAIL BROKEN AWAY AT END.	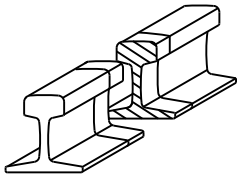 H2 BREAK THROUGH THERMIT WELD. H6 BREAK THROUGH THERMIT WELD AT JUNCTION RAIL.
F1	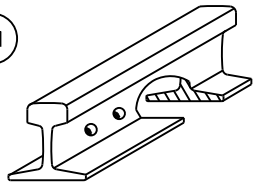	PORTION OF WEB AND FLANGE OF RAIL BROKEN OUT.	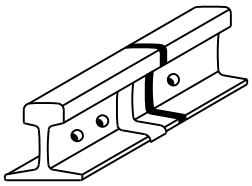 H3 BREAK THROUGH RAIL ADJACENT TO THERMIT WELD. H7 BREAK THROUGH RAIL ADJACENT TO THERMIT WELD. AT JUNCTION RAIL.
F2	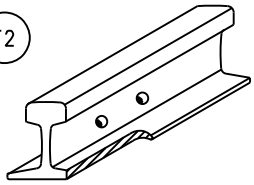	PORTION OF FLANGE BROKEN AWAY AT END.	H5 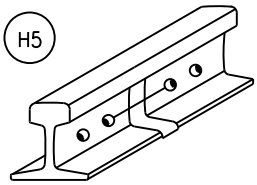 CRACK ACROSS EXTHERMIT WELD.
F3	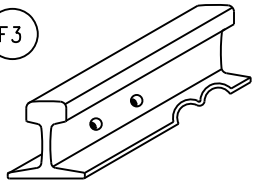	PIECE OF FLANGE BROKEN OUT.	J1 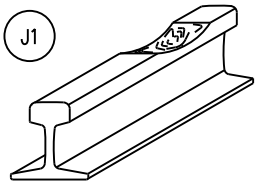 RAIL DAMAGED BY SPINNING WHEELS.
G1	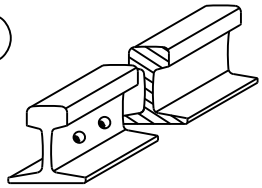	BREAK THROUGH SECTION OF RAIL.	J2 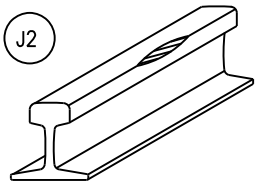 PIECE BROKEN OUT FROM SIDE OF CROWN.
G2	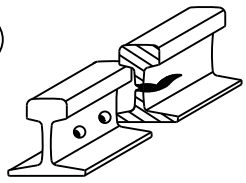	BREAK THROUGH SECTION OF RAIL AND LONGITUDINAL CRACK IN WEB.	J3 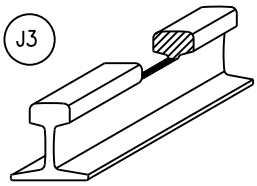 PORTION BROKEN OUT OF CROWN OF RAIL.
G3	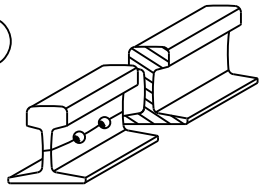	BREAK THROUGH HEAD AND FLANGE OF RAIL WITH CRACKS EXTENDING INTO THE FISH-BOLT HOLES.	K1 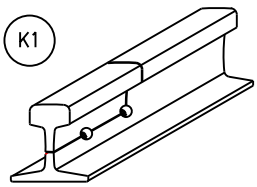 PIECE OF HEAD AND WEB BROKEN AWAY THROUGH FISH-BOLT HOLES.
G4	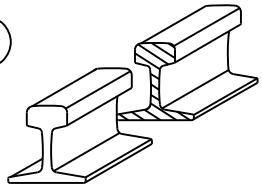	BREAK THROUGH SECTION OF RAIL, ANNEXURE 17 SHEET 3.	K2 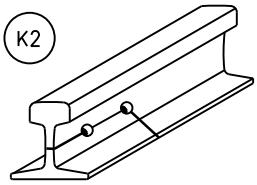 PIECE OF WEB AND FLANGE BROKEN AWAY THROUGH FISH-BOLT HOLES.

TRANSVERSE FISSURES (G4)

EARLY STAGE

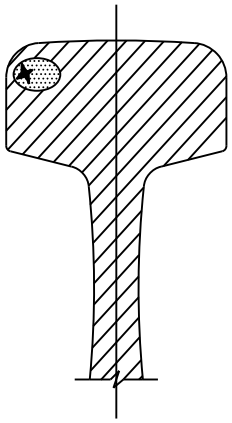

NUCLEUS
OFF-CENTRE

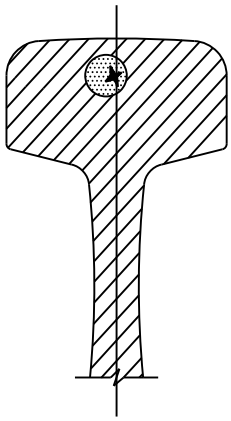

NUCLEUS CENTRAL

LATE STAGE

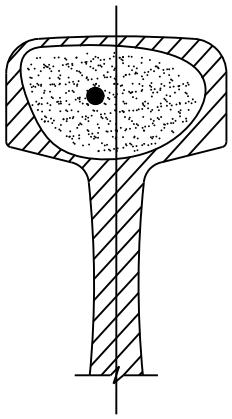

NUCLEUS OFF-
CENTRE WITHOUT RINGS

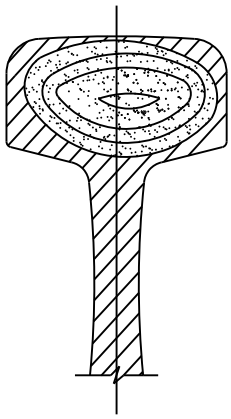

NUCLEUS CENTRAL
WITH RINGS

REMARKS:

1. THE TRANSVERSE FISSURE FLAW IS A PROGRESSIVE CROSSWISE FRACTURE STARTING FROM A NUCLEUS INSIDE THE HEAD OF THE RAIL AND SPREADING OUTWARDS UNTIL FRACTURE OF THE RAIL RESULTS. THE FLAW SPREADS MORE QUICKLY AS IT BECOMES LARGER.
2. THE SKETCHES ABOVE INDICATE VARIOUS STAGES OF THE DEVELOPMENT OF TRANSVERSE FISSURES. (USE IN THIS SEQUENCE).
3. THE SKETCHES ABOVE INDICATE VARIOUS STAGES OF THE DEVELOPMENT OF TRANSVERSE FISSURES (THE SKETCHES ARE NOT SPECIFIC IN SEQUENCE AS SHOWN ON THE DRAWING.
4. ULTRASONIC TESTING PROVIDES THE MOST SUCCESSFUL METHOD OF ESTABLISHING THE PRESENCE OF SUCH FISSURES.
5. WHEN CRACKS ACROSS THE CROWN OF A RAIL ARE DISCOVERED, THE RAIL, AFTER REMOVAL FROM THE TRACK, MUST BE BROKEN TO ESTABLISH WHETHER A TRANSVERSE FISSURE FLAW IS THE CAUSE, AND TO WHAT EXTEND IT CORRELATES WITH ULTRASONIC TESTS.

RAIL DEFECTS AND FRACTURES : SAFETY PRECAUTIONS TO BE OBSERVED

NO RESTRICTIONS (EXCLUDING HEAVY HAUL LINES)

DEFECTS AS ILLUSTRATED, BUT NOT LONGER THAN 150mm

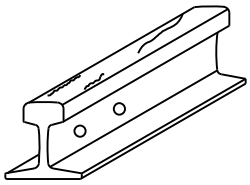
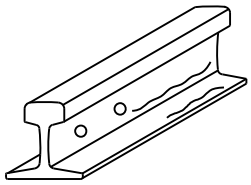
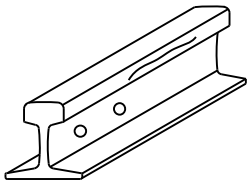

LESS THAN
2mm DEEP

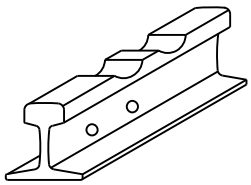
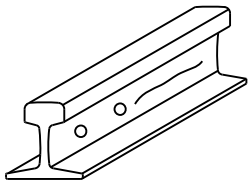
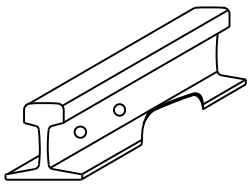

MAXIMUM SPEED 15km/h (EXCLUDING HEAVY HAUL LINES)

DEFECTS AS ILLUSTRATED ABOVE, BUT LONGER THAN 150mm, PLUS THOSE ILLUSTRATED HERE.

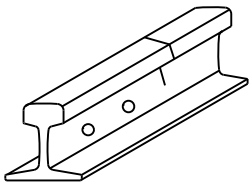
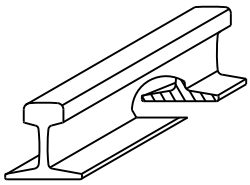
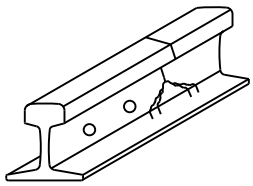
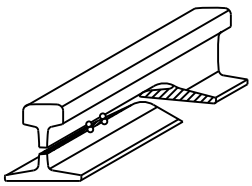
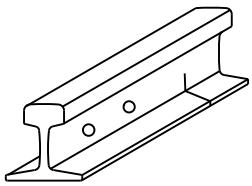

STOP **WAIT FOR PERMANENT WAY STAFF**

DEFECTS AS ILLUSTRATED AND ALL OTHERS NOT SHOWN.

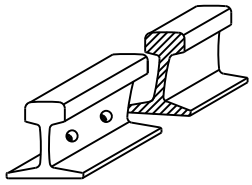
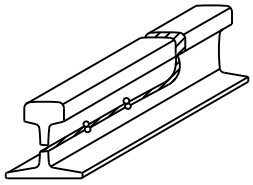
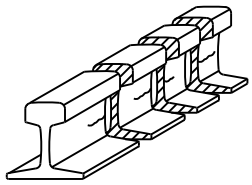
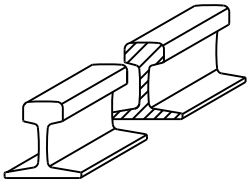
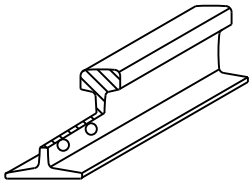
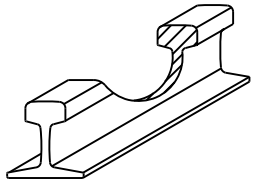

RAILS WITH ULTRASONIC - DETECTED DEFECTS

ANNEXURE 17
SHEET 5 of 7

TYPE OF DEFECT	ULTRASONIC MARK	INDICATION OF ULTRASONIC DEFECT	ACTION
TRANSVERSE FISSURE IN RAIL	VERTICAL YELLOW STRIPES PAINTED ON RAIL WEB. 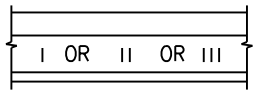 I = DEFECT < 15mm II = 15 ≤ DEFECT < 25mm III = DEFECT ≥ 25mm	S - LINES 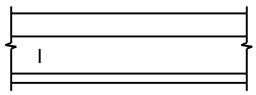	CUT OUT DEFECT IMMEDIATELY AND REPLACE WITH CLOSURE RAIL.
		N1, N2 AND N3 LINES 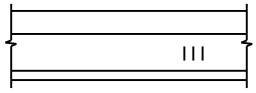	CUT OUT DEFECT IMMEDIATELY AND REPLACE WITH CLOSURE RAIL.
		DEFECT <2m FROM WELDED JOINT. 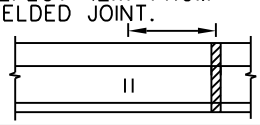	CUT OUT DEFECT AND REPLACE WITH CLOSURE RAIL.
		DEFECT >2m FROM WELDED JOINT. 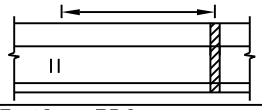	STRENGTHEN TEMPORARILY WITH FISHPLATES AND FISHBOLTS OR JOGGLED FISHPLATES.
		DEFECT <2m FROM WELDED JOINT. 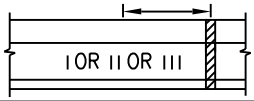	CUT OUT DEFECT AND DEFECTIVE WELDED JOINT AND REPLACE WITH CLOSURE RAIL.
		>1 DEFECTS BETWEEN FISHPLATED OR WELDED JOINT. 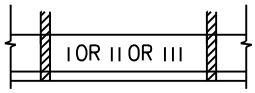	CUT OUT AND REPLACE TOTAL LENGTH BETWEEN JOINTS.
PIPING IN RAIL	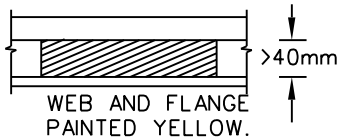 WEB AND FLANGE PAINTED YELLOW.		CUT TOTAL PIPE LENGTH OUT AND REPLACE WITH CLOSURE RAIL.
DEFECT AT FISHPLATED JOINT	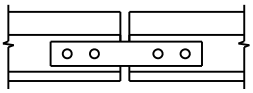 BOTH FISHPLATES PAINTED YELLOW.		REMOVE FISHPLATES AND IF CRACKS ARE VISIBLE, REPLACE THE WHOLE CRACKED RAIL OR PART OF IT WITH CLOSURE RAIL.
DEFECT AT WELDED JOINT	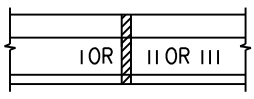 WEB OF RAIL PAINTED AT THE WELDED JOINT WITH VERTICAL YELLOW STRIPES. (EXCLUDING HEAVY HAUL LINES. SEE CHAPTER 20).	CRACK NOT VISIBLE. 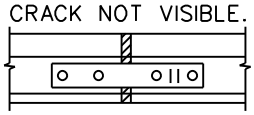	STRENGTHEN WITH YELLOW PAINTED JOGGLED FISHPLATES.
		CRACK VISIBLE. 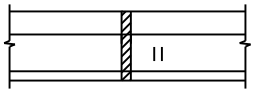	IF CRACKS IS VISIBLE AFTER REMOVAL OF JOGGLED FISHPLATES, CUT OUT AND REPLACE WITH CLOSURE RAIL.
		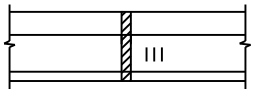	CUT OUT DEFECT IMMEDIATELY AND REPLACE WITH CLOSURE RAIL.

CLASSIFICATION OF RAIL DEFECTS FOR ULTRASONIC TEST

TYPE OF DEFECT	CODE TYPE	CODE SIZE	COMMENTS	
1 TRANSVERSE DEFECTS IN RAIL HEAD (TRANSVERSE FISSURES)	TD	XX	WHERE XX DENOTES SIZE OF DEFECT C2, C1, G4	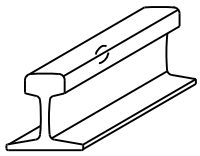
2 SURFACE DEFECTS (VISUAL CROWN BREAK OUT) SHELLING, SPALLING, HEAD CHECKS	SD	XX	WHERE XX DENOTES SIZE OF DEFECT J2, J3, K1	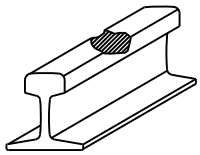
3 ENGINE BURN FRACTURE	TD/EBF	XX	WHRER XX DENOTES SIZE OF DEFECT J1	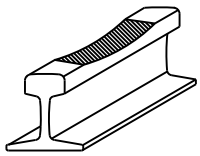
4 MULTIPLE TRANSVERSE HEAD DEFECTS	TDX	XX	WHERE XX DENOTES SIZE OF DEFECT C1, C2, G4	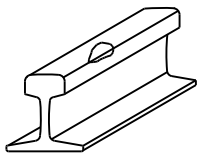
5 HORIZONTAL SPLIT HEAD	HSH	XX	WHERE XX DENOTES SIZE OF DEFECT LENGTH IN RAIL APPLICABLE A3, A4	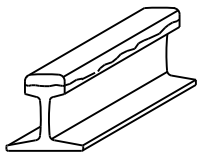
6 VERTICAL SPLIT HEAD	VSH	XX	WHERE XX DENOTES SIZE OF DEFECT LENGTH IN RAIL APPLICABLE A1, A2	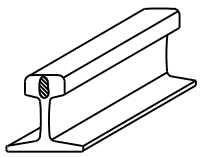
7 HEAD AND WEB SEPARATION	HW	XX	WHERE XX DENOTES SIZE OF DEFECT LENGTH IN RAIL APPLICABLE B1	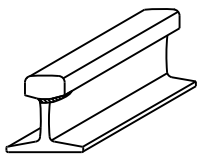
8 FOOT AND WEB SEPARATION	FW	XX	WHERE XX DENOTES SIZE OF DEFECT LENGTH IN RAIL APPLICABLE B3	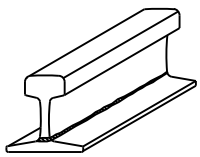

CLASSIFICATION OF RAIL DEFECTS FOR ULTRASONIC TEST

TYPE OF DEFECT	CODE TYPE	CODE SIZE	COMMENTS	
9 HORIZONTAL SPLIT WEB	HSW	XX	WHERE XX DENOTES SIZE OF DEFECT LENGTH IN RAIL APPLICABLE D1, B2	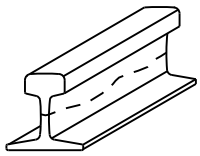
10 SPLIT WEB VERTICAL TRANSVERSE	SW	XX	WHERE XX DENOTES SIZE OF DEFECT LENGTH IN RAIL APPLICABLE C5	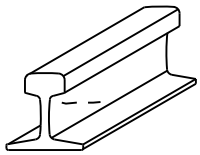
11 BOLT HOLE CRACK (ALL ANGLES)	BH	XX	WHERE XX DENOTES SIZE OF DEFECT LENGTH IN RAIL APPLICABLE C3, D2, K1, K2, G3	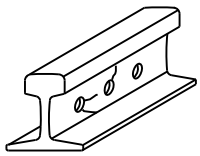
13 PIPED RAIL	PR	XX	WHERE XX DENOTES SIZE OF DEFECT LENGTH IN RAIL APPLICABLE C5	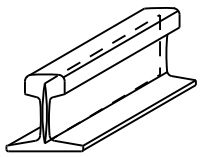
14 DEFECTIVE WELD	DW	XX	WELD INFORMATION MUST BE SPECIFIED IN REMARKS COLUMN. SIZES IN WEB AND HEAD MUST BE REPORTED SEPERATELY WHERE XX DENOTES SIZE OF DEFECT. H1 (FLASH BUTT WELD) H2,H3,H5,H6,H7 (THERMIT WELD) H4 (OTHER WELDS)	
17 BROKEN RAIL	BR		SIZE NOTATION NOT APPLICABLE G1,G2,G3,E1,E2,E3,E4,E5,C1,C2,F3	
18 MECHANICAL JOINT SUSPECT	MJS			
19 CORRODED RAIL	CR		SEE MANUAL FOR TRACK MAINTENANCE	

MINIMUM CUT DISTANCE FROM WELDED JOINTS AND MINIMUM DISTANCE BETWEEN JOINTS

MINIMUM CUT DISTANCE FROM WELDED JOINTS

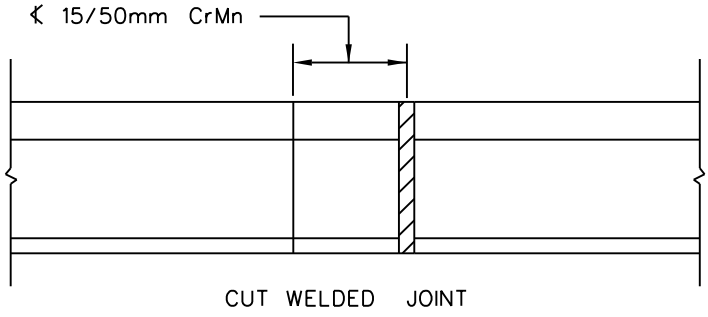

IF WELD IS DEFECTIVE, CUT RAIL NOT CLOSER THAN 15/50mm CrMn FROM THE CENTRE OF AN EXISTING WELDED JOINT. IF WELD IS SOUND, THE CUT MAY BE MADE THROUGH THE WELD.

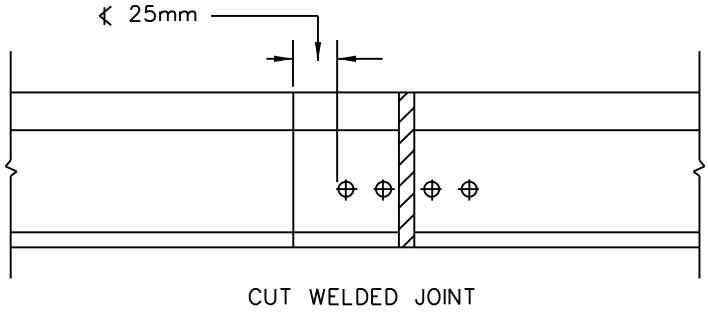

CUT RAIL NOT CLOSER THAN 25mm FROM THE EDGE OF AN EXISTING JOINT PLATE HOLE.

MINIMUM DISTANCE BETWEEN RAIL JOINTS

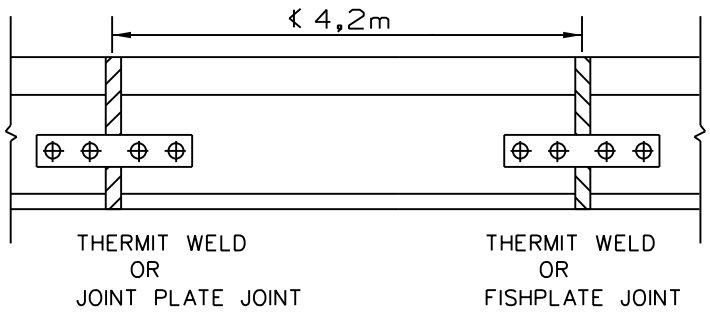

MINIMUM DISTANCE BETWEEN THERMIT WELD/FISHPLATE JOINT AND THERMIT WELD/JOINT PLATE JOINT MUST BE AT LEAST 4,2m.

EXCEPT IN THE CASE OF INSULATED JOINTS

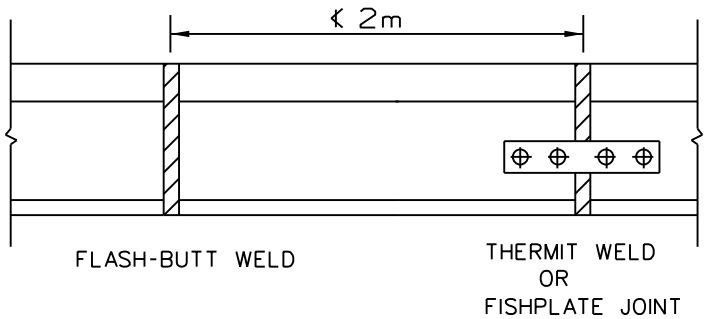

MINIMUM DISTANCE BETWEEN THERMIT WELD/JOINT PLATE JOINT AND FLASH-BUTT WELD MUST BE AT LEAST 2m. ANY DEVIATION MUST BE APPROVED BY THE DEPOT ENGINEER PERSONALLY.

TOLERANCES FOR VERTICAL AND SQUARENESS OF MOULD ALIGNMENT

(All measurements must be done with an engineering square)

Vertical alignment is to be measured at the top of rail.

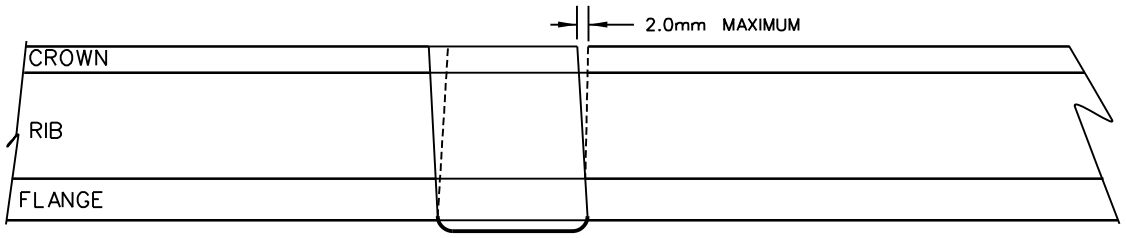

SQUARENESS

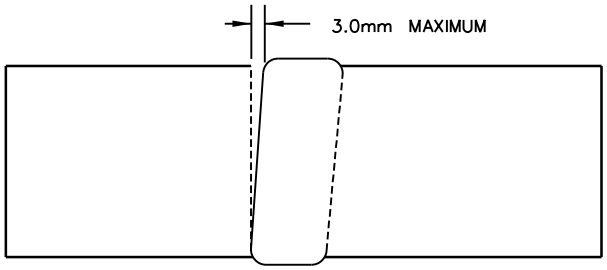

MOULD SQUARENESS AND ALIGNMENT ARE MEASURED AT THE WELD COLLAR ON THE UNDERSIDE OF THE RAIL.

MOULD ALIGNMENT

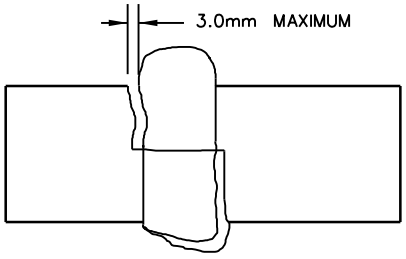

MISALIGNMENT IS MEASURED AT THE WELD COLLAR ON THE UNDERSIDE OF THE RAIL.

RAIL DRILLING FOR METRIC P AND M LUBRICATORS

ANNEXURE 19
SHEET 1 of 1

POINTS BLADE LUBRICATORS

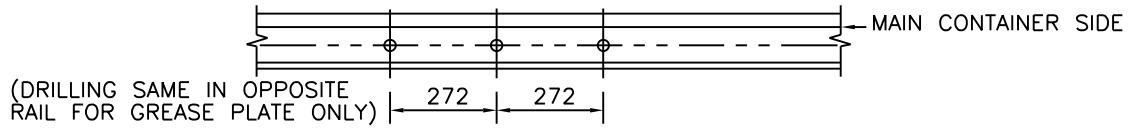

MODEL : C4/DSB

RUNNING RAIL LUBRICATORS

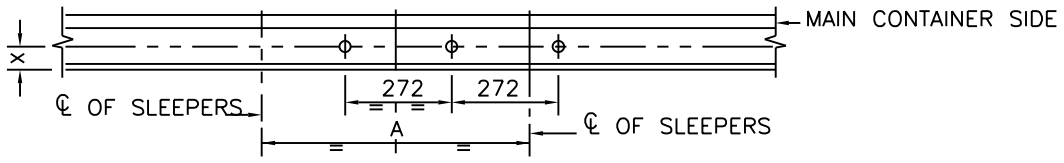

MODEL : C4

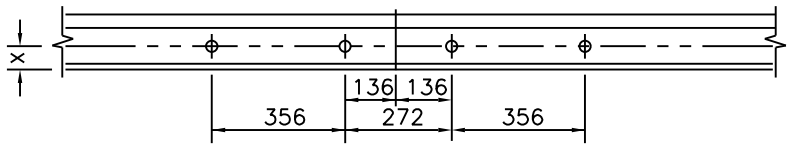

MODEL : C4/LG1

CHECK RAIL LUBRICATOR

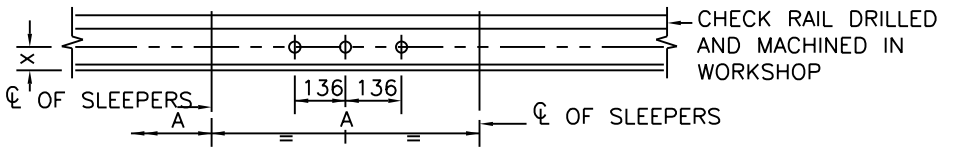

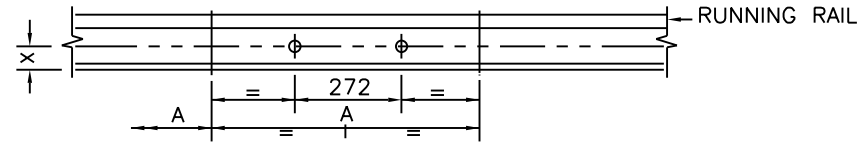

MODEL : C4/DCR3

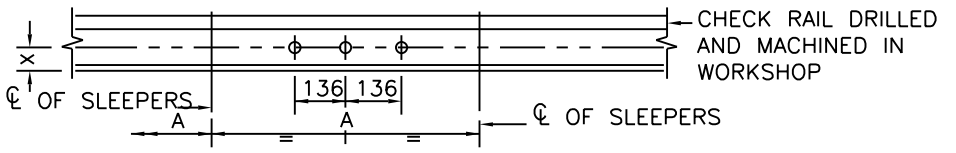

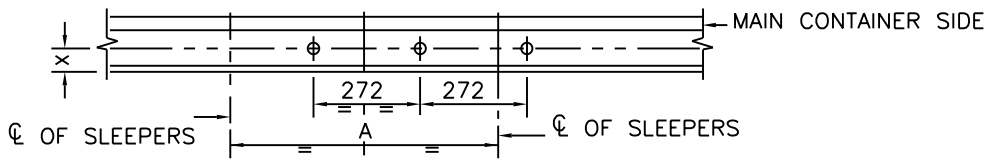

MODEL : C4/DCR

RAIL (kg)	DIMENSIONS	
	A	X
30	800	46
40	700	54
48	650/700	66
57	650/700	80

REMARKS:
1. ALL HOLES MUST BE DRILLED ø22mm.

JUMPERING WHEN TRACTION RAIL IS REPLACED

ANNEXURE 20
SHEET 1 of 1

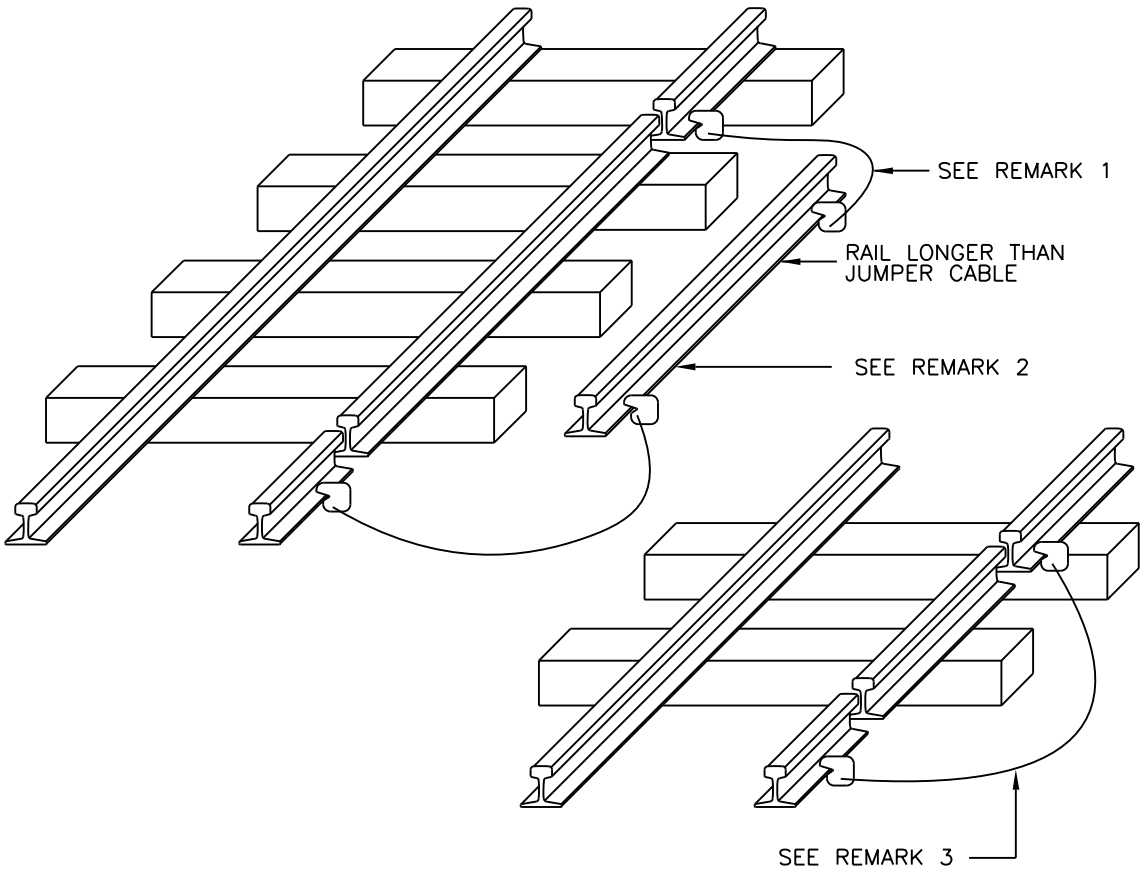

REMARKS:

1. SINGLE JUMPER CABLE FOR AC, DOUBLE JUMPER CABLE FOR DC, SEE SPECIFICATION CEE.0079 (LATEST REVISION).
2. USING TWO JUMPER CABLES, ATTACH ONE CLAMP OF EACH JUMPER TO EACH END OF THE NEW RAIL. ATTACH CLAMPS AT THE OTHER END OF EACH CABLE TO THE RAILS ON EITHER SIDE OF THE RAIL TO BE REMOVED. THE BASE OF THE JUMPER CLAMP AND THE RAIL MUST NEVER BE TOUCHED SIMULTANEOUSLY WHEN CONNECTING OR DISCONNECTING. THE CLAMP MUST BE PUSHED ONTO THE RAIL FLANGE BY HOLDING ONTO THE INSULATED CABLE. WHILE MAINTAINING THIS CONTACT, THE CLAMP MUST BE FIXED FIRMLY ONTO THE RAIL TO ENSURE CONTINUOUS ELECTRICAL CONTACT.
3. WHEN REPLACING SHORT LENGTHS OF RAIL OR FITTING FISH PLATES ACROSS A RAIL BREAK, THE JUMPER MAY BE CONNECTED DIRECTLY ACROSS THE GAP BEFORE FITTING OF THE FISH PLATES OR REMOVAL OF THE PORTION OF RAIL.
4. JUMPER CABLES MUST BE USED WHEN INSTALLING OR REMOVING JOGGLED FISH PLATES AT A BROKEN WELD, AS WELL AS DURING TRACK WELDING.
5. ON ALTERNATING-CURRENT SECTIONS BOTH RAILS OF OFF-TRACKING PLATFORMS FOR ON TRACK MACHINES MUST BE CONNECTED TO THE RUNNING RAIL BY MEANS OF JUMPER CABLES BEFORE THE OFF-TRACKING PLATFORMS ARE USED.

TYPICAL TURNOUTS : SETS OF POINTS

ANNEXURE 21
SHEET 1 of 3

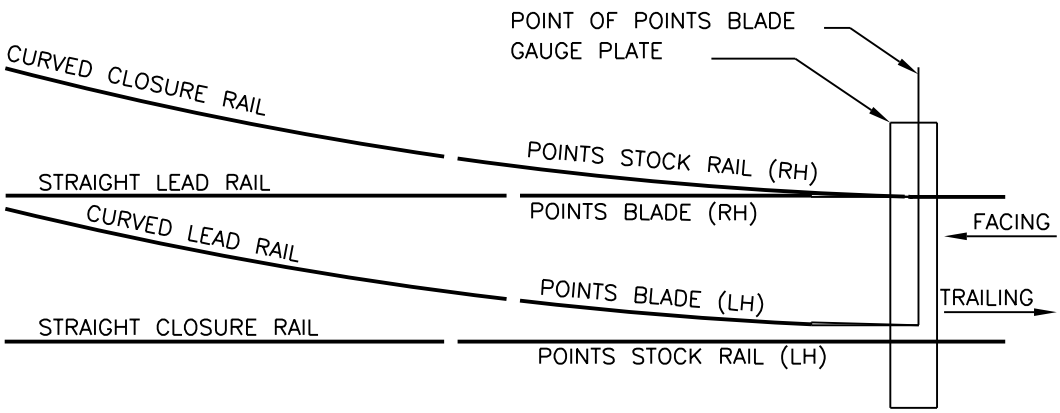

SEMI–CURVED HINGED POINTS BLADE

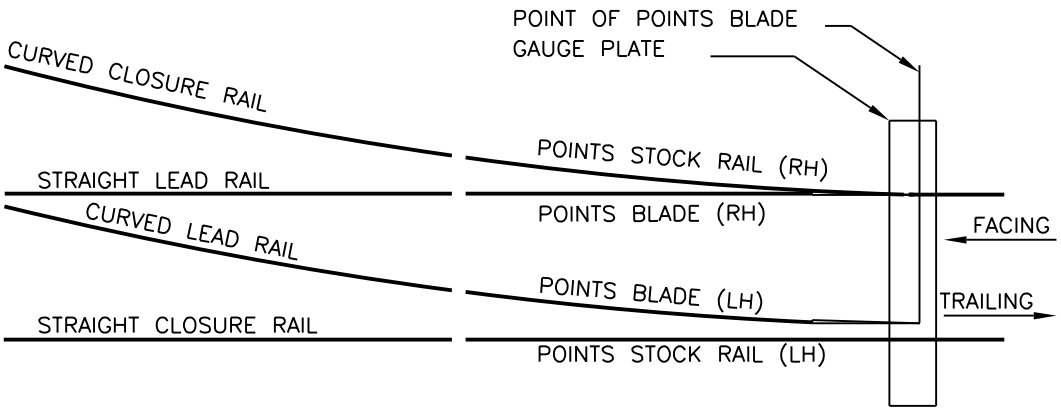

FULLY CURVED FLEXIBLE POINTS BLADE

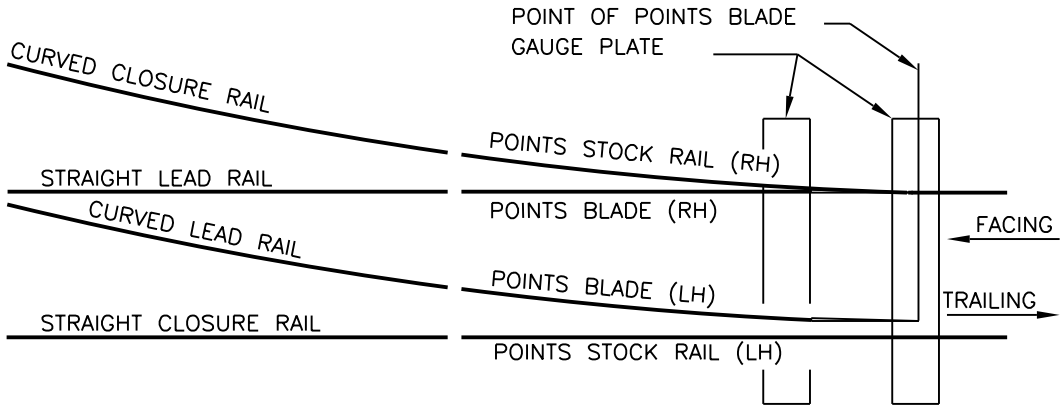

TRAILABLE SELF–NORMALISING POINTS BLADE

TYPICAL TURNOUTS : CROSSINGS

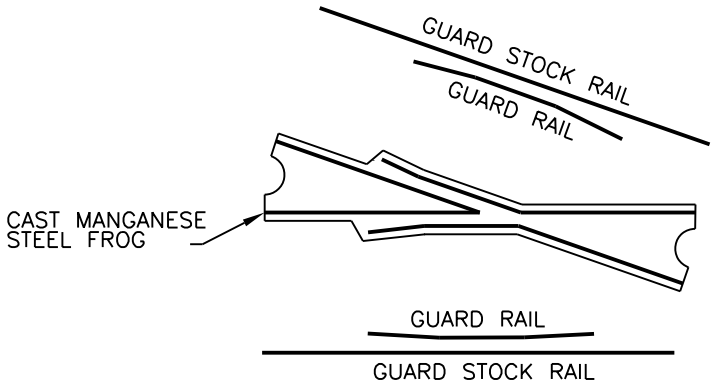

CROSSING WITH MANGANESE STEEL FROG

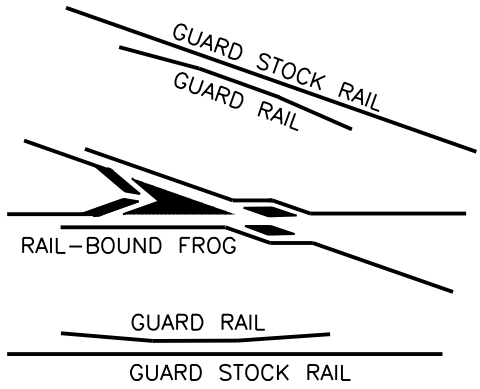

CROSSING WITH RAIL–BOUND FROG

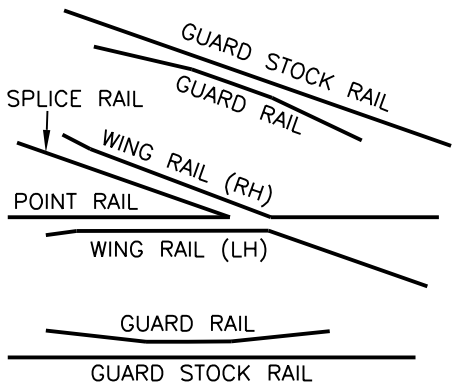

CROSSING WITH RAIL–MANUFACTURED FROG

TYPICAL TURNOUTS : CROSSINGS WITH MOVEABLE VEE

ANNEXURE 21
SHEET 3 of 3

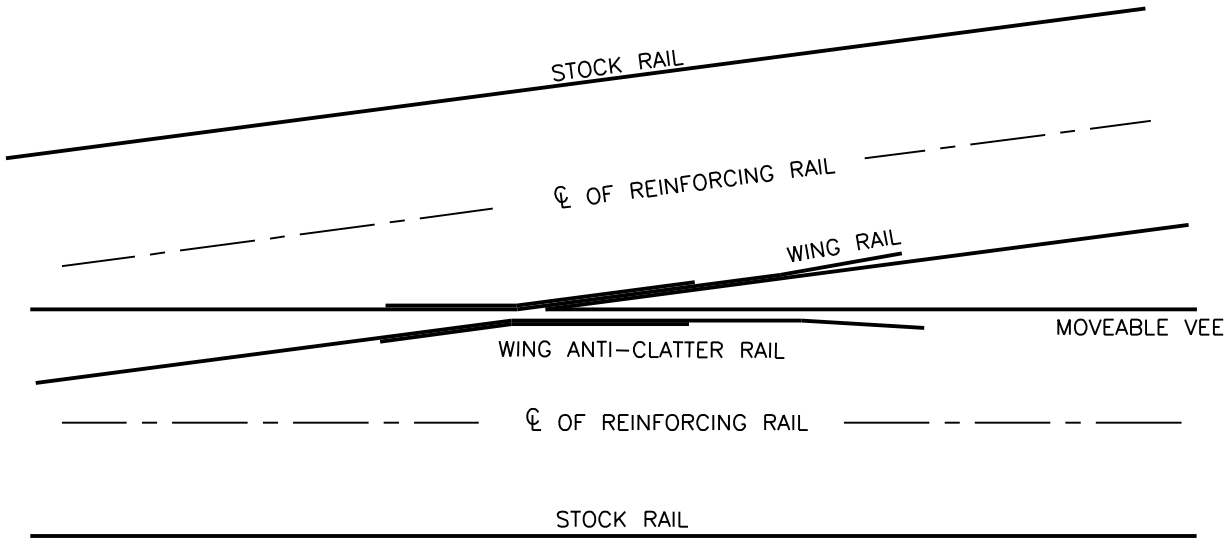

WITH HINGED JOINT

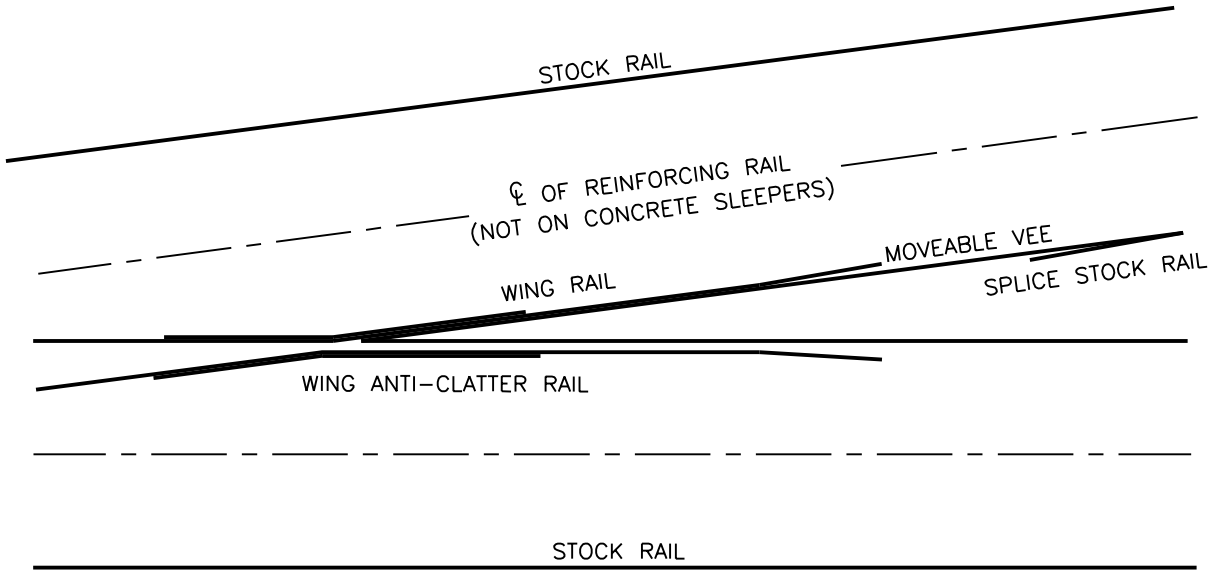

WITH BACK SLIDING JOINT

TURNOUTS WITH SEMI–CURVED HINGED POINTS BLADES : LAYOUT

ANNEXURE 22
SHEET 1 of 7

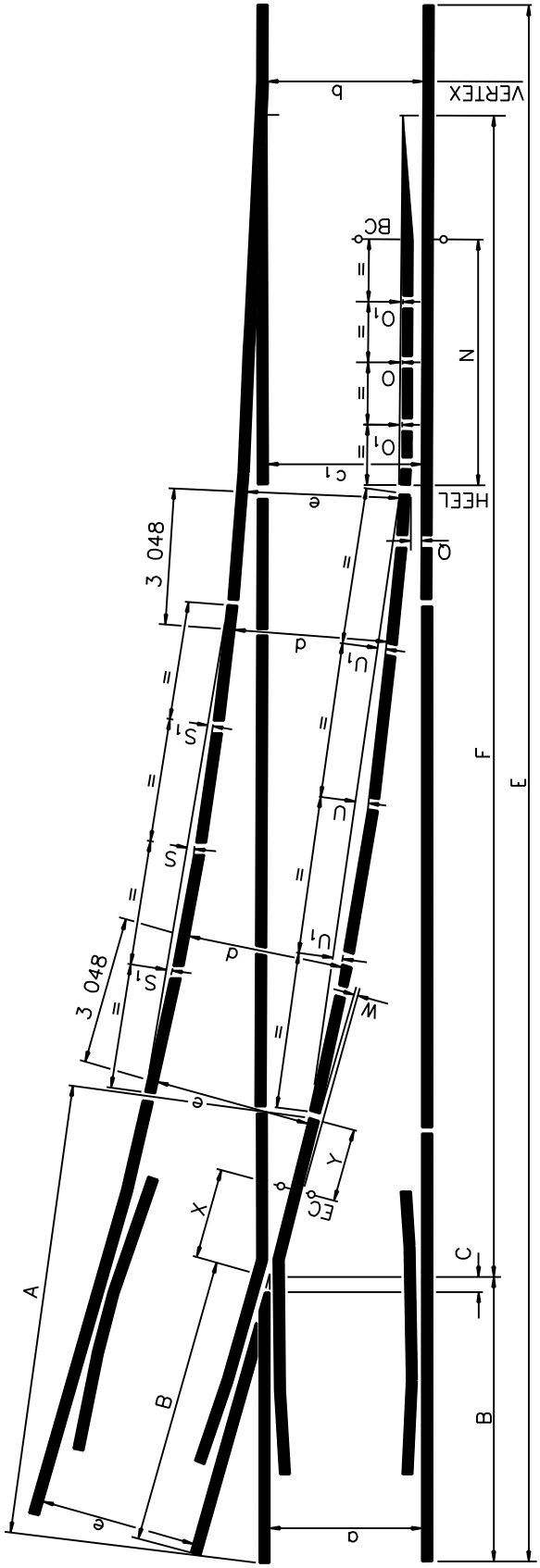

REMARKS:
1. THE GAUGE OF THE STRAIGHT TRACK WILL BE NOMINAL THROUGHOUT, EXCEPT BETWEEN POINT AND HEEL OF POINTS BLADE.
2. ⊕ THIS DESIGN IS BASED ON ORIGINAL 3'–6" GAUGE.
3. ⊕ EQUAL–SPLIT SET.
4. FOR OTHER DIMENSIONS SEE ANNEXURE 23 SHEETS 1 AND 4.

a	DESIGN	RAIL	ANGLE	GAUGE			
				b	c_1	d	e
1 067 ⊕ 610	HINGED POINTS BLADE	48kg	1:9 AND 1:12	1 073	1 067	1 073	1 070
		48kg	1:8	1 080	1 067	1 080	1 070
		48kg	1:7	1 080	1 073	1 080	1 070
		48kg	1:6 ⊕	1 073	1 073	1 070	1 070
		30kg	1:9	616	613	616	613

TURNOUTS WITH FULLY CURVED FLEXIBLE POINTS BLADES : LAYOUT

REMARKS:

1. THE GAUGE OF THE STRAIGHT TRACK WILL BE NOMINAL THROUGHOUT, EXCEPT BETWEEN POINT AND HEEL OF POINTS BLADE.
2. ◈ THIS DESIGN IS BASED ON ORIGINAL 3'–6" GAUGE.
3. FOR OTHER DIMENSIONS SEE ANNEXURE 23 SHEETS 1 AND 3.

a	DESIGN	RAIL	ANGLE	GAUGE		
				a	b	c_1
1 067 ◈	FULLY CURVED FLEXIBLE POINTS BLADE	48/51kg	1:12	1 067	1 073	1 070
1 065		57/60kg	1:20	1 065	1 070	1 070

TURNOUTS WITH TRAILABLE SELF–NORMALISING POINTS BLADES : LAYOUT

REMARKS:

1. THE GAUGE OF THE STRAIGHT TRACK WILL BE NOMINAL THROUGHOUT, EXCEPT BETWEEN POINT AND HEEL OF POINTS BLADE.
2. FOR OTHER DIMENSIONS SEE ANNEXURE 23 SHEET 2.

a	DESIGN	RAIL	ANGLE	GAUGE	
				a	b
1 065	TRAILABLE SELF–NORMALISING POINTS BLADE	48kg	1:12	1 065	1 070

TURNOUTS WITH FULLY CURVED FLEXIBLE POINTS BLADES AND CAST MANGANESE STEEL FROGS : LAYOUT

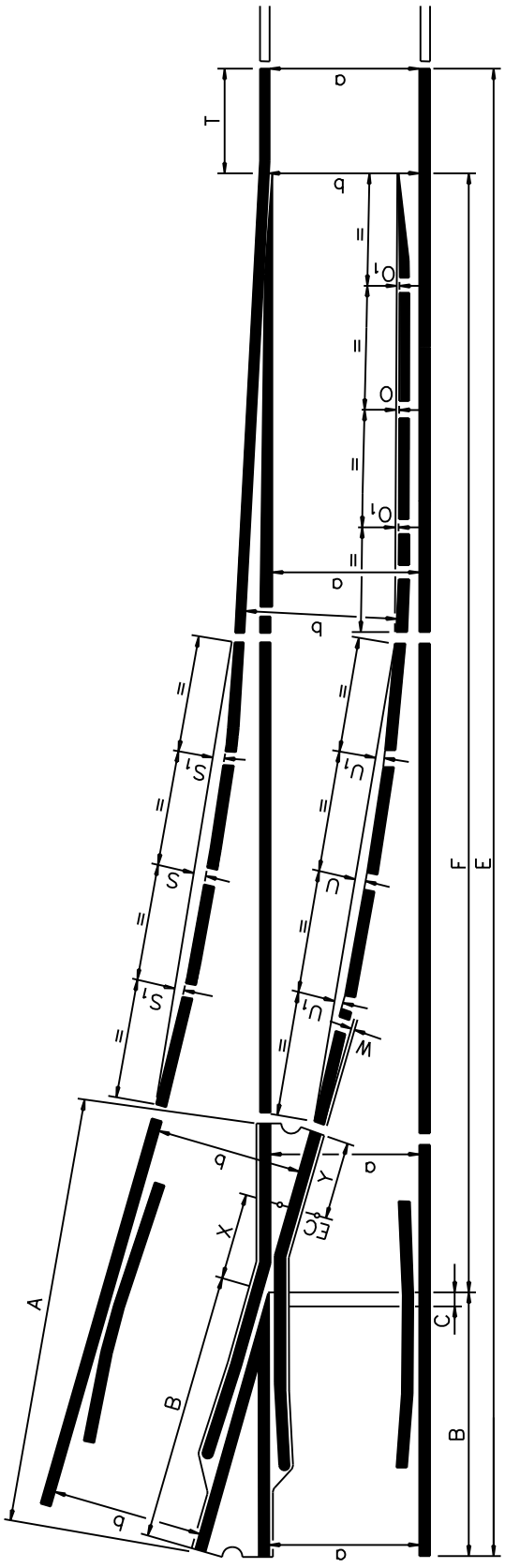

REMARKS:
1. THE GAUGE OF THE STRAIGHT TRACK WILL BE NOMINAL THROUGHOUT, EXCEPT BETWEEN POINT AND HEEL OF POINTS BLADE.
2. ◆ 1:6 EQUAL–SPLIT SET.
3. FOR OTHER DIMENSIONS SEE ANNEXURE 23 SHEETS 2 AND 3.

a	DESIGN	RAIL	ANGLE	GAUGE a	GAUGE b
1 065	FULLY CURVED FLEXIBLE POINTS BLADE AND CAST MANGANESE STEEL FROG	57/60kg	1:12	1 065	1 070
		48/51kg	1:12	1 065	1 070
		57/60kg	1:9	1 065	1 070
		57/60kg	1:8	1 065	1 070
		57/60kg	1:6 ◆	1 070	1 070
		48/51kg	1:6 ◆	1 070	1 070

TURNOUTS WITH FULLY CURVED FLEXIBLE POINTS BLADES AND RAILBOUND FROGS : LAYOUT

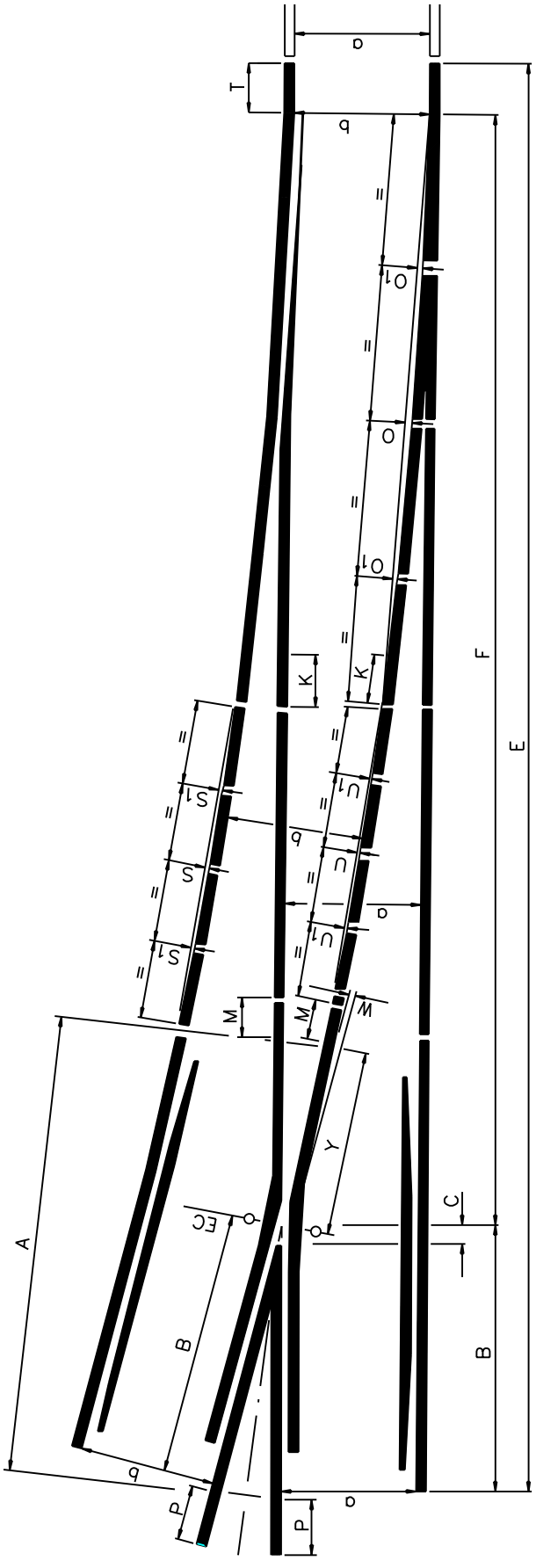

REMARKS:

1. THE GAUGE OF THE STRAIGHT TRACK WILL BE NOMINAL THROUGHOUT, EXCEPT BETWEEN POINT AND HEEL OF POINTS BLADE.
2. FOR OTHER DIMENSIONS SEE ANNEXURE 23 SHEETS 3 AND 7.

a	DESIGN	RAIL	ANGLE	GAUGE a	GAUGE b
1 065	FULLY CURVED FLEXIBLE POINTS BLADE	57/60kg	1:12	1 065	1 070
			1:9	1 065	1 070
		48/51kg	1:12	1 065	1 070

TURNOUTS WITH FULLY CURVED FLEXIBLE COMPOSITE POINTS BLADES AND RAILBOUND FROGS : LAYOUT

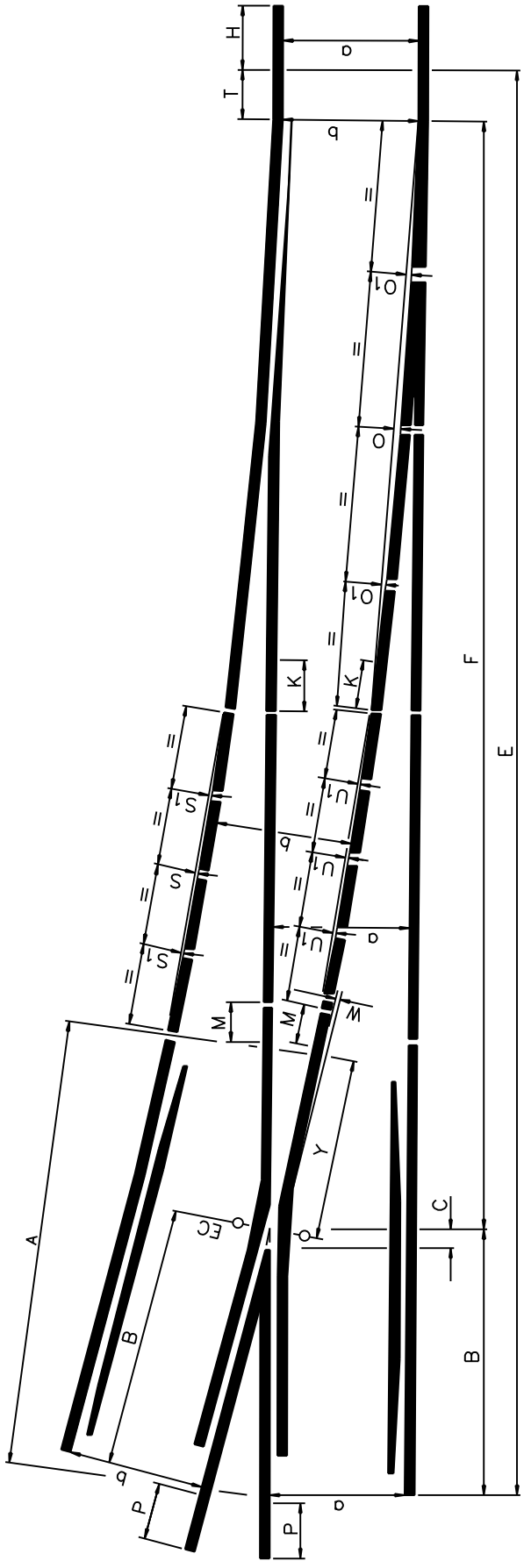

REMARKS:

1. ⊕ THE GAUGE OF THE STRAIGHT TRACK WILL BE NOMINAL THROUGHOUT, EXCEPT BETWEEN POINT AND HEEL OF POINTS BLADE.
2. FOR OTHER DIMENSIONS SEE ANNEXURE 23 SHEETS 5 AND 8.

a	DESIGN	RAIL	ANGLE	GAUGE a	GAUGE b
1 065	FULLY CURVED FLEXIBLE COMPOSITE POINTS BLADE	S-60 SAR/ ZS-60 SAR	1:9 ⊕	1 065	1 070
			1:12	1 065	1 065
		UIC-60/ Zu1-60	1:12	1 065	1 065

TURNOUTS WITH FULLY CURVED FLEXIBLE COMPOSITE POINTS BLADES AND MOVABLE V-PIECES WITH BACK SLIDING JOINTS : LAYOUT

ANNEXURE 22
SHEET 7 of 7

REMARKS:

1. FOR OTHER DIMENSIONS SEE ANNEXURE 23 SHEETS 5 AND 8.

a	DESIGN	RAIL	ANGLE	GAUGE	
				a	b
1 065	FULLY CURVED FLEXIBLE COMPOSITE POINTS BLADE	S-60 SAR/ ZS-60 SAR	1:20	1065	1065
		UIC-60/ Zu1-60	1:20	1065	1065

TURNOUTS 48kg : 1 067mm TRACK
GAUGE : DIMENSIONS

	TYPE OF POINTS BLADE			SEMI-CURVED HINGED POINTS BLADE						FULLY CURVED FLEXIBLE POINTS BLADE
	ANGLE OF TURNOUT			1:6 9°-27'-44"	1:7 8°-7'-48"	1:8 7°-7'-30"	1:9 6°-20'-25"	1:9 6°-20'-25"	1:12 4°-45'-49"	1:12 4°-45'-49"
A	LENGTH OF CROSSING			3 990	4 553	4 820	5 347	5 347	6 909	6 909
B	INTERSECTION OF GAUGES TO END			2 487	2 499	2 771	3 145	3 145	3 915	3 915
C	INTERSECTION OF GAUGES TO NOSE			76	89	102	114	114	152	152
	LENGTH OF POINTS BLADES			3 353	3 658	4 064	4 877	5 486	6 096	9 144
D	OVERALL LENGTH OF CROSS-OVER ROADS			–	40 758	45 392	51 518	53 042	66 814	66 859
E	OVERALL LENGTH			13 510	16 526	18 188	20 718	21 480	26 391	26 391
F	POINT OF POINTS BLADE TO INTERSECTION OF GAUGES			10 143	13 138	14 528	16 684	17 447	21 587	21 587
⊗	CLOSURE RAIL (STRAIGHT)			–	6 000	7 000	8 000	8 000	11 000	10 000
⊗	CLOSURE RAIL (CURVED)			4 000	6 000	7 000	8 000	8 000	11 000	10 000
⊗	LEAD RAIL (STRAIGHT)			–	8 000	9 000	10 000	10 000	13 000	10 000
⊗	LEAD RAIL (CURVED)			6 000	8 000	9 000	10 000	10 000	13 000	10 000
	RADIUS			137 160	103 734	137 973	173 431	171 602	300 228	304 800
W	OFFSETS ARE BASED ON ACTUAL DIMENSIONS	CURVED WING RAIL		1,2	21	14,3	13,5	14,2	11	11
O		POINTS BLADE	MIDDLE	4,3	1,7	4,8	5,6	6,8	5	34
O_1			QUARTER	3,2	1,3	3,6	4	5,2	4	26
S		CLOSURE RAIL	MIDDLE	13	35	35	40	42	44	37
S_1			QUARTER	10	26	26	30	31	33	28
U		LEAD RAIL	MIDDLE	25	67	64	67	70	65	37
U_1			QUARTER	19	50	48	50	52	49	28
X	EC TO INTERSECTION OF GAUGES			945	0	74	40	0	425	425
Y	EC TO END OF WING RAIL			572	2 065	1 984	2 170	2 210	2 575	2 575
N	BC TO HEEL			2 165	1 202	2 289	2 746	3 019	3 432	–
Q	HEEL OPENING			132	85	88	90	92	89	–
	VERTEX TO POINT OF POINTS BLADE			132	165	197	238	275	297	–
T	END OF STOCK RAIL TO POINT OF POINTS BLADE			889	889	889	889	889	889	889
	DRAWING NUMBERS TYPE E			7 051	7 015 SHEET 4	7 015 SHEET 3	7 015 SHEET 2	7 015 SHEET 2-003	7 015 SHEET 1	7 047

REMARKS: 1. 1:6 IS AN EQUAL-SPLIT SET.
2. ⊗ CUT TO SIZE FROM LENGTHS SUPPLIED.
3. THESE DESIGNS ARE BASED ON ORIGINAL 1065 GAUGE.
4. FOR LAYOUTS SEE ANNEXURE 22 SHEETS 1 AND 2.
5. OVERALL LENGTH OF CROSS-OVER ROADS IS BASED ON ORIGINAL 4M TRACK CENTRES.

TURNOUTS 48/51kg : 1 065mm TRACK
GAUGE : DIMENSIONS

	TYPE OF POINTS BLADE			FULLY–CURVED FLEXIBLE POINTS BLADE		SELF NORMALISING POINTS BLADE
	ANGLE OF TURNOUT			1:6 9°–27'–44"	1:12 4°–45'–49"	1:12 4°–45'–49"
A	LENGTH OF CROSSING			4 400	6 909	6 909
B	INTERSECTION OF GAUGES TO END			2 531	3 915	3 915
C	INTERSECTION OF GAUGES TO NOSE			85	156	152
	LENGTH OF POINTS BLADES			10 210	9 000	6 000
D	OVERALL LENGTH OF CROSS–OVER ROADS			–	67 288	67 288
E	OVERALL LENGTH			15 500	26 391	26 390
F	POINT OF POINTS BLADE TO INTERSECTION OF GAUGES			12 088	21 586	21 586
⊗	CLOSURE RAIL (STRAIGHT)			–	10 000	11 000
⊗	CLOSURE RAIL (CURVED)			–	10 000	11 000
⊗	LEAD RAIL (STRAIGHT)			–	10 000	13 000
⊗	LEAD RAIL (CURVED)			–	10 000	13 000
	RADIUS			191 231	320 845	321 508
W	OFFSETS ARE BASED ON ACTUAL DIMENSIONS	CURVED WING RAIL		–	11	11
O		POINTS BLADE	MIDDLE	68	32	14
O_1			QUARTER	51	24	10,5
S		CLOSURE RAIL	MIDDLE	–	36	44,5
S_1			QUARTER	–	27	33,4
U		LEAD RAIL	MIDDLE	–	36	62
U_1			QUARTER	–	27	46,5
X	EC TO INTERSECTION OF GAUGES			–1 216	425	425
Y	EC TO END OF WING RAIL			3 100	2 575	2 575
Q	HEEL OPENING			–	–	77
T	END OF STOCK RAIL TO POINT OF POINTS BLADE			890	890	890
	DRAWING NUMBERS TYPE E			7 075	7 084	7 085

REMARKS:
1. 1:6 IS AN EQUAL–SPLIT SET.
2. ⊗ CUT TO SIZE FROM LENGTHS SUPPLIED.
3. FOR LAYOUTS SEE ANNEXURE 22 SHEETS 3 AND 4.
4. OVERALL LENGTH OF CROSS–OVER ROADS IS BASED ON 4 000mm TRACK CENTRES.

TURNOUTS 57/60kg : 1 065mm TRACK GAUGE : DIMENSIONS

	TYPE OF POINTS BLADE			FULLY-CURVED FLEXIBLE POINTS BLADE				
	ANGLE OF TURNOUT			1:6 9°-27'-44"	1:8 7°-7'-30"	1:9 6°-20'-25"	1:12 4°-45'-49"	1:20 2°-51'-45"
A	LENGTH OF CROSSING			4 400	4 820	5 891	7 533	11 574
B	INTERSECTION OF GAUGES TO END			2 530	2 771	3 725	4 540	–
C	INTERSECTION OF GAUGES TO NOSE			85	120	117	156	–
	LENGTH OF POINTS BLADES			10 214	7 075	9 000	9 000	12 000
D	OVERALL LENGTH OF CROSS-OVER ROADS			–	45 688	51 874	67 288	108 194
E	OVERALL LENGTH			15 500	18 188	21 299	27 016	42 251
F	POINT OF SWITCH BLADE TO INTERSECTION OF GAUGES			12 088	14 527	16 684	21 586	34 703
⊗	CLOSURE RAIL (STRAIGHT)			–	6 000	6 000	10 000	18 000
⊗	CLOSURE RAIL (CURVED)			–	6 000	6 000	10 000	18 000
⊗	LEAD RAIL (STRAIGHT)			–	6 000	6 000	10 000	18 000
⊗	LEAD RAIL (CURVED)			–	6 000	6 000	10 000	18 000
	RADIUS			191 231	142 958	178 938	320 845	904 553
W	OFFSETS ARE BASED ON ACTUAL DIMENSIONS	CURVED WINGS RAIL		–	14,6	13,2	14	6,8
O		POINTS BLADE	MIDDLE	68,2	43,8	56,4	31,6	19,9
O_1			QUARTER	51,2	32,8	42,3	23,7	14,9
S		CLOSURE RAIL	MIDDLE	–	26	21,4	36,1	44,8
S_1			QUARTER	–	19,5	16	27,1	33,6
U		LEAD RAIL	MIDDLE	–	26	21,2	35,8	44,8
U_1			QUARTER	–	19,5	15,9	26,9	33,6
X	EC TO INTERSECTION OF GAUGE			-1 216	0	0	0	–
Y	EC TO END OF WING RAIL			3 099	2 058	2 175	3 000	3 514
T	END OF STOCK RAIL TO POINT OF POINTS BLADE			890	890	890	890	760
H	INDICATES POSITIONS AND AREAS WHERE EXOTHERMAL WELD JOINTS ARE LOCATED			–	–	–	–	–
K				–	–	–	–	–
M				–	–	650	600	–
P				–	–	650	650	–
	DRAWING NUMBERS TYPE E			7 078	7 076	7 089	7 088	7 094

REMARKS:
1. 1:6 IS AN EQUAL-SPLIT SET.
2. FOR LAYOUTS SEE ANNEXURE 22 SHEETS 2, 4 AND 5.
3. ⊗ CUT TO SIZE FROM LENGTHS SUPPLIED.
4. INFORMATION FOR 1:9 AND 1:12 IS BASED ON THE USE OF RAILBOUND FROGS.
5. LENGTH OF FROG FOR INITIAL INSTALLATION.
6. TOTAL LENGTH OF CROSS-OVER ROADS BASED ON 4 000 mm TRACK CENTRES.

TURNOUTS 30kg : 610mm TRACK GAUGE : DIMENSIONS

	ANGLE OF TURNOUT			1:9 6°–20'–25"
A	LENGTH OF CROSSING			4 572
B	INTERSECTION OF GAUGES TO END			2 515
C	INTERSECTION OF GAUGES TO NOSE			114
	LENGTH OF POINTS BLADE			3 353
D	OVERALL LENGTH OF CROSS–OVER ROADS			38 760
E	OVERALL LENGTH			12 309
F	POINT OF POINTS BLADE TO INTERSECTION OF GAUGES			8 931
	CLOSURE RAIL (STRAIGHT)			–
	CLOSURE RAIL (CURVED)			–
	LEAD RAIL (STRAIGHT)			3 508
	LEAD RAIL (CURVED)			3 534
	RADIUS			72 314
W	OFFSETS	CURVED WING RAIL		7,7
O	OFFSETS	POINTS BLADE	MIDDLE	1,8
O_1	OFFSETS	POINTS BLADE	QUARTER	1,3
S	OFFSETS	CLOSURE RAIL	MIDDLE	–
S_1	OFFSETS	CLOSURE RAIL	QUARTER	–
U	OFFSETS	LEAD RAIL	MIDDLE	21,6
U_1	OFFSETS	LEAD RAIL	QUARTER	16
X	EC TO INTERSECTION OF GAUGES			1 003
Y	EC TO END OF WING RAIL			1 060
N	BC TO HEEL			1 027
Q	HEEL OPENING			79
	VERTEX TO POINT OF POINTS BLADE			170
T	END OF STOCK RAIL TO POINT OF POINTS BLADE			864
	DRAWING NUMBER TYPE E			566 SHEET 5

REMARKS: 1. THIS DESIGN IS BASED ON ORIGINAL 2' – 0" GAUGE.
2. FOR LAYOUT SEE ANNEXURE 22 SHEET 1.

TURNOUTS S-60/ZS-60 SAR : 1 065mm TRACK GAUGE : DIMENSIONS

	TYPE OF POINTS BLADE			FULLY-CURVED COMPOSITE FLEXIBLE POINTS BLADE		
	ANGLE OF TURNOUT			1:9 6°-20'-25"	1:12 4°-45'-49"	1:20 2°-51'-45"
A	LENGTH OF CROSSING			5 950	6 945	15 813
B	INTERSECTION OF GAUGES TO END (THROAT TO END 1:20)			3 725	3 915	9 888
C	INTERSECTION OF GAUGES TO NOSE			117	156	–
L	END OF VEE TO THROAT			–	–	150
	LENGTH OF POINTS BLADES			9 000	10 150	15 700
D	OVERALL LENGTH OF CROSS-OVER ROADS			51 874	67 350	108 300
E	OVERALL LENGTH			21 299	26 391	44 034
F	POINT OF SWITCH BLADE TO INTERSECTION OF GAUGES (THROAT 1:20)			16 684	21 587	33 386
⊗	CLOSURE RAIL (STRAIGHT)			6 000	9 000	12 000
⊗	CLOSURE RAIL (CURVED)			6 000	9 000	12 000
⊗	LEAD RAIL (STRAIGHT)			6 000	9 000	12 000
⊗	LEAD RAIL (CURVED)			6 000	9 000	12 000
	RADIUS			178 938	320 665	904 553
W	OFFSETS	CURVE WING RAIL		22,3	39	39,4
O		POINTS BLADE	MIDDLE	67,1	47,2	37,6
O_1			QUARTER	50,3	35,4	28,2
S		CLOSURE RAIL	MIDDLE	25,2	31,6	19,9
S_1			QUARTER	18,9	23,7	14,9
U		LEAD RAIL	MIDDLE	25,2	31,6	19,9
U_1			QUARTER	18,9	23,7	14,9
Y	EC TO END OF WING RAIL			2 225	3 000	–
J	END OF VEE TO BACK END OF SPLICE RAIL			–	–	855
T	END OF STOCK RAIL TO POINT OF POINTS BLADE			890	890	760
H	INDICATES POSITIONS AND AREAS WHERE EXOTHERMAL JOINTS ARE LOCATED			710	610	740
K				800	850	800
M				600	2 000	1 200
P				650	1 500	650
	DRAWING NUMBER TYPE E			7 103	7 102	7 101

REMARKS:
1. ⊗ CUT TO SIZE FROM LENGTHS SUPPLIED.
2. ALL DIMENSIONS QUOTED ARE FOR INITIAL INSTALLATION.
3. FOR LAYOUTS SEE ANNEXURE 22 SHEETS 6 AND 7.
4. OFFSETS ARE BASED ON SUPPLIED LENGTHS.

TURNOUTS GERMAN UIC–60 : 1 065mm TRACK GAUGE : DIMENSIONS

	TYPE OF POINTS BLADE	FULLY–CURVED FLEXIBLE COMPOSITE POINTS BLADE	
	ANGLE OF TURNOUT	1:9 6°–20'–25"	1:12 4°–45'–49"
A	LENGTH OF CROSSING	VARIABLE	
B	INTERSECTION OF GAUGES TO END	VARIABLE	
C	INTERSECTION OF GAUGES TO NOSE	117	156
	LENGTH OF POINTS BLADES	11 300	13 650
D	OVERALL LENGTH OF CROSS–OVER ROADS	–	–
E	OVERALL LENGTH	22 650	29 408
F	POINT OF POINTS BLADE TO INTERSECTION OF GAUGES	19 415	23 929
	CLOSURE RAIL (STRAIGHT)	–	–
	CLOSURE RAIL (CURVED)	–	–
	LEAD RAIL (STRAIGHT)	–	–
	LEAD RAIL (CURVED)	–	–
	RADIUS	190 000	300 000
W	OFFSETS: CURVED WING RAIL	–	–
O	OFFSETS: POINTS BLADE: MIDDLE	84	77,6
O_1	OFFSETS: POINTS BLADE: QUARTER	63	58,2
S	OFFSETS: CLOSURE RAIL: MIDDLE	–	–
S_1	OFFSETS: CLOSURE RAIL: QUARTER	–	–
U	OFFSETS: LEAD RAIL: MIDDLE	–	–
U_1	OFFSETS: LEAD RAIL: QUARTER	–	–
X	EC TO INTERSECTION OF GAUGES	929	324
Y	EC TO END OF WING RAIL	–	–
T	END OF STOCK RAIL TO POINT OF POINTS BLADE	700	1 350
	DRAWING NUMBERS	700–E–739	700–E–736

TURNOUTS 48/51kg : 1 065mm
TRACK GAUGE : CONCRETE SLEEPERS :
DIMENSIONS

	TYPE OF POINTS BLADE			FULLY-CURVED FLEXIBLE POINTS BLADE
	ANGLE OF TURNOUT			1:12 4°-45'-49"
A	LENGTH OF CROSSING			7 227
B	INTERSECTION OF GAUGES TO END			4 275
C	INTERSECTION OF GAUGES TO NOSE			156
	LENGTH OF POINTS BLADES			9 000
D	OVERALL LENGTH OF CROSS-OVER ROADS			67 288
E	OVERALL LENGTH			26 751
F	POINT OF POINTS BLADE TO INTERSECTION OF GAUGES			21 586
⊗	CLOSURE RAIL (STRAIGHT)			10 000
⊗	CLOSURE RAIL (CURVED)			10 000
⊗	LEAD RAIL (STRAIGHT)			10 000
⊗	LEAD RAIL (CURVED)			10 000
	RADIUS			320 845
W	OFFSETS	CURVED WING RAIL		27
O	OFFSETS	POINTS BLADE	MIDDLE	31,6
O_1	OFFSETS	POINTS BLADE	QUARTER	23,7
S	OFFSETS	CLOSURE RAIL	MIDDLE	39
S_1	OFFSETS	CLOSURE RAIL	QUARTER	29,2
U	OFFSETS	LEAD RAIL	MIDDLE	39
U_1	OFFSETS	LEAD RAIL	QUARTER	29,2
Y	EC TO END OF WING RAIL			2 960
T	END OF STOCK RAIL TO POINT OF POINTS BLADE			890
H	INDICATES POSITIONS AND AREAS WHERE EXOTHERMAL JOINTS ARE LOCATED			–
K				–
M				1 200
P				800
	DRAWING NUMBER TYPE E			7 129

REMARKS:
1. ⊗ CUT TO SIZE FROM LENGTHS SUPPLIED.
2. ALL DIMENSIONS QUOTED ARE FOR INITIAL INSTALLATION.
3. FOR LAYOUT SEE ANNEXURE 22 SHEET 5.
4. DEVIATIONS FROM STANDARD DUE TO THE PROVISION FOR THERMIT WELDS.
5. OFFSETS ARE CALCULATED ON SUPPLIED LENGTHS.

TURNOUTS UIC-60 : 1 065mm TRACK GAUGE : CONCRETE SLEEPERS : DIMENSIONS

	TYPE OF POINTS BLADE			FULLY-CURVED FLEXIBLE COMPOSITE POINTS BLADE	
	ANGLE OF TURNOUT			1:12 4°-45'-49"	1:20 2°-51'-45"
A	LENGTH OF CROSSING			6 945	15 813
B	INTERSECTION OF GAUGES TO END (THROAT TO END 1:20)			3 915	9 888
C	INTERSECTION OF GAUGES TO NOSE			156	–
L	POINT OF VEE TO THROAT			–	150
	LENGTH OF POINTS BLADES			10 150	15 700
D	OVERALL LENGTH OF CROSS-OVER ROADS			67 350	108 300
E	OVERALL LENGTH			26 391	44 034
F	POINT OF POINTS BLADE TO INTERSECTION OF GAUGES (THROAT 1:20)			21 587	33 386
⊗	CLOSURE RAIL (STRAIGHT)			9 000	12 000
⊗	CLOSURE RAIL (CURVED)			9 000	12 000
⊗	LEAD RAIL (STRAIGHT)			9 000	12 000
⊗	LEAD RAIL (CURVED)			9 000	12 000
	RADIUS			320 665	904 553
W	OFFSETS	CURVED WING RAIL		39	39,4
O		POINTS BLADE	MIDDLE	47,2	37,6
O_1			QUARTER	35,4	28,2
S		CLOSURE RAIL	MIDDLE	31,6	19,9
S_1			QUARTER	23,7	14,9
U		LEAD RAIL	MIDDLE	31,6	19,9
U_1			QUARTER	23,7	14,9
Y	EC TO END OF WING RAIL			3 000	–
J	END OF VEE TO BACK END OF SPLICE RAIL			–	855
T	END OF STOCK RAIL TO POINT OF POINTS BLADE			890	760
H	INDICATES POSITIONS AND AREAS WHERE EXOTHERMAL JOINTS ARE LOCATED			610	740
K				850	800
M				2 000	1 200
P				1 500	650
	DRAWING NUMBERS TYPE E			7 131	7 130

REMARKS:
1. ⊗ CUT TO SIZE FROM LENGTHS SUPPLIED.
2. ALL DIMENSIONS QUOTED ARE FOR INITIAL INSTALLATION.
3. FOR LAYOUT SEE ANNEXURE 22 SHEETS 6 AND 7.
4. OFFSETS ARE CALCULATED ON SUPPLIED LENGTHS.

RADII OF TURNOUTS FROM CURVED TRACK

ANNEXURE 24
SHEET 1 of 1

TRACK GAUGE (mm)	1 065										610	
RADIUS OF THROUGH LINE (m)	CONTRARY FLEXURE (■)					SIMILAR FLEXURE (●)					■	●
	1:7	1:8	1:9	1:12	1:20	1:7	1:8	1:9	1:12	1:20	1:9	1:9
60	–	–	–	–	–	–	–	–	–	–	–	–
75	–	–	–	–	–	–	–	–	–	–	800	–
100	–	–	–	–	–	–	–	–	–	–	257	–
110	907	–	–	–	–	–	–	–	–	–	208	–
120	780	–	–	–	–	–	–	–	–	–	180	–
140	404	–	–	–	–	–	–	–	96	–	148	–
160	297	915	–	–	–	–	–	–	105	–	131	50
180	246	558	–	–	–	–	–	–	113	–	120	51
200	217	426	1 255	–	–	–	–	93	121	–	113	53
250	178	299	551	–	–	–	–	102	137	–	101	56
300	159	249	406	–	–	–	94	110	151	–	95	58
350	148	223	340	2 227	–	–	98	116	163	–	91	60
400	141	207	304	1 251	–	–	102	121	173	–	88	61
450	135	195	280	928	–	–	105	125	181	–	86	62
500	131	187	264	770	–	–	107	129	189	–	84	63
550	128	181	251	675	–	–	109	132	196	–	83	64
600	126	176	242	612	–	–	111	134	202	–	82	64
650	124	172	235	568	–	90	113	137	207	–	81	65
700	122	169	229	535	–	91	114	139	212	–	80	65
750	121	166	224	509	–	91	116	141	216	–	80	66
800	120	164	220	488	–	92	117	142	220	–	79	66
900	118	160	214	457	–	93	119	145	227	–	78	67
1 000	116	158	209	435	–	94	120	147	233	–	78	67
1 200	114	154	202	406	–	96	123	151	242	–	77	68
1 400	112	151	197	387	–	97	124	154	249	–	76	68
1 600	111	149	194	374	–	98	126	156	255	–	75	69
1 800	110	147	191	365	–	98	127	158	260	–	75	69
2 000	110	146	189	357	–	99	128	159	263	–	75	69
3 000	108	143	183	337	–	101	130	164	276	–	74	70
STRAIGHT	104	136	173	303	–	104	136	173	303	–	72	72

DIAMOND CROSSINGS 48kg 1:4½, 1:6, 1:7 AND 1:8 : 1 067mm TRACK GAUGE : LAYOUT AND DIMENSIONS

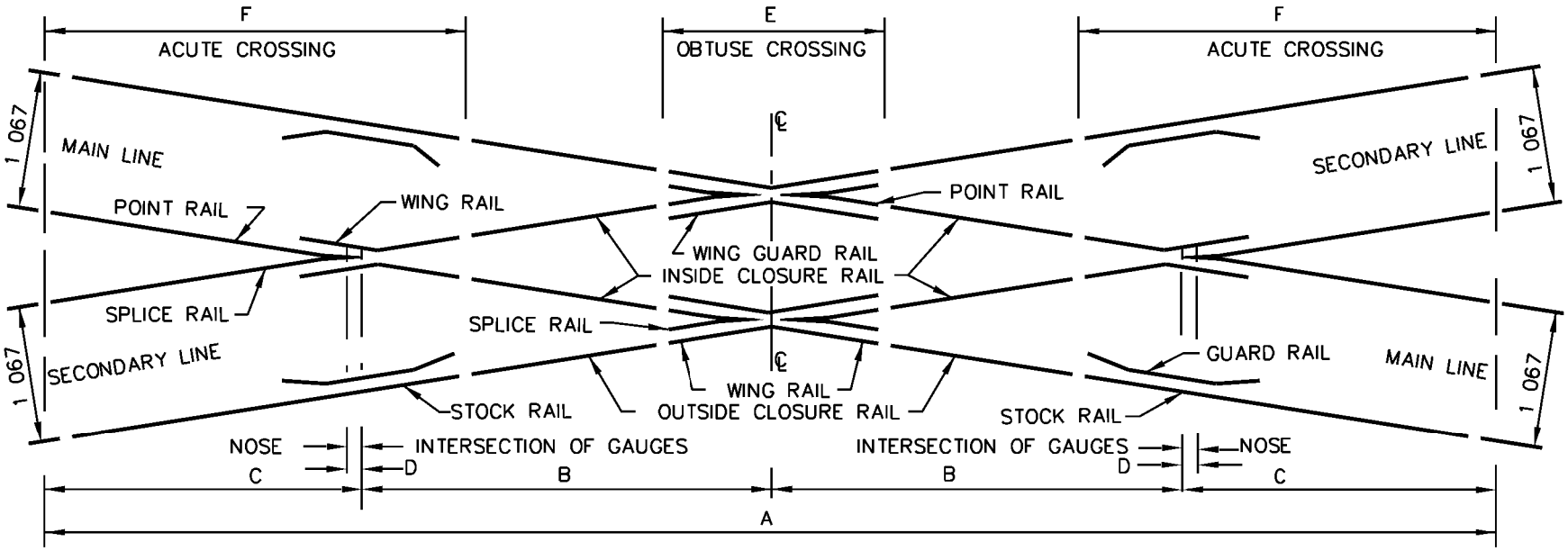

ANGLE OF DIAMOND CROSSING			1:4½ 12°–40'–50"	1:6 9°–31'–38"	1:7 8°–7'–48"	1:8 7°–7'–30"
A	OVERALL LENGTH		13 920	19 608	20 012	22 700
B	INTERSECTION OF GAUGES TO:	CENTRE LINE	4 831	6 423	7 525	8 585
C		END	2 129	3 381	2 481	2 765
D		NOSE	57	76	89	102
E	LENGTH OF OBTUSE CROSSING		4 261	7 398	4 108	4 705
F	LENGTH OF ACUTE CROSSING		4 823	6 099	4 416	4 566
	DRAWING NUMBERS	TYPE E	7 040	7 041	688	7 050

REMARKS:

1. WHEN ORDERING SINGLE ITEMS FOR REPLACEMENT, IT IS ESSENTIAL TO QUOTE STORES ITEM NUMBERS. REFER LIST OF STANDARD PERMANENT WAY MATERIAL, SECTION 53.
2. THIS DESIGN IS BASED ON ORIGINAL 1065 GAUGE.

DOUBLE SLIPS 48kg 1:7 : 1 067mm TRACK GAUGE : LAYOUT AND DIMENSIONS

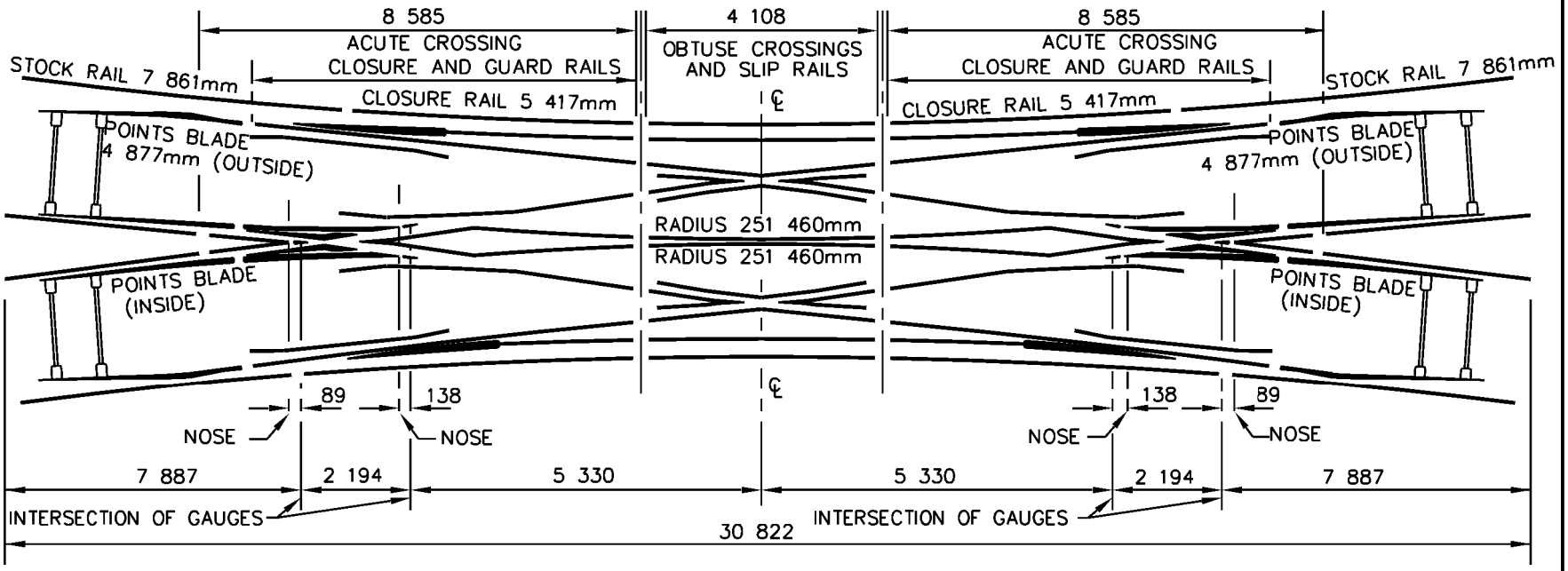

LOCATION	GAUGE
1 524mm BEFORE POINT OF POINTS BLADE	1 067
POINT OF POINTS BLADE	1 073
HEEL OF POINTS BLADE	1 067
ALL OTHER LOCATIONS	1 070

REMARKS:
1. WHEN ORDERING SINGLE ITEMS FOR REPLACEMENT, IT IS ESSENTIAL TO QUOTE STORES ITEM NUMBERS. REFER LIST OF STANDARD PERMANENT WAY MATERIALS, SECTION 53.
2. THIS DESIGN IS BASED ON ORIGINAL 1067 GAUGE.

SINGLE SLIPS 48kg 1:7 : 1 067mm TRACK GAUGE : : LAYOUT AND DIMENSIONS

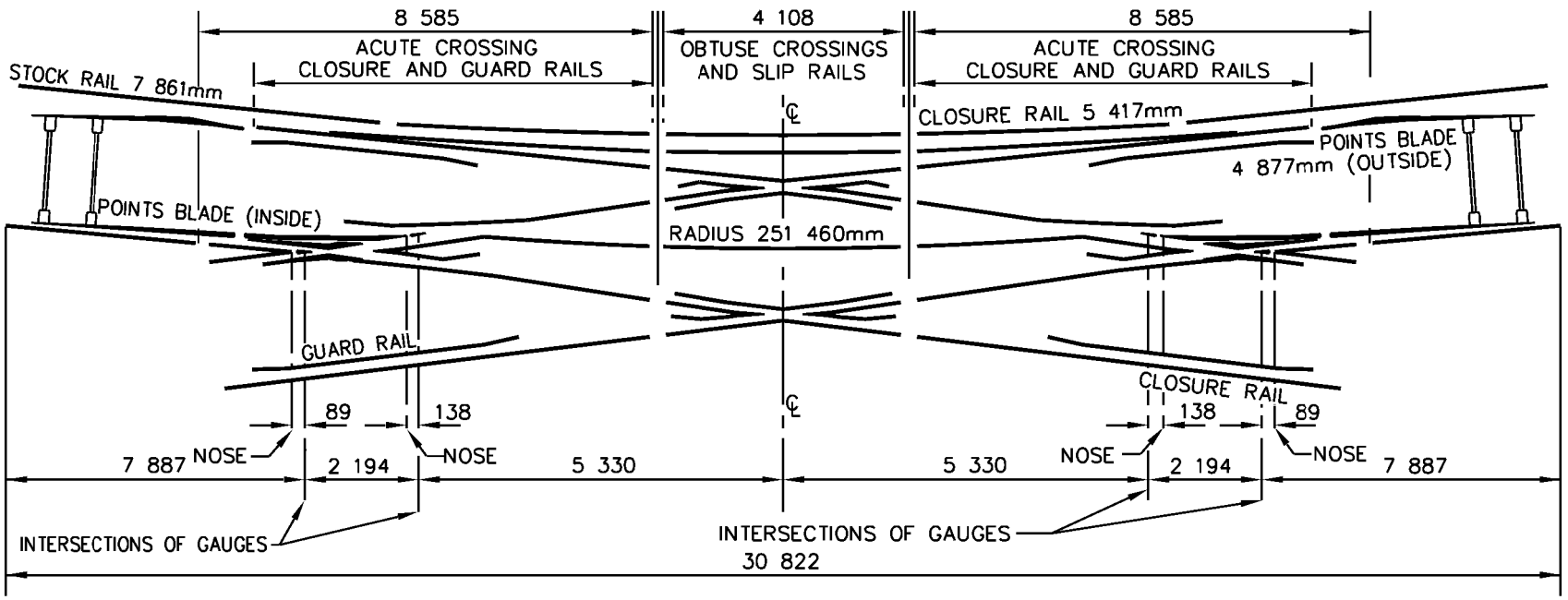

LOCATION	GAUGE
1 524mm BEFORE POINT OF POINTS BLADE	1 067
POINT OF POINTS BLADE	1 073
HEEL OF POINTS BLADE	1 067
ALL OTHER LOCATIONS	1 070

REMARKS:

1. WHEN ORDERING SINGLE ITEMS FOR REPLACEMENT, IT IS ESSENTIAL TO QUOTE STORES ITEM NUMBERS. REFER LIST OF STANDARD PERMANENT WAY MATERIALS, SECTION 53.
2. THIS DESIGN IS BASED ON ORIGINAL 1067 GAUGE.

DOUBLE SLIPS 48kg 1:7 : 1065mm TRACK GAUGE : VAE DESIGN : LAYOUT AND DIMENSIONS

ANNEXURE 25
SHEET 4 of 4

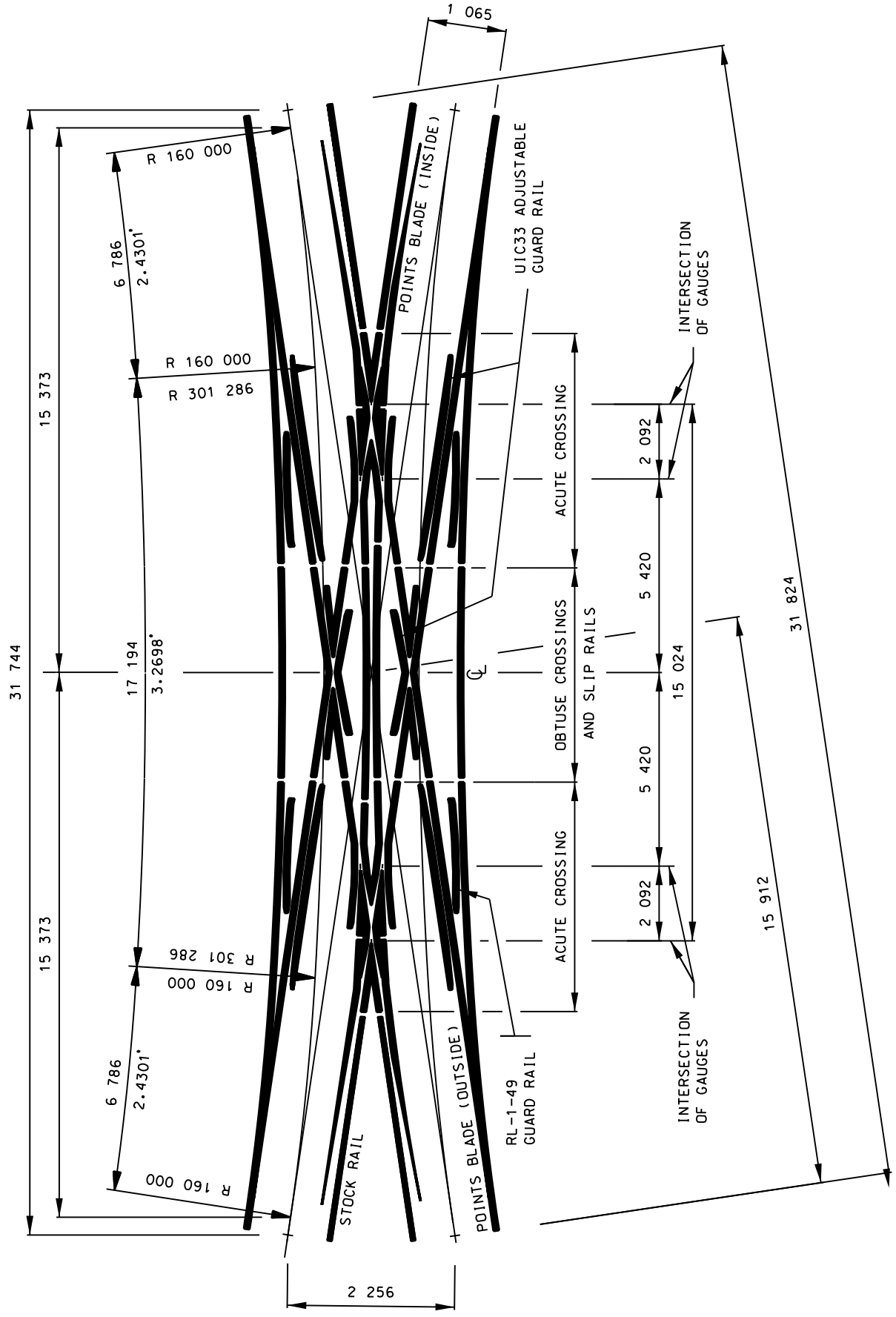

BLOCK JOINTS : TURNOUTS AND DIAMOND CROSSINGS

ANNEXURE 26
SHEET 1 of 2

REMARKS:

1. ⌶ POSSIBLE BLOCK JOINT POSITIONS IN OR OUTSIDE TURNOUTS.
2. ◓ ⌶ WHERE TURNOUTS ARE PART OF A GATHERING ROAD, BLOCK JOINTS ARE ALSO POSSIBLE.
3. WHEN BLOCK JOINTS ON SETS HAVE TO BE REPLACED CONSIDERATION MUST BE GIVEN TO MOVING THE BLOCK JOINTS TO THE TURNOUT PORTION OF THE SET.

BLOCK JOINTS : SINGLE AND DOUBLE SLIPS

ANNEXURE 26
SHEET 2 of 2

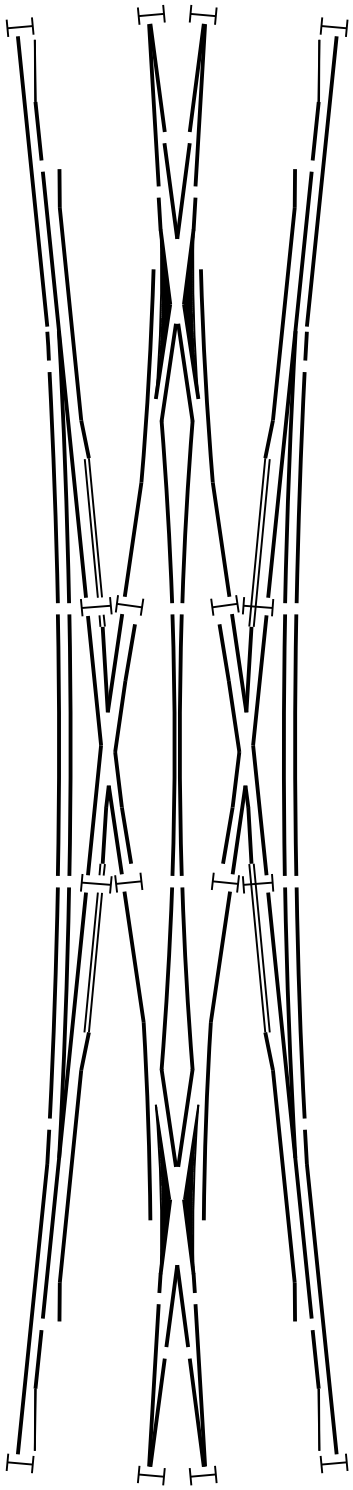

DOUBLE SLIP

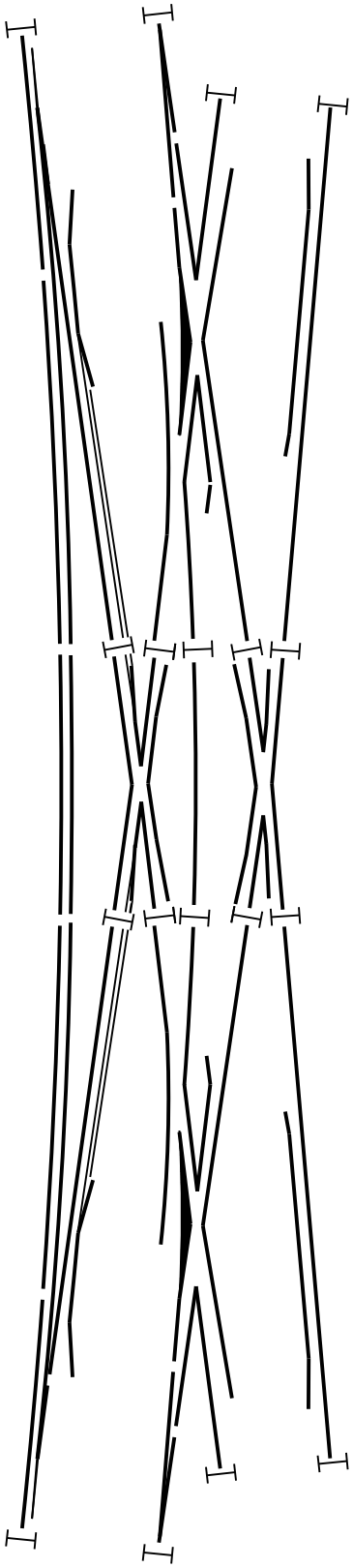

SINGLE SLIP

REMARKS:

1. I SHOWS POSSIBLE INSULATED JOINT POSITIONS.

TUMBLER WITH LOCKABLE KNUCKLE – JOINTED ARM

ANNEXURE 27
SHEET 1 of 4

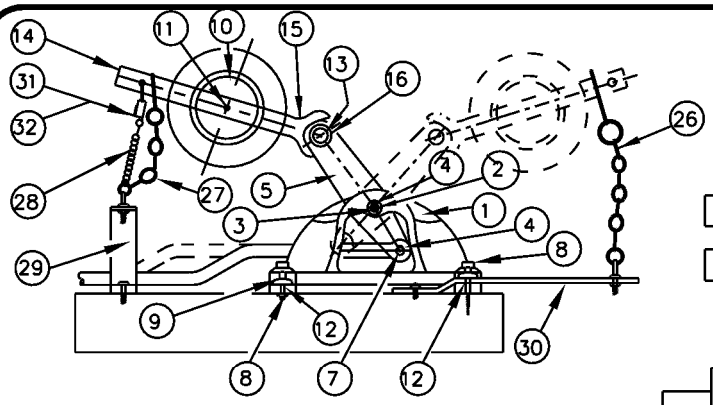

TUMBLER ARRANGEMENT

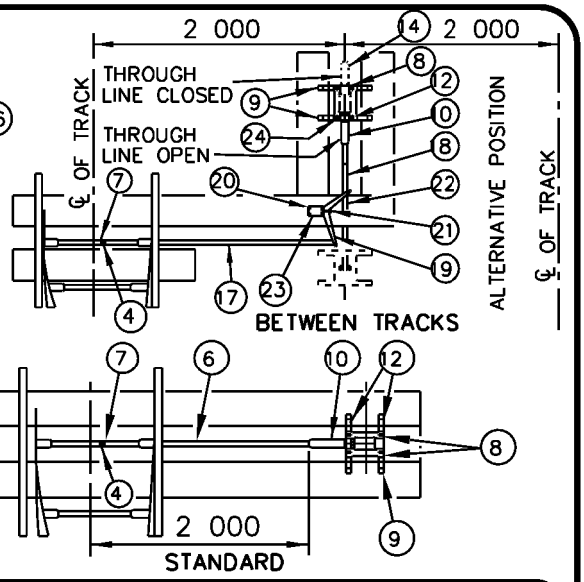

REMARKS:
1. SEE CLAUSE 5.6.7.

ITEM No.	DESCRIPTION	NUMBER PER CASE				DRAWING
		1	2	3	4	
1	SADDLE	1	1	1	1	TYPE E – 3301
2	SADDLE PIN	1	1	1	1	
3	WASHER FOR ITEMS 2 AND 7	6	4	4	4	
4	SPLIT PIN FOR ITEMS 2 AND 7	6	4	4	4	
5	KICK–OVER LEVER	1	1	1	1	
6	PULL ROD (2 285mm LONG)	1	1	1	1	
7	PULL ROD PIN	4	2	2	2	
8	BOLT AND LOCK NUT FOR ITEM 12	4	4	4	4	
9	COACH SCREW TYPE B	4	4	4	4	TYPE E – 239M
10	COUNTERWEIGHT	1	1	1	1	TYPE E – 3301
11	COUNTERWEIGHT BOLT (SHORT)	–	1	1	1	
12	TUMBLER SUPPORT STRAP	2	2	2	2	
13	SPLIT PIN FOR ITEM 15	1	1	1	1	
14	COUNTERWEIGHT ARM	1	1	1	1	
15	KICK–OVER LEVER PIN	1	1	1	1	
16	WASHER FOR ITEM 15	1	1	1	1	
17	PULL ROD (1 475mm LONG)	1	–	–	–	
18	PULL ROD (915 mm LONG)	1	–	–	–	
19	BELL CRANK	1	–	–	–	
20	BELL CRANK SHOE	1	–	–	–	CSEM 51–1–1/4
21	BELL CRANK SHOE PIN	1	–	–	–	
22	SPLIT PIN FOR ITEM 21	1	–	–	–	
23	BOLT (Ø16mm X 180mm LONG) & NUT	4	–	–	–	–
24	INDICATOR PLATE	1	–	–	–	TYPE E – 3301
25	COUNTERWEIGHT BOLT FOR ITEM 24	2	–	–	–	
26	LONG BRIDLE	1	1	–	1	TYPE E – 3157
27	SHORT BRIDLE	–	–	–	1	
28	POINTS LOCK WITH CHAIN	–	–	–	1	TYPE E – 3093
29	BRIDGE	2	1	2	1	TYPE E – 3178
30	SADDLE FOR LONG BRIDGE	–	1	1	1	TYPE E – 3177
31	PATRICK LOCK (R H)	1	1	1	–	CSEM 411
32	PATRICK LOCK (L H)	–	–	1	–	CSEM 412

CASE 1 TURNOUT PROVIDED WITH POINTS INDICATOR, PATRICK LOCK AND LONG BRIDLE.
CASE 2 TURNOUT PROVIDED WITH PATRICK LOCK AND LONG BRIDLE (NO INDICATOR).
CASE 3 TURNOUT AT DETECTOR–LOCKED STATION PROVIDED WITH RIGHT–HAND AND LEFT–HAND PATRICK OR CHUBB LOCKS.
CASE 4 TURNOUT PROVIDED WITH PADLOCK AND LONG BRIDLE.

TUMBLER WITH STIFF COUNTER – WEIGHT ARM

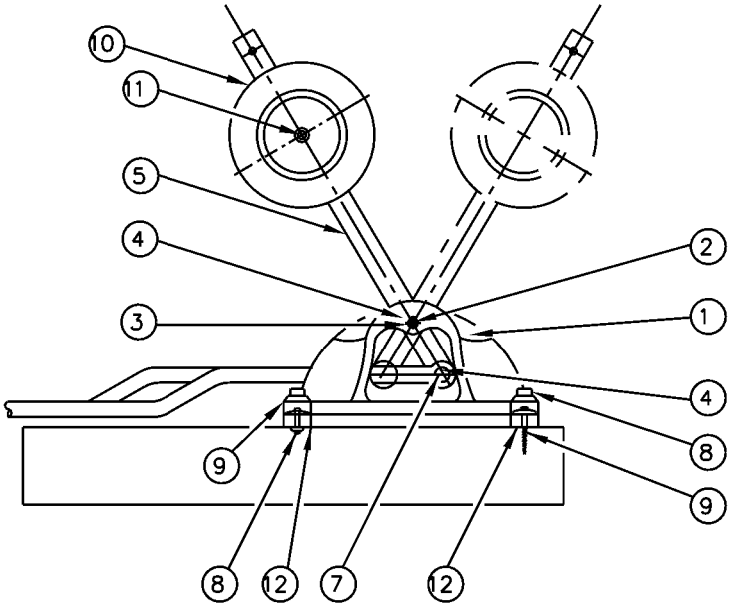

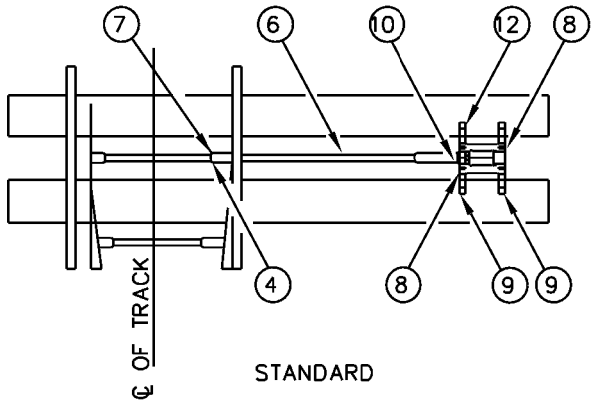

STANDARD

TUMBLER ARRANGEMENT

REMARKS:
1. SEE CLAUSE 5.6.7.

ITEM No.	DESCRIPTION	NUMBER OFF	DRAWING TYPE
1	SADDLE	1	E – 3287
2	SADDLE PIN	1	
3	WASHER FOR ITEM 2	2	
4	SPLIT PIN FOR ITEMS 2 AND 7	4	
5	KICK–OVER LEVER	1	
6	PULL ROD (2 285mm LONG)	1	
7	PULL–ROD PIN	2	
8	BOLT AND LOCK NUT FOR ITEM 12	4	
9	COACH SCREW TYPE B	4	E – 239M
10	COUNTERWEIGHT	1	E – 3287
11	COUNTERWEIGHT BOLT (SHORT)	1	E – 3287
12	TUMBLER SUPPORT STRAP	2	E – 3287

TUMBLER (COUNTERSUNK) FOR HARBOURS

ANNEXURE 27
SHEET 3 of 4

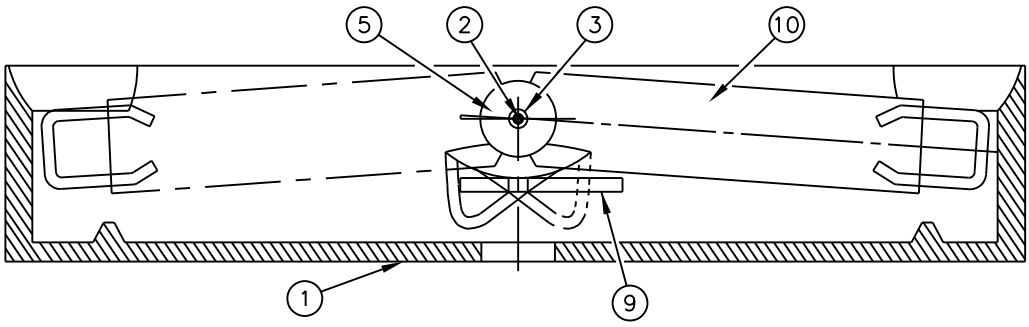

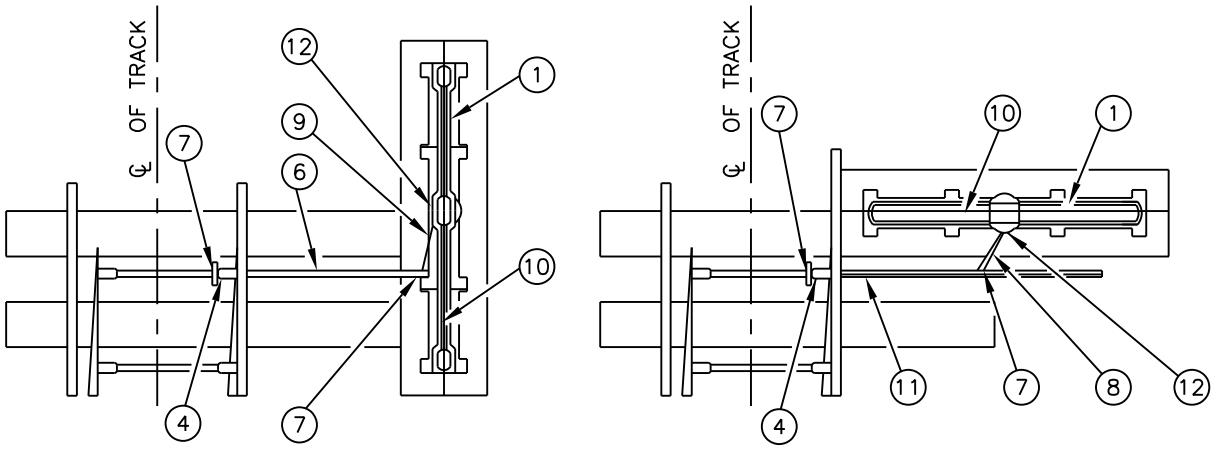

BETWEEN TRACKS ALTERNATIVE

TUMBLER ARRANGEMENTS

REMARKS:
1. SEE CLAUSE 5.6.7.

ITEM No.	DESCRIPTION	NUMBER OFF	DRAWING TYPE
1	SADDLE	1	E – 3138
2	SADDLE PIN	1	
3	WASHER FOR ITEMS 2, 7 AND 12	4	
4	SPLIT PIN FOR ITEMS 2, 7 AND 12	3	
5	KICK–OVER LEVER	1	
6	PULL ROD (915mm LONG)	1	E – 3301
7	PULL ROD PIN	2	E – 3138
8	SPECIAL CRANK	1	
9	CRANK	1	
10	COUNTERWEIGHT	1	
11	PULL ROD (1 475mm LONG)	1	E – 3301
12	CRANK PIN	1	E – 3138

TUMBLER (STOKSTYF) WITH SPRING LOADED LINKING MECHANISM

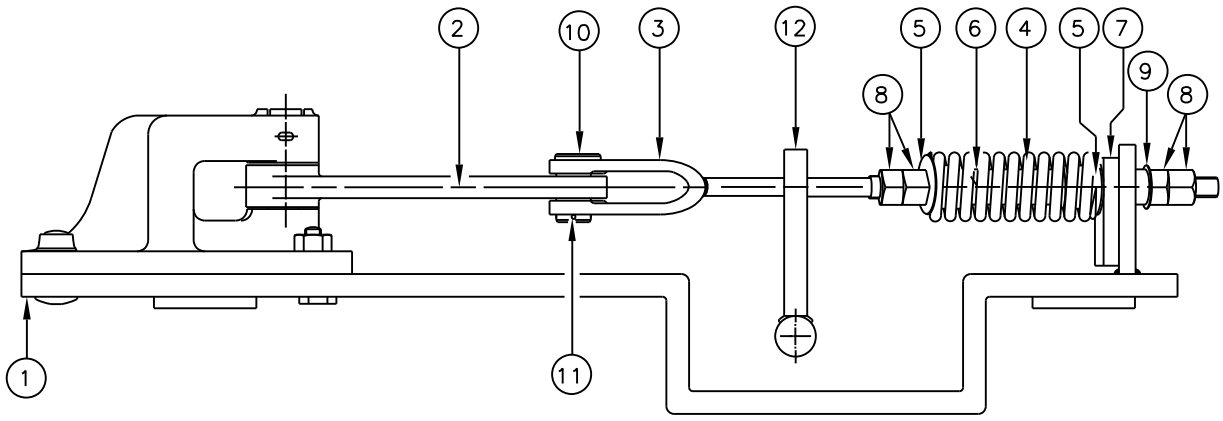

ASSEMBLY

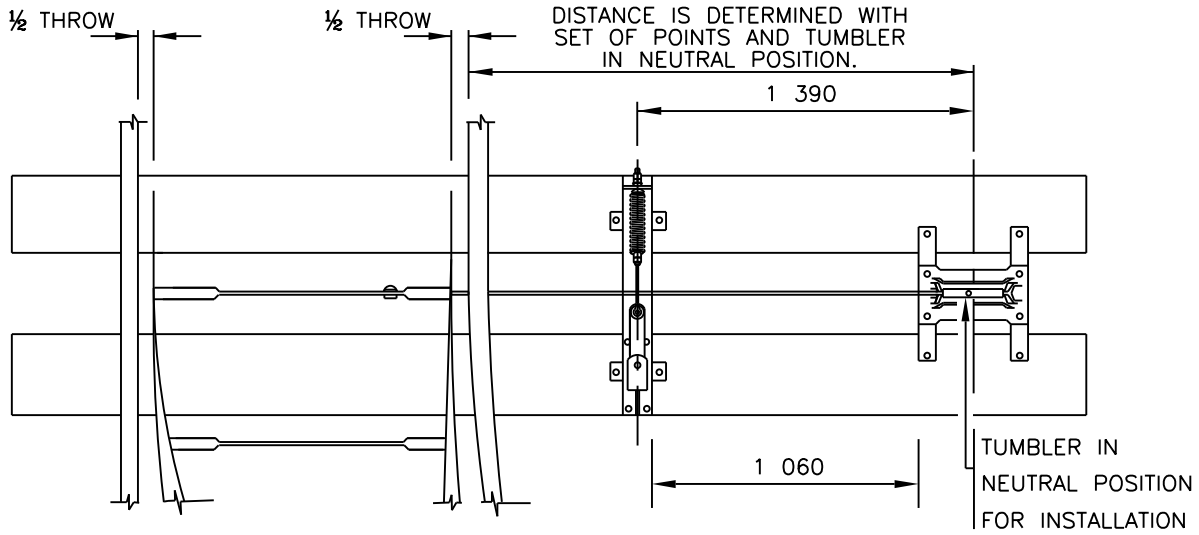

POSITION OF "STOKSTYF" SPRING LOADED LINKING MECHANISM

ITEM No.	DESCRIPTION	QUANTITIES	DRG. No. TYPE	STORES ITEM No.
1	BASE PLATE ASSEMBLY	1	E-3364 SHT 2-007	–
2	CRANK ARM	1	E-3364 SHT 2-004	–
3	PUSH ROD ASSEMBLY	1	E-3364 SHT 2-005	–
4	COMPRESSION SPRING	1	E-3364 SHT 3-002	–
5	SPRING CENTRALIZER	2	E-3364 SHT 3-001	–
6	PUSH ROD SLEEVE	1	E-3364 SHT 3-004	–
7	SWIVEL	1	E-3364 SHT 3-003	–
8	M24 NUT	4	–	01/015 552
9	M24 WASHER	1	–	01/007 275
10	CENTRE PIN	1	CSE M5629	59/009 566
11	SPLIT PIN	1	–	01/010 181
12	PULL ROD ASSEMBLY	1	E-3364 SHT 3-005	–

CUSHION STOP BLOCK / SLIDING TYPE

ANNEXURE 28
SHEET 1 of 1

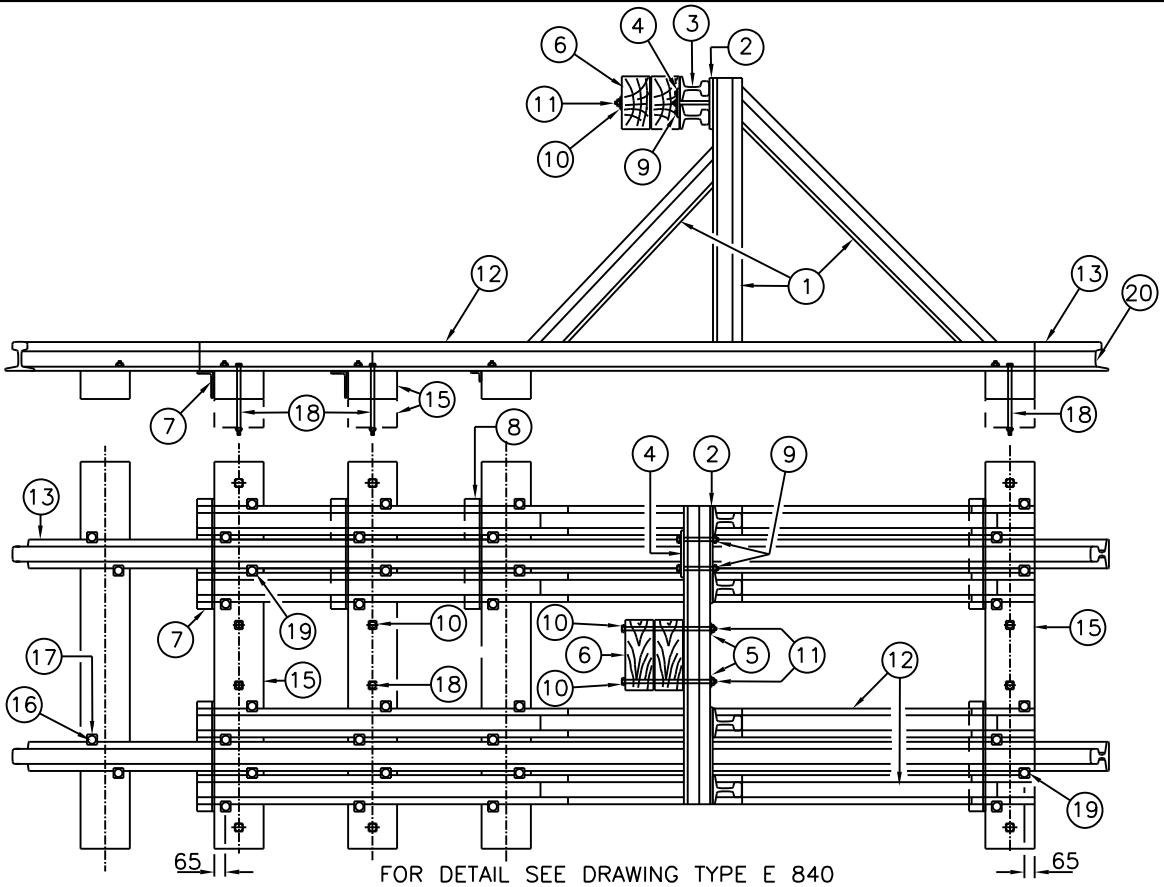

ITEM	DESCRIPTION	ITEM	DESCRIPTION
1	STRUT (ASSEMBLY)	11	BOLT AND NUT (M24, 455mm LONG)
2	STRUT GUSSET PLATE	12	STRUT FOOT
3	BUFFER BEAM (ASSEMBLY)	13	TRACK
4	LOCK PLATE	14	CUSHION STOP BLOCK (ASSEMBLY OF ITEMS 1–12)
5	BACK PLATE	15	WOODEN SLEEPER (2,1m LONG)
6	BUMPER BLOCK (WOOD)	16	COACH SCREW B
7	ANGLE IRON	17	COACH–SCREW WASHER
8	ANGLE IRON	18	BOLT AND NUT FOR SLEEPER
9	BOLT AND NUT (M24, 200mm LONG)	19	FASTENING PLATE F1
10	WASHERS FOR DRAWING ITEMS NO's 11 & 18	20	END OF STOP BLOCK

REMARKS:

1. CUSHION STOP BLOCK IS SUPPLIED COMPLETE WITH ITEMS 14, 17, AND 19. ITEMS 15 AND 16 TO BE SUPPLIED FROM OWN STOCK.
2. IN YARDS WHERE HEAVY SHUNTING OCCURS AND WHERE CUSHION STOP BLOCKS ARE IN THE VICINITY OF BUILDINGS OR NEAR BOUNDARIES, ITEM 18 AND ADDITIONAL QUANTITIES OF ITEM 10 MUST BE ORDERED. ADDITIONAL SLEEPERS, ITEM 15, TO BE PROVIDED IN POSITIONS SHOWN IN DOTTED LINES.
3. HEAVY SHUNTING:
   - A. GRADIENT – STEEPER THAN 1:100
   - B. SPEED – FASTER THAN WALKING PACE
   - C. DENSITY – HIGH DENSITY (ALL DAY)
   - D. POOR BALLAST – ASH, SOIL, GRAVEL, ETC.

   } DEPOT ENGINEER TO DECIDE
4. AFTER EACH COLLISION, THE CUSHION STOP BLOCK IS TO BE MOVED TO THE NORMAL POSITION, INSPECTED FOR DEFECTS AND REPAIRED IF NECESSARY.

FENCING

REPAIRS TO AND LENGTHENING OF EXISTING FENCES	
TYPE OF FENCE	REFERENCE DRAWING TYPE
8 – WIRE FENCE	I – 41 OR I – 45 SHT 1

ERECTION OF NEW FENCES	
TYPE OF FENCE	REFERENCE DRAWING TYPE
6 – WIRE LARGE STOCK FENCE	I – 45
8 – WIRE SMALL STOCK FENCE	I – 45

GATES	
GATES FOR	REFERENCE DRAWING TYPE
6 AND 8 – WIRE FENCING	I – 45 SHT 2

GENERAL	
DESCRIPTION	REFERENCE DRAWING TYPE
FENCING AT LAND BEACONS	I – 45
FENCING ALONG CURVED BOUNDARIES	I – 45
FENCING OF ENCLOSED AREAS	I – 45

FENCING

ANNEXURE 29
SHEET 2 of 3

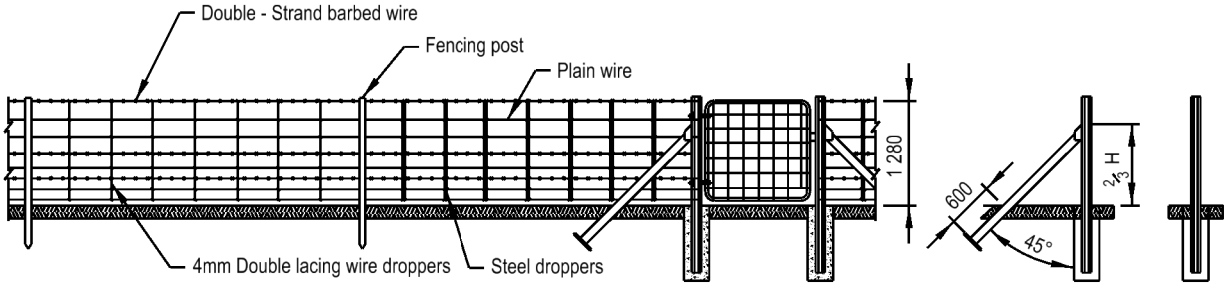

8 WIRE FENCE

STRAINING POST

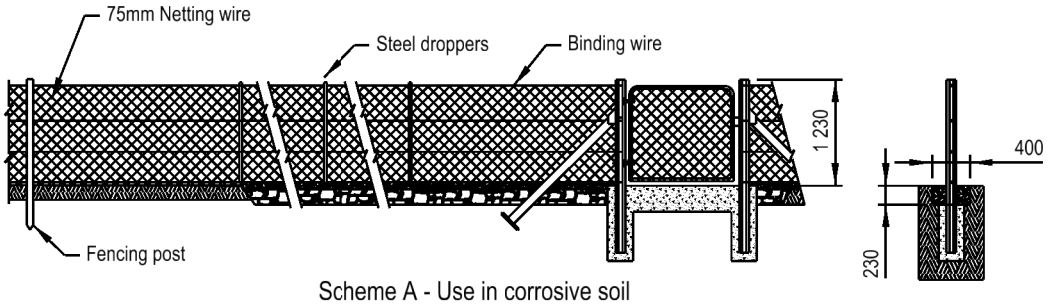

Scheme A - Use in corrosive soil

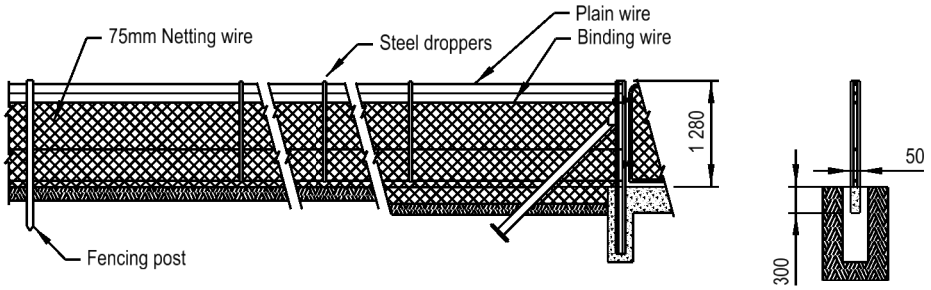

Scheme B - Use in non-corrosive soil

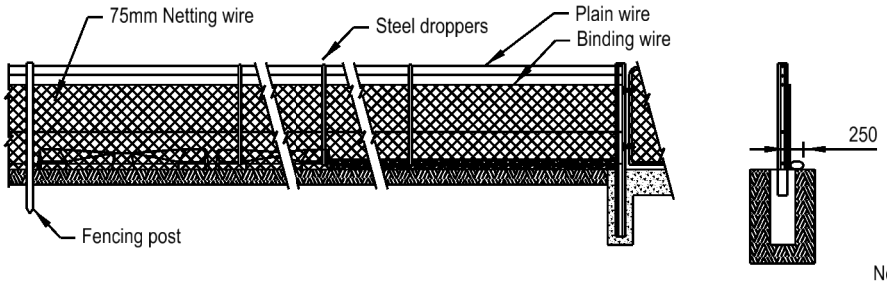

Scheme C - For hard ground where A & B are unsuitable

Note:
For futher detail
see CCE TYPE I-41

JACKAL - PROOF FENCE

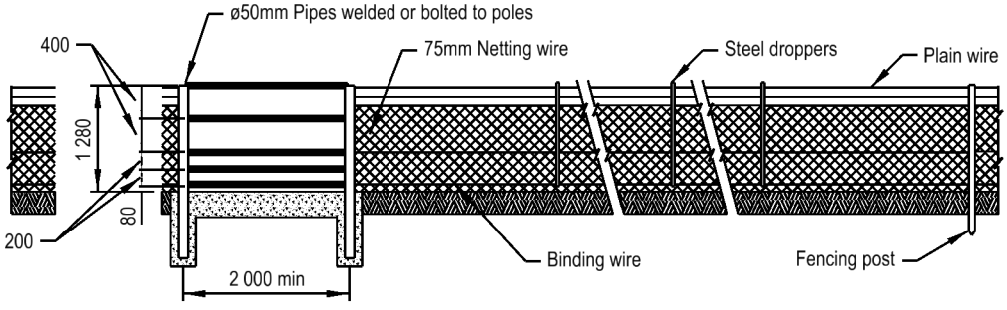

THOROUGHFARE FOR PEDESTRIANS

FENCING AT TRANSNET BOUNDARIES AND LAND BEACONS

ANNEXURE 29
SHEET 3 of 3

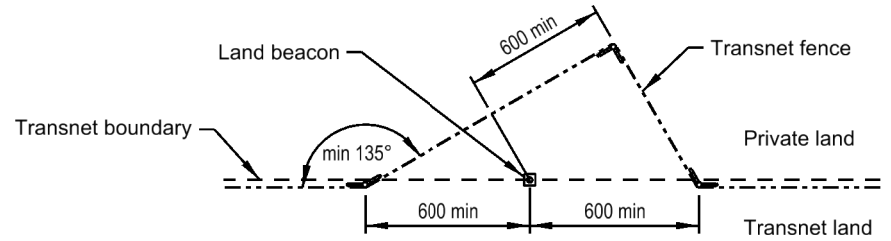

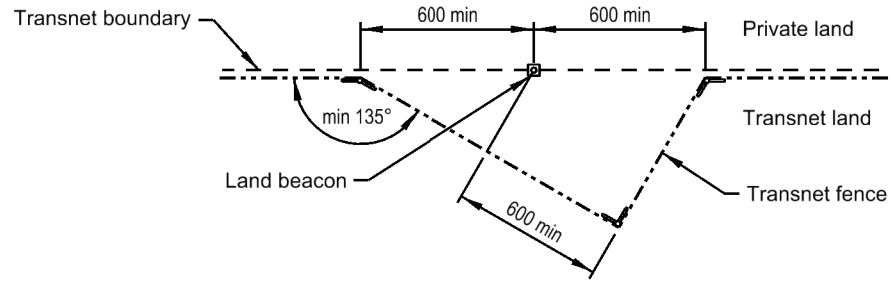

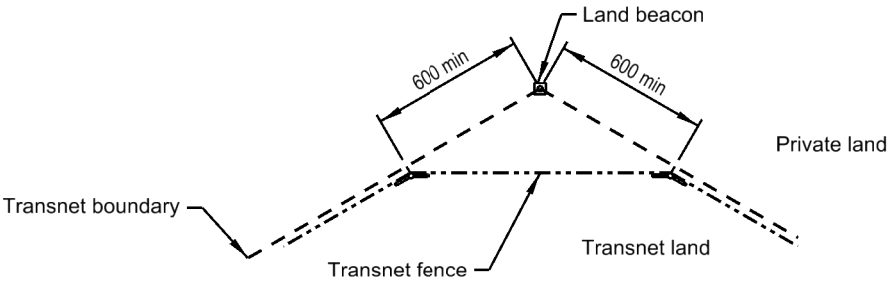

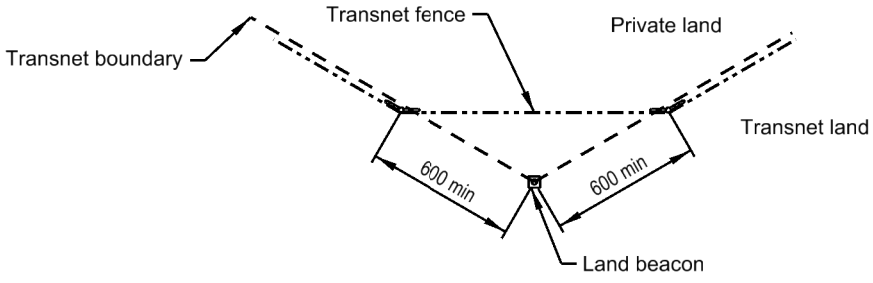

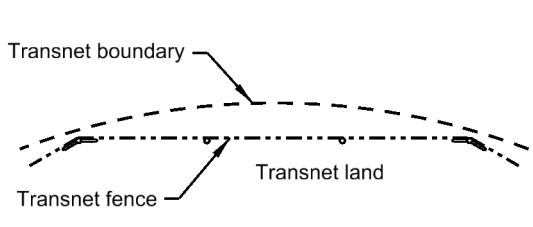

Fence along curved boundary

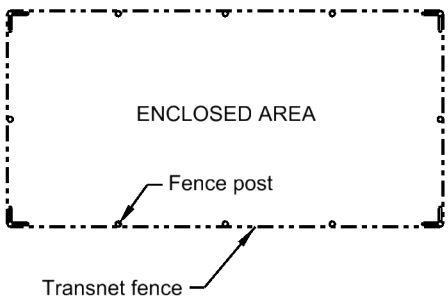

SLEEPER DETAIL : GENERAL

SLEEPER	TYPE	LENGTH (mm)	WIDTH (mm)	HEIGHT (mm)	MASS (kg)	REFERENCE DRAWING
P2	CONCRETE	2 057	254	230	215	E-3303 SH 1
PY	CONCRETE	2 200	300	232	278	E-3318 SH 1
F4	CONCRETE	2 057	254	244	215	E-3303 SH 2
FY	CONCRETE	2 200	300	258	282	E-3318 SH 2
WOOD	LAMINATED	2 100	250	195	72	————
WOOD	LAMINATED	2 400	250	195	82	————
WOOD	LAMINATED	2 700	250	195	92	————
WOOD	LAMINATED	3 000	250	195	102	————
WOOD	LAMINATED	3 400	250	195	116	————
WOOD	LAMINATED	3 800	250	195	130	————
WOOD	LAMINATED	4 200	250	195	143	————
WOOD	LAMINATED	6 000	250	195	205	————
STEEL	————	2 060	260	87	63	E-3277
UNIVERSAL	CONCRETE	2 100	200			————
WOOD	HARD	2 100		150		————

SLEEPER DETAIL :
48kg 1:12 TURNOUT :
CONCRETE SLEEPERS

SLEEPER NUMBER	USED ON TURNOUT (MARK)	MASS (kg)	LENGTH (mm)	SLEEPER NUMBER	USED ON TURNOUT (MARK)	MASS (kg)	LENGTH (mm)
1P	1 (LH & RH)	334	2 225	19PL	1 (LH)	385	2 565
2P	1 (LH & RH)	430	2 870	19PR	1 (RH)	386	2 570
3PL	1 (LH)	430	2 870	20PL	1 (LH)	390	2 600
3PR	1 (RH)	430	2 870	20PR	1 (RH)	390	2 600
4PL	1 (LH)	337	2 250	21PL	1 (LH)	395	2 635
4PR	1 (RH)	337	2 250	21PR	1 (RH)	395	2 635
5PL	1 (LH)	339	2 260	22PL	1 (LH)	401	2 670
5PR	1 (RH)	339	2 260	22PR	1 (RH)	401	2 670
6PL	1 (LH)	341	2 275	23PL	1 (LH)	406	2 705
6PR	1 (RH)	341	2 275	23PR	1 (RH)	406	2 705
7PL	1 (LH)	344	2 290	24PL	1 (LH)	411	2 740
7PR	1 (RH)	344	2 290	24PR	1 (RH)	412	2 745
8PL	1 (LH)	346	2 310	25PL	1 (LH)	418	2 780
8PR	1 (RH)	346	2 310	25PR	1 (RH)	418	2 785
9PL	1 (LH)	349	2 325	26PL	1 (LH)	423	2 820
9PR	1 (RH)	349	2 325	26PR	1 (RH)	424	2 825
10PL	1 (LH)	352	2 345	27PL	1 (LH)	430	2 865
10PR	1 (RH)	352	2 345	27PR	1 (RH)	430	2 865
11PL	1 (LH)	355	2 365	28PL	1 (LH)	436	2 905
11PR	1 (RH)	355	2 365	28PR	1 (RH)	436	2 910
12PL	1 (LH)	358	2 385	29PL	1 (LH)	443	2 950
12PR	1 (RH)	358	2 385	29PR	1 (RH)	443	2 950
13PL	1 (LH)	361	2 410	30PL	1 (LH)	449	2 995
13PR	1 (RH)	361	2 410	30PR	1 (RH)	449	2 995
14PL	1 (LH)	365	2 435	31PL	1 (LH)	456	3 040
14PR	1 (RH)	365	2 435	31PR	1 (RH)	456	3 040
15PL	1 (LH)	369	2 460	32PL	1 (LH)	462	3 080
15PR	1 (RH)	369	2 460	32PR	1 (RH)	462	3 080
16PL	1 (LH)	373	2 485	33PL	1 (LH)	469	3 125
16PR	1 (RH)	373	2 485	33PR	1 (RH)	469	3 125
17PL	1 (LH)	376	2 505	34PL	1 (LH)	476	3 170
17PR	1 (RH)	377	2 510	34PR	1 (RH)	476	3 170
18PL	1 (LH)	380	2 535	35PL	1 (LH)	483	3 220
18PR	1 (RH)	380	2 535	35PR	1 (RH)	483	3 220

REMARKS:
1. FOR REMARKS SEE ANNEXURE 30 SHEET 3

SLEEPER DETAIL : 48kg 1:12 TURNOUT : CONCRETE SLEEPERS

SLEEPER NUMBER	USED ON TURNOUT (MARK)	MASS (kg)	LENGTH (mm)	SLEEPER NUMBER	USED ON TURNOUT (MARK)	MASS (kg)	LENGTH (mm)
36PL	1 (LH)	491	3 270	44PL	1 (LH)	546	3 640
36PR	1 (RH)	491	3 270	44PR	1 (RH)	546	3 640
37PL	1 (LH)	498	3 320	45PL	1 (LH)	555	3 695
37PR	1 (RH)	498	3 320	45PR	1 (RH)	555	3 695
38PL	1 (LH)	505	3 365	46PL	1 (LH)	563	3 750
38PR	1 (RH)	505	3 365	46PR	1 (RH)	563	3 750
39PL	1 (LH)	512	3 410	47PL	1 (LH)	570	3 800
39PR	1 (RH)	512	3 410	47PR	1 (RH)	570	3 800
40PL	1 (LH)	519	3 460	48PL	1 (LH)	578	3 855
40PR	1 (RH)	519	3 460	48PR	1 (RH)	578	3 855
41PL	1 (LH)	526	3 505	49P	1 (LH & RH)	587	3 910
41PR	1 (RH)	526	3 505	50P	1 (LH & RH)	594	3 960
42PL	1 (LH)	533	3 550	51P	1 (LH & RH)	602	4 015
42PR	1 (RH)	533	3 550	52P	1 (LH & RH)	611	4 070
43PL	1 (LH)	539	3 595	53P	1 (LH & RH)	619	4 125
43PR	1 (RH)	539	3 595	54P	1 (LH & RH)	274	1 825

REMARKS:
1. FOR TURNOUT CLASSIFICATION (TURNOUT MARK) SEE THE PERMANENT WAY MATERIAL MANUAL PART 1.
2. WIDTH OF SLEEPER = 250mm.
   HEIGHT OF SLEEPER = 250mm.

SLEEPER DETAIL : S-60 / UIC-60 1:12 TURNOUT : CONCRETE SLEEPERS

SLEEPER NUMBER	USED ON TURNOUT (MARK)	MASS (kg)	LENGTH (mm)	SLEEPER NUMBER	USED ON TURNOUT (MARK)	MASS (kg)	LENGTH (mm)
1	2, 3(a,b,c,d,e), 4	334	2 225	12F	4	368	2 455
2	2	431	2 870	12P	3, 3a, 3b, 3c, 3d, 3e	358	2 385
2F	4	431	2 870	13	2	361	2 405
2P	3, 3a, 3b, 3d	431	2 870	13F	4	368	2 455
2PH	3c, 3e	431	2 870	13P	3, 3a, 3b, 3c, 3d, 3e	361	2 405
3	2	431	2 870	14	2	365	2 430
3F	4	431	2 870	14F	4	368	2 455
3P	3, 3a, 3b, 3d, 3e	431	2 870	14P	3, 3a, 3b, 3c, 3d, 3e	365	2 430
3PH	3c	431	2 870	15	2	368	2 455
4	2	337	2 245	15F	4	368	2 455
4F	4	351	2 340	15P	3, 3a, 3b, 3c, 3d, 3e	368	2 455
4P	3, 3a, 3b, 3c, 3d, 3e	337	2 245	16	2, 3(a,b,d,e), 4	372	2 480
5	2	339	2 260	16PH	3c	372	2 480
5F	4	351	2 340	17	2, 3(a,b,c,d,e), 4	376	2 505
5P	3, 3a, 3b, 3c, 3d, 3e	339	2 260	18	2, 3(a,b,c,d,e), 4	380	2 535
6	2	341	2 275	19	2, 3(a,b,c,d,e), 4	385	2 565
6F	4	351	2 340	20	2, 3(a,b,c,d,e), 4	389	2 595
6P	3, 3a, 3b, 3c, 3d, 3e	341	2 275	21	2, 3(a,b,c,d,e), 4	395	2 630
7	2	344	2 290	22	2, 3(a,b,c,d,e), 4	400	2 665
7F	4	351	2 340	23	2, 3(a,b,c,d,e), 4	405	2 700
7P	3, 3a, 3b, 3c, 3d, 3e	344	2 290	24	2, 3(a,b,c,d,e), 4	411	2 740
8	2	346	2 305	25	2, 3(a,b,c,d,e), 4	416	2 775
8F	4	351	2 340	26	2, 3(a,b,c,d,e), 4	423	2 820
8P	3, 3a, 3b, 3c, 3d, 3e	346	2 305	27	2, 3(a,b,c,d,e), 4	429	2 860
9	2	349	2 325	28	2, 3(a,b,c,d,e), 4	435	2 900
9F	4	351	2 340	29	2, 3(a,b,c,d,e), 4	442	2 945
9P	3, 3a, 3b, 3c, 3d, 3e	349	2 325	30	2, 3(a,b,c,d,e), 4	449	2 990
10	2	351	2 340	31	2, 3(a,b,c,d,e), 4	456	3 040
10F	4	351	2 340	32	2, 3(a,b,c,d,e), 4	462	3 080
10P	3, 3a, 3b, 3c, 3d, 3e	351	2 340	33	2, 3(a,b,c,d,e), 4	468	3 120
11	2	354	2 360	34	2, 3(a,b,c,d,e), 4	476	3 170
11F	4	368	2 455	35	2, 3(a,b,c,d,e), 4	482	3 215
11P	3, 3a, 3b, 3c, 3d, 3e	354	2 360	36	2, 3(a,b,c,d,e), 4	490	3 265
12	2	358	2 385	37	2, 3(a,b,c,d,e), 4	497	3 315

REMARKS:
1. FOR REMARKS SEE ANNEXURE 30 SHEET 5

SLEEPER DETAIL : S–60 / UIC–60 1:12 TURNOUT : CONCRETE SLEEPERS

SLEEPER NUMBER	USED ON TURNOUT (MARK)	MASS (kg)	LENGTH (mm)	SLEEPER NUMBER	USED ON TURNOUT (MARK)	MASS (kg)	LENGTH (mm)
38	2, 3(a,b,c,d,e), 4	504	3 360	47	2, 3(a,b,c,d,e), 4	570	3 800
39	2, 3(a,b,c,d,e), 4	511	3 405	48	2, 3(a,b,c,d,e), 4	578	3 855
40	2, 3(a,b,c,d,e), 4	518	3 455	49	2, 3(a,b,c,d,e), 4	587	3 910
41	2, 3(a,b,c,d,e), 4	526	3 505	50	2, 3(a,b,c,d,e), 4	595	3 965
42	2, 3(a,b,c,d,e), 4	532	3 545	51	2, 3(a,b,c,d,e), 4	602	4 015
43	2, 3(a,b,c,d,e), 4	539	3 590	52	2, 3(a,b,c,d,e), 4	611	4 070
44	2, 3(a,b,c,d,e), 4	546	3 640	53PH	3c	431	2 870
45	2, 3(a,b,c,d,e), 4	554	3 695	84	2, 3(a,b,c,d,e), 4	274	1 825
46	2, 3(a,b,c,d,e), 4	562	3 745				

REMARKS:
1. FOR TURNOUT CLASSIFICATION (TURNOUT MARK) SEE THE PERMANENT WAY MATERIAL MANUAL PART 1.
2. WIDTH OF SLEEPER = 250mm.
   HEIGHT OF SLEEPER = 250mm.
3. USED ON LEFT HAND AS WELL AS RIGHT HAND TURNOUTS.

SLEEPER DETAIL : S-60 / UIC-60 1:20 TURNOUT : CONCRETE SLEEPERS

SLEEPER NUMBER	USED ON TURNOUT (MARK)	MASS (kg)	LENGTH (mm)	SLEEPER NUMBER	USED ON TURNOUT (MARK)	MASS (kg)	LENGTH (mm)
1	2, 3a, 3b, 3c, 5	334	2 225	19	2	362	2 410
2	2	431	2 870	19P	3a, 3b, 3c	362	2 410
2P	3a, 3b, 3c	431	2 870	19P-1	5	362	2 410
2PH	5	431	2 870	20	2	363	2 420
3	2	431	2 870	20P	3a, 3b, 3c	363	2 420
3P	3a, 3b, 3c, 5	431	2 870	20P-1	5	363	2 420
4	2	336	2 240	21	2	366	2 440
4P	3a, 3b, 3c, 5	336	2 240	21P	3a, 3b, 3c	366	2 440
5	2	343	2 285	21P-1	5	366	2 440
5P	3a, 3b, 3c, 5	343	2 285	22	2	368	2 450
6	2	338	2 255	22P	3a, 3b, 3c	368	2 450
6P	3a, 3b, 3c, 5	338	2 255	22P-1	5	368	2 450
7	2	340	2 265	23	2, 3a, 3b, 3c, 5	370	2 465
7P	3a, 3b, 3c, 5	340	2 265	24	2, 3a, 3b, 3c, 5	372	2 480
8	2	350	2 335	25	2, 3a, 3b, 3c, 5	375	2 500
8P	3a, 3b, 3c, 5	350	2 335	26	2, 3a, 3b, 3c, 5	377	2 515
9	2	343	2 285	27	2, 3a, 3b, 3c, 5	380	2 530
9P	3a, 3b, 3c, 5	343	2 285	28	2, 3a, 3b, 3c, 5	383	2 550
10	2	392	2 610	29	2, 3a, 3b, 3c, 5	386	2 570
10P	3a, 3b, 3c, 5	392	2 610	30	2, 3a, 3b, 3c, 5	389	2 590
11	2	566	3 770	31	2, 3a, 3b, 3c, 5	391	2 605
11P	3a, 3b, 3c, 5	566	3 770	32	2, 3a, 3b, 3c, 5	394	2 625
12	2	348	2 320	33	2, 3a, 3b, 3c, 5	397	2 645
12P	3a, 3b, 3c, 5	348	2 320	34	2, 3a, 3b, 3c, 5	401	2 670
13	2	350	2 330	35	2, 3a, 3b, 3c, 5	404	2 690
13P	3a, 3b, 3c, 5	350	2 330	36	2, 3a, 3b, 3c, 5	407	2 710
14	2	351	2 340	37	2, 3a, 3b, 3c, 5	410	2 730
14P	3a, 3b, 3c, 5	351	2 340	38	2, 3a, 3b, 3c, 5	413	2 755
15	2	354	2 360	39	2, 3a, 3b, 3c, 5	416	2 775
15P	3a, 3b, 3c, 5	354	2 360	40	2, 3a, 3b, 3c, 5	420	2 800
16	2	356	2 370	41	2, 3a, 3b, 3c, 5	424	2 825
16P	3a, 3b, 3c, 5	356	2 370	42	2, 3a, 3b, 3c, 5	428	2 850
17	2	357	2 380	43	2, 3a, 3b, 3c, 5	431	2 870
17P	3a, 3b, 3c, 5	357	2 380	44	2, 3a, 3b, 3c, 5	434	2 895
18	2	359	2 390	45	2, 3a, 3b, 3c, 5	438	2 920
18P	3a, 3b, 3c	359	2 390	46	2, 3a, 3b, 3c, 5	442	2 945
18P-1	5	359	2 390	47	2, 3a, 3b, 3c, 5	446	2 970

REMARKS:
1. FOR REMARKS SEE ANNEXURE 30 SHEET 7

SLEEPER DETAIL : S-60 / UIC-60 1:20 TURNOUT : CONCRETE SLEEPERS

SLEEPER NUMBER	USED ON TURNOUT (MARK)	MASS (kg)	LENGTH (mm)	SLEEPER NUMBER	USED ON TURNOUT (MARK)	MASS (kg)	LENGTH (mm)
48	2, 3a, 3b, 3c, 5	449	2 995	66	2	533	3 555
49	2, 3a, 3b, 3c, 5	454	3 025	66P	3a, 3b, 3c, 5	533	3 555
50	2, 3a, 3b, 3c, 5	458	3 050	67	2	539	3 590
51	2, 3a, 3b, 3c, 5	461	3 075	67P	3a, 3b, 3c, 5	539	3 590
52	2, 3a, 3b, 3c, 5	467	3 110	68	2	542	3 615
53	2, 3a, 3b, 3c, 5	471	3 140	68P-LH	3a, 3b, 3c, 5 (LH)	542	3 615
54	2, 3a, 3b, 3c, 5	476	3 175	68P-RH	3a, 3b, 3c, 5 (RH)	542	3 615
55	2, 3a, 3b, 3c, 5	481	3 205	69	2	547	3 645
56	2	486	3 240	69P-LH	3a, 3b, 3c, 5 (LH)	547	3 645
56P	3a, 3b, 3c, 5	486	3 240	69P-RH	3a, 3b, 3c, 5 (RH)	547	3 645
57	2	587	3 915	70	2	551	3 670
57P	3a, 3b, 3c, 5	587	3 915	70P-LH	3a, 3b, 3c, 5 (LH)	551	3 670
58	2	587	3 915	70P-RH	3a, 3b, 3c, 5 (RH)	551	3 670
58P	3a, 3b, 3c, 5	587	3 915	71	2, 3a, 3b, 3c, 5	556	3 705
59	2	498	3 320	72	2, 3a, 3b, 3c, 5	560	3 735
59P	3a, 3b, 3c, 5	498	3 320	73	2, 3a, 3b, 3c, 5	566	3 770
60	2	503	3 350	74	2, 3a, 3b, 3c, 5	570	3 800
60P	3a, 3b, 3c, 5	503	3 350	75	2, 3a, 3b, 3c, 5	575	3 835
61	2	507	3 380	76	2, 3a, 3b, 3c, 5	580	3 865
61P	3a, 3b, 3c, 5	507	3 380	77	2, 3a, 3b, 3c, 5	585	3 900
62	2	513	3 420	78	2, 3a, 3b, 3c, 5	590	3 930
62P	3a, 3b, 3c, 5	513	3 420	79	2, 3a, 3b, 3c, 5	596	3 965
63	2	518	3 450	80	2, 3a, 3b, 3c, 5	600	3 995
63P	3a, 3b, 3c, 5	518	3 450	81	2, 3a, 3b, 3c, 5	605	4 030
64	2	523	3 485	82	2, 3a, 3b, 3c, 5	610	4 060
64P	3a, 3b, 3c, 5	523	3 485	83	2, 3a, 3b, 3c, 5	615	4 095
65	2	528	3 520	84	2, 3a, 3b, 3c, 5	274	1 825
65P	3a, 3b, 3c, 5	528	3 520				

REMARKS:

1. FOR TURNOUT CLASSIFICATION (TURNOUT MARK) SEE THE PERMANENT WAY MATERIAL MANUAL PART 1.
   MARK 2 = UNIQUE NOS 60209495(LH) AND 60209496(RH).
   MARK 3a = UNIQUE NOS 60209497(LH) AND 60209498(RH).
2. WIDTH OF SLEEPER = 250mm.
   HEIGHT OF SLEEPER = 250mm.
3. USED ON LEFT HAND AS WELL AS RIGHT HAND TURNOUTS, EXCEPT WHERE SHOWN DIFFERENTLY.

TRANSNET

delivering on our commitment *to you* freight rail

INFRASTRUCTURE ENGINEERING

TRACK WELDING MANUAL

BBB8341 Version 5

Authors:	Chief Engineering Technician Track Maintenance Transnet Freight Rail	MA Kgabi	
	Principal Engineer Wheelset & Materials Technology Transnet Freight Rail	K.C. Mistry	
Approved:	Principal Engineer Track Technology Transnet Freight Rail	J.S. Maree	
	Principal Engineer Track Transnet Freight Rail	MA Marutla	
Authorized:	Chief Engineer Infrastructure Engineering Transnet Freight Rail	JHP Van Aardt	

Date March 2011

Circulation restricted to:

This manual supersedes all earlier versions.

© This document as a whole is protected by copyright. The information herein is the sole property of Transnet Ltd. It may not be used, disclosed or reproduced in part or in whole in any manner whatsoever, except with the written permission of and in a manner permitted by the proprietors.

TABLE OF CONTENTS

PAGE

1 CHAPTER 1 – INTRODUCTION. 1-1

1.1 TRACK WELDING MANUAL (2007). 1-1
1.2 RELEVANT RULES, REGULATIONS, GUIDELINES AND INSTRUCTIONS. 1-1
1.3 TRAINING AND ASSESSMENT OF TRACK WELDERS. 1-1
1.4 IN-SERVICE TRAINING. 1-2
1.5 CONTRACTORS. 1-2
1.6 FIELD SHEETS. 1-3

2 CHAPTER 2 – SAFETY ASPECTS WITH REGARD TO TRACK WELDING. 2-1

2.1 TRAIN OPERATING SAFETY INSTRUCTIONS FOR PERMANENT WAY WELDING. 2-1
2.2 PROTECTION OF TRAINS AND SAFEGUARDING OF PERSONNEL. 2-1
2.3 TEMPORARY SPEED RESTRICTIONS. 2-1
2.4 PERSONAL PROTECTIVE EQUIPMENT. 2-1
2.5 SAFE WORKING PROCEDURES. 2-2
2.6 FIRE PREVENTION. 2-3
2.7 SAFE HANDLING AND USE OF GAS EQUIPMENT. 2-7
2.8 REPAIRING PROCEDURE FOR KICK-OUTS. 2-14

3 CHAPTER 3 – TOOLS AND EQUIPMENT. 3-1

3.1 HAND TOOLS. 3-1
3.2 MARKING TOOLS. 3-2
3.3 MEASURING AND TESTING EQUIPMENT. 3-3
3.4 WELDING EQUIPMENT. 3-4
3.5 WIRE FEEDING MACHINE FOR FLUX-CORED WIRE. 3-6
3.6 ARC-AIR GOUGING. 3-7
3.7 GAS WELDING EQUIPMENT: ASSEMBLY AND IGNITING METHOD. 3-8
3.8 GAS CUTTING EQUIPMENT: ASSEMBLY AND IGNITING METHOD. 3-12

4 CHAPTER 4 – METALLURGICAL GUIDELINES AND TESTS. 4-1

4.1 METALLURGICAL GUIDELINES. 4-1
4.2 METALLURGICAL TESTS. 4-10
4.3 CHARACTERISTICS OF RAILS. 4-20
4.4 FLAME CUTTING. 4-20
4.5 GRINDING. 4-20
4.6 DISC CUTTING. 4-21
4.7 PRE- AND POST HEATING. 4-21
4.8 DEFECTS. 4-21
4.9 ELECTRODES. 4-21
4.10 FLUX-CORED WIRE. 4-22

5 CHAPTER 5 – PRE- AND POST HEATING. 5-1

5.1 GENERAL. 5-1
5.2 PREHEATING WITH OXY-PROPANE. 5-1
5.3 PREHEATING WITH PREHEATING COMPOUND. 5-3
5.4 PREHEATING WITH A PETROL-AIR UNIT. 5-6
5.5 POST-HEAT TREATMENT (RETARDED COOLING) USING OXY-PROPANE. 5-6
5.6 PREHEATING AND POST HEATING IN EXOTHERMIC CASTING. 5-7

6 CHAPTER 6 – PREVENTATIVE GRINDING. 6-1

6.1 GENERAL. 6-1
6.2 GRINDING AND CUTTING EQUIPMENT. 6-1
6.3 GRINDING OF CROSSINGS. 6-1
6.4 RAIL ENDS AND INSULATED RAIL JOINTS. 6-3
6.5 STANDARDS AND TOLERANCES. 6-3

7 CHAPTER 7 – REPAIRING WHEEL-SPIN BURNS. 7-1

7.1 GENERAL. 7-1
7.2 INSPECTION AND DECISION-MAKING. 7-1
7.3 PROTECTION. 7-2
7.4 FIRE PREVENTION. 7-2
7.5 PREPARATION. 7-2
7.6 GRINDING PROCESSES. 7-3
7.7 PREHEATING. 7-3

7.8 HEATING POWDER PROCESS. 7-4
7.9 WELDING PROCESSES. 7-5
7.10 RETARDED COOLING (POST HEATING). 7-6
7.11 ROUGH GRINDING AND FINAL GRINDING. 7-6
7.12 STANDARDS AND TOLERANCES. 7-7

8 CHAPTER 8 – REPAIRING BATTERED RAIL ENDS. 8-1

8.1 GENERAL. 8-1
8.2 INSPECTION AND DECISIONS MAKING. 8-1
8.3 PROTECTION. 8-3
8.4 SAFE WORKING PROCEDURES. 8-3
8.5 PREPARATION. 8-3
8.6 GRINDING PROCESS. 8-5
8.7 PREHEATING. 8-6
8.8 WELDING PROCESSES. 8-6
8.9 RETARDED COOLING (POST HEATING). 8-8
8.10 ROUGH GRINDING. 8-8
8.11 CUTTING EXPANSION GAPS. 8-8
8.12 FINAL GRINDING. 8-9
8.13 STANDARDS AND TOLERANCES. 8-9

9 CHAPTER 9 – REPAIRING DIPPED HEAT-AFFECTED ZONES ON FLASH BUTT JOINTS. . 9-1

9.1 GENERAL. 9-1
9.2 INSPECTIONS AND DECISION MAKING. 9-1
9.3 STANDARDS AND TOLERANCES. 9-1

10 CHAPTER 10 – REPAIRING SWITCH BLADES. 10-1

10.1 GENERAL. 10-1
10.2 INSPECTION AND DECISION MAKING ON HINGED SWITCH BLADES. 10-1
10.3 PROTECTION. 10-2
10.4 FIRE-PREVENTION. 10-3
10.5 PREPARATION. 10-3
10.6 GRINDING PROCESS. 10-4
10.7 PREHEATING. 10-4
10.8 WELDING PROCESS. 10-4
10.9 FINAL GRINDING. 10-5
10.10 STANDARDS AND TOLERANCES. 10-6

11 CHAPTER 11 – EXOTHERMIC CASTING OF RAILS (SKV-PROCESS). 11-1

11.1 GENERAL. 11-1
11.2 INSPECTION AND DECISION MAKING. 11-2
11.3 PROTECTION OF TRAINS AND SAFEGUARDING OF PERSONNEL. 11-3
11.4 SAFE WORKING PROCEDURES. 11-3
11.5 PREPARATION. 11-3
11.6 EXOTHERMIC CASTING EQUIPMENT. 11-5
11.7 COMPOSITION OF AN EXOTHERMIC CASTING PORTION. 11-6
11.8 TYPES OF EXOTHERMIC CASTING PROCESSES. 11-6
11.9 HEAD HARDENED RAILS. 11-7
11.10 COLOUR CODING TO PRODUCTS FOR EASY IDENTIFICATION. 11-8
11.11 THE EXOTHERMIC CASTING PROCESS. 11-9
11.12 MOUNTING AND SEALING THE MOULDS. 11-9
11.13 SETTING UP AND LOADING THE CRUCIBLE. 11-10
11.14 GAS PREHEATING. 11-11
11.15 PETROL/AIR PREHEATING OPERATING INSTRUCTIONS. 11-12
11.16 CASTING PROCESS. 11-12
11.17 SHEARING OF THE EXOTHERMIC JOINT. 11-13
11.18 FINISHING. 11-13
11.19 RECTIFICATION. 11-14
11.20 FINAL GRINDING. 11-14
11.21 MARKING OF EXOTHERMIC JOINTS. 11-14
11.22 INSPECTION OF EXOTHERMIC JOINTS. 11-15
11.23 STANDARDS AND TOLERANCES. 11-15
11.24 EXOTHERMIC PROCESSES WITH UNIQUE STANDARDS AND PARAMETERS. 11-16
11.25 EXOTHERMIC CASTING OF RAILS: 24 TO 26MM GAP (SKV-F). 11-16
11.26 EXOTHERMIC CASTING: 35-40MM GAP (SKV-M) AND 40-50MM GAP (SKV-L). 11-18
11.27 EXOTHERMIC CASTING OF COMPOSITE JOINTS 24-26MM GAP (SKV-F). 11-19
11.28 EXOTHERMIC CASTING OF TURNOUT SETS 24-26MM GAP (SKV-F). 11-21
11.29 EXOTHERMIC CASTING ON CONCRETE SLABS. 11-22

11.30 EXOTHERMIC CASTING OF CRANE RAILS WITH 24-26MM GAPS (SKS). 11-24

12 CHAPTER 12 – REPAIRING RAIL-MANUFACTURED CROSSINGS. 12-1

12.1 GENERAL. 12-1
12.2 DEFINITIONS AND METHODS OF MEASUREMENT. 12-1
12.3 INSPECTION, DECISION MAKING AND PLANNING. 12-5
12.4 PROTECTION OF TRAINS AND THE SAFEGUARDING OF PERSONNEL. 12-5
12.5 SAFE WORKING PROCEDURE. 12-5
12.6 PREPARATION. 12-5
12.7 PREHEATING. 12-7
12.8 WELDING PROCESSES. 12-8
12.9 FINAL GRINDING. 12-9
12.10 STANDARDS AND TOLERANCES. 12-11

13 CHAPTER 13 – REPAIRING 14% CAST MANGANESE (MONOBLOCK) CROSSINGS. ... 13-1

13.1 GENERAL 13-1
13.2 DEFINITIONS AND METHODS OF MEASUREMENT. 13-1
13.3 INSPECTION AND DECISIONMAKING. 13-2
13.4 ELECTRODES AND FLUX-CORED WIRE. 13-4
13.5 WELDING REPAIRS DONE IN TRACK. 13-4
13.6 WELDING REPAIRS DONE IN A WORKSHOP. 13-9

14 CHAPTER 14 – REPAIRING RAIL-BOUND CROSSINGS 14-1

14.1 GENERAL. 14-1
14.2 DEFINITIONS AND METHODS OF MEASUREMENT. 14-1
14.3 INSPECTION, DECISION MAKING AND PLANNING. 14-3
14.4 ELECTRODES AND FLUX-CORED WIRE. 14-4
14.5 WELDING REPAIRS DONE IN TRACK. 14-4
14.6 WELDING REPAIRS DONE IN A WORKSHOP. 14-9

ANNEXURES

LIST OF TABLES

PAGE

Table 2.1. Safety Equipment. 2-2
Table 5.1. Recommended preheat temperatures for the different rail types. 5-2
Table 11.1. Prescribed rail gaps. 11-4
Table 11.2. Composition of an exothermic casting portion. 11-6
Table 11.3. Portion types and cooling treatment for HH rails. 11-7
Table 11.4. Parameters for Exothermic casting using Oxy/LP gas preheating method. 11-17
Table 11.5. Parameters for Exothermic casting using Petrol/air preheating method. 11-18
Table 11.6. Rail height difference limits. 11-20
Table 12.1. Position of point P depending on crown wear H. 12-3
Table 13.1. Crossing wear and repair actions. 13-3

LIST OF FIGURES

PAGE

Figure 3.1. Neutral Flame. 3-11
Figure 3.2. Carburising Flame. 3-11
Figure 3.3. Oxidising Flame. 3-11
Figure 4.1. Iron/Carbon Phase Diagram. 4-4
Figure 4.2. Continuous Cooling Transformation (CCT) Diagram for UIC-B Rail. 4-4
Figure 4.3. Pearlite (Note difference in grain size). 4-5
Figure 4.4. Bainite. 4-5
Figure 4.5. Martensite. 4-5
Figure 4.6. Time/Temperature Transformation (TTT) Diagram. 4-6
Figure 4.7. Cross Section of Exothermic Joint. 4-7
Figure 4.8. Typical Pearlite Microstructure. 4-8
Figure 4.9. HAZ Microstructure and Hardness Values of a Flash Butt Joint. 4-9
Figure 4.10. Different positions of the source or X-ray tube to radiograph joints. 4-13
Figure 4.11. Rail Flange X-ray Setup. 4-14
Figure 4.12. Rail Web X-Ray Setup. 4-14
Figure 4.13. Setup of Isotope to Radiograph the Rail Web. 4-15
Figure 4.14. Lack of Fusion in the Rail Flange. 4-16
Figure 4.15. Worm holing in the Rail Web. 4-16
Figure 4.16. Defect Orientation. 4-17
Figure 4.17. Ultrasonic Test Trolley. 4-18
Figure 4.18. Different Transducer Types in the Wheel Probes. 4-19
Figure 4.19. Wheel Probes on the Ultrasonic Measurement Car (UMC). 4-19
Figure 5.1. Position of Clinker Former. 5-4
Figure 5.2. Position of Heating Blocks 5-5
Figure 7.1. Oxy-Propane Preheating Area. 7-4
Figure 7.2. Rail Lifting Setup. 7-4
Figure 7.3. Staggered welding method for wheel-spin burns (except for semi-automatic welding processes). 7-6
Figure 8.1. Typical battered rail ends. 8-1
Figure 8.2. Measuring for mismatches. 8-2
Figure 8.3. Identification of dips on battered rail ends. 8-3
Figure 8.4. Measuring welding area on battered rail ends. 8-5
Figure 8.5. Preheating area. 8-6
Figure 8.6. Staggered welding method for battered rail ends (except for semi-automatic welding processes). 8-7
Figure 8.7. Cutting of expansion gaps. 8-9
Figure 8.8. Tolerances for battered rail end repairs. 8-9
Figure 9.1. Schematic representation of a dipped flash butt joint. 9-1
Figure 10.1. General layout of a set of points. 10-2
Figure 10.2. Preheating of defective area. 10-4
Figure 10.3. Final grinding of switch blade. 10-5
Figure 11.1. Example of joint marking. 11-15
Figure 12.1. Crown Wear H. 12-2
Figure 12.2. Location of Points E, D and F. 12-4

Figure 12.3. Welding method. 12-9
Figure 12.4. Indication of Distances M and L. 12-10
Figure 13.1. Staggered method. 13-7
Figure 14.1. Facing Direction. 14-9

CHANGE LIST			
REVISION NUMBER	**DESCRIPTION OF CHANGE**	**PAGE**	**DATE OF CHANGE**
08/07/001	"April 2000" replaced by "latest edition" – Paragraph 1.5.1	1-2	2-Jul-08
08/07/002	"Spoornet" replaced by "Transnet Freight Rail" – Paragraph 4.2.1	4-10	2-Jul-08
08/07/003	Figure 4.18 – angle of coverage of 70o probe on cross section - widened.	4-19	Not complete
	4.3.1 "The main alloying element in rails is carbon" replaced by "The main alloying elements in rail steel are carbon, manganese and silicon"	4-20	26-Jan-11
08/07/004	Add "(powder/blocks)" after "compound" second bullet paragraph 5.1.3	5-1	2-Jul-08
08/07/005	"powder kit" replaced by "compound" heading 5.3	5-3	2-Jul-08
	Paragraph 5.3. Numbering changed due to addition of preheating blocks paragraph. Paragraph 5.3.1 is now preheating powder and 5.3.2 is preheating blocks. The entire 5.3.2 is added. Some changes were made to powder as shown below.	5-3 to 5-5	
	5.3.1 – "charging" replaced by "loading"	5-3	
	5.3.2 – "compound" replaced by "powder"	5-4	
	5.3.2.1 – "Light the starter block by placing the igniter in the igniting hole to start the preheating process" replaced by "Start the preheating process by lighting the four starter blocks using igniters"	5-4	
	5.3.2.2 – "compound" replaced by "powder"	5-4	
	5.3.3.1 – "may" replaced by "must"	5-5	
	5.3.3.2 – "As soon as practically possible" deleted	5-5	
	5.2.3 – "A double head stainless steel tip tube with two 2H preheating nozzles is sufficient, as it will ensure even heat on both sides of the rail (wheel-spin burns and bettered rail ends" replaced by "For wheel-spin burns and battered rail ends, a double-head stainless steel tip tube with two 2H preheating nozzles must be used. For crossings, a 900mm stainless steel tip tube with a 3H heating nozzle must be used".	5-1	

	7.12.3 – "The following details shall be stamped with 6mm stencils on the field side of the crown at the welded area: • Company name, e.g. S = Spoornet, M = Metrorail, T = Transnet Projects (previously Protekon), C = Contractor, etc. • The depot will allocate a code letter to the Track Welder, e.g. D • The day, month and last two digits of the year. • Sequence number of the wheel-spin burn (beginning at zero at the beginning of each financial year). • All daily work performed shall be logged on the prescribed field sheet (Annexure 1-8)." Replaced by "The following details shall be written with yellow chalk (sufficient to remain visible for at least 3 months) on the rail web adjacent the welded area: • Sequence number of the wheel-spin burn, beginning at zero at the beginning of each financial year for each Transnet Freight Rail welder, and beginning at zero at the beginning of each day for each contractor welding team. • Welder code (Transnet Freight Rail welders and contractor welders). Transnet projects' welders will be allocated codes starting with PR and sub-contractors' welders will be allocated codes starting with C. • Date welded (Transnet Freight Rail welders and contractor welders). • All daily work performed shall be logged on the prescribed field sheet, Annexure 1-8 for Transnet	7-7	

	Freight Rail welders and approved field sheets for Transnet Projects welders and sub-contractors.		
	7.12.4 – “superintendent” replaced by “superintendent/supervisor”	7-7	
	8.13.3 – “The following details shall be stamped with 6mm stencils on the field side of the crown at the welded area: • Company name, e.g. S = Spoornet, M = Metrorail, T = Transnet Projects (previously Protekon), C = Contractor, etc. • The depot will allocate a code letter to the Track Welder, e.g. D • The day, month and last two digits of the year. • Sequence number of the wheel-spin burn (beginning at zero at the beginning of each financial year). • All daily work performed shall be logged on the prescribed field sheet (Annexure 1-8).” Replaced by “The following details shall be written with yellow chalk (sufficient to remain visible for at least 3 months) on the rail web adjacent the welded area: • Sequence number of the battered rail end, beginning at zero at the beginning of each financial year for each Transnet Freight Rail welder, and beginning at zero at the beginning of each day for each contractor welding team. • Welder code (Transnet Freight Rail welders and contractor welders). Transnet projects’ welders will be allocated codes starting with PR and sub-contractors’ welders will be allocated codes starting with C. • Date welded (Transnet Freight	8-10	

	Rail welders and contractor welders). • All daily work performed shall be logged on the prescribed field sheet, Annexure 1-8 for Transnet Freight Rail welders and approved field sheets for Transnet Projects welders and sub-contractors.		
	8.13.4 – "superintendent" replaced by "superintendent/supervisor"	8-10	
	8.2.5 – "Mismatches are caused when rails with different heights of up to 3mm (height difference) are inserted. Battered rail ends can be repaired by welding up the lower rail end 1.5mm and grinding down the higher rail end 1.5mm over a length of 1m." replaced by "Battered rails ends at fishplated joints with height differences of up to 6mm on yard lines (as classified in the SAP system) with speed restrictions of up to 30km/h may be repaired by welding and grinding as opposed to installing closure rails. For yard lines the repair process shall be as follows. The higher rail shall be grinded down gradually to 1.5mm over a length of 250mm and the lower rail shall be welded up gradually to match the higher rail (max 4.5mm) over a length of 750mm, which will render a gradual incline of maximum 6mm over a length of 1m. The relevant maximum height difference limit for main lines and station lines is 3mm. For main lines and station lines the repair process shall be as follows. The higher rail shall be grinded down gradually to 1.5mm over a length of 250mm and the lower rail shall be welded up gradually to match the higher rail (max 1.5mm) over a length of at 750mm, which will render a gradual incline of maximum 3mm over a length of 1m."	8-2	
	9.3.3 – "The following details shall be stamped with 6mm stencils on the field side of the crown at the welded area: • Company name, e.g. S = Spoornet, M = Metrorail, T = Transnet Projects (previously Protekon), C = Contractor, etc. • The depot will allocate a code letter to the Track Welder, e.g. D	9-2	

	• The day, month and last two digits of the year. • Sequence number of the wheel-spin burn (beginning at zero at the beginning of each financial year). • All daily work performed shall be logged on the prescribed field sheet (Annexure 1-8)." Replaced by "The following details shall be written with yellow chalk (sufficient to remain visible for at least 3 months) on the rail web adjacent the welded area: • Sequence number of the flash butt joint, beginning at zero at the beginning of each financial year for each Transnet Freight Rail welder, and beginning at zero at the beginning of each day for each contractor welding team. • Welder code (Transnet Freight Rail welders and contractor welders). Transnet projects' welders will be allocated codes starting with PR and sub-contractors' welders will be allocated codes starting with C. • Date welded (Transnet Freight Rail welders and contractor welders). • All daily work performed shall be logged on the prescribed field sheet, Annexure 1-8 for Transnet Freight Rail welders and approved field sheets for Transnet Projects welders and sub-contractors.		
	9.3.4 – "superintendent" replaced by "superintendent/supervisor"	9-2	
	11.21.1 – "An example of a Track Welders code is SD210906, and has the following meaning: Company name, e.g. S = Spoornet, M = Metrorail, T = Transnet	11-14 to 11-15	

	Projects (previously Protekon), C = Contractor, etc" Replaced by "An example of stencilled detail is shown in Figure11.1, and has the following meaning: Company name (not applicable to Transnet Freight Rail), e.g. M = Metrorail, PR = Transnet Projects (previously Protekon), C = Contractor, etc"		
	11.21.1 – "Joint number e.g. Start with number 1, 2, etc, at the beginning of each financial year." Replaced by "Joint number e.g. Start with number 1, 2, etc, at the beginning of each financial year (1st April)."	11-15	
	11.21.1 – "The Depot will allocate a code letter (except C, I, L, O, M, P and R) to the Track Welder (E.g. D)." replaced "The Depot will allocate a code letter for the Track Welder (E.g. D).	11-15	
	11.21.1 – "8mm" replaced " "6mm"	11-14	
	11.10 – colour coding table replaced with new version received 29-Oct-2007.	11-8 to 11-9	
	Cause and effect examples as annexure to chapter 11.		Not complete
	Figure 11.1 replace SD with PR1		Not complete
	Annexure 12-3 – replace 470 with 5mm crown wear = 470mm.		Not complete
	Annexure 12-4 – add 5mm crown wear.		Not complete
	New chapter 16 for scissors, diamonds, single – and double slips (1:6/7/8/10).		To be drafted before next review.
	New chapter 15 for 1:20 crossings		To be drafted before next review.
	13.5 – Add "When welding is done in track, all welding repair work must be done under total track occupation. Subsequent grinding work can be done under normal occupations. The Maintenance Manager must decide whether it is economical to remove the crossing and perform the repairs in a workshop – taking into account the total occupation requirement."		

10/10/001	7.12.3 – "The following details shall be written with yellow chalk (sufficient to remain visible for at least 3 months) on the rail web adjacent the welded area: • Sequence number of the wheel-spin burn, beginning at zero at the beginning of each financial year for each Transnet Freight Rail welder, and beginning at zero at the beginning of each day for each contractor welding team. • Welder code (Transnet Freight Rail welders and contractor welders). Transnet Capital Projects' welders will be allocated codes starting with PR and sub-contractors' welders will be allocated codes starting with C. • Date welded (Transnet Freight Rail welders and contractor welders). • All daily work performed shall be logged on the prescribed field sheet, Annexure 1-8 for Transnet Freight Rail welders and approved field sheets for Transnet Projects welders and sub-contractors." Replaced by "The following details shall be written with yellow chalk (sufficient to remain visible for at least 3 months) on the rail web adjacent the welded area: • Sequence number of the wheel-spin burn, beginning at zero at the beginning of each financial year for each Transnet Freight Rail welder, and beginning at zero at the beginning of each day for each contractor welding team. • Welder code (Transnet Freight Rail welders and contractor welders). Transnet Capital Projects' welders will be allocated codes starting with PR	7-7	21-Oct-10

	and sub-contractors' welders will be allocated codes starting with C. • Date welded (Transnet Freight Rail welders and contractor welders). • All daily work performed shall be logged on the prescribed field sheet, Annexure 1-8 for Transnet Freight Rail welders and approved field sheets for Transnet Capital Projects welders and sub-contractors."		
10/10/002	8.13.3 – "The following details shall be written with yellow chalk (sufficient to remain visible for at least 3 months) on the rail web adjacent the welded area: • Sequence number of the battered rail ends, beginning at zero at the beginning of each financial year for each Transnet Freight Rail welder, and beginning at zero at the beginning of each day for each contractor welding team. • Welder code (Transnet Freight Rail welders and contractor welders). Transnet projects' welders will be allocated codes starting with PR and sub-contractors' welders will be allocated codes starting with C. • Date welded (Transnet Freight Rail welders and contractor welders). • All daily work performed shall be logged on the prescribed field sheet, Annexure 1-8 for Transnet Freight Rail welders and approved field sheets for Transnet Projects welders and sub-contractors." Replaced by "The following details shall be written with yellow chalk (sufficient to remain visible for at least 3 months) on the rail web adjacent the welded area: • Sequence number of the battered rail ends, beginning at zero at the	8-10	21-Oct-10

	beginning of each financial year for each Transnet Freight Rail welder, and beginning at zero at the beginning of each day for each contractor welding team. • Welder code (Transnet Freight Rail welders and contractor welders). Transnet Capital Projects' welders will be allocated codes starting with PR and sub-contractors' welders will be allocated codes starting with C. • Date welded (Transnet Freight Rail welders and contractor welders). • All daily work performed shall be logged on the prescribed field sheet, Annexure 1-8 for Transnet Freight Rail welders and approved field sheets for Transnet Capital Projects welders and sub-contractors."		
10/10/003	9.3.3 – "The following details shall be written with yellow chalk (sufficient to remain visible for at least 3 months) on the rail web adjacent the welded area: • Sequence number of the flash butt joint, beginning at zero at the beginning of each financial year for each Transnet Freight Rail welder, and beginning at zero at the beginning of each day for each contractor welding team. • Welder code (Transnet Freight Rail welders and contractor welders). Transnet projects' welders will be allocated codes starting with PR and sub-contractors' welders will be allocated codes starting with C. • Date welded (Transnet Freight Rail welders and contractor welders). • All daily work performed shall be	9-2	21-Oct-10

	logged on the prescribed field sheet, Annexure 1-8 for Transnet Freight Rail welders and approved field sheets for Transnet Projects welders and sub-contractors." Replaced by "The following details shall be written with yellow chalk (sufficient to remain visible for at least 3 months) on the rail web adjacent the welded area: • Sequence number of the flash butt joint, beginning at zero at the beginning of each financial year for each Transnet Freight Rail welder, and beginning at zero at the beginning of each day for each contractor welding team. • Welder code (Transnet Freight Rail welders and contractor welders). Transnet Capital Projects' welders will be allocated codes starting with PR and sub-contractors' welders will be allocated codes starting with C. • Date welded (Transnet Freight Rail welders and contractor welders). • All daily work performed shall be logged on the prescribed field sheet, Annexure 1-8 for Transnet Freight Rail welders and approved field sheets for Transnet Capital Projects welders and sub-contractors."		
10/10/004	11.21.1 – "The following details shall be stamped with 8mm stencils on the field side of the rail crown in proximity of the joint: • An example of stencilled detail is shown in Figure11.1, and has the following meaning: o Company name (not applicable to Transnet Freight Rail), e.g. M =	11-14	21-Oct-10

	Metrorail, PR = Transnet Projects (previously Protekon), C = Contractor, etc, o The Depot will allocate a code letter (except C, I, L, O, M, P and R) to the Track Welder (E.g. D). o The day, month and last two digits of the year. (DDMMYY). o Joint number e.g. Start with number 1, 2, etc, at the beginning of each financial year (1st April)." Replaced by "The following details shall be stamped with 8mm stencils on the field side of the rail crown in proximity of the joint: • An example of stencilled detail is shown in Figure11.1, and has the following meaning: o Company name (not applicable to Transnet Freight Rail), e.g. M = Metrorail, PR = Transnet Capital Projects (previously Protekon), C = Contractor, etc, o The Depot will allocate a code letter (except C, I, L, O, M, P and R) to the Track Welder (E.g. D). o The day, month and last two digits of the year. (DDMMYY). o Joint number e.g. Start with number 1, 2, etc, at the beginning of each work day."		
10/10/005	2.6.2.26 – "Fire Investigation teams shall: • Under no circumstances accept responsibility on behalf of Spoornet, as this may lead to differences between Spoornet and the Insurers. • After the fire has occurred, no work shall be done on the firebreak, until the Claims Examiner has completed his investigation."	2-7	21-Oct-10

	Replaced by "Fire Investigation teams shall: • Under no circumstances accept responsibility on behalf of Transnet Freight Rail, as this may lead to differences between Transnet Freight Rail and the Insurers. • After the fire has occurred, no work shall be done on the firebreak, until the Claims Examiner has completed his investigation."		
10/10/006	13.4.1 – "Only electrodes and flux-cored wire, which have been tested and approved by Spoornet Rail Technology, shall be used (Annexure 4-2)." Replaced by " Only electrodes and flux-cored wire, which have been tested and approved by Transnet Freight Rail (Rail Technology), shall be used (Annexure 4-2)."	13-4	21-Oct-10
10/10/007	14.4.1 – "Only electrodes and flux-cored wire, which have been tested and approved by Spoornet Rail Technology, shall be used (Annexure 4-2)." Replaced by "Only electrodes and flux-cored wire, which have been tested and approved by Transnet Freight Rail (Rail Technology), shall be used (Annexure 4-2)."	14-4	21-Oct-10
10/10/008	14.3.4 – "Condition assessment of rail-bound crossings shall be carried out at least once a year. The following measuring equipment applies: • Feeler/Taper gauge. • Crossing contour gauge (Annexure 3-1). • 1m straightedge. • Depth gauge." Replaced by "Condition assessment of rail-bound crossings shall be carried out at least once a year. The following measuring equipment applies: • Feeler/Taper gauge, and two	14-3	01-Nov-10

	1mm and two 2mm shims. • Crossing contour gauge (Annexure 3-1). • 1m straightedge. • Depth gauge.”		
10/10/009	14.5.7.7 – “Place the convex side of the 1:20 contour gauge, transversely at point P to determine the extent of metal to be removed on the wings. Grind proportionally away on left and right wings until contour gauge touches both wings and nose. This height shall be maintained over a distance of 300mm (between point G and the PI) for 1:12 turnouts, and 230mm (between point G and the PI) for 1:9 turnouts as indicated in blue (Annexures 14-1 and 14.2).” Replaced by “Place the convex side of the 1:20 contour gauge, transversely at point P to determine the extent of metal to be removed on the wings. Grind proportionally away on left and right wings until contour gauge touches both wings and nose. This height shall be maintained over a distance of 300mm (between point G and the PI) for 1:12 turnouts, and 230mm (between point G and the PI) for 1:9 turnouts as indicated in blue (Annexures 14-1 and 14.2). To assist grinding measurements, a 500mm straight edge can be used between point G and the PI.”	14-8	01-Nov-10
10/10/010	Fig 11.1 Remove COMPANY NAME and letter S standing for company name.		01-Nov-10
10/10/011	Annexure 4-2 • Add line to separate battered ends and battered ends 14% manganese crossing • Add ESAB Tubrodur KO 15.42 in type of filling metal for rail manufactured crossing		01-Nov-10
10/10/012	Annexure 14-1 move point D line to cover the 200mm distance		01-Nov-10
10/10/013	Annexure 14-2 • Move point D line to cover the 200mm distance		01-Nov-10

	• Replace 1:9 with 1:12 on heading		

Amendments compiled by: Anna Kgabi

Acknowledgement: I want to thank the following persons who assisted in compiling this manual: Dewald Potgieter, Adam Brand, Gert du Plessis, Theuns Erasmus, Keith Glover, Gerrit Jansen, Anna Kgabi, Ryno Kotze, Theuns Kuhn, MC Liebenberg, Charles Lloyd, Kanak Mistry, Nkgothatse Rakale, Marcel Rautenbach, Gert Strydom, Bart Zaayman and Salomon I. Grobler

CHAPTER 1 – INTRODUCTION.

1.1 TRACK WELDING MANUAL (2007).

1.1.1 This Manual is issued as guidance for track welding, is to be used by Track Welding Personnel and supersedes the “Specifications for Track Welding” and “Spesifikasies vir Spoorbaan Sweiswerk” issued in 1996.

1.1.2 Track Welding Personnel shall know and act according to these guidelines. This Manual shall be updated with amendments issued from time to time.

1.2 RELEVANT RULES, REGULATIONS, GUIDELINES AND INSTRUCTIONS.

1.2.1 All Track Welding Personnel must be in possession of, or have access to the following publications and all instructions and amendments thereto, and must know the contents thereof, and act in accordance therewith:

- Manual for Track Maintenance (2000).
- Spoornet Train Working Rules.
- Spoornet General Appendix No. 6 (Part 1).
- Safety Instructions: Electrical High-tension Equipment (Part 1).
- Safety guidelines for Infrastructure (April 2000).
- Road Rail Vehicle (RRV) Welding Manual.

1.2.2 Employees issued with these instructions are responsible for keeping it up to date by including the latest amendments thereto.

1.3 TRAINING AND ASSESSMENT OF TRACK WELDERS.

1.3.1 The term “Track Welder” used in this manual includes Welder (artisan), Trade Hand (level 4) and Trainee Track Welder.

1.3.2 Only Track Welders who have been assessed and certified competent by an accredited official or his authorized representative may work with welding equipment on rails.

1.3.3 Track Welders receive basic training in metallurgy, which is important for the correct heat treatment of rails.

1.3.4 Track Welders will only be allowed to perform types of track welding in which they have been trained, assessed and certified competent by an accredited official or his representative.

1.3.5 All Track Welders shall be re-evaluated on a regular basis on the following:

- Safe handling of gas equipment (at least once every second year).
- Operating disc cutting machines (at least once every second year).
- Repairing wheel-spin burns.
- Repairing battered rail ends.
- Casting exothermic joints on various rail profiles.
- Repairing Rail-manufactured crossings.
- Repairing Rail-bound crossings.
- Repairing 14% Cast Manganese (monoblock) crossings.
- Repairing Switch blades.
- Preventative grinding.

1.3.6 Corrective, on the job training shall be done when standards and tolerances are not met.

1.4 IN-SERVICE TRAINING.

1.4.1 In-service training is the training and re-training of Track Welders in all phases of track welding and safety issues in order for them to work independently.

1.4.2 All work completed by track welding personnel shall comply with the required quality standards. Should any non-conformance be noted, on-the-job training shall be given immediately.

1.5 CONTRACTORS.

1.5.1 All contractors shall comply with the Construction regulations of the Occupational Health and Safety Act (Act 85 of 1993) and Safety Guidelines for Infrastructure (latest edition).

1.5.2 All contract Track Welders, who have been assessed and certified competent by an appointed accredited official, or his authorized representative may be allowed to weld on track in those aspects of welding he/she was assessed.

1.5.3 All contractors' tools and equipment shall be inspected before any welding work on a new contract commences and shall conform to all safety requirements.

1.5.4 An authorized person (Track welding) shall inspect all welding work done by contractors. An inspection report shall be issued before payment may be authorized.

1.6 FIELD SHEETS.

1.6.1 Refer to Annexure 1-8.

CHAPTER 2 – SAFETY ASPECTS WITH REGARD TO TRACK WELDING.

2.1 TRAIN OPERATING SAFETY INSTRUCTIONS FOR PERMANENT WAY WELDING.

2.1.1 The Safety Instructions for Permanent Way Welding, as set out in Spoornet General Appendix No 6 (Part 1), shall be adhered to before and during welding operations.

2.2 PROTECTION OF TRAINS AND SAFEGUARDING OF PERSONNEL.

2.2.1 Protection of trains and safeguarding of employees shall be applied in accordance with Spoornet General Appendix No 6 (Part 1) and the Manual for Track Maintenance (2000).

2.2.2 The Track Welder shall ensure that his/her helpers are properly safeguarded before they enter the rail reserve.

2.2.3 Green area talks shall be conducted and recorded daily before work commences.

2.3 TEMPORARY SPEED RESTRICTIONS.

2.3.1 In cases where it becomes necessary owing to the type of work to reduce speed to 30km/h or less, it shall be done in accordance with the Spoornet General Appendix No 6 (Part 1).

2.3.2 A Track Inspector shall make the necessary arrangements when a temporary speed restriction is required. He/she shall ensure that the speed restriction is included in the weekly Temporary Speed Restriction Notice. The length of track, which is indicated in this Notice, shall be limited to minimize the influence on train services.

2.4 PERSONAL PROTECTIVE EQUIPMENT.

2.4.1 Track Welders and their helpers shall be issued with, wear, and keep in good condition, the necessary personal protective equipment when in proximity of the track.

2.4.2 Shields shall be used where possible to protect the public and other workers' eyes against open arc rays.

2.4.3 Personal protective equipment issued to any person shall be recorded.

2.4.4 The following approved personal protective equipment shall be worn when welding, grinding, cutting or pre- or post heating is done:

Table 2.1. Safety Equipment.

SAFETY EQUIPMENT	TRACK WELDER	HELPER
Safety goggles (Light and Dark)	X	X
Welders cap/bush hat	X	X
Leather gloves	X	X
Overall (Complete)	X	X
Safety boots	X	X
Leather apron	X	
Leggings (Spats)	X	X
Face shield	X	
Electronic welding helmet	X	
Ear protection equipment	X	X
High visibility vest	X	X

2.5 SAFE WORKING PROCEDURES.

2.5.1 Only persons, who were trained, assessed and certified competent, may be allowed to work with welding and grinding equipment.

2.5.2 Machines placed on or taken off track shall be switched off and placed in the locked position.

2.5.3 All hand tools shall be kept in a safe condition. A pedestal grinder shall be used to remove metal mushrooming.

2.5.4 All equipment shall be inspected and made safe, daily, before being used.

2.5.5 Grinding wheels and cutting discs shall not be contaminated with oil, grease, and diesel or clogged with steel deposits. Grinding wheels and cutting discs shall not be damaged, cracked or broken and shall be stored and transported in proper containers.

2.5.6 The rotating speed of the grinding and cutting machine spindles may not exceed the maximum permissible speed for grinding wheels or cutting discs. This maximum rotating speed should be indicated on the grinding machine and tested regularly.

2.5.7 All machines shall be operated according to the manufacturers' specifications and safety instructions.

2.5.8 Machines and equipment shall be placed safely away from moving trains in the section, station yards and shunting yards. Machines and equipment shall be safeguarded when transported and shall be stored in a safe place when not in use. Machines, equipment and trolleys not being used shall be removed from track and secured with chains and padlocks.

2.5.9 Jumper cables shall be tested regularly for the correct electrical conductivity and shall be positioned before the track is broken (Annexure 2-1).

2.5.10 Care shall be taken that no steel objects such as straightedges make contact with both rails. This will result in short-circuiting of track circuits. Personnel could also sustain electrical shock and be seriously injured.

2.6 FIRE PREVENTION.

2.6.1 GENERAL.

2.6.1.1 No welding or grinding shall be done within 20m from any truck or road vehicle transporting flammable liquids or gasses.

2.6.1.2 Care shall be taken during grinding and cutting, to ensure that sparks do not cause veld fires. All grinding and cutting machines shall be fitted with spark shields. Development of fire hazards shall be prevented, especially in windy conditions. Any fires shall be extinguished immediately.

2.6.1.3 Machines shall be switched off when refuelling. Equipment and fuel shall not be placed in combustible areas.

2.6.1.4 Gas cylinders and fuel shall be stored and transported separately.

2.6.1.5 Gas equipment shall not be ignited with butane lighters .Flint-lighters shall be used for this purpose.

2.6.1.6 Dye penetrant shall be stored safely and away from all heat sources.

2.6.1.7 Fire extinguishers shall be in close proximity when gas equipment, fuel and machines are stored, transported or used and shall be in good working order. Fire extinguishers shall be checked daily by the welding personnel and annually by fire personnel. A syringe and water container shall be kept at hand to wet grass and other flammable material in the vicinity before welding, cutting or grinding on track.

2.6.2 GUIDELINES REGARDING THE PREVENTION OF VELD FIRES.

2.6.2.1 These paragraphs must be read in conjunction with the relevant paragraphs in the Manual for Track Maintenance (2000).

2.6.2.2 Dry grass is highly flammable and sparks originating from welding and grinding equipment can easily cause veld fires.

2.6.2.3 Strong winds may carry sparks over long distances thus increasing the risk of a veld fire.

2.6.2.4 Veld fires are caused by:

- Damaged or no spark arrestors used with gas welding equipment.
- Sparks from grinding and disc cutting machines.
- Faulty electrical cables.
- Incorrectly fitted crucible covers.
- Careless working procedures, i.e. the incorrect use of grinding machines, gas and electric welding equipment.
- Dumping of hot risers and slag from exothermic casting against grass slopes or on ash banks.
- Making fire paths without considering prevailing weather conditions or taking necessary precautionary measures.
- Gas cutting of rails and not taking necessary precautions and adequate care.
- Negligence in making open fires and cooking activities.
- Cigarette butts thrown aimlessly in grass.
- Glass objects, such as cold drink bottles, carelessly discarded causing veld fires by magnifying the sun's rays.

2.6.2.5 All Transnet workers are responsible for managing risk and preventing losses and claims caused by veld fires.

2.6.2.6 Personnel shall be conversant with the causes of fire and take precautionary measures for prevention thereof. They shall be trained in the correct use of fire extinguishing equipment and shall be able to assist in extinguishing uncontrolled fires. They shall also know the alarm signals for veld fires, and shall report sparks and cinders originating from locomotives.

2.6.2.7 The policy with respect to the removal of flammable material and the provision and maintenance of firebreaks shall be communicated to all relevant personnel.

2.6.2.8 Supervisors and responsible persons at a work site shall ensure that the necessary instructions and guidelines are adhered to. Fire drills shall be practiced regularly to ensure that everybody knows who:

- Takes overall charge
- Is in charge of teams with extinguishers and,
- Is in charge of teams with spades to make fire paths.

2.6.2.9 The following measures are necessary to prevent confusion in the event of a veld fire.

- Arrange for regular safety talks.
- Make use of local fire department for fire prevention training.

2.6.2.10 Cigarette butts shall be put out in a correct manner and not discarded where it can create a fire.

2.6.2.11 Glass utensils such as cold drink bottles that may cause a magnifying effect shall be thrown into a shallow hole and covered with soil.

2.6.2.12 The making of fires shall be prohibited, but if necessary, these fires shall never be left unattended, shall be under full control at all times and extinguished before leaving the work area.

2.6.2.13 Other types of work, or work in station yards or shunting yards shall be performed when severe windy conditions prevail.

2.6.2.14 Machinery and equipment shall be in good working order.

2.6.2.15 Appropriate fire fighting equipment shall be available, e.g.:

- Portable fire extinguishers.
- Syringes and pumps.
- Fire fighters/swatting equipment.
- Enough water to extinguish a veld fire e.g. cleaned used (zoom) cans filled with water, marked to identify water.
- Syringe pumps and water cans, at the work site, to wet the grass around the work area when considered necessary.

2.6.2.16 An alarm system (e.g. a special signal with the alarm hooters) shall be introduced to minimize the reaction time in the event of a veld fire.

2.6.2.17 Inflammable screens shall be available to deflect sparks from machines. Vehicles, machinery and gas cylinders are not to be left in fire hazard areas.

2.6.2.18 Personnel shall, while executing high-risk work, be alerted and ready to extinguish fires that could start during any working process and can cause veld fires.

2.6.2.19 Precautions and care shall be taken when cutting with gas equipment.

2.6.2.20 When working with grinders or disc cutters, additional precautionary measures are necessary to prevent fires. Screens supplied on Road Rail Vehicles shall be used.

2.6.2.21 Necessary precautions shall be in place when performing exothermic casting or Cad welding of bonds.

2.6.2.22 After completion of work:

- Moulds, risers and slag shall be buried away from the track formation.
- Exothermic packing material and other refuse shall be returned to the depot and not burned on site.

2.6.2.23 The following shall be discussed during Act 85 meetings:

- Fire prevention measures.
- Availability and condition of fire fighting equipment.
- Fire fighting training requirements.
- Status of firebreaks.

2.6.2.24 Personnel living on Transnet property shall adhere to the following fire prevention precautions:

- Areas around dwellings (at least 3m) shall be cleared of all grass and combustible material.
- Under no circumstances shall grass and other objects/materials be set alight.
- Where possible, local municipal services shall be used to remove household waste.

2.6.2.25 Actions in the event of a veld fire:

- All other activities shall be ceased and all personnel applied to fire fighting duties.
- Density of vegetation will determine whether only fire swatters or all available equipment shall be used.
- Firebreaks shall be made down wind to limit fire damage.

- Attempts to restrict the fire to Transnet property shall be made.

2.6.2.26 Fire Investigation teams shall:

- Under no circumstances accept responsibility on behalf of Transnet Freight Rail, as this may lead to differences between Transnet Freight Rail and the Insurers.
- After the fire has occurred, no work shall be done on the firebreak, until the Claims Examiner has completed his investigation.

2.7 SAFE HANDLING AND USE OF GAS EQUIPMENT.

2.7.1 GENERAL.

2.7.1.1 Only trained Track Welders who were assessed and found competent will be allowed to use gas equipment.

2.7.1.2 Track Welders shall be evaluated at least every second year and refresher training given when required.

2.7.1.3 Three types of gas are used, namely oxygen, acetylene and liquid petroleum gas (LP-gas), each with its own distinctive cylinder.

2.7.1.4 Knowing the different gasses and their respective cylinders in important in order to ensure safety and avoid damage and loss of equipment.

2.7.1.5 Water, dirt, oil or grease shall under no circumstances come into contact with gas cylinders or cylinder valves. Cylinder valve safety guards shall be firmly in position.

2.7.1.6 Cylinders may not be dragged, rolled or pushed over, but transported on a cylinder trolley or carried by hand. Cylinders may not be dropped when off-loaded from vehicles.

2.7.1.7 Cylinders shall not come into contact with electrical appliances or live wires.

2.7.1.8 Open lights and fires shall be kept away from cylinders.

2.7.1.9 Cylinders may not be used as work surfaces or as a roller.

2.7.1.10 Only standard size spanners shall be used to open and close cylinder valves.

2.7.1.11 Gas cylinders shall be transported only in well ventilated trucks.

2.7.2 OXYGEN.

2.7.2.1 Oxygen is a colourless gas and is supplied in black cylinders.

2.7.2.2 Oxygen is not combustible, but promotes combustion, and shall be stored separate from combustible gasses.

2.7.2.3 Oxygen that comes into contact with grease, oil, clothing, sawdust and other fine organic materials, can easily combust. When oil and grease come into contact with compressed oxygen, an explosion can occur.

2.7.2.4 Oxygen is supplied in high-pressure cylinders with a content pressure of 17.5 – 20MPa. Oxygen cylinders have right-hand thread.

2.7.2.5 Compressed oxygen may not be used to fan fires, operate compressed-air tools or dust off clothing. Fatal consequences can result.

2.7.3 ACETYLENE.

2.7.3.1 Acetylene has a distinctive smell and is supplied in a maroon cylinder with a flat bottom.

2.7.3.2 The cylinder is filled with a porous mass (lime silicon), drenched with acetone, which releases acetylene. Acetylene is kept at a pressure of 1.75MPa and is highly explosive when mixed with air. A mixture consisting of 80% acetylene and 20% air will explode immediately when it comes into contact with a hot object or flame, especially in confined spaces.

2.7.3.3 Acetylene cylinders are equipped with left-handed thread, which indicates a combustible gas. Acetylene cylinders shall always be used in an upright position. Acetone will flow from the cylinder if the cylinder is tilted more than 20° from vertical.

2.7.3.4 Acetylene shall not come into contact with copper. Copper-*acetylite* is caused, which is highly explosive.

2.7.3.5 When acetylene cylinders are transported horizontally, the cylinders shall be allowed to stand upright for a while (± one hour) after off-loading, so that the acetone can restore back to normal before used.

2.7.4 LIQUID PETROLEUM GAS (LP-GAS).

2.7.4.1 LP-gas cylinders may vary in colour, depending on the suppliers (e.g. white, silver, orange or green).

2.7.4.2 LP-gas cylinders with dual outlet valves and with a yellow vertical stripe may not be used. These cylinders are used by industries only. LP-gas cylinders have left-hand thread.

2.7.4.3 Liquid petroleum, if it is kept under moderate pressure, changes to a gas when pressure is released.

2.7.4.4 LP-gas is heavier than air, and for this reason it drops to ground level and can penetrate for example sewer pipes as well as any low cavities on ground level.

2.7.4.5 LP-gas, although not poisonous, has a distinctive smell and may cause suffocation (asphyxia) in places with poor ventilation. LP-gas has a low ignition point and may ignite when in to contact with an open light or flame.

2.7.4.6 LP-gas has a chemical reaction on rubber, which causes the rubber to perish.

2.7.4.7 LP-gas cylinders shall always be used, secured, stored and transported in an upright position.

2.7.5 STORAGE OF CYLINDERS.

2.7.5.1 Gas store rooms shall comply with SABS 087.

2.7.5.2 Gas store rooms shall always be built from refractory materials and be well ventilated at the top and at the bottom. Gas store rooms shall have proper drainage.

2.7.5.3 Full and empty cylinders shall be stored separately and empty cylinders shall be marked "empty". Leaking cylinders may not be stored in storerooms.

2.7.5.4 Acetylene and LP-gas cylinders shall always be stored and secured in an upright position.

2.7.5.5 Oxygen cylinders may be stored upright or horizontally. (Maximum 4 layers stacked). Cylinders shall be wedged to prevent them from rolling.

2.7.5.6 A policy of first-in-first-out shall be applied when issuing cylinders.

2.7.5.7 Cylinders shall be protected against sun, rain, cold, wet ground, acids and rust. (To ensure proper ventilation, no covering, such as protection against the sun, may touch the cylinders).

2.7.5.8 Valves of empty cylinders shall always be closed to prevent breathing. If it is found that a cylinder valve is open, it shall be closed and a label tied to it reading: "WARNING - CYLINDER VALVE LEFT OPEN WHEN EMPTY". This will ensure that moisture and a pureness tests will be done before the cylinder is filled again.

2.7.6 PROCEDURES WITH REGARDS TO LEAKING CYLINDERS.

2.7.6.1 If a cylinder valve does not close completely, the valve shall be opened and closed swiftly to blow out any foreign material from the valve seat, with the regulator disconnected. If the valve still does not close completely, the cylinder shall be taken to a safe place away from walkways and buildings and the gas released into the atmosphere. No open flames, including cigarettes, running machinery and vehicles shall be in the vicinity before the cylinder valve, with the cylinder in the upright position, is opened and the gas released into the atmosphere. The valve shall be closed once the cylinder is empty. A label shall be attached to the cylinder, reading: "WARNING! UNSERVICEABLE CYLINDER, VALVE DID NOT CLOSE OFF", and returned to the supplier.

2.7.6.2 If a gas leak around the valve spindle is evident when the valve is opened, the gland nut shall be tightened. If a gas leak is still evident, the valve shall be closed and the cylinder shall be returned to the supplier. A label: "WARNING! UNSERVICEABLE CYLINDER VALVE LEAKS WHEN OPENED", shall be tied to the cylinder.

2.7.6.3 In cases of any other causes of leaking cylinders, such as safety appliances between the neck of the cylinder and the valve rod, or any other part of the cylinder body, the procedure in 2.7.6.1 shall be followed. In such cases, the label shall indicate where the leak is, e.g.: "WARNING! UNSERVICEABLE CYLINDER LEAKS AT VALVE THREAD".

2.7.7 IDENTIFICATION AND CARE OF GAS WELDING EQUIPMENT.

2.7.7.1 REGULATORS.

2.7.7.1.1 The function of a regulator is to reduce the high gas pressure to the prescribed working pressure.

2.7.7.1.2 The pressure-regulating screw is set to obtain the pressure needed at the burner. The second gauge on the regulator indicates the cylinder pressure.

2.7.7.1.3 Only high-pressure regulators shall be used for track welding purposes. Oxygen regulators are designed to withstand a high cylinder pressure of approximately 20MPa.

2.7.7.1.4 Most regulators have a cylinder-capacity gauge and a release-pressure gauge.

2.7.7.1.5 If a regulator continues to release gas when the regulating-screw is turned out, or pressure builds up on the low-pressure side of the regulator when the burner valve is closed, the regulator shall be replaced immediately. If gauges do not return to zero when pressure is released, the diaphragm is defective and the gauge shall be replaced immediately.

2.7.7.1.6 A regulator shall always be treated as a precision instrument. A regulator shall not be bumped or subjected to sudden pressure, i.e., opening the cylinder valve quickly. The pressure in the regulator shall be released when the work is completed.

2.7.7.1.7 Faulty regulators may not be used. Regulators and supply pipes shall be removed from cylinders before gas equipment is transported.

2.7.7.2 FLASHBACK ARRESTORS.

2.7.7.2.1 Flashback arrestors prevent gasses from flowing back into the regulators and cylinders due to incorrect pressures, blocked nozzles or backfiring.

2.7.7.2.2 Approved flashback arrestors shall be connected to regulators. (Harris type No. 237-086; model 85-10 left-hand thread LP-gas and Harris type No. 237-087; model 85-10 right-hand thread Oxygen).

2.7.7.2.3 Approved flashback arrestors shall be connected to torch-ends. (Harris type No. 237-332; model E460 left-hand thread LP-gas and Harris type No. 237-333; model E460 right-hand thread Oxygen).

2.7.7.3 GAS SUPPLY HOSES.

2.7.7.3.1 Gas supply hoses are used to supply gas from the cylinders to the burner. To ensure safety, it is important to know the difference between various gasses and the respective hoses:

- Black or Blue rubber hoses only for oxygen.
- Red rubber hoses only for acetylene.
- Orange Neoprene hoses only for LP-gas.

2.7.7.3.2 Due to the chemical reaction of LP-gas on rubber, acetylene regulators and hoses may not be used for LP-gas.

2.7.7.3.3 All oxygen couplers have right-hand thread. All flammable gas couplers have left-hand thread.

2.7.7.3.4 Only brass connectors may be used to connect supply hoses. (Copper connectors may not be used).

2.7.7.3.5 Supply hoses longer than 25m are not recommended, as it causes a drop in pressure.

2.7.7.3.6 Hoses may not get into contact with heat, oil, grease or welding slag and sparks. Leaking hoses shall be replaced immediately.

2.7.7.3.7 Hoses may not be placed where trains or road vehicles can move over it.

2.7.7.4 COMPLETE HEATING ATTACHMENT (BURNERS).

2.7.7.4.1 A complete heating attachment consists of:

- A shaft (Universal handle) for cutting and heating.
- Mixing chamber.
  - A F43 mixing chamber for LP-gas.
  - A D2-43 mixing chamber for acetylene.
  - Single or double head stainless steel tip tube-extensions in different lengths for LP-gas.
- Various types of nozzles for heating applications, e.g.
  - H2-nozzles (for wheel-spin burns and battered rail ends) and
  - H3-nozzles (for rail-manufactured crossings), used for pre- or post heating
  - A block nozzle with 32 holes in three rows, used for exothermic casting.

2.7.7.4.2 Different heating attachments (burners) may be used for Oxy-acetylene cutting and welding.

2.7.7.4.3 The instructions of the manufacturer shall always be followed when any burner is lit or extinguished. Only approved nozzle cleaners shall be used to clean nozzles, while oxygen is flowing. The Oxy-LP-gas nozzle shall be removed when cleaning is necessary.

2.7.7.4.4 The function of the mixing chamber is to mix the flammable gas and oxygen and to supply the mixture at a constant pressure to the nozzle.

2.7.8 FLASHBACK.

2.7.8.1 Flashbacks occur when the flame enters the burner (complete heating attachment) and goes back (retrogresses) into the supply system when working without flashback arrestors.

2.7.8.2 A cylinder can explode and/or the burner and regulators can be damaged beyond repair.

2.7.8.3 Torch-end flashbacks cause carbon layers in the burner, gas valves, supply hoses, flashback arrestors and regulators, reducing their effectiveness and shortening their life span.

2.7.9 REVERSE FLOWING.

2.7.9.1 Reverse flowing occurs when supply hoses contain a quantity of the opposite gas or air, e.g., combustible gas and oxygen are mixed in a single supply hose.

2.7.10 CORRECTIVE ACTIONS.

2.7.10.1 Regulators not set at the correct pressure or nozzles ignited before the flammable gas has begun flowing properly causes backfiring.

2.7.10.2 The correct regulator and nozzle shall be used for the type of work being done. Every regulator shall be set at the correct operating pressure for the equipment being used.

2.7.10.3 The nozzle shall be kept away from any ignition source until the fuel gas flows freely from the nozzle. A triple flint lighter is recommended to ignite burners.

2.7.10.4 When a flame suddenly extinguishes while the burner is being used, it might be as a result of:

- Incorrect regulator pressure and /or gas flow.
- A blocked nozzle.
- The nozzle held too close to the work.
- Overheating of the nozzle.

2.7.10.5 Both universal handle valves shall be closed immediately and the regulator setting and cylinder pressure checked. If the nozzle has overheated, it shall be immersed in cold water with the oxygen valve is left open.

2.7.11 USE OF GAS CYLINDERS AND EQUIPMENT.

2.7.11.1 Cylinder valves may not be changed, loosened or removed from cylinders.

2.7.11.2 A complete heating attachment may not be ignited without the connectors and couplings being tested for leaks first.

2.7.11.3 Testing for leaks may not be done with a flame. Leak detection spray shall be used instead, e.g. HARRIS Safety-spray, type 237-320.

2.7.11.4 A complete heating attachment, which has been ignited, may not be hanged over the cylinder valves or regulator. Nor may the flame be allowed to touch the cylinder.

2.8 REPAIRING PROCEDURE FOR KICK-OUTS.

2.8.1 GENERAL.

2.8.1.1 Kick-outs normally occur where:

- There are extreme compressive stresses in the rails.
- Where there is a lack of ballast in the Perway, especially in curves.
- Wheel-spin burns are repaired and preheating is done incorrectly.
- The Perway was screened and/or tamped outside temperature ranges.

2.8.2 INSPECTION AND DECISION MAKING.

2.8.2.1 The Track Inspector, in conjunction with the welding personnel, shall decide which method shall be followed to repair a kick-out.

2.8.2.2 The following aspects shall be taken into consideration when attending to a kick-out:

- Safety of the employees.
- The temperature of the rails.
- Rail type and profile.

2.8.3 PROTECTION.

2.8.3.1 Protection shall be afforded in accordance with Spoornet General Appendix No 6, (Part 1).

2.8.4 PREPARATION.

2.8.4.1 PREPARATION BY TRACK PERSONNEL.

2.8.4.1.1 Preparation work described in the Manual for Track Maintenance (2000) shall be done before the repairing process commences.

2.8.4.1.2 Jumper cables shall be fitted where the rail will to be cut by Oxy-Propane gas cutting equipment, to ensure electrical continuity within the rail and to prevent electric shock as a result of the potential difference over the rail ends (Annexure 2-1).

2.8.4.1.3 The following shall be checked during preparation:

- Is there enough ballast stone?
- All sleeper fastenings shall be fastened.

2.8.4.2 PREPARATION BY WELDING PERSONNEL.

2.8.4.2.1 The end of the kick-out shall be determined.

2.8.4.2.2 The location where the rail will be cut may not be closer than 4.2m from an exothermic joint or 2m from a flash butt joint.

2.8.4.2.3 Both sides of the rail that will be cut shall be secured to the sleepers.

2.8.5 REMOVING KICK-OUTS.

2.8.5.1 A minimum distance of 12m shall be measured from the end of the kick-out and marked on both rails; this will ensure a safer cutting procedure and simplify the alignment process afterwards.

2.8.5.2 A gap of ±25mm shall be cut (Annexure 2-2) and the procedure in Paragraph 3.8.5 followed.

2.8.5.3 The process shall be repeated until the rail stops creeping.

2.8.5.4 Rail ends shall be cut with a disc cutter to remove oxidized metal caused by the gas cutting process once the track is aligned.

2.8.5.5 Kick-outs shall be repaired in accordance with the Manual for Track Maintenance (2000) and cast exothermic joints as per Chapter 11.

2.8.5.6 It is advisable, for Cr-Mn rails, that a 6m closure rail is inserted on sections of rail where Oxy-Propane gas cutting equipment was used.

CHAPTER 3 – TOOLS AND EQUIPMENT.

3.1 HAND TOOLS.

3.1.1 BALL-PEEN: A ball-peen hammer is used for light work such as dressing and punching work and is available in 200 gram to 900 gram weights.

3.1.2 CHIPPING HAMMER: A chipping hammer is used to remove welding slag and spatter from steel. The flat side of the hammer is used on flat surfaces and the sharp edge for de-scaling in holes and difficult to reach places. Safety goggles shall be worn when a chipping hammer is used.

3.1.3 CHISEL: A chisel is used to clean rough surfaces, remove pop-rivets, split nuts from bolts and cut steel sheets. The cutting edge of the chisel is shaped at an angle of 60°. Mushrooming on the chisel shall be removed.

3.1.4 COLD-SET: A cold-set is a chisel attached to a handle and has a tempered point, which is shaped at an angle of 60°. It is used to cut off copper bonds. Mushrooming on the cold-set shall be removed. It shall be handled with care and the safety of people in the vicinity shall be considered when used.

3.1.5 COMBINATION PLIERS: Combination pliers are a dual-purpose pliers, equipped with side-cutting edges, combination cutters and clamps. The side-cutting section of the pliers is used to cut wire.

3.1.6 FENCING PLIERS: Fencing pliers are used as gripping and wire cutting tools. The front grip and the back part (handle) are used as leverage to fence wire.

3.1.7 FUNNELS: Funnels are used to pour liquid or powder from one container into another, made from plastic or metal, and may be equipped with a sieve.

3.1.8 G-CLAMP: A G-clamp is used to clamp a work piece to a rigid object to prohibit it from moving. G-clamps shall always be placed square on any work piece.

3.1.9 HACKSAW: A hacksaw is used to saw various metals. A saw blade shall be hooked into the mounting pins with the cutting edges of the teeth facing forward.

3.1.10 NOZZLE TIP CLEANERS: Nozzle tip cleaners are used to clean surfaces, holes or grooves of gas cutting and welding nozzles. The correct size shall be used to clean nozzle holes or grooves by in-and-out movements until free from any obstacles.

3.1.11 SCREWDRIVERS - Straight Shank: The following types of screwdrivers are used, flat, Philips and Posy screwdrivers. The correct size shall be chosen and the screwdriver shall be placed square into the groove of the screw.

3.1.12 SHIFTING SPANNER: A shifting spanner is used to fasten and loosen nuts and bolts of various sizes.

3.1.13 SIDE-CUTTERS: Side-cutters are used to remove the outer cables and insulation from electrical wire and to cut soft thin wire.

3.1.14 SLEDGE HAMMER: A sledgehammer is a large, heavy, powerful hammer used to drive or remove various objects e.g. sleeper fastenings and wedges, and is available in sizes from 1.8kg to 7.25kg.

3.1.15 STEEL WEDGES: Steel wedges are thick, flat steel plates of various width and thickness, and are tapered to a smaller thickness. Steel wedges are used to force objects apart, to widen an opening, to lift heavy objects, or to keep a jig firmly in position.

3.1.16 STEEL WIRE BRUSH: A steel wire brush is used to remove dirt, scale, and rust, welding scale or splatter, from steel surfaces.

3.1.17 TOMMY-BAR: A Tommy-bar is a straight round or angular steel bar of various lengths, with one flat and one pointed end, bent in opposite directions. The flat end is used for leverage and the pointed end for aligning holes.

3.2 MARKING TOOLS.

3.2.1 CENTRE PUNCH: A centre punch is used for marking the centre of holes to be drilled or cut, is flat on the one end and has a sharp point at the other end.

3.2.2 CHALK LINE: A chalk line is a line-filled reel in a casing with chalk powder and is used for marking straight lines on surfaces such as concrete floors, and large metal plates.

3.2.3 COMBINATION SQUARE SET: The combination square set is a steel ruler with a central groove on the one side where three different marking-off devices are slotted in, e.g. a square head, centre head and a protractor, which can be mounted to the rule.

3.2.3.1 The square head is used to mark angles of 45° and 90°.

3.2.3.2 The centre head is used to determine the centre of axles or other cylindrical objects.

3.2.3.3 The protractor is used to measure and mark off angles of any degree and direction.

3.2.4 DIVIDERS: A divider is used for drawing arches and circles, determining the centre of a work piece, bisecting lines and transferring measurements. It has two sharp-pointed legs.

3.2.5 LETTER AND FIGURE STAMPS: Letter and figure types are used to stencil on metal objects and shall be used while the steel is still hot. Mushrooming on stamps shall be removed.

3.2.6 PRICK PUNCH: A prick punch is used to permanently mark steel surfaces. It is flat on the one side and has a sharp point (contained angle of 60°) on the other side.

3.2.7 RULER: Rulers are used to make accurate measurements and are made from steel or wood.

3.2.8 SCRIBER: A scriber is used for precision marking on work surfaces. It has a sharp straight edge on one end, and a sharp point at the other end, bent at a 90° angle.

3.3 MEASURING AND TESTING EQUIPMENT.

3.3.1 AMP-METER: An amp-meter is used for measuring electrical current.

3.3.2 CONTOUR GAUGE MEASURING RAIL-BOUND AND MONOBLOCK CROSSINGS: This gauge is used to measure cant, radii, and relative height of nose and wings (Annexure 3-1).

3.3.3 CONTOUR GAUGE MEASURING RAIL-MANUFACTURED CROSSINGS: This gauge is used to measure cant, radii, and height of nose and wings (Annexure 3-2).

3.3.4 DEPTH GAUGE: The depth gauge is used to measure wear and wheel damage on crossings and depth of wheel-spin burns. Measuring wear and wheel damage on crossings is done by placing the notched straightedge of the depth gauge transversely over the wings, then pressing down and releasing the aluminium measuring shaft of the depth gauge, then picking up the depth-gauge and pressing the aluminium measuring shaft in up to the measuring indicator block and taking the reading. Measuring depth of a wheel-spin burn is done by placing the notched straightedge part of the depth gauge in the longitudinal direction over the wheel-spin burn, then pressing down and releasing the aluminium measuring shaft, then lifting up and taking the reading (Annexure 3-3).

3.3.5 DYE PENETRANT: Dye penetrant is used to highlight rail defects and cracks (indicated by red lines or red dots). Dye penetrant is supplied in three different spray cans which are marked with descriptive stickers, namely cleaner, which is used to remove any impurities, a penetration solution, which is used to penetrate cracks and defects; and a developer.

3.3.6 ELECTRONIC HARDNESS METER: This is a hardness meter to determine the metal hardness.

3.3.7 ELECTRONIC TEMPERATURE GAUGE: An electronic temperature gauge is used to measure rail temperature during preheating and welding. The probe of the temperature gauge shall be placed directly on the area to be measured.

3.3.8 GUT: Gut is used as an aid to measure alignment of the track and crossings. It is normally 10m in length.

3.3.9 TAPE MEASURES: Tape measures are used to take short or long measurements, and are available in lengths varying from 1m to 100m.

3.3.10 MIRROR: Mirrors are used to visually examine exothermic joints from underneath the rail.

3.3.11 STOPWATCHES: Stopwatches are used to measure time intervals accurately.

3.3.12 STRAIGHTEDGE: A straightedge is a steel ruler, is available in lengths varying from 0.5m to 1.5m and is subdivided into millimetres. It is used in the setting-up of rails, measuring of battered rail ends, measuring of wheel-spin burns, and quality control of welding and grinding work. A straightedge shall be held at right angles (vertically and horizontally) to the work piece when used.

3.3.13 TAPER GAUGE: A taper gauge is a metal instrument to determine welding tolerances of 0mm to 4mm in graduations of 0.1mm. It is used with a 0.5m or 1m straightedge.

3.3.14 TEMPERATURE CRAYONS: Temperature crayons are used to monitor the temperature during preheating and welding. The temperature crayons are pulled over the heated surface. It melts when the required temperature is reached.

3.4 WELDING EQUIPMENT.

3.4.1 NOTE: All equipment shall be fastened when transported. Only persons that have been trained, assessed and certified by an accredited person (Track Welding) may use this equipment.

3.4.2 ANGLE GRINDER: An angle grinder is used for grinding flat surfaces, as well as cutting of steel. It shall be held firmly with both hands to ensure that sparks are deflected. Safety gear shall be worn and care shall be taken when using an angle grinder.

3.4.3 BENCH GRINDER: A bench grinder is used for sharpening and re-facing tools such as cutters, chisels and drill bits. Only the grinding wheel's grinding surface shall be used for

grinding and not on the side of the grinding wheels. Safety goggles shall always be worn when using a bench grinder.

3.4.4 DISC CUTTER: A disc cutter is used to cut the rail sound, smooth and square. A disc cutter's power source may be electric, petrol or hydraulic, and shall deliver a maximum rotating speed of 5400 revolutions per minute measured at the cutting disc spindle. Only cutting discs of 350mm x 25.4mm x 4mm may be used. The machine shall be mounted to the rail with a mounting clamp. When using a disc cutter one shall always stand firm and comfortable, and start cutting on top of the crown with a sawing action and progress systematically down to the base. Protective gear shall always be worn, and cutting discs removed when work is complete.

3.4.5 MC2 GRINDING MACHINE (Machine crossing): A MC2 grinding machine is used to grind all types of crossings, to do rough grinding on rails, as well as removing metal flow (overlaps) from rails, crossings, points and guard rails. AMC2's power source may be electric, petrol, or hydraulic and shall not exceed 3800 revolutions per minute measured at the grinding disc spindle. Only grinding stones of 250mm x 32mm x 25.4mm may be used. The machine is mounted on four wheels, which move in the longitudinal direction of the track. The grinding wheel is mounted vertically on the machine, and can tilt 30° left or right. The grinding stone is moved transversely when grinding takes place, and the vertical setting is done by hand and locked in position.

3.4.6 MC3 GRINDING MACHINE: This machine is identical to the MC2 grinding machine; apart form the fact that the horizontal and vertical setting is done by means of notches on the height adjustment lever.

3.4.7 MP12 GRINGING MACHINE (Machine profile): A MP12 grinding machine is used to profile the rail crown. Its power source may be electric, petrol or hydraulic, and shall not exceed 6100 revolutions per minute. Only grinding stones of 150mm x 75mm x 15.8mm may be used. The MP12's grinding stone is mounted horizontally between two wheels, can tilt through 90° and moves longitudinally on the rail crown.

3.4.8 NEEDLE DE-SCALER: A needle de-scalar is an air driven tool, which is used to remove rust and foreign objects from steel surfaces. It shall be held in a vertical position above the work piece and moved to and fro. Safety gear shall be worn.

3.4.9 RAIL SHEARING MACHINE: A rail shearing machine is used to shear excess metal from an exothermic joint. Two types of machines may be used; a double blade or a single blade machine. Both machines may be driven by a hydraulic pump or two-stroke petrol motors. The machine shall be placed over the work piece, the lock valve closed, and pumped-up. The lock valve shall be closed after completion, pumped back and the shearing machine removed.

3.4.10 WELDING MACHINES: The welding machine is the power source for all track welding activities and can be petrol, diesel or electrically driven. The electric-driven machine shall be able to deliver a minimum of 270 amps at a duty cycle of 80% when used for track welding. It shall be placed in a safe place and the cables shall always be connected in the correct manner. Cables shall never be laid over open track, but laid underneath the rails. The machine shall be set to the correct amperage based on the electrode being used for welding.

3.4.11 WIRE FEEDER: A wire feeder is used as an additional machine with the welding machine to feed flux-cored wire to the work piece. The positive wire shall be connected to the welding machine and the earth wire to the work piece.

3.5 WIRE FEEDING MACHINE FOR FLUX-CORED WIRE.

3.5.1 OPERATING AND CARE OF THE WIRE FEEDING UNIT.

3.5.1.1 First, the wire feeder is placed clear from the track.

3.5.1.2 The positive cable of the welding machine is then connected to the positive pole (cathode) of the wire feeder.

3.5.1.3 The negative cable (anode) of the welding machine is then connected to the work piece. The negative pole of the wire feeder is clamped to the negative clamp of the welding machine.

3.5.1.4 The supply cable of the welding gun is then to the wire feeder.

3.5.1.5 The welding gun shall be kept straight where possible to ease the feeding of the welding wire. The welding wire reel shall be positioned in the wire feeding machine. Damaged parts of the wire shall be cut off. The wire shall then be fed through the intermediate and outlet nozzle in to the steel liner of the welding gun.

3.5.1.6 The correct wire feed and deposit rates are obtained by setting the feeding tension, amperage and voltage of the machine for 1.6mm flux-cored wire according to the manufacturer’s recommendations.

3.5.1.7 The welding machine is then switched on and the trigger on the welding gun pressed to feed the wire through the gun until it protrudes approximately 35mm through the gun.

3.5.1.8 To protect the nozzle, it shall be ensured that the gas shield is present at all times. The prescribed anti spatter spray shall be used on the gas shield and nozzle to control excessive sticking of spatter.

3.5.1.9 The drop of molten steel formed at the end of the wire shall be cut off immediately after welding.

3.5.1.10 A 3m welding gun for welding wheel-spin burns and battered rail ends and 4.5m welding gun for welding all crossings shall be used.

3.5.1.11 Refer to the RRV Welding manual semi automatic welding equipment.

3.5.1.12 The following steps shall be taken when replacing empty reels:

- Disconnect the welding gun from the wire feeding machine and remove the remaining flux-core wire by pulling it back with a pair of pliers.
- Blow the supply cable clean if compressed air is available. Compressed oxygen may not be used for this purpose.
- Place the new reel in the wire feeder and continue as described in 3.5.1.

3.5.1.13 The following actions shall be taken when welding is completed:

- Switch off the welding machine.
- Cut off the end of the wire (approximately 5mm) if required.
- Release the tension on the rollers.
- Reel the wire back onto the reel and secure.
- Remove the reel with the wire and place it back in the original packaging.
- Disconnect the wire feeding machine form the welding machine.
- Remove the wire feeding machine and supply cable from the work place and place it safely on the vehicle.

3.6 ARC-AIR GOUGING.

3.6.1 ACCESSORIES.

3.6.1.1 The following items are necessary for gouging:

- A welding machine able to deliver 500 amps.
- A compressor, able to deliver compressed air at 12litres/second at 500 kPa. The compressed air and flow rate shall be sufficient to blow away all molten metal.
- A rubber supply hose, approximately 3m in length, with gouging pliers on the one end and a connector on the other. A side lever shall be mounted to the side of the gouging pliers to clamp the electrode. A trigger on the gouging pliers to control the air through the gouging nozzle shall be fitted.

- A water trap shall be fitted in the correct position at the compressor and shall be kept in a good condition.

3.6.2 ASSEMBLING.

3.6.2.1 The air supply hose of the gouging holder shall be connected to the air cylinder of the compressor. The positive pole of the welding machine shall be connected to the gouging holder. The negative pole of the welding machine shall be connected to the work piece.

3.6.2.2 Position the copper-coated carbon electrode (6.5mm thick x 300mm long) in the gouging holder.

3.6.3 OPERATING PROCEDURE.

3.6.3.1 Switch the welding machine and compressor on.

3.6.3.2 Ensure that at least 500kPa air pressure is available.

3.6.3.3 Open the valve of the compressed air cylinder.

3.6.3.4 Obtain an arc, open air flow and commence with gouging.

3.6.3.5 All loose and work-hardened metal shall be gouged away with a smooth stringer action.

3.6.3.6 If the arc-gouging process is used, a further 2mm shall be removed by means of grinding.

3.6.3.7 Use a rail grinding machine (MC2 or MC3) to obtain a smooth surface.

3.7 GAS WELDING EQUIPMENT: ASSEMBLY AND IGNITING METHOD.

3.7.1 GAS WELDING EQUIPMENT.

3.7.1.1 Oxygen and acetylene or LP-gas cylinders.

3.7.1.2 Regulators for oxygen and acetylene or LP-gas cylinders.

3.7.1.3 Universal shaft with cutting attachment with a range of nozzles.

3.7.1.4 Oxygen and acetylene flashback arrestors.

3.7.1.5 Two lengths reinforced rubber hoses fitted with connectors, clamps and parallel clamps.

3.7.1.6 A set of spanners and a spindle key.

3.7.2 ASSEMBLY PROCEDURE (LP-gas, acetylene and oxygen).

3.7.2.1 Only competent Track Welders may use gas equipment.

3.7.2.2 Cylinders shall be safely fixed into position next to the work place.

3.7.2.3 Cylinder valves shall be opened and closed quickly to blow out any dust or dirt in the valves.

3.7.2.4 The adjusting screws of the regulator shall be set to zero working pressure. This is obtained by turning the adjusting setscrews anti-clockwise until the pressure releases completely.

3.7.2.5 The oxygen regulator shall be connected to the oxygen cylinder valve (right-hand thread). The regulator shall be tightened with the correct spanner (not a shifting spanner). No force may be used, but connections must be sound.

3.7.2.6 The oxygen flashback arrestor shall be connected to the oxygen regulator (right-hand thread) and tightened it with the correct spanner.

3.7.2.7 The acetylene/LP-gas regulator shall be screwed into the acetylene/LP-gas-cylinder valve (left-hand thread).

3.7.2.8 The relevant flashback arrestor shall be connected to the relevant regulator (left-hand thread) and tightened using the correct spanner.

3.7.2.9 The gas supply hoses (acetylene - red; oxygen - blue; LP-gas - orange) shall be connected to the correct coupler of the flashback arrestors. The hose-end shall be fitted with the correct control valve inlet and connected to the flashback arrestor. (Only approved O-clips shall be used).

3.7.2.10 Before the burner is connected to the hoses, the oxygen cylinder valve shall be opened very slowly and the pressure adjusting set screw of the oxygen regulator opened slowly for a short while to blow out any foreign matter from the hose. The cylinder valve shall then be closed. The procedure shall be repeated for acetylene or LP-gas.

3.7.2.11 The flashback arrestor shall be connected to the welding torch. The burner valves shall be closed and all connections tightened with the correct spanner.

3.7.2.12 The correct size nozzle shall be fitted to the burner (a 2F nozzle is used with acetylene and a 2NFF nozzle with LP-gas).

3.7.3 TESTING FOR LEAKS.

3.7.3.1 Ensure that both burner valves are closed.

3.7.3.2 Open the acetylene and oxygen cylinder valve slowly, one full turn. Set the regulators to a pressure of 50 to 60kPa for acetylene and 180 to 200kPa for oxygen.

3.7.3.3 Apply approved Harris Safety-Spray Type 237-320 to all the acetylene and oxygen connections. Start with the cylinder-valve spindle, pressure-screw and then all the connections up to the burner inlet. Bubbles will occur at leaks.

3.7.3.4 Leaks shall be fixed immediately by tightening the leaking connections. If the gas still leaks, the connection is faulty and shall be replaced. A leaking cylinder-valve spindle can be fixed by tightening the spindle nut.

3.7.3.5 After the test has been completed, both cylinder valves shall be closed. Ensure that the setscrews of the regulators are set to zero working pressure. This is obtained when turning the adjusting setscrew anti-clockwise until the pressure releases completely.

3.7.3.6 Open both valves on the burner for 4 to 5 seconds to replace the air in the hose with oxygen and LP-gas. Close the burner valves.

3.7.4 IGNITING PROCEDURE.

3.7.4.1 Check that the regulators are set to zero and that the burner valves are closed.

3.7.4.2 Open both cylinder valves very slowly. Do not open the valve spindle more than one full turn.

3.7.4.3 Set the pressure on the regulators in accordance with the instructions from the manufacturer. If the adjusting screw is turned clockwise, the pressure increases.

3.7.4.4 Open the oxygen valve of the burner for approximately 4 to 5 seconds to blow any air/gas mixture out of the system. Close the oxygen valve.

3.7.4.5 Repeat the procedure for the flammable gas.

3.7.4.6 Open the flammable gas valve a ¼ turn on the burner and ignite the gas flowing from the nozzle, using an approved triple flint lighter.

3.7.4.7 Reduce or increase the flammable gas flow by means of the burner valve.

3.7.4.8 Open the oxygen valve of the burner and set the flow until the required flame is obtained.

3.7.4.9 NEUTRAL FLAME: Is obtained by mixing an equal amount of oxygen and flammable gas, which will result in a blunt blue inner cone (Figure 3.1).

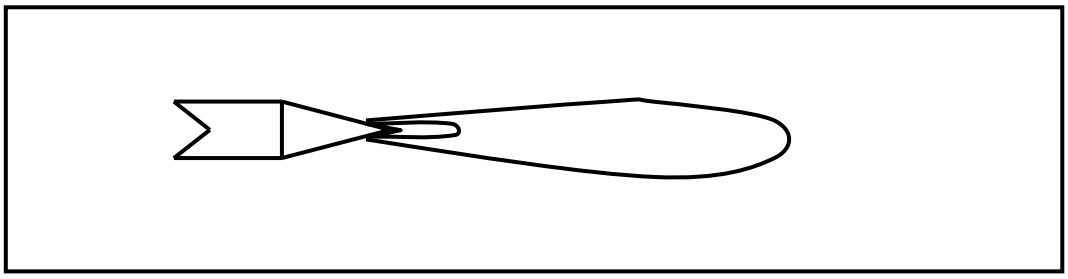

Figure 3.1. Neutral Flame.

3.7.4.10 CARBURISING FLAME: Is obtained by mixing a slight surplus of flammable gas with oxygen, which will result in a featherlike inner cone (Figure 3.2).

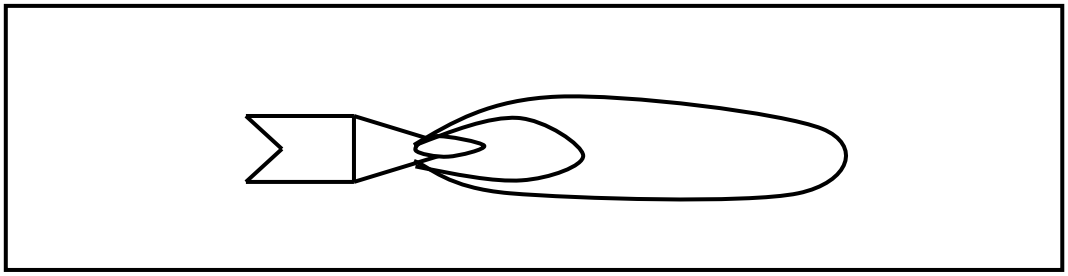

Figure 3.2. Carburising Flame.

3.7.4.11 OXIDISING FLAME: Is obtained by mixing an excessive amount of oxygen with flammable gas, which will result in a sharply defined inner cone (Figure 3.3).

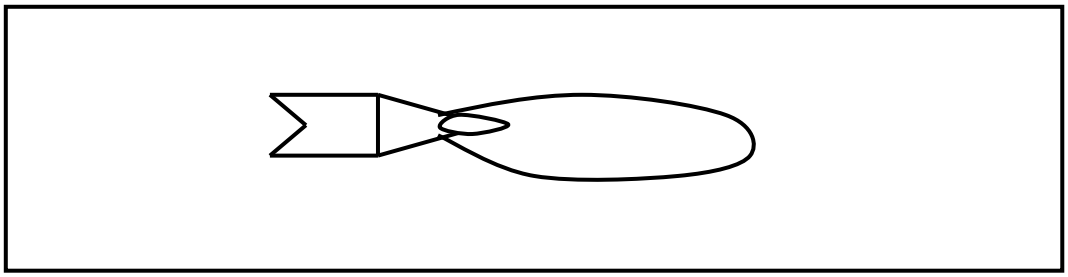

Figure 3.3. Oxidising Flame.

3.7.5 SHUT-OFF PROCEDURE.

3.7.5.1 To extinguish the flame, first close the acetylene/propane valve of the gas equipment, and then the oxygen valve.

3.7.5.2 Close both cylinder valves.

3.7.5.3 Ensure that the setscrews of the regulators are set to zero outlet pressure, in other words, turn the adjusting setscrew anti-clockwise as far as it can turn, but do not force beyond this point.

3.7.5.4 Open the gas equipment valves one by one to release the pressure in the regulators and hoses.

3.7.5.5 Close the gas equipment valves. Ensure that the gas equipment valves are always closed and the regulators are set to zero outlet pressure when the equipment is not in use.

3.8 GAS CUTTING EQUIPMENT: ASSEMBLY AND IGNITING METHOD.

3.8.1 GAS CUTTING EQUIPMENT.

3.8.1.1 Gas cutting equipment is similar to those used in gas preheating, except for the heating attachment being replaced by cutting attachment.

3.8.1.2 Note: The nozzles, regulator and cutting torch attachments for LP-gas differs from those used for acetylene. A PV5 regulator is used on LP-gas equipment.

3.8.2 ASSEMBLY PROCEDURE AND TESTING.

3.8.2.1 The assembly procedure and testing for gas cutting equipment is similar to that of gas welding (Paragraphs 3.7.2 to 3.7.3).

3.8.2.2 LP-gas may not be allowed to flow from gas cylinders for long periods when assembling and testing is done. LP-gas is heavier than air, will accumulate in low-lying sections on the ground/floor, and could be set alight by sparks or hot metal.

3.8.3 IGNITING PROCEDURE.

3.8.3.1 The igniting procedure for a cutting torch is similar to that for a welding torch (Paragraph 3.7.4).

3.8.3.2 Note: The oxygen valve on the universal handle shall be opened completely and left open. Use the oxygen control valve of the cutting attachment to adjust the flame.

3.8.3.3 Use the oxygen control lever to control the oxygen high pressure flow. If the flow of cutting oxygen changes the flame composition, the flame shall be adjusted by means of the oxygen control valve on the cutting attachment.

3.8.4 SHUT-OFF PROCEDURE.

3.8.4.1 The shut-off procedure for gas cutting equipment is the same procedure as for gas welding (Paragraph 3.7.5).

3.8.5 GAS CUTTING PROCESS.

3.8.5.1 Mark the position where the rail needs to be cut with boilermaker's chalk.

3.8.5.2 Ensure that the appropriate fire fighting equipment is available and guidelines regarding the prevention of field fires are followed as discussed in Paragraph 2.6.

3.8.5.3 Rails may be cut with oxy-propane equipment when removing kick-outs.

3.8.5.4 Cutting settings for rails are similar to the settings for cutting 25mm thick plate. The following pressures are used in the gas cutting process: (The figures given are intended as guidance and may vary depending on local conditions).

(a) Oxygen regulator = 270 kPa for oxy-acetylene equipment, and
= 310 kPa for oxy-propane gas equipment.

(b) Acetylene regulator = 60 kPa (Ensure that a 2F cutting nozzle is used).

(c) LP-gas regulator = 60 kPa (Ensure that a 2NFF cutting nozzle is used).

3.8.5.5 Ignite the flame and adjust it to an equal mixture to obtain a neutral flame. A neutral flame is used for cutting rail.

3.8.5.6 Take up a comfortable position when cutting a rail.

3.8.5.7 Keep the tip of the cutting nozzle at a 60° angle, approximately 10mm above the rail flange until the colour of the metal turns cherry-red. Set the cutting lever to maximum to allow the high pressure oxygen to blow away the molten metal.

3.8.5.8 Move the nozzle down at a constant speed along the line mentioned in Annexure 2-2 to the bottom of the rail crown while the cutting nozzle is held approximately 10mm from the rail surface. The cutting nozzle shall be held at 90° to the rail surface to ensure a square cut. As soon as the rail crown is cut through, release the cutting lever to cut off the high oxygen pressure flow.

3.8.5.9 Clean the rail web and flange with a chipping hammer, and follow the above procedure to cut the rail flange and web.

CHAPTER 4 – METALLURGICAL GUIDELINES AND TESTS.

4.1 METALLURGICAL GUIDELINES.

4.1.1 INTRODUCTION.

4.1.1.1 Track welding is important for the following reasons:

- Converting jointed track to continuous welded rail.
- Wheel-spin burns and other surface damage can be repaired.
- The life span of rail and crossing components is extended.
- In order to achieve the above, it is important that we have to know more about metallurgical aspects, as well as the effect which the different welding procedures have on steel, especially regarding heat application and cooling rates.

4.1.2 HISTORY.

4.1.2.1 When iron ore is processed, iron (Fe) is the end product. For rail this product is further processed and elements such as carbon, manganese, silicon, chrome, nickel and molybdenum, sulphur and phosphorus are added. These elements are added to produce the required mechanical characteristics.

4.1.2.2 The earth's crust contains approximately 5% (mass/mass) iron in the form of iron ore. The most important ore in South Africa is hematite (Fe_2O_3), which contains elements such as phosphorus and silicon.

4.1.2.3 Iron ore, coke and limestone are fed into a blast furnace and heated by superheated air. Carbon monoxide and heat are generated by burning blast furnace coke (which is obtained from coal of a high quality) in a blast furnace. The iron ore is reduced to iron by the carbon monoxide. The limestone reacts with the impurities in the iron ore to form a molten slag that floats on the surface of the molten metal.

4.1.2.4 Crude iron contains high percentages of carbon, manganese, silicon, phosphorus and sulphur and these elements shall be controlled within the specified limits to obtain the desired steel.

4.1.2.5 In modern steel works, crude iron is transported in a molten state to the refining plant, where it is refined. Older refining plants include the Bessemer converter and the open-hearth furnace. The Basic Oxygen Process (BOP) is the modern method of steel manufacturing.

4.1.2.6 Steel is also produced in an electrical oven by using steel scrap and a lesser quantity crude or cast iron.

4.1.2.7 In the BOP process, the ladle is loaded with molten metal and scrap metal at a ratio of 70/30. Oxygen is blown at high pressure into the surface of the molten crude iron. The oxygen reacts with the carbon, silicon, manganese and other undesirable elements. Limestone is added as a flux and removes the oxidised impurities as a molten slag, floating on the surface. After the final mixing process and the addition of the alloying elements, the molten steel is degassed to lower the level of hydrogen. The molten steel is then cast into moulds for subsequent manufacturing processes.

4.1.2.8 Two processes are used for the casting of the molten metal, namely the ingot process and the continuous-casting process. Currently only the continuous casting process is used to manufacture rails.

4.1.3 THE IRON/CARBON PHASE DIAGRAM.

4.1.3.1 The iron/carbon phase diagram (Figure 4.1) shows the influence of carbon as an alloying element on the metallurgical structure of the steel.

4.1.3.2 The phases pictured by the diagram are:

- AUSTENITE - A solid solution of Carbon in Iron at a high temperature (723°C for 0.8% Carbon).
- PEARLITE - Is a eutectoid composition of Ferrite and Cementite.
- FERRITE - Almost pure iron with little Carbon (< 0.025%). It is soft with a low tensile strength.
- CEMENTITE (Iron Carbide) - A solid solution of Iron and Carbon (6.67%). It is very hard and brittle.
- MARTENSITE - An over-saturated solid solution of Carbon in Ferrite that has high internal stresses is very hard and brittle.

4.1.3.3 A Pearlitic microstructure provides the best wear resistance and therefore it has the desired micro-structure for a rail.

4.1.3.4 For a rail's microstructure to change to Austenite, it shall be heated to between 750º and 1000ºC. Pearlite, Martensite or Bainite or combinations of these can form, depending on the cooling rate.

4.1.3.5 The chemical composition of Cr-Mn and UIC-C rails is such that Pearlite forms directly from the Austenite phase. (Maximum Carbon content of the rails is 0.8%).

4.1.3.6 If uncontrolled cooling is applied, Martensite will form.

4.1.4 CONTINUOUS COOLING TRANSFORMATION (C.C.T) DIAGRAM.

4.1.4.1 Each rail grade has its own continuous cooling transformation (CCT) diagram (Figure 4.2). The CCT diagram is influenced by the chemical composition.

4.1.4.2 If cooling takes place according to curve 1 or 2, as in Figure 4.2, Pearlite will form. If cooling takes place according to curve 3 or 4, Bainite or Martensite will form respectively.

4.1.4.3 The temperature and cooling rate that is obtained in the HAZ (heat-affected zone) of the joint are determined by the heat input during the welding cycle. In the case of a flash butt welding process, the heat input is local and over a shorter time span. In the case of exothermic casting the heat input is over a longer period. In the case of welding on Cr-Mn and UIC-C rails, the cooling rate is retarded during both welding processes to prevent Martensite formation. The cooling rate of completed exothermic joints can be retarded by insulation by means of an insulating blanket. In the case of flash butt welding, the cooling rate is retarded by means of a flame.

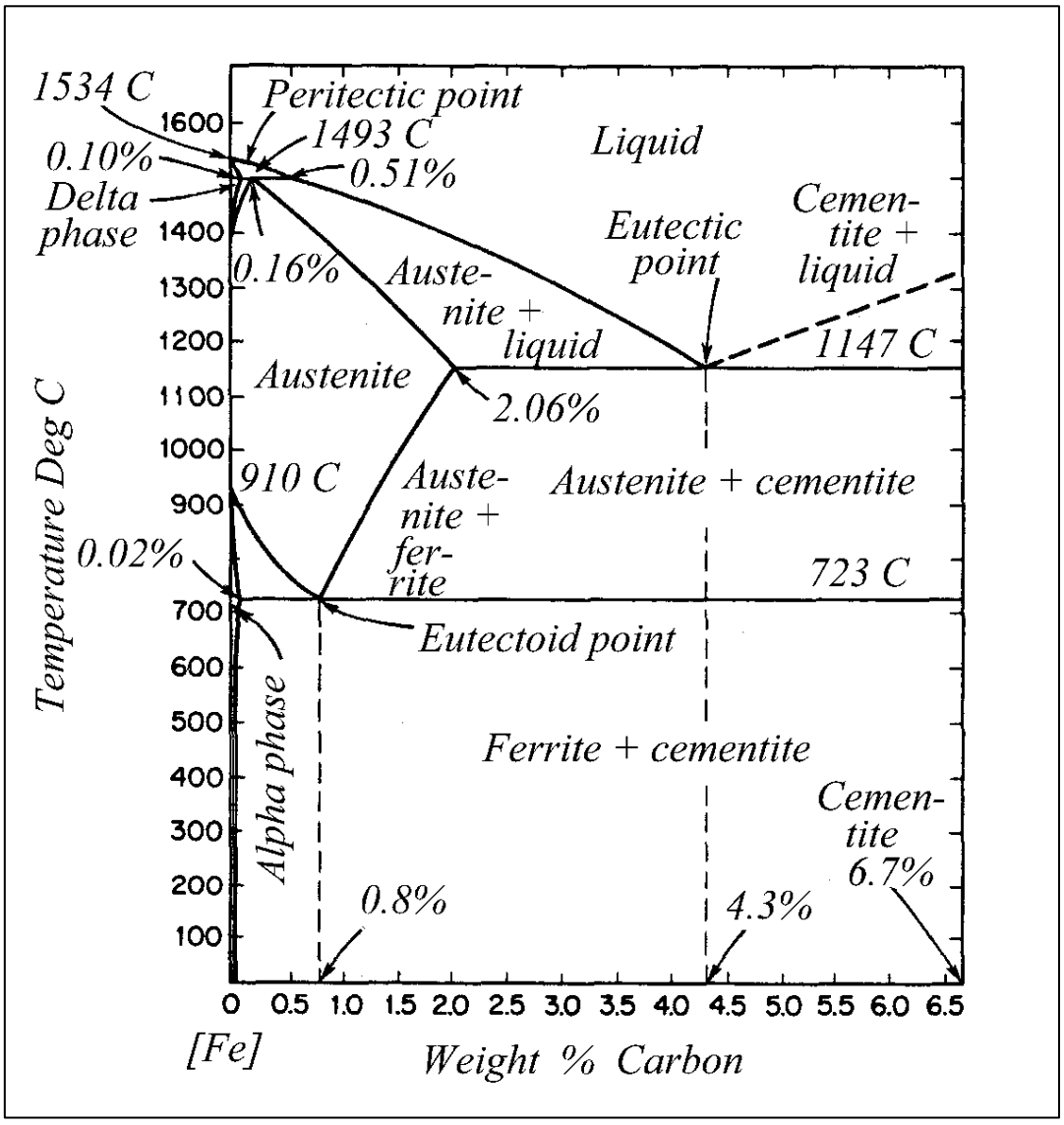

Figure 4.1. Iron/Carbon Phase Diagram.

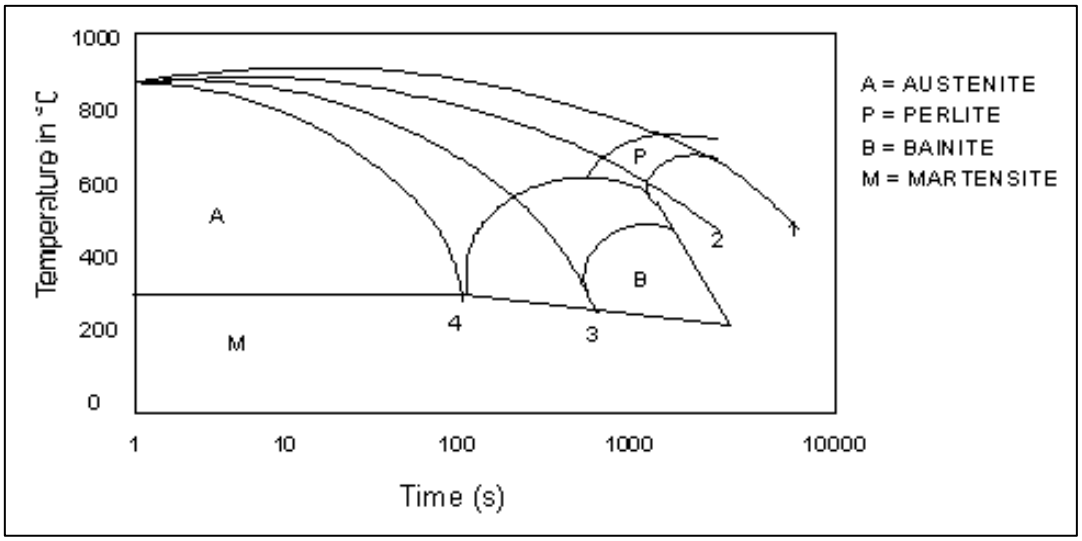

Figure 4.2. Continuous Cooling Transformation (CCT) Diagram for UIC-B Rail.

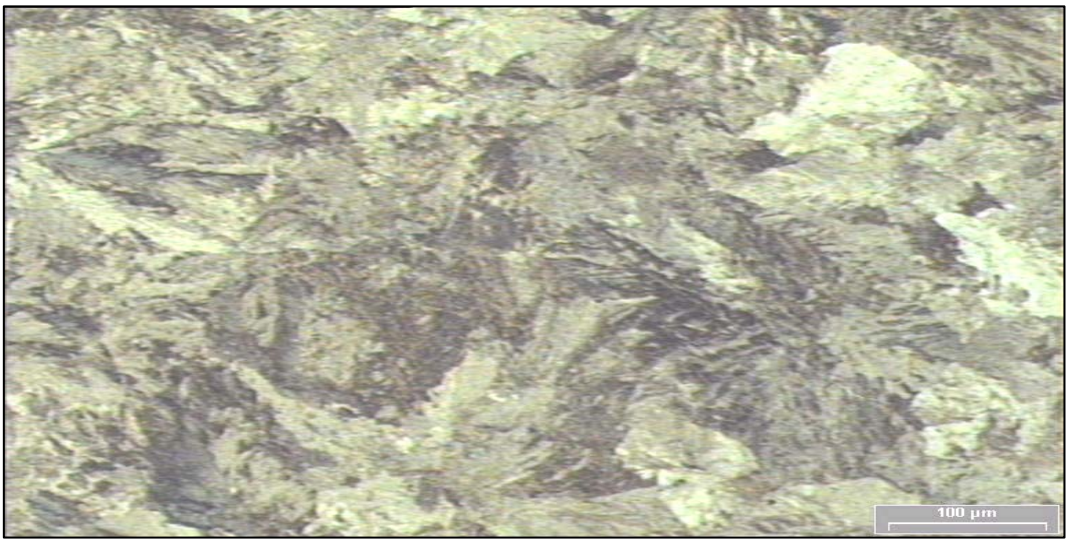

Figure 4.3. Pearlite (Note difference in grain size).

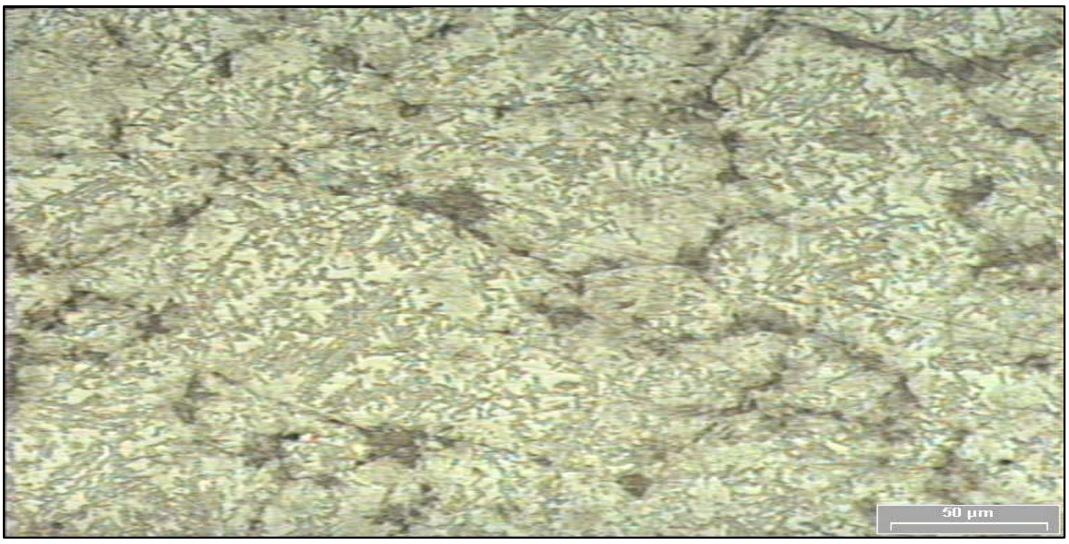

Figure 4.4. Bainite.

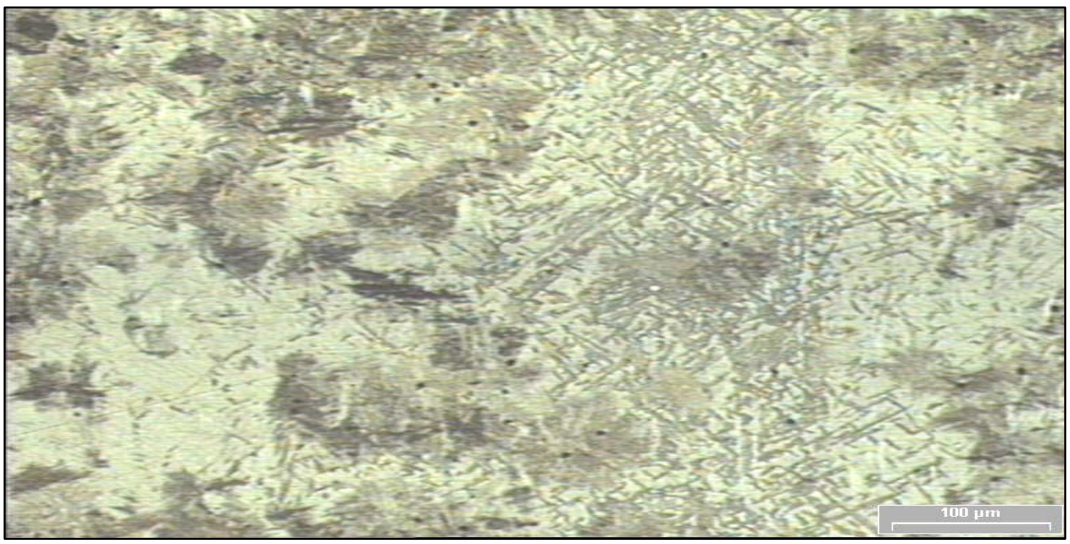

Figure 4.5. Martensite.

4.1.5 TIME/TEMPERATURE TRANSFORMATION (TTT) DIAGRAM.

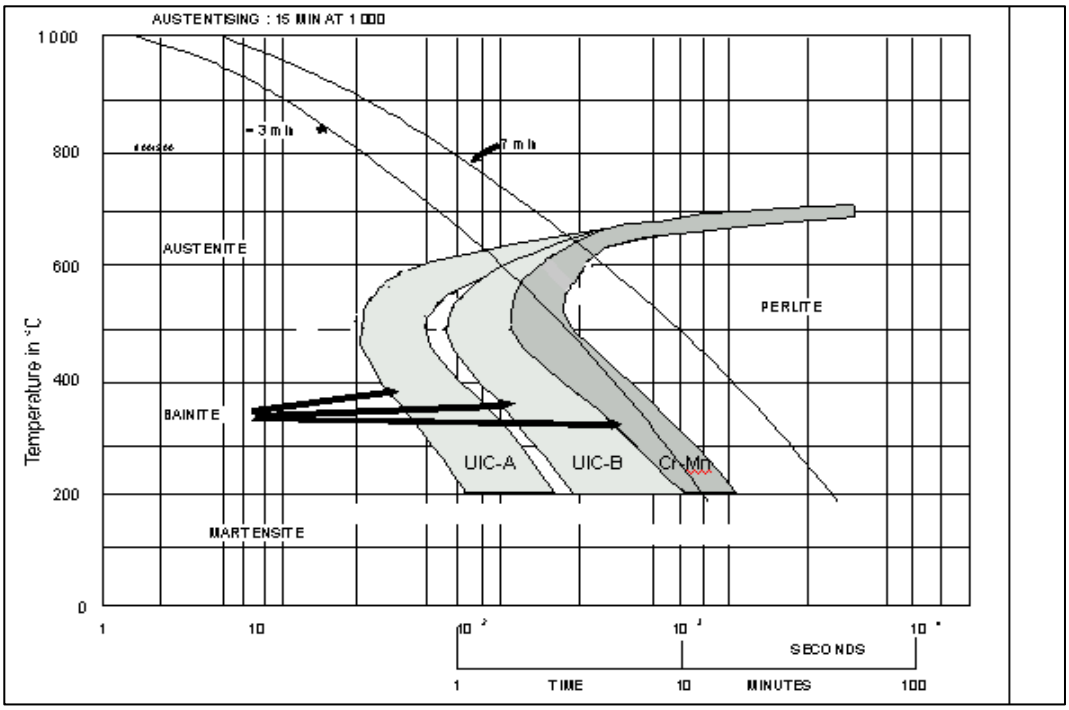

Figure 4.6. Time/Temperature Transformation (TTT) Diagram.

4.1.5.1 The time/temperature transformation (TTT) diagram (Figure 4.6) shows the time needed for a given type of steel to transform from a specific austenising temperature to different crystal structures. In the case of rail steel, the Pearlite transformation time is of special importance, and also the time for transformation to Bainite or Martensite.

4.1.5.2 Manganese as well as Chrome, as in the case of Cr-Mn rails, result in the transformation times being delayed, while the spacing of lamination bands of Pearlite are made narrower (fine Pearlite is formed).

4.1.5.3 The TTT diagram above shows the time/temperature transformation curve for UIC-A, UIC-B and Cr-Mn steel.

4.1.5.4 The two recommended cooling curves for UIC-A, UIC-B and Cr-Mn steel respectively are shown on the diagram. Complete Pearlite is obtained namely 3 minutes for UIC-B steel and 7 minutes for Cr-Mn steel.

4.1.5.5 From the above it can be seen why post heating on Cr-Mn and UIC-C rails must be applied. For UIC-A and UIC-B rail, the preheating and welding temperatures are sufficient to ensure that only Pearlite is formed.

4.1.5.6 In the case of a Cr-Mn rail, retarded cooling (flame heating/insulating blanket) after welding is required to ensure 100% Pearlite transformation. If preheating blocks are used, insulation with a heat resistant blanket is required. Retarded cooling by means of flame

heating for 8 minutes or in case of preheating blocks insulation with an insulating blanket is required.

4.1.6 MACRO STRUCTURE.

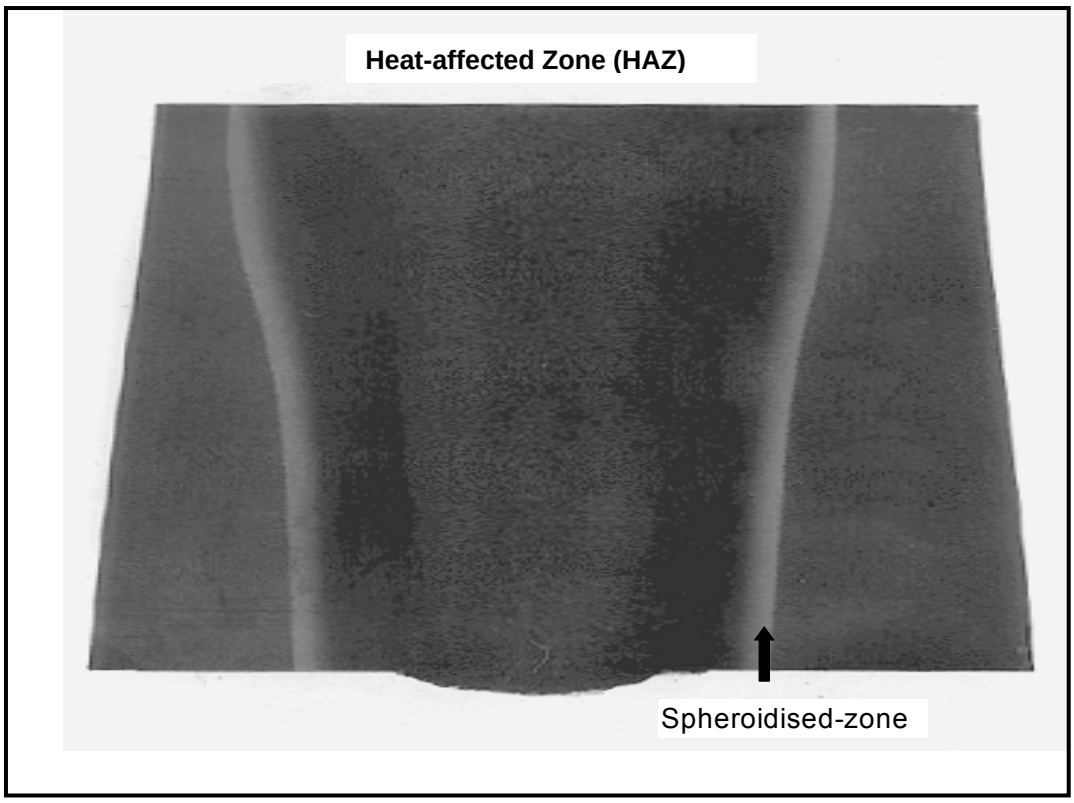

Figure 4.7. Cross Section of Exothermic Joint.

4.1.6.1 Figure 4.7 shows a macroscopic section through an exothermic joint. The Heat-affected Zone (HAZ) is the area in the rail directly next to the fusion zone and varies in width depending on the heat input (temperature and time duration) of the casting process.

4.1.6.2 The spheroidised zones can also be identified. These are the outside edges of the HAZ and are softer than the original rail steel. Spheroidising of the Pearlite takes place in the temperature range 680 to 723°C and results in a decrease in hardness of the rail steel.

4.1.6.3 The area between the spheroidised zone and the fusion line was heated above 723°C. The higher temperature next to the fusion line led to grain growth here and the grains become progressively finer until the spheroidised zone is reached. These cause variations in the hardness values, which differ from those of the parent metal.

4.1.6.4 Defects such as porosity, slag or segregation can also be observed on the macroscopic section.

4.1.7 MICROSTRUCTURE.

4.1.7.1 The majority of rail steel is Ferritic/Pearlitic Carbon steel.

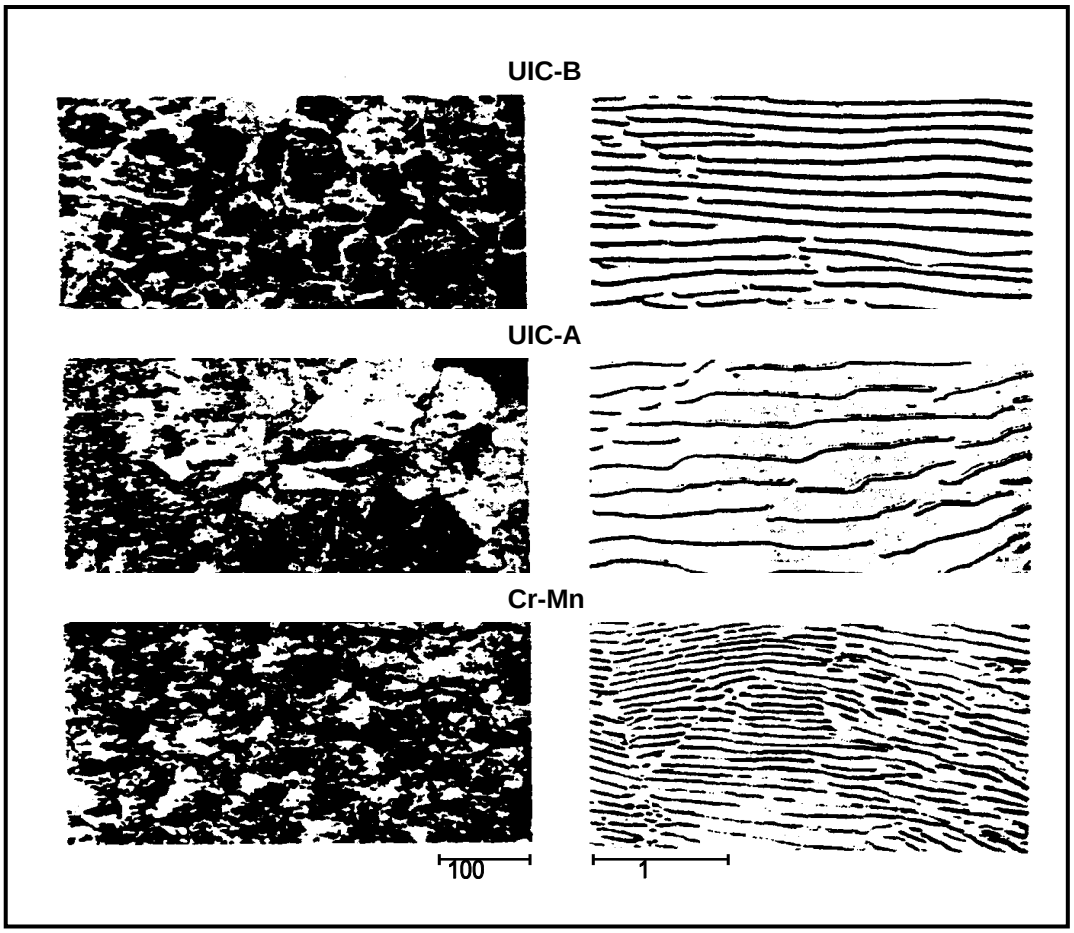

Figure 4.8. Typical Pearlite Microstructure.

4.1.7.2 The Pearlite will be coarse or fine, depending on the chemical analyses and the cooling rate from the austenitic region during manufacture or welding processes. Figure 4.8 shows the coarseness of the Pearlite for three different grades of rails. Note: The finer the Pearlite, the harder the steel.

4.1.7.3 Figure 4.9 shows the change in the microstructure and hardness of a flash butt joint as a result of the heat addition during the welding process.

4.1.8 ROLL MARKS.

4.1.8.1 Before welding is done on any rail, the Track Welder must first check which type of steel it was manufactured from (Annexure 4-1, Identification of Rail Types (Roll Marks for Rails)).

4.1.8.2 Where rails have been painted silver or aluminium, it is an indication that the rail has been manufactured from chrome manganese steel, although positive identification by means of roll marks is very necessary.

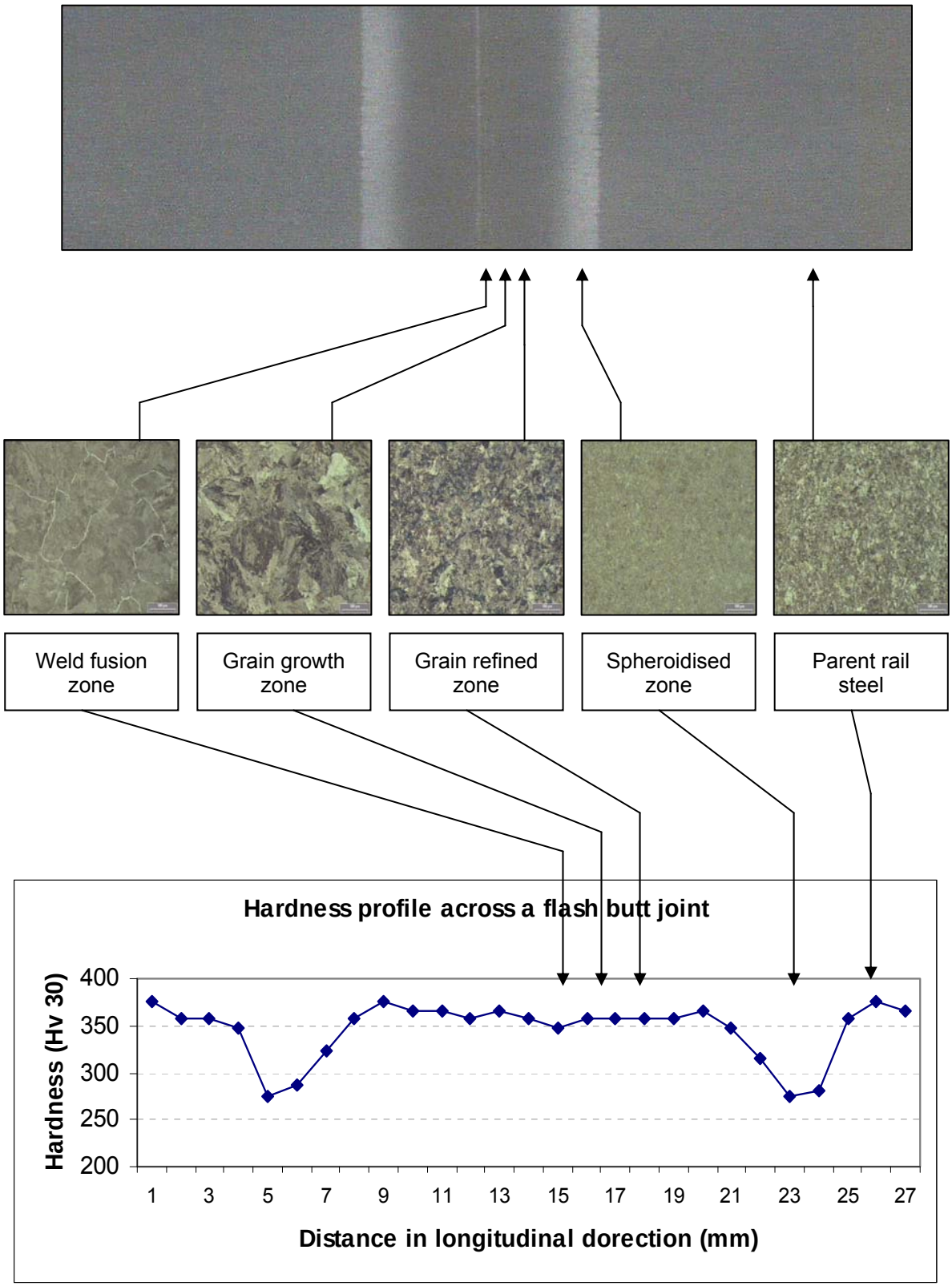

Figure 4.9. HAZ Microstructure and Hardness Values of a Flash Butt Joint.

4.2 METALLURGICAL TESTS.

4.2.1 LABORATORY TESTS: RAILWAY ENGINEERING (RAIL TECHNOLOGY).

Transnet Freight Rail has a fully equipped laboratory at Koedoespoort, which can conduct the following tests:

- Suitability tests of new materials.
- Acceptability tests for electrodes and acceptance of new procedures.
- Research and development of new processes.
- Cause determination of defects and fractures and assistance in preventing future problems.
- Quality assurance of present processes and procedures.

The laboratory can also assist with the following:

- Determining whether the correct welding procedures had been followed.
- Determining whether the prescribed welding procedures had been deviated from.
- Determining if the pre-heat and post-heat procedures for the specific activities and grade of rail had been applied.
- Determining whether defects had its origin in the rail steel or welding material.

4.2.1.1 TEST SPECIMENS.

Test specimens which are forwarded to the laboratory for tests, shall conform to the following:

- Rail of 150mm shall be left on both sides of the outsides of any joint or defect, which shall be tested.
- In the case of a broken rail, both ends of the fracture shall be supplied. The rails shall be cut a minimum distance of 75mm from either side of the rail ends. No flame cutting allowed within 150mm from any fracture surface or defect
- Test specimens shall be protected against rain and other corrosive elements.
- No attempt shall be made to remove rust or other foreign materials
- All test specimens shall be clearly marked. A full report, with information of the derailment, fractures, place, time, temperature, date, welding gap, high or low leg, welding process, roll marks, or any other information, shall be forwarded with the test specimen.
- The test and information required shall be clearly stated.

4.2.1.2 MACROSCOPIC EXAMINATIONS.

Macroscopic investigations determine:

- The effectiveness of pre- and post heating (HAZ).
- The quality of the welded joint, in other words the presence of cracks, porosity, slag inclusions, lack of fusion, foreign matter and materials, as well as the welding technique which was used.

4.2.1.3 MICROSCOPIC EXAMINATIONS.

4.2.1.3.1 From the microscopic examination the same can be determined as with the macroscopic examination, but in much finer detail. The microstructure can be examined under magnifications of 50 to 1000 times.

4.2.1.3.2 It shows the metallurgical grain structure of the rail as well as the welding deposit.

4.2.1.4 HARDNESS EXAMINATIONS.

4.2.1.4.1 The hardness examination is done on any cut through the rail, generally on the same sample used for the macroscopic examination:

4.2.1.4.2 Hardness can be measured in any of the following units: Brinell (HB 10/3000), Vickers (HV) and Rockwell (HRc).

4.2.1.4.3 From hardness examinations the following can be determined:

- Hardness and therefore the type of the rail
- Hardness of the welding metal
- Hardness of the heat-affected zone
- Size of the heat-affected and other zones.

4.2.1.4.4 Different hardness is obtained with the different types of rails, such as:

- HCOB 240
- UIC-A 280
- UIC-B 300
- Cr-Mn 320
- UIC-C (2MCC) 320 to 340
- Head hardened 350 to 400

4.2.1.4.5 Hardness measurements are conducted across the welded area to obtain a hardness profile of the welded area. This profile is valuable in determining the quality of the joint.

4.2.1.5 CHEMICAL ANALYSIS.

4.2.1.5.1 A chemical analysis can be done on the rails and welding metal to ensure that these conform to specifications.

4.2.1.6 SCANNING ELECTRON MICROSCOPE (S.E.M.).

4.2.1.6.1 If problems are experienced to determine the origin and cause of the fracture, the fractured parts can be examined with the S.E.M. This microscope can enlarge fractured faces up to approximately 300,000 times.

4.2.2 NON-DESTRUCTIVE TESTS.

Non-destructive tests are used to determine the quality of welded joints and/or rails without damaging them. Ultrasonic testing, radiography and dye penetrant testing methods are used.

4.2.2.1 RADIOGRAPHS.

4.2.2.1.1 Radiography can be accomplished by using either an isotope or an X-ray tube to bombard the joint with radiation. This will achieve an image on a radiographic film. The difference in densities of the image, which was generated from the joint, will illustrate the soundness of the joint. Imperfections, like shrinkage cavity, lack of fusion, porosities and cracks will appear much darker than the cast material on the radiographic film.

4.2.2.2 X-RAYS.

4.2.2.2.1 The x-ray equipment used is only an industrial version of the one used in a doctor's or a dentist's office. An electron gun inside the tube shoots high-energy electrons at a target made of heavy atoms, such as tungsten. X-rays come out because of atomic processes induced by the energetic electrons shot at the target.

4.2.2.3 GAMMA RADIATION.

4.2.2.3.1 High-energy, short wavelength electromagnetic radiation emitted from the nucleus of an atom. Gamma rays are very penetrating and are shielded by dense materials such as lead. A Collimator, which is a device made from radiation absorbent material such as lead or tungsten is designed to limit and define the direction and angular divergence of the radiation beam.

4.2.2.3.2 Both these above-mentioned forms of radiation are use to inspect the joint in similar ways. The film is placed at the bottom of the rail and a shot is taken in position A and position B (Figure 4.10). The film is then removed and another film is placed against the web of the rail and a shot is taken from Position C (Figure 4.10).

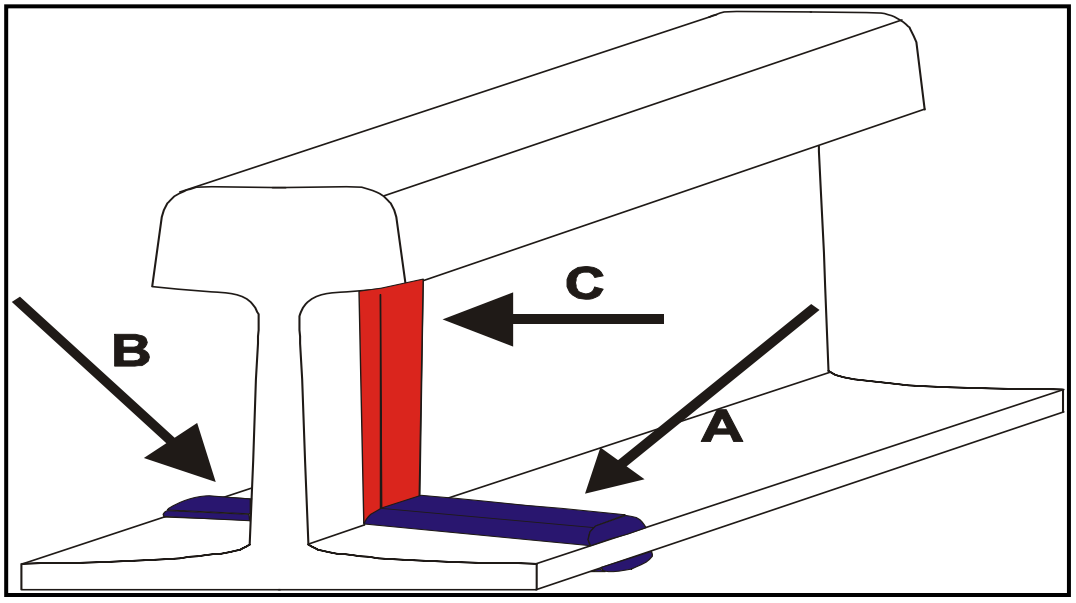

Figure 4.10. Different positions of the source or X-ray tube to radiograph joints.

4.2.2.3.3 This method allows us to inspect mostly the whole joint area, except the crown part. The crown can now be evaluated using ultrasonic equipment. Illustrated in (Figure 4.11) and (Figure 4.12) are the different positions of an X-ray tube where an exothermic joint is being inspected. (Figure 4.13 is a setup of an isotope to radiograph the web area of the rail).

Figure 4.11. Rail Flange X-ray Setup.

Figure 4.12. Rail Web X-Ray Setup.

Figure 4.13. Setup of Isotope to Radiograph the Rail Web.

4.2.2.3.4 Figures 4.14 and 4.15 are illustrations of radiographic images. Figure 4.14 illustrates the one side of the flange of a rail and Figure 4.15 is an image of the web area of the rail. The darker areas represent less material, which indicate the defects in the joint. The particular joint in Figure 4.14 illustrates a lack of fusion between the rail metal and the cast material, and Figure 4.15 is what is called worm holing, which are gas pores that are trapped in the cast metal.

Figure 4.14. Lack of Fusion in the Rail Flange.

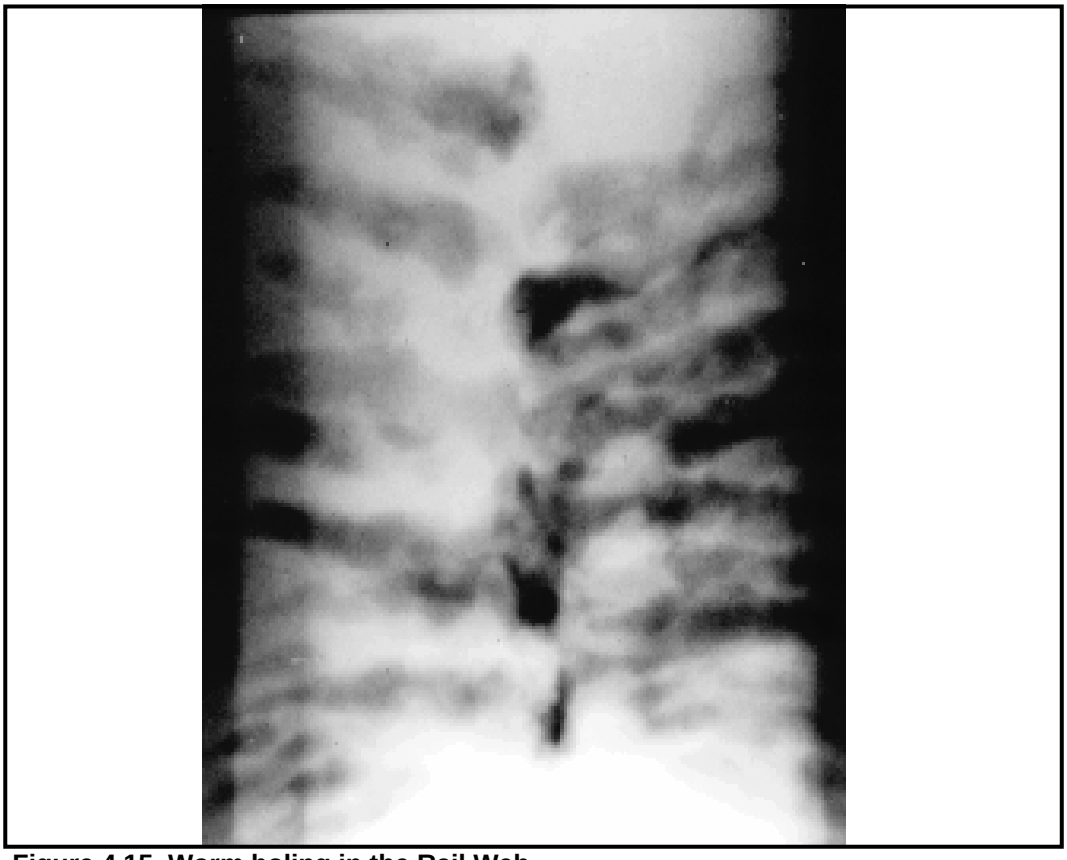

Figure 4.15. Worm holing in the Rail Web.

4.2.2.4 ULTRASONIC TESTING.

4.2.2.4.1 Ultrasonic testing is a versatile inspection technique, which can be used to inspect a variety of metallic and non-metallic products such as welds, forgings, castings, sheet, tubing, plastics and ceramics.

4.2.2.4.2 Ultrasonic testing is high frequency sound waves that have the advantage of detecting subsurface defects with access to only one side of the specimen.

4.2.2.4.3 A transducer or probe is used to detect these discontinuities. The transducers produce the sound waves that detect the defects and an instrument or flaw detector is used to interpret the signals from the transducers.

4.2.2.4.4 The defect orientation is very important and could easily be missed if it is not perpendicular to the sound propagation of the probes (Figure 4.16). The 0º probe signal will be deflected because of the crack orientation, but the defect that is detected by the 70º probes will be reported.

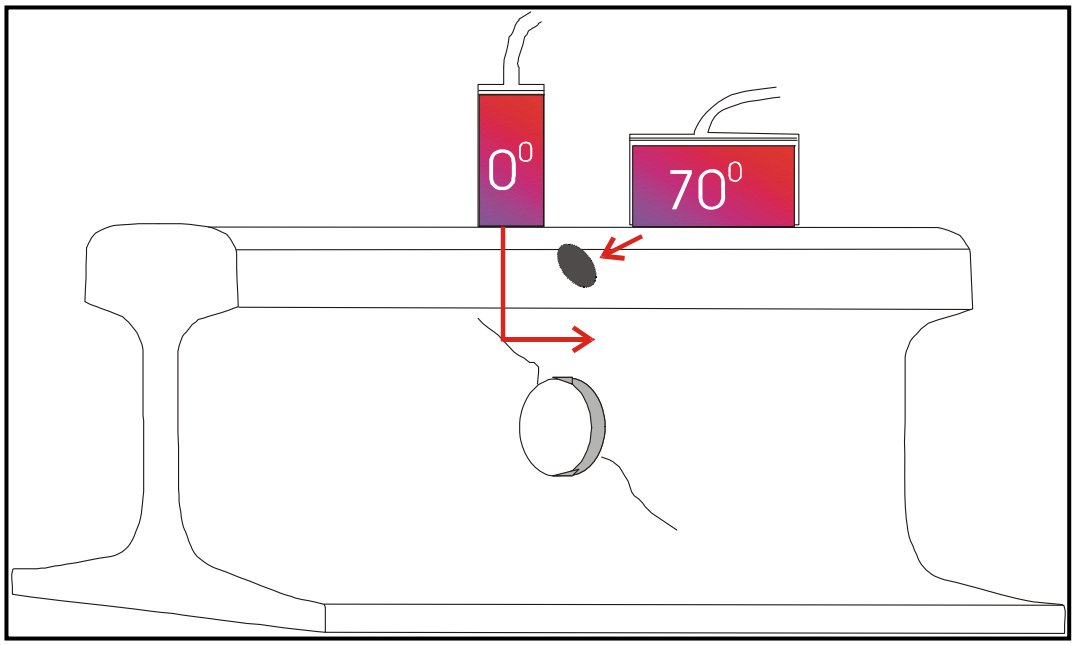

Figure 4.16. Defect Orientation.

4.2.2.4.5 Currently, ultrasonic test cars and ultrasonic trolleys are used to detect defects in the rails. Defects like kidney type (G4), which develop at an incline, are detected with angular probes, and horizontal split head defects are detected with normal or 0º probes.

4.2.2.4.6 It is evident that the more transducers or probes that is used in the testing equipment, the higher the accuracy would be in detecting discontinuities. The ultrasonic trolleys (Figure 4.17) only have two 70º probes (forward and backward) to check for defects in the crown area, and a 0º probe to detect defects up to the bottom part of the rail.

4.2.2.4.7 The wheel probe that is in use in the ultrasonic cars makes it possible to have up to 11 probes inspecting the rail simultaneously. In Figure 4.18 the wheel probe is illustrated with 3 different types of probes, a 37º probe is added to detect bolthole cracks. This makes the ultrasonic cars much more effective than the trolleys by testing rails in track. It shall be considered however that the car can only move on railway lines, and testing individual rails like closures would still be done with the ultrasonic trolleys.

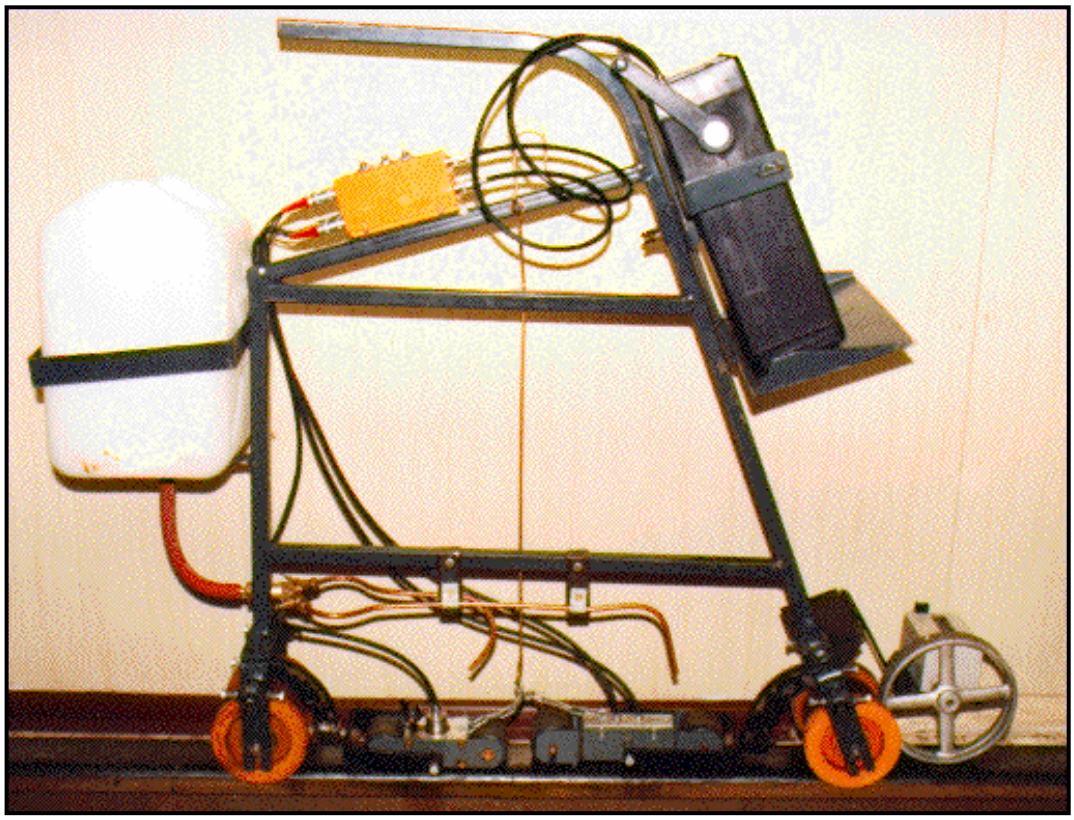

Figure 4.17. Ultrasonic Test Trolley.

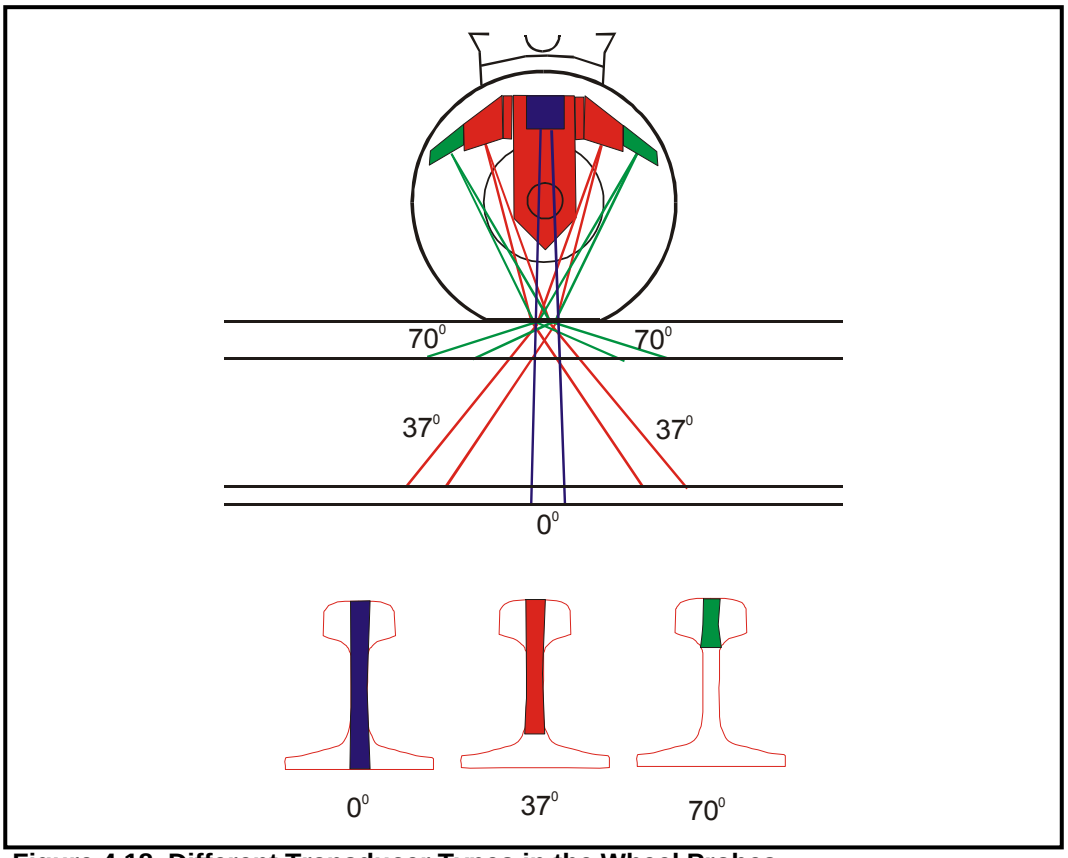

Figure 4.18. Different Transducer Types in the Wheel Probes.

Figure 4.19. Wheel Probes on the Ultrasonic Measurement Car (UMC).

4.3 CHARACTERISTICS OF RAILS.

4.3.1 The main alloying elements in rail steel are carbon, manganese and silicon. The more carbon, the harder the rail and the more difficult it becomes to do welding without adversely affecting the characteristics of the rail. Other alloying elements such as chrome and manganese are also present in rail steel. These elements influence the welding technique.

4.3.2 Different grades of rails are used, namely HCOB, (MMOB, MMOA), UIC-A, UIC-B, 2MCC (or UIC-C), UIC60, Cr-Mn and head hardened rails.

4.3.3 The chemical composition and manufacturing method influence the following properties:

- Impact strength (toughness of steel).
- Hardness (tensile strength determines the wear resistance).

4.4 FLAME CUTTING.

4.4.1 Flame cutting of rails lead to the following defects:

- Oxides are formed on the cut surface and results in insufficient fusion when welding.
- Hardening of the rail end because of quick cooling.
- Small hair-line cracks also appear.
- Embrittling of the rail in the immediate vicinity of the cut if flame cutting takes too long.

4.4.2 To prevent these defects mentioned above, all rails shall be cut with a disc cutting machine.

4.4.3 NOTE: UIC-C (2MCC) and Cr-Mn rails may not be flame-cut.

4.5 GRINDING.

4.5.1 When grinding is done, precautions shall be taken that the correct grinding wheel is used and overheating is avoided by pressing the grinding wheel only very lightly against the work piece during grinding. The material shall under no circumstance be transformed to a blue colour, because it may cause the following:

- Hardening, i.e. hairline cracks will form.
- Poor fusion during welding.

4.6 DISC CUTTING.

4.6.1 When disc cutting is done on rails, the following shall be checked to ensure that the rail characteristics are retained:

- That the revolutions of the disc cutting spindle correspond with the disc cutting specifications.
- That too much pressure is not placed on the machine.

4.7 PRE- AND POST HEATING.

4.7.1 Preheating is necessary to ensure sufficient fusion between the parent metal and welding metal, to counter sagging (distortion) and to prevent formation of Martensite.

4.7.2 Delayed cooling after welding or post heating is done to prevent the formation of untempered Martensite in the parent metal after welding. This is done by delaying the rate of cooling.

4.7.3 Untempered Martensite tends to form cracks under traffic, which leads to metal breakout and possible rail fractures.

4.8 DEFECTS.

4.8.1 The following types of rail fractures may occur if the prescribed welding procedures are not followed:

- Exothermic joint breaks right through.
- Rail breaks next to an exothermic joint.
- Crossing nose breaks.
- Wing rail breaks.
- Switch blade breaks.
- Welded up wheel-spin burn breakout.
- Breakouts, which appear on crossings, battered rail ends, wheel-spin burn repairs and switch blades.

4.9 ELECTRODES.

4.9.1 The chemical composition of electrodes determines whether the microstructure of the welding deposit will be Austenite, Pearlite or Martensite. Ensure the correct electrode is used for each process.

4.9.2 The flux coating covering the electrode contains the alloy elements that will determine the microstructure. Damaging the coating will thus have a detrimental outcome on the welding deposit.

4.9.3 Only electrodes, which have been tested and approved, may be used.

4.9.4 Electrodes approved for use are displayed in Annexure 4-2.

4.9.5 To ensure that the required welding deposit is obtained, the following shall be done:

- Electrodes shall be kept dry.
- The prescribed electrodes shall be used for specific activities (Annexure 4-2).
- The prescribed welding current shall be used; as prescribed by the manufacturer.
- The prescribed welding procedures strictly adhered to.

4.9.6 If the above-mentioned is not applied, it may cause:

- Undercutting.
- Formation of cracks such as under-bead cracking and toe cracking in the rail.
- Formation of cracks in the welding joint.
- Porosity in the welding metal.
- Metal spatter.
- Wasting of electrodes, as they will melt too quickly.

4.9.7 Only the number of electrodes that are necessary for a certain shift shall be issued.

4.9.8 Electrodes shall under no circumstances be subjected to the outlet gasses of welding machines, or come into contact with grease, oil or fuel. Electrodes shall be dried before use in suitable ovens at a temperature of at least 350°C for two hours, or 250°C, for three hours. Afterwards they shall be kept at 100°C until they are used. This process is important, as it will eliminate the hydrogen intake in the parent metal (or HAZ) just underneath the metal deposit. Electrodes shall not be dried more than three times. The flux coating will crumble when dried repeatedly.

4.10 FLUX-CORED WIRE.

4.10.1 The chemical composition of the flux-cored wire determines if the microstructure of the welding deposit will be Austenite, Pearlite or Martensite. Ensure the correct flux-cored wire is used for every process.

4.10.2 As different microstructures could be obtained during the welding process, it is of utmost importance that any previous welding deposit of unknown microstructure be removed; otherwise the required welding deposit will not be obtained. The flux core of the flux-cored wire contains the alloy elements, which will determine the microstructure. Damage to the flux will thus have a detrimental outcome on the welding deposit.

4.10.3 Only approved flux-cored wire may be used (Annexure 4-2).

4.10.4 Flux-cored wire shall always be kept dry and stored in a dry place. Flux-cored wire shall be kept in the original packaging for as long as possible before use. Exposure of flux-cored wire to the atmosphere could lead to rusting. This condition reduces the effectiveness of surface lubricating and lead to clogging of the wire feeder, supply cable or pistol (rust causes oxide inclusions). Flux-cored wire has a seam in the longitudinal direction through which moisture could also be absorbed. For this reason it shall be kept dry. The reel with the flux-cored wire shall be removed from the welding machine before the welding machine is transported.

4.10.5 Flux-cored wire shall not be left in the wire feeder overnight and over weekends, but shall be stored in a dry place and in its original packaging.

4.10.6 To obtain welds of a high quality when welding with flux-cored wire, the following points shall be observed:

- The distance between the rail and the contact tube shall be at least 30 - 35mm at all times. This influences the constant voltage.
- When welding manually, hold the welding gun at an angle of approximately 30° to the welding surface.
- When welding with semi-automatic equipment, the welding gun is held at an angle of 90° to the welding surface.

CHAPTER 5 – PRE- AND POST HEATING.

5.1 GENERAL.

5.1.1 Preheating of rails (Pearlite steel) shall be done before any welding commences. The reason for this is to prevent:

- Adverse metallurgy (Martensite formation).
- Distortion and sagging of the rail.
- Ensure inadequate fusion between molten metal and base material.
- Formation of cracks.
- Hydrogen entrapment (To give hydrogen in rails manufactured prior to 1970 enough time to escape).

5.1.2 Preheating and controlled post heating is necessary when welding is done on Chrome-Manganese rails to prevent the formation of Martensite. (Post heating is retarded controlled cooling)

5.1.3 There are three approved preheating methods.

- Oxy-propane heating.
- Heating compound (powder/block).
- Petrol-air preheating (only for exothermic casting).

5.1.4 The maximum length and depth of a wheel-spin burn to be repaired is described in Chapter 7.

5.1.5 The area to be welded shall be free of moisture and oxides that may deteriorate the quality of the final product.

5.2 PREHEATING WITH OXY-PROPANE.

5.2.1 Preheating with Oxy-LP-gas shall be done with a neutral flame.

5.2.2 The heating tip (nozzle) shall not be held closer than 100mm from the rail. The inner cone of the flame may under no circumstances reach the rail.

5.2.3 For wheel-spin burns and battered rail ends, a double-head stainless steel tip tube with two 2H preheating nozzles must be used. For crossings, a 900mm stainless steel tip tube with a 3H heating nozzle must be used.

5.2.4 The rail area to be welded shall be heated gradually on both sides by alternately moving the flame to and fro over the flange, web and crown.

5.2.5 Rails differ in composition, and for that reason it is very important to correctly identify rails to ensure that the correct heat application is made.

5.2.6 See Table 5.1 for the recommended preheat temperatures for the different rail types. These temperatures shall always be monitored by means of temperature crayons or digital thermometers.

5.2.7 Temperature crayons are available to measure different temperatures, for example 100°, 150°, 200°, 300°, 400° and 550°C.

5.2.8 Rail temperatures shall be measured on the rail surface and not on the welded bead.

5.2.9 To test for the required heat, temperature crayons of the correct temperature range shall be pulled slowly over the heated surface. When the correct temperature is reached, the crayon will melt gradually. If the work piece is overheated, the crayon will melt very quickly. It is necessary to maintain the work piece at the correct preheating temperature.

5.2.10 When extensive welding is to be done, it is necessary to repeat preheating during the welding process to maintain the minimum preheating temperature.

5.2.11 Overheating shall be avoided and under no circumstances shall the prescribed maximum temperature be exceeded. The microstructure of rail steel changes at high temperatures, which will have damaging consequences.

Table 5.1. Recommended preheat temperatures for the different rail types.

RAIL TYPE	TEMPERATURE	
	MINIMUM	MAXIMUM
HCOB	200ºC	350ºC
UIC-A	400ºC	550ºC
UIC-B	400ºC	550ºC
UIC-C	400ºC	550ºC
Cr-Mn	400ºC	550ºC
350 LHT (HH)	400ºC	550ºC
14% Mn	Ambient	200ºC

5.3 PREHEATING WITH PREHEATING COMPOUND.

5.3.1 PREHEATING POWDER.

5.3.1.1 Setting up and loading clinker formers (Figure 5.1).

5.3.1.1.1 Fit the insulating blocks to the clinker formers (the insulating blocks may be rubbed gently to fit into the clinker former).

5.3.1.1.2 Fit the appropriate clinker former to each side of the rail, centrally to the area to be welded. Each clinker former is stamped with the relevant rail mass, e.g. 60kg/m.

5.3.1.1.3 Clamp the clinker formers to the rail, using a G-clamp. The Track Welder shall ensure that the clinker formers are aligned centrally and in line with the opposite former to the area to be welded.

5.3.1.1.4 Seal off the contact area where the clinker former makes contact with the rail by applying a sealing paste.

5.3.1.1.5 The Track Welder shall visually examine the assembly prior to pouring of the preheating powder, to ensure that the insulating blocks are in position and that the clinker formers are aligned correctly.

5.3.1.1.6 Each bag contains sufficient preheating compound to fill one clinker former.

5.3.1.1.7 The Track Welder shall blend each bag of preheating compound to ensure that the bag content is uniform.

5.3.1.1.8 The Track Welder shall slowly pour the contents of the bag into the clinker formers.

5.3.1.1.9 The Track Welder shall during the pouring of the preheating compound visually check the underside and sides of the clinker former to ensure that there are no run-outs.

5.3.1.1.10 The Track Welder shall stop pouring the preheating compound if the preheating compound leaks and seal the area of leakage.

5.3.1.1.11 Each clinker former shall be filled to the top.

5.3.1.1.12 Place two starter blocks in the preheating compound on each side of the rail. The top of each starter block must be exposed.

5.3.1.1.13 The ignition hole of the starter block shall face upwards and may not be covered with preheating compound, as this will affect ignition.

5.3.1.1.14 Any preheating compound shall be removed from the rail surface.

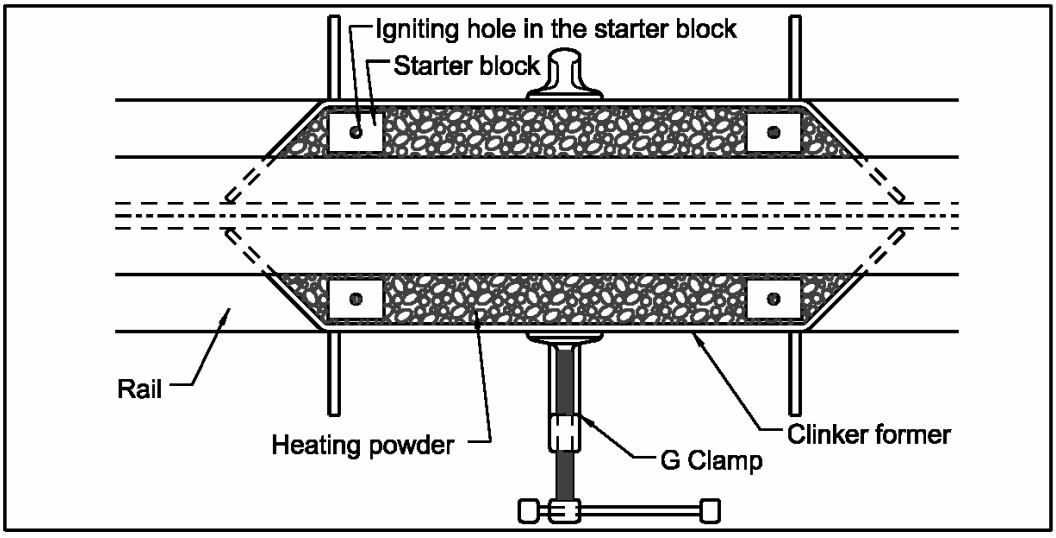

Figure 5.1. Position of Clinker Former

5.3.1.2 Igniting the preheating powder.

5.3.1.2.1 Start the preheating process by lighting the four starter blocks using igniters.

5.3.1.2.2 Cover the rail crown with an insulating material for at least 6 minutes as soon as the preheating powder has burnt out, to ensure that the correct temperature is reached before welding commences.

5.3.1.2.3 The total welding time may not exceed 10 minutes.

5.3.1.2.4 If the welding time on Cr-Mn rails exceeds 10 minutes, welding shall be stopped, the welded area covered with insulating material and the rail allowed to cool down to ambient temperature, after which another preheating powder kit shall be used.

5.3.1.2.5 Preheating using preheating powder kit on Cr-Mn rails are preferred to gas heating method.

5.3.1.2.6 Clinker formers shall be left in position for at least 30 minutes after welding is completed.

5.3.1.2.7 A wheel-spin burn may be heated with a single pair of clinker formers. When a wheel-spin burn is longer than 150mm, it shall be treated as two separate wheel-spin burns. The second half may only be treated when the rail has reached ambient temperature.

5.3.1.3 Cleaning of the rail.

5.3.1.3.1 After the welded area and rail has cooled down for 30 minutes under the insulating blanket, the clinker formers must be removed.

5.3.1.3.2 After the welded area has cooled to ambient temperature, all the burned powder on both sides of the rail shall be removed with a wire brush.

5.3.1.3.3 The clinker formers can be cooled under running water once they have been removed from the rail using a hammer and chisel to clean the clinker former.

5.3.2 PREHEATING BLOCKS.

5.3.2.1 Setting up heating blocks (Figure 5.2).

5.3.2.1.1 Fit the appropriate heating block to each side of the rail, centrally to the area to be welded. Each heating block is stamped with the relevant rail mass, e.g. 60kg/m.

5.3.2.1.2 Fit the steel plates on either side of the heating blocks to prevent damage to the heating blocks by the G-clamp.

5.3.2.1.3 Clamp the steel plates and heating blocks to the rail, using a G-clamp, centrally to the heating blocks, without excessive force.

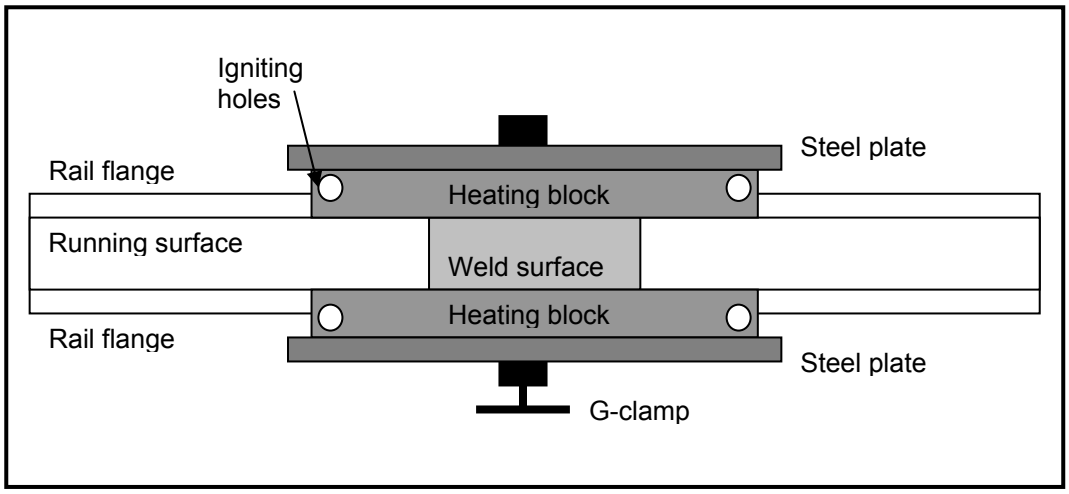

Figure 5.2. Position of Heating Blocks

5.3.2.2 Igniting the preheating blocks.

5.3.2.2.1 Ignite the heating blocks through all four igniting holes (one after the other in quick succession), using igniters, to start the preheating process.

5.3.2.2.2 Cover the rail crown with an insulating material for at least 6 minutes as soon as the preheating blocks have burnt out, to ensure that the correct temperature is reached before welding commences.

5.3.2.2.3 The total welding time may not exceed 10 minutes.

5.3.2.2.4 If the welding time on Cr-Mn rails exceeds 10 minutes, welding shall be stopped, the welded area covered with insulating material and the rail allowed to cool down to ambient temperature, after which the preheating process shall be repeated.

5.3.2.2.5 Preheating using preheating blocks on Cr-Mn rails are preferred to gas heating method.

5.3.2.2.6 Preheating blocks shall be left in position for at least 30 minutes after welding is completed.

5.3.2.2.7 A wheel-spin burn may be heated with a single pair of heating blocks. When a wheel-spin burn is longer than 150mm, it shall be treated as two separate wheel-spin burns. The second half may only be treated when the rail has reached ambient temperature.

5.3.2.3 Cleaning the rail.

5.3.2.3.1 After the welded area and rail has cooled down for 30 minutes under the insulating blanket, the heating blocks must be removed.

5.3.2.3.2 After the welded area has cooled to ambient temperature, both sides of the rail shall be cleaned with a wire brush.

5.3.2.3.3 The steel plates can be cooled under running water once they have been removed from the rail.

5.4 PREHEATING WITH A PETROL-AIR UNIT.

5.4.1 This method will only be used with exothermic casting (See Manufacturer's Operating Instructions).

5.5 POST-HEAT TREATMENT (RETARDED COOLING) USING OXY-PROPANE.

5.5.1 Retarded cooling is done to delay the cooling rate, and shall be commenced immediately after welding is completed.

5.5.2 Retarded cooling is a prerequisite when welding the following rail grades:

- Cr-Mn.
- UIC-C.
- 2MCC.

5.5.3 If the temperature in the rail drops to below 550ºC after welding work is completed, the welded area and the heating zone shall be heated to 550ºC and kept at that temperature for 8 minutes to prevent the forming of Martensite in the parent metal.

5.6 PREHEATING AND POST HEATING IN EXOTHERMIC CASTING.

5.6.1 Refer to Chapter 11.

CHAPTER 6 – PREVENTATIVE GRINDING.

6.1 GENERAL.

6.1.1 Metal flow is caused by interaction between wheel and rail.

6.1.2 Preventative grinding shall be done to extend the life span of track components.

6.1.3 Overlaps shall under no circumstances be removed by means of gas cutting.

6.1.4 Signalling staff shall be present when overlap grinding is done at switch blades and block joints. This enables safe working arrangements with CTC to switch blades in + or - position.

6.1.5 Protection for safe passage of trains shall be provided in accordance with Spoornet General Appendix No. 6 (Part 1) when preventative grinding is done on track.

6.2 GRINDING AND CUTTING EQUIPMENT.

6.2.1 A MC2 grinding machine with a harder grid grinding stone shall be used to remove the overlap and restore a 13mm radius. A 1:20 contour gauge with 13mm radius shall be used to monitor grinding standard.

6.2.2 An angle grinder with a 3mm cutting disc shall be used to open up splices, dovetails and expansion gaps.

6.2.3 A flap disc shall be used to remove metal flow scales on the rail crown.

6.3 GRINDING OF CROSSINGS.

6.3.1 GENERAL: CROSSINGS.

6.3.1.1 Remove overlaps and obtain a 13mm radius on the gauge corner on the following crossing components:

- Guard stock rail.
- Switch blades full bearing against the crown.
- Rails in a curve on low leg at welding activities.
- Closure rails in sets (turnouts, slips and diamond crossings).
- Insulated rail joints and all fishplate joints.
- Wing rails and nose.

6.3.1.2 Grind all metal flow and sharp edges on undercut profile of stock rail, and a 13mm radius from the trailing end of undercut for a length of 1.5m.

6.3.1.3 Remove any metal flow or sharp edges on the inside of switch blade, which fits to the stock rail, with an angle grinder.

6.3.1.4 After grinding work is completed, dye penetrant shall be used to check for any cracks that may have developed.

6.3.1.5 The planning staff shall indicate whether a Signals Technician is required to assist with switch blade repairs. E.g., where excess metal flow occurs and resetting of the set of points needs to be done.

6.3.1.6 Remove metal flow and flakes occurring on the running surface of the stock rail where train wheels transfer from switch blade to stock rail.

6.3.1.7 It is necessary to mark out dimensions with boilermaker's chalk, prior to grinding to ensure accurate grinding.

6.3.2 RAIL-MANUFACTURED CROSSINGS.

6.3.2.1 Cut a groove at 45° angles, 5mm deep between point and splice rail using an angle grinder with 3mm cutting disc.

6.3.3 RAIL-BOUND CROSSINGS.

6.3.3.1 Cut a groove at 45° angles, 5mm deep between splice rail and the casting insert (dove-tail) using an angle grinder with 3mm cutting disc.

6.3.3.2 Grind the total length between casting and connecting rails at 45° angles.

6.3.3.3 Grind a recess at the trailing side of the crossing (dovetail), no less than 5mm deep and 400mm in length in the direction of the nose, to accommodate false wheel flanges (Annexures 14-1 and 14-2; Indicated in Yellow). Use a MC2 grinding machine to grind these recesses. Grind away metal flow on the casting.

6.3.3.4 Restore the 1:20 cant as well as the gauge corner 13mm radius by means of grinding where sharp edges have formed.

6.3.3.5 The cast-insert-connection-with-splice-rail (dovetail) running surface, on both sides of the nose, shall be measured with a 1m straightedge and maintained in such a manner that it ensures smooth passage of trains.

6.3.3.6 All metal flow/flakes that may form on the cast wing shall be removed to provide a sound metal surface.

6.3.4 MONOBLOCK (14% MN) CROSSINGS.

6.3.4.1 Grind a recess at the trailing side of the crossing (dovetail), no less than 5mm deep and 400mm long in direction of the nose, to accommodate false wheel flanges and prevent metal flow (Annexure 13-1; Indicated in Yellow). Use a MC2 grinding machine to grind these recesses.

6.3.4.2 All sharp edges shall be restored to a 13mm radius.

6.3.4.3 All metal flow/flakes that may form on the cast wing shall be removed to provide a sound metal surface.

6.4 RAIL ENDS AND INSULATED RAIL JOINTS.

6.4.1 Expansion gaps shall be repaired before metal flow exceeds 2mm.

6.4.2 A cutting disc shall be positioned in such a manner, that both sides of the expansion gap are square after cutting and 10mm deep.

6.4.3 Metal flow at insulating joints shall be repaired in the presence of a Signals Technician, due to following procedural factors:

- The insulating T-piece consisting of two parts, to be removed and replaced.
- Metal flakes and grinding sparks may cause short circuits.

6.5 STANDARDS AND TOLERANCES.

6.5.1 Standards and tolerances as prescribed Chapters 7 to 14 of this manual shall be complied with once preventative grinding is completed.

CHAPTER 7 – REPAIRING WHEEL-SPIN BURNS.

7.1 GENERAL.

7.1.1 Wheel-spin burns (skid marks) are caused by stationary or near stationary locomotive traction wheels, which rotate faster than the actual movement of the locomotive.

7.1.2 Metal breakouts from the rail crown at wheel-spin burn locations and surface defects are aggravated as result of the dynamic impact caused by traversing wheels.

7.1.3 Wheel-spinning induces heat to the rail at a very high rate. A small area is affected during wheel-spinning, resulting in rapid cooling and the microstructure of the rail transforming to Martensite.

7.1.4 Martensite is a very hard and brittle microstructure. Hairline cracks develop resulting in breakouts and surface defects.

7.1.5 The importance of the removal of wheel-spin burns is dependent on various factors:

- type of rail
- axle mass
- type of traffic
- speed
- tonnage
- depth of the wheel-spin burns.

7.2 INSPECTION AND DECISION-MAKING.

7.2.1 The Depot Engineer shall lay down a policy for his Depot regarding the repair of wheel-spin burns.

7.2.2 The workload of wheel-spin burns shall be determined either by foot or trolley inspections.

7.2.3 Prioritising and planning shall be done in conjunction with track maintenance staff.

7.2.4 Wheel-spin burns up to 1mm deep may be repaired by grinding alone. Wheel-spin burns deeper than 1mm shall be repaired by grinding and welding.

7.2.5 Wheel-spin burns deeper than 6mm shall preferably be replaced by inserting a closure rail.

7.2.6 Where more than two wheel-spin burns appear within 1m on the same rail, the welding process shall be performed using a staggered method irrespective of the preheating method used.

7.3 PROTECTION.

7.3.1 The Track Welder shall ensure that protection is applied in accordance with Spoornet General Appendix No 6 (Part 1) before repair work is commenced.

7.3.2 Wheel-spin burns may be repaired between trains or under total occupation.

7.4 FIRE PREVENTION.

7.4.1 Safety aspects regarding fire prevention shall be adhered to at all times (Chapter 2).

7.5 PREPARATION.

7.5.1 PREPARATION BY TRACK PERSONNEL.

7.5.1.1 The following preparation work, as described in the Manual for Track Maintenance (2000), shall be done by Track Personnel before welding work commences:

- Slacks, which were caused by wheel-spin burns, shall be lifted out and tamped.
- Fasteners shall be loosened and the rail pads shall be removed from the sleepers over a distance of 1.2m on both sides of the wheel-spin burns to be repaired. (Rail pads to be removed to avoid damage during preheating).
- The minimum distance of loosened sleepers is important to allow counter sagging of the rail when preheated.
- Damaged sleepers, worn and round ballast shall be replaced.

7.5.2 PREPARATION BY WELDING PERSONNEL.

7.5.2.1 All foreign materials, such as grease, oil, rust, etc. in the direct vicinity of wheel-spin burns shall be removed by using a chipping hammer and a steel brush.

7.5.2.2 All loose metal and cracks of the wheel-spin burn shall be removed by using a MC2 grinding machine.

7.5.2.3 Dye penetrant shall be used to ensure all defects have been removed. The surface to be tested shall be cleaned thoroughly with a steel brush.

7.6 GRINDING PROCESSES.

7.6.1 All loose metal and hairline cracks shall be removed with a MC2 grinding machine, before any welding work is done.

7.6.2 Removing undesired metal from the crown using a grinding machine shall commence at the longitudinal centre of the wheel-spin burn, progressing transversely across the rail crown until all cracks and loose metal are removed. The same process shall then be repeated on the other side/half of the wheel-spin burn.

7.6.3 All overlaps as well as previous welding material shall be removed by grinding,

7.6.4 If a wheel-spin burn is present on a previously repaired wheel-spin burn location, grinding shall be done to a depth of at least 3mm or until all defects have been removed. This will ensure that all defects have been removed including:

- Slag inclusion.
- Undercutting.
- Porosity.

7.6.5 Slight pressure shall be applied during grinding work. It shall be ensured that grinding stones are not damaged or clogged with fine steel. The use of damaged grinding stones could be fatal.

7.6.6 If grinding is required to a depth of greater that 12mm, track personnel shall be approached to decide whether the passage of trains is safe.

7.7 PREHEATING.

7.7.1 Preheating of different types of rail, either by means of gas flame or heating powder shall be done strictly in accordance with Chapter 5.

7.7.2 Preheating shall be done in an inverted V shape on both sides of the rail, beginning 50mm either side of the welding surface on the crown, progressing downwards to the flange and ending 150mm either side of the welding surface (Figure 7.1). This method will counteract sagging caused by heat induced by:

- Wheel-spinning.

- Grinding out loose metal.
- Preheating on running surface.
- Rough and final grinding.

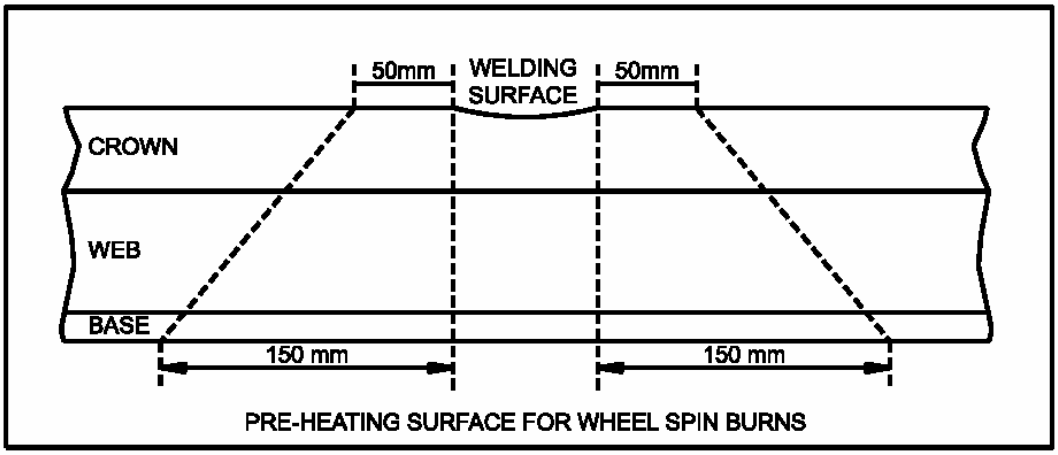

Figure 7.1. Oxy-Propane Preheating Area.

7.8 HEATING POWDER PROCESS.

7.8.1 Wheel-spin burns shall be repaired under total track occupation conditions when heating powder is used.

7.8.2 A wooden block shall be placed underneath the rail at the wheel-spin burn. (Wooden block may be a portion of timber sleeper approximately 500mm in length). A steel plate, 150mm x 150mm x 20mm with insulation material shall then be placed on the wooden block to lift the rail. Steel wedges shall be used between the wooden block and the steel plate to strain the rail (Figure 7.2). This method will counteract sagging.

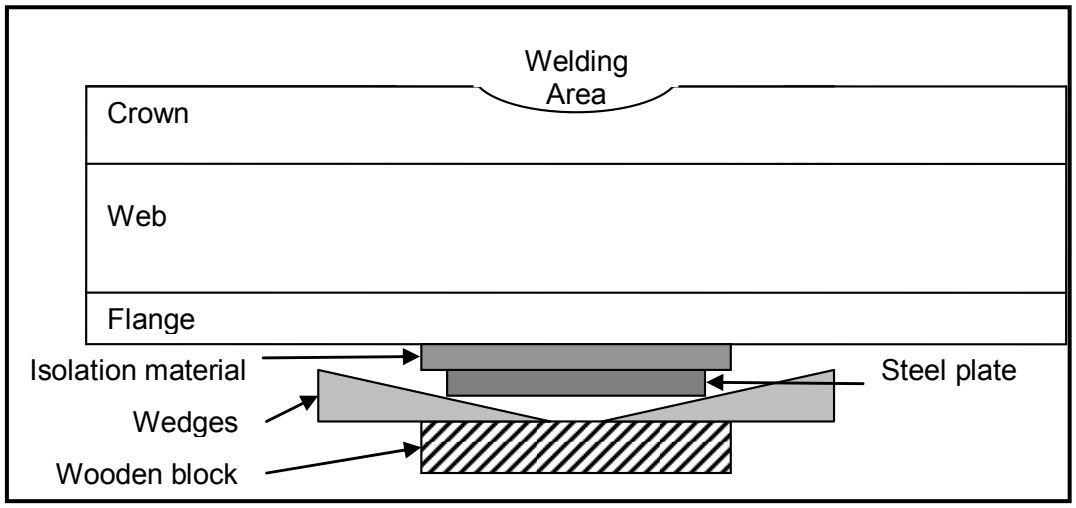

Figure 7.2. Rail Lifting Setup.

7.9 WELDING PROCESSES.

7.9.1 GENERAL.

7.9.1.1 Employees and the public shall be protected against the danger of arc flashes, which may cause arc-eyes.

7.9.1.2 No welding shall be done in rain or fog.

7.9.1.3 Welding cables shall be unwound completely before welding work commences, to avoid inconsistent polarity changes and damage to electronic components.

7.9.1.4 The earth-cable of the welding machine shall be fitted with a suitable clamp and shall be clamped next to the welding area, to prevent short circuits as well as loss of current.

7.9.1.5 The welding-arc length shall be kept as short as possible - approximately the core thickness of the electrode that is used for welding.

7.9.1.6 Welding beads on all types of rails may not be longer than 150mm to control the heat. Welding beads shall be deposited in such a manner that one bead overlaps the other. Welding deposits shall be cleaned directly after being deposited.

7.9.1.7 Every welding bead shall be peened softly with the ball of a 1kg hammer to relieve internal stresses, which could lead to future defects.

7.9.1.8 If cracks, porosity, undercutting, grooves, cavities or slag inclusions appear in the welding work, the entire defect shall be removed by means of grinding.

7.9.1.9 Welding repair of wheel-spin burns can be done by means of manual metal arc welding (MMAW, a constant current (CC) process), or flux-cored arc wire (FCAW, a constant voltage (CV) process).

7.9.1.10 Weaving welding method by means of manual metal arc welding or flux-cored arc welding is not permitted, except in the case of semi-automatic processes. The staggered method shall be used with manual metal arc welding or flux-cored arc welding processes. The staggered method for wheel-spin burn repair is described below:

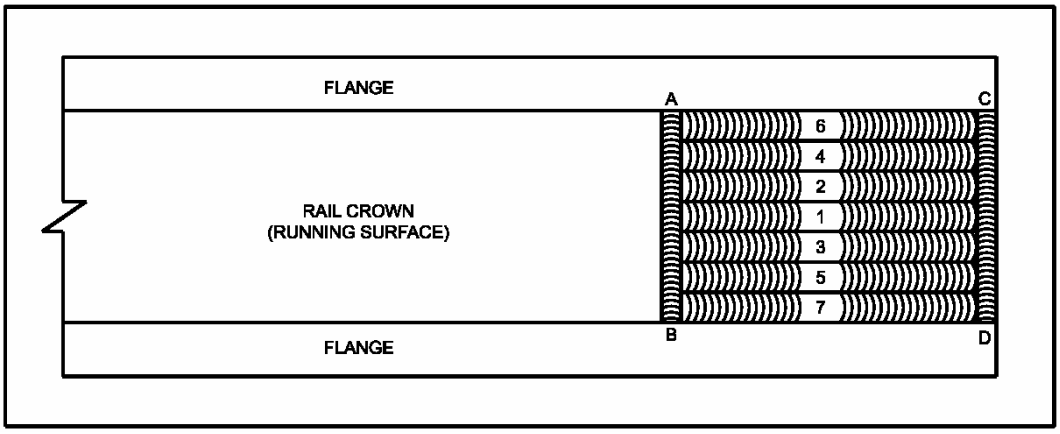

Figure 7.3. Staggered welding method for wheel-spin burns (except for semi-automatic welding processes).

(a) Weld beads AB and CD transversely at the ends of the grinding area.
(b) Weld beads 1 at the centre of the rail crown from AB to CD.
(c) Weld bead 2 next to bead 1, on the left side of bead 1, from AB to CD.
(d) Weld bead 3 next to bead 1, on the right side of bead 1, from AB to CD.
(e) Weld bead 4 next to bead 2, and bead 5 next to bead 3, and so forth.
(f) Follow this pattern until the full width of the crown has been welded.

7.9.2 SEMI-AUTOMATIC WELDING.

7.9.2.1 See Road Rail Welding Vehicle Manual as well as manufacturer's guidelines for the semi automatic procedures.

7.10 RETARDED COOLING (POST HEATING).

7.10.1 Retarded cooling shall be done as set out in Chapter 5.

7.11 ROUGH GRINDING AND FINAL GRINDING.

7.11.1 An MC2 grinding machine shall be used to rough grind wheel-spin burns. An MP12 grinding machine shall be used to final grind wheel-spin burns to obtain a sound profile. Excess welding deposits on the gauge corner, running side and field side of the crown, shall be removed by grinding.

7.11.2 Rough grinding on chrome-manganese rails shall be done after retarded cooling is completed.

7.11.3 Final grinding shall be done after the sleepers on either side of the work place have been tamped and the rail has cooled down to ambient temperature.

7.11.4 Before final grinding is done, the rail pads shall be in position and the fasteners shall be secured.

7.11.5 A train may pass over the work place when:

- The rail has cooled to 300ºC or lower.
- The wooden blocks and steel wedges have been removed.
- The track has been made safe for the passage of trains.

7.12 STANDARDS AND TOLERANCES.

7.12.1 Welding deposits shall be removed by grinding until it matches the rail profile adjacent to the repaired wheel-spin burn. Grooves, ripples, or undercuts may not be present in the rail profile after grinding.

7.12.2 Grinding shall be done in such a manner that a 0.2mm feeler gauge may not enter underneath a 1m straightedge placed on the running surface of the rail. Only a gradual curvature is permissible.

7.12.3 The following details shall be written with yellow chalk (sufficient to remain visible for at least 3 months) on the rail web adjacent the welded area:

- Sequence number of the wheel-spin burn, beginning at zero at the beginning of each financial year for each Transnet Freight Rail welder, and beginning at zero at the beginning of each day for each contractor welding team.
- Welder code (Transnet Freight Rail welders and contractor welders). Transnet Capital Projects' welders will be allocated codes starting with PR and sub-contractors' welders will be allocated codes starting with C.
- Date welded (Transnet Freight Rail welders and contractor welders).
- All daily work performed shall be logged on the prescribed field sheet, Annexure 1-8 for Transnet Freight Rail welders and approved field sheets for Transnet Capital Projects welders and sub-contractors.

7.12.4 The Technical Superintendent/Supervisor or his representative shall examine all welding work, and a report shall be submitted to the Depot Engineer.

CHAPTER 8 – REPAIRING BATTERED RAIL ENDS.

8.1 GENERAL.

8.1.1 Rails are joined by means of fishplates and bolts. When trains traverse a joint, continuous hammering of train wheels damages the two adjoining rail ends. These damaged rail ends are called battered rail ends and can be repaired by means of welding and grinding (Figure 8.1).

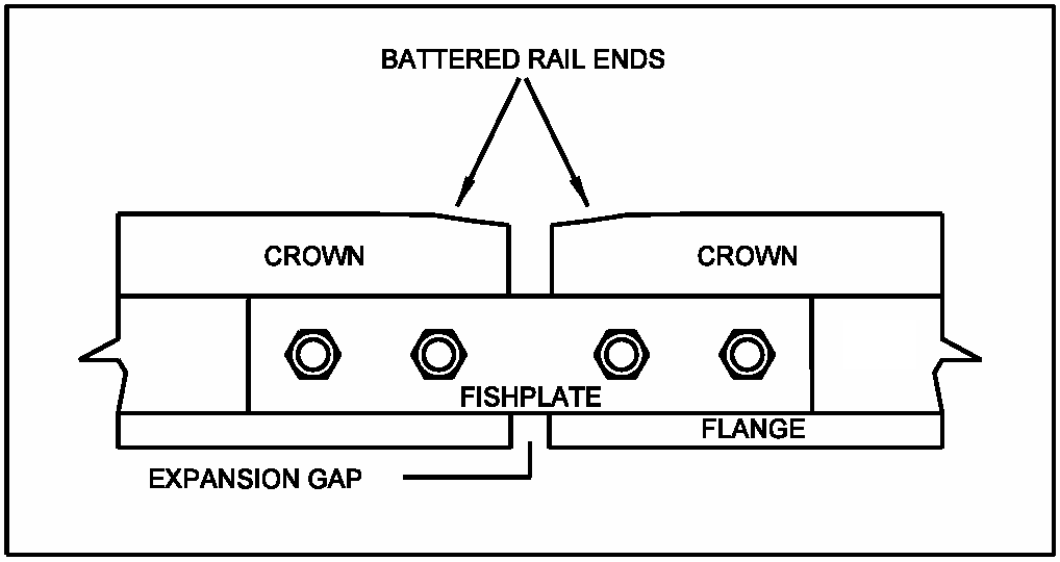

Figure 8.1. Typical battered rail ends.

8.2 INSPECTION AND DECISIONS MAKING.

8.2.1 The workload of battered rail ends shall be determined either by foot or trolley inspections.

8.2.2 The repair of battered rail ends by means of welding work shall be considered when the battering reaches 1mm in depth.

8.2.3 Dips on battered rail ends appear when train wheels have hammered fishplate joints to such an extent that the rail ends are bent downwards. Dipped rail ends shall be cropped (or bent upwards with a vertical Jim-crow) before preparation and welding work commences (Figure 8.3).

8.2.4 Rail ends shall be measured separately on the running surface with a 1m straightedge to determine where the dipped or bent ends start. Bent ends of 2mm or more shall be cropped.

8.2.5 Battered rails ends at fishplated joints with height differences of up to 6mm on yard lines (as classified in the SAP system) with speed restrictions of up to 30km/h may be repaired by welding and grinding as opposed to installing closure rails.

8.2.6 For yard lines the repair process shall be as follows. The higher rail shall be grinded down gradually to 1.5mm over a length of 250mm and the lower rail shall be welded up gradually to match the higher rail (max 4.5mm) over a length of 750mm, which will render a gradual incline of maximum 6mm over a length of 1m.

8.2.7 The relevant maximum height difference limit for main lines and station lines is 3mm. For main lines and station lines the repair process shall be as follows. The higher rail shall be grinded down gradually to 1.5mm over a length of 250mm and the lower rail shall be welded up gradually to match the higher rail (max 1.5mm) over a length of at 750mm, which will render a gradual incline of maximum 3mm over a length of 1m.

8.2.8 MARKING-OFF PROCEDURE WHERE MISMATCHES OCCURE.

8.2.8.1 Rails shall be measured for mismatches by placing a 1m straightedge evenly over the expansion gap of the rails.

8.2.8.2 If rails differ in height, the straightedge shall be placed on the higher rail and pressed down firmly by hand onto the running surface. The gap between the straightedge and the lower rail running surface shall be measured 450mm from the lower rail end (Figure 8.2).

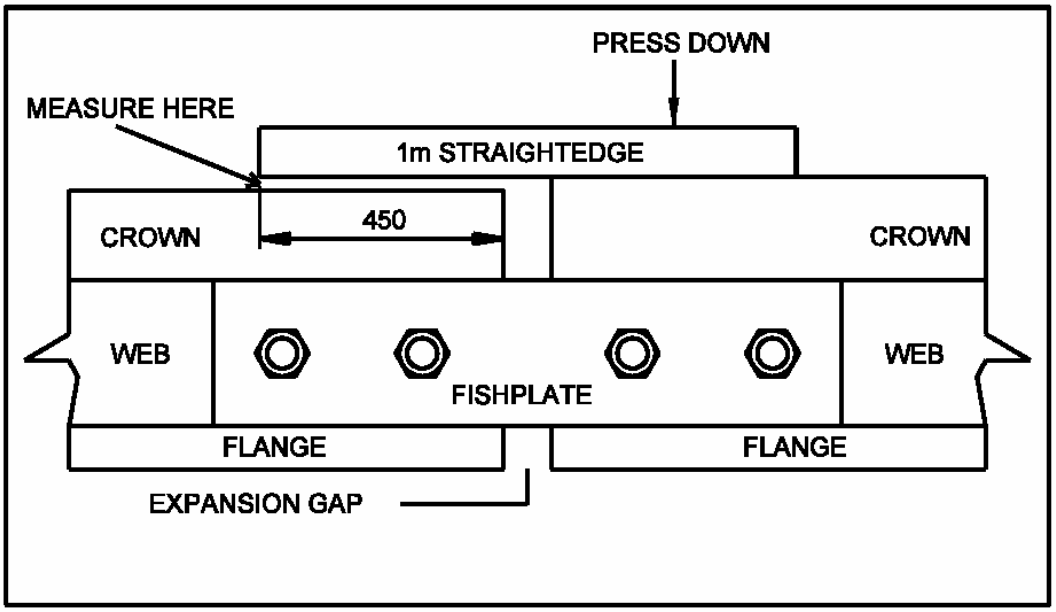

Figure 8.2. Measuring for mismatches.

8.2.8.3 IMPORTANT: If a mismatch exceeds 3mm, one of the rails shall be replaced with a suitable closure rail.

8.2.9 It is prohibited to cast an exothermic joint where battered rail ends were repaired previously by open-arc welding.

8.2.10 Boltholes in the rail web shall be examined for cracks using dye penetrant after the fishplates have been removed.

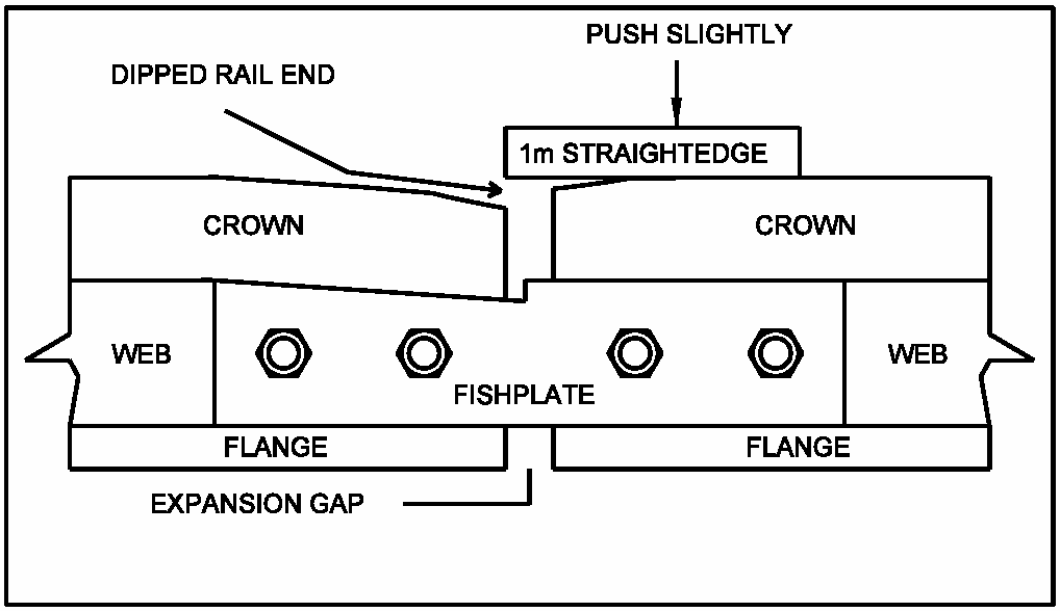

Figure 8.3. Identification of dips on battered rail ends.

8.3 PROTECTION.

8.3.1 Protection shall be afforded in accordance with Spoornet General Appendix No 6 (Part 1) when battered rail ends are repaired.

8.3.2 Repairs to battered rail ends can be done between trains or under total occupation.

8.4 SAFE WORKING PROCEDURES.

Refer to Chapter 2.

8.5 PREPARATION.

8.5.1 PREPARATION BY TRACK PERSONNEL.

8.5.1.1 Preparation work described in the Manual for Track Maintenance (2000) shall be done before welding work commences.

8.5.1.2 Jumper cables shall be fitted to ensure electrical continuity in the rails.

8.5.1.3 Fishplates, rail pads and soleplates shall be removed before welding of rail ends commences. Grease and foreign matter shall be removed from the fishplate mating surfaces at the rail ends and the surfaces brushed clean.

8.5.1.4 The following shall be checked during preparation:

- Dipped ends removed.
- Wear on fishplates.
- Wear on rail crown.
- Condition of bolts, nuts and spring washers.
- Presence of oval or cracked bolt holes.
- Correct expansion gaps.
- Sleeper condition and spacing.
- Enough ballast stone.
- Sleeper fasteners are tight.

8.5.1.5 The following shall be done after welding:

- Fishplates cleaned.
- Fishplates greased.
- Fishplates transposed.
- Fishplates replaced (if required).
- All bolts tightened (torque).

8.5.2 PREPARATION BY WELDING PERSONNEL.

8.5.2.1 The Track Welder shall identify the rail correctly to apply the correct repair procedure.

8.5.2.2 After rail ends are cleaned, visual inspection shall be done and dye penetrant shall be used to test for cracks and other defects.

8.5.2.3 All bumps and humps shall be removed by grinding before marking-off the area to be welded.

8.5.2.4 Battered rail ends shall first be marked-off before welding. The surface shall then be evaluated to decide whether welding or grinding is required.

8.5.2.5 The process for measuring the welding area is as follows: Place a 0.5m straightedge on the running surface of the rails, with the one end of the straightedge lapping 6mm over the opposite end. Mark with yellow chalk where light stops shining through underneath

the straightedge to determine the length to be welded. Repeat the same process on the opposite rail end (Figure 8.4).

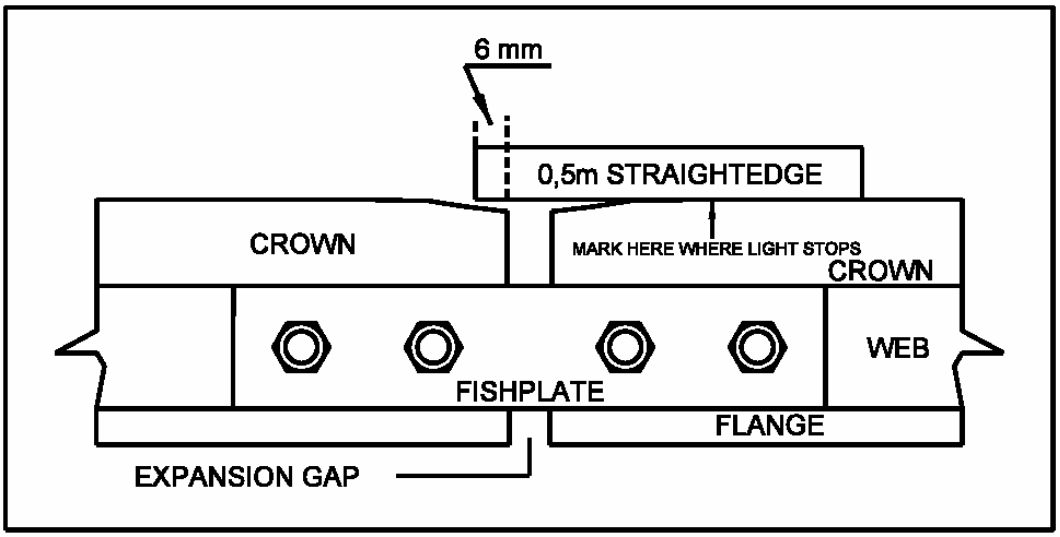

Figure 8.4. Measuring welding area on battered rail ends.

8.6 GRINDING PROCESS.

8.6.1 Before any welding work can take place the following shall be removed using a MC2 grinding machine:

- Loose and work-hardened metal.
- Hairline cracks.
- Overlaps.
- Old welding material.

8.6.2 This will ensure that all defects have been removed including:

- Slag inclusions.
- Undercutting.
- Porosity.

8.6.3 Dye penetrant shall be used to ensure that all defects have been removed. The surface to be tested shall be thoroughly cleaned with a steel brush.

8.6.4 Slight pressure shall be applied during grinding. It shall be ensured that grinding stones are not damaged or clogged with fine steel. Using damaged grinding stones could be fatal.

8.6.5 If grinding is required to a depth of greater that 12mm, track personnel shall be approached to decide whether the passage of trains is safe.

8.7 PREHEATING.

8.7.1 Heating of the different types of rails, either by means of gas or heating powder, shall be done strictly according to Chapter 5.

8.7.2 Preheating shall be done up to 50mm either side of the welding area on the crown, web and flange (Figure 8.5). This will induce an even spread of heat in the rail.

8.7.3 The rail shall be preheated to the prescribed temperature before welding commences.

8.7.4 Each rail end shall be preheated and welded separately (Figure 8.5).

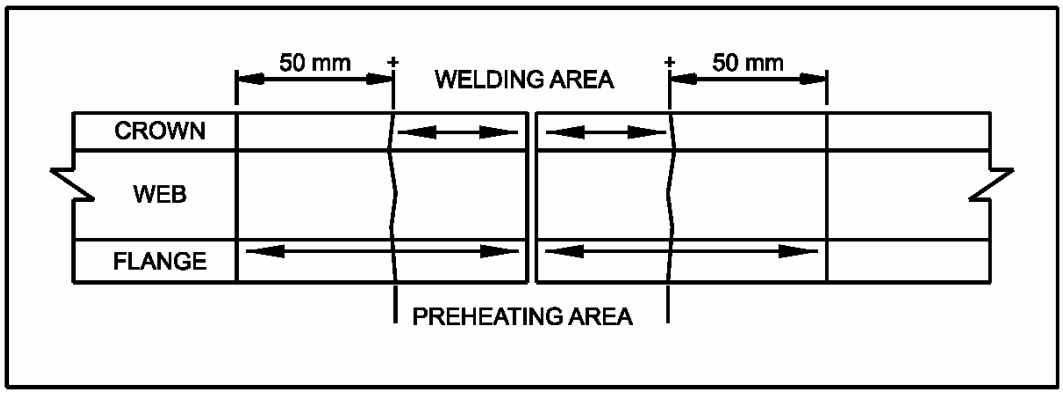

Figure 8.5. Preheating area.

8.8 WELDING PROCESSES.

8.8.1 GENERAL.

8.8.1.1 Employees and the public shall be protected against the danger of arc flashes, which may cause arc-eyes.

8.8.1.2 No welding shall be done in rain or fog.

8.8.1.3 Welding cables shall be unwound completely before welding work commences, to avoid inconsistent polarity changes and damage to electronic components.

8.8.1.4 The earth-cable of the welding machine shall be fitted with a suitable clamp and shall be clamped next to the welding area, to prevent short circuits as well as loss of current.

8.8.1.5 The welding-arc length shall be kept as short as possible - approximately the core thickness of the electrode that is used for welding.

8.8.1.6 Welding beads on all types of rails may not be longer than 150mm to control the heat. Welding beads shall be deposited in such a manner that one bead overlaps the other. Welding deposits shall be cleaned directly after being deposited.

8.8.1.7 Every welding bead shall be peened softly with the ball of a 1kg hammer to relieve internal stresses, which could lead to future defects.

8.8.1.8 If cracks, porosity, undercutting, grooves, cavities or slag inclusions appear in the welding work, the entire defect shall be removed by means of grinding.

8.8.1.9 Welding repair of battered rail ends can be done by means of manual metal arc welding (MMAW, a constant current (CC) process), or flux-cored arc wire (FCAW, a constant voltage (CV) process).

8.8.1.10 Weaving welding method by means of manual metal arc welding or flux-cored arc welding is not permitted, except in the case of semi-automatic processes. The staggered method shall be used with manual metal arc welding or flux-cored arc welding processes. The staggered method is described below:

8.8.1.11 NB: Different repair scenarios on battered rail ends shall be treated as follows:

- Both rail ends measured with 0.5m straightedge will indicate welding length required. Where the light stops shining through underneath the straightedge.
- One rail end measured with 0.5m straightedge will indicate welding length where light stop shining through underneath the straightedge, the other end will indicate no welding required, treat as prescribed in Figure 8.6.

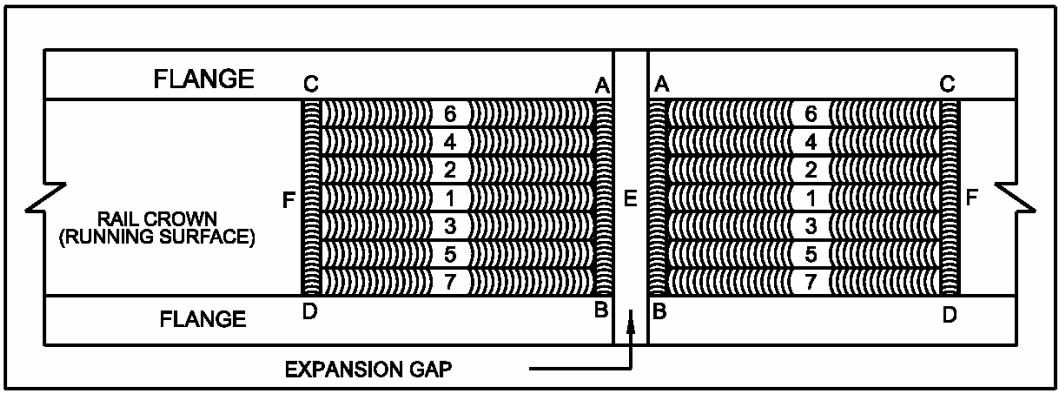

Figure 8.6. Staggered welding method for battered rail ends (except for semi-automatic welding processes).

The staggered method for battered rail end repair is described below:
(a) Weld beads AB and CD transversely at the ends of the grinding area.
(b) Weld bead 1 (i.e. EF) at the middle of the rail crown from AB to CD.
(c) Weld bead 2 next to bead 1, on the left side of bead 1, from AB to CD.
(d) Weld bead 3 next to bead 1, on the right side of bead 1, from AB to CD.
(e) Weld bead 4 next to bead 2, and bead 5 next to bead 3, and so forth.
(f) Follow this pattern till the full width of the crown has been welded.

8.8.2 Where battered rail ends are repaired, both rail ends shall have a hard-facing surface of at least 70mm long x 3mm deep.

8.9 RETARDED COOLING (POST HEATING).

8.9.1 Retarded cooling shall be done as set out in Chapter 5.

8.10 ROUGH GRINDING.

8.10.1 Rough grinding shall commence on the running surface and rail end as soon as possible after welding. The welding area shall then be allowed to cool down to ambient temperature and track personnel shall do final fettling as indicated in the Manual for Track Maintenance (2000).

8.11 CUTTING EXPANSION GAPS.

8.11.1 Metal protruding from expansion gaps shall be removed as soon as possible after welding work, as expansion gaps can close and cause fractures. A wedge shall be placed in the expansion gap on the base to prevent the joint from closing when cutting takes place.

8.11.2 The width of the expansion gap is measured at the bottom of the rail crown. The correct cutting disc (3mm) shall be used (Annexure 27 of the Manual for Track Maintenance (2000)).

8.11.3 The cutting disc shall be positioned in such a way, that both sides of the expansion gap are cut square. The expansion gap shall be cut 10mm deep, or through the deposited metal, whichever is the deepest (Figure 8.7).

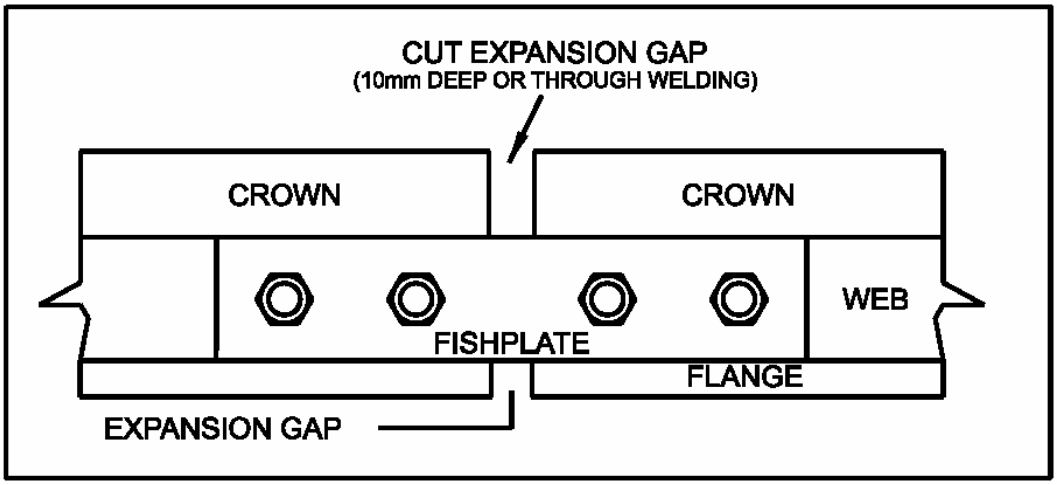

Figure 8.7. Cutting of expansion gaps.

8.12 FINAL GRINDING.

8.12.1 Final grinding shall be done after the sleepers on both sides of the working place have been tamped and the joint has cooled to ambient temperature.

8.13 STANDARDS AND TOLERANCES.

8.13.1 Welding deposits shall be removed by grinding until it matches the rail profile adjacent to the repaired battered rail ends. Grooves, ripples, or undercuts may not be present in the rail profile after grinding.

8.13.2 Grinding shall be done in such a manner that a 0.2mm feeler gauge may not enter underneath a 0.5m straightedge placed on the running surface of the rail (Figure 8.8).

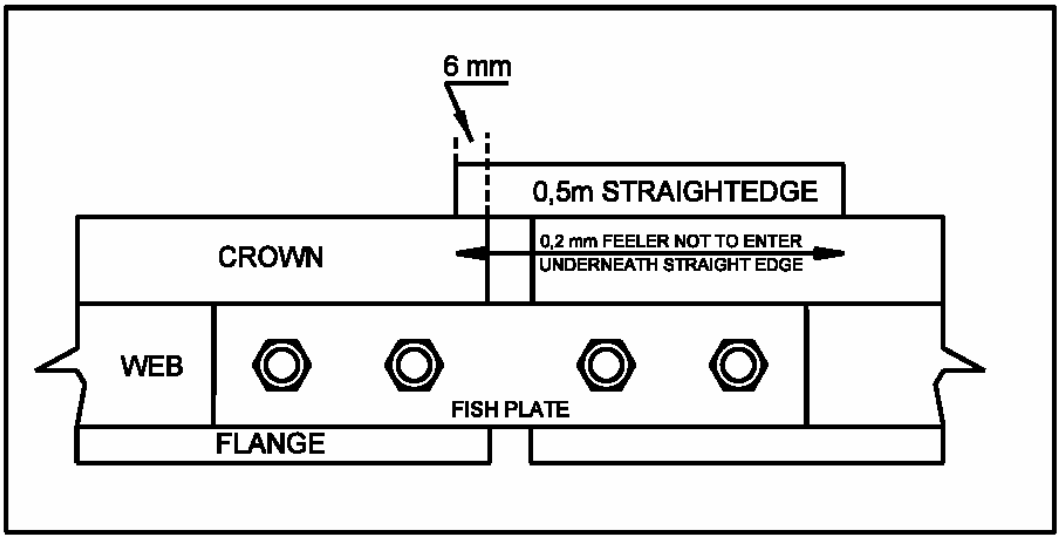

Figure 8.8. Tolerances for battered rail end repairs.

8.13.3 The following details shall be written with yellow chalk (sufficient to remain visible for at least 3 months) on the rail web adjacent the welded area:

- Sequence number of the battered rail ends, beginning at zero at the beginning of each financial year for each Transnet Freight Rail welder, and beginning at zero at the beginning of each day for each contractor welding team.
- Welder code (Transnet Freight Rail welders and contractor welders). Transnet projects' welders will be allocated codes starting with PR and sub-contractors' welders will be allocated codes starting with C.
- Date welded (Transnet Freight Rail welders and contractor welders).
- All daily work performed shall be logged on the prescribed field sheet, Annexure 1-8 for Transnet Freight Rail welders and approved field sheets for Transnet Projects welders and sub-contractors.

8.13.4 The Technical Superintendent/Supervisor or his representative shall examine all welding work, and a report shall be submitted to the Depot Engineer.

CHAPTER 9 – REPAIRING DIPPED HEAT-AFFECTED ZONES ON FLASH BUTT JOINTS.

9.1 GENERAL.

9.1.1 Dipped heat-affected zones on flash butt joints are commonly found on chrome-manganese rails. A typical dipped joint is shown in Figure 9.1.

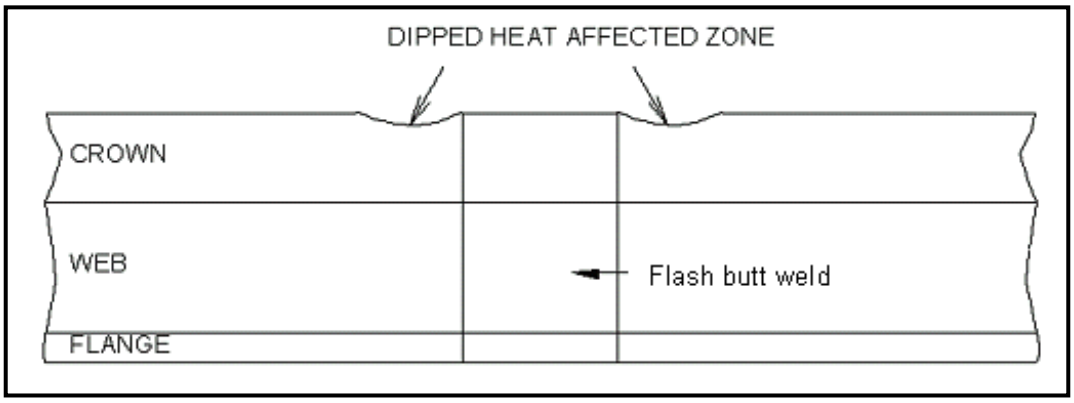

Figure 9.1. Schematic representation of a dipped flash butt joint.

9.2 INSPECTIONS AND DECISION MAKING.

9.2.1 The dips are measured with a 1m straightedge and feeler gauge, with the straightedge placed centrally over the joint.

9.2.2 If the dip is measured to be:

- Less than 0.4mm deep, it shall be repaired by grinding only, to a tolerance of 0.2mm.
- More than 0.4mm deep, it shall be repaired by means of manual metal arc welding (MMA, a constant current (CC) process), or flux-cored arc wire (FCAW, a constant voltage (CV) process).
- Repair work shall be done in accordance with Chapter 7.
- On Heavy Haul lines, joints with dips deeper than 0.3mm shall be replaced with a closure rail.

9.3 STANDARDS AND TOLERANCES.

9.3.1 Welding deposits shall be removed by grinding until it matches the rail profile adjacent to the repaired joint. Grooves, ripples, or undercuts may not be present in the rail profile after grinding.

9.3.2 Grinding shall be done in such a manner that a 0.2mm feeler gauge may not enter underneath a 1m straightedge placed on the running surface of the rail. Only a gradual curvature is permissible.

9.3.3 The following details shall be written with yellow chalk (sufficient to remain visible for at least 3 months) on the rail web adjacent the welded area:

- Sequence number of the flash butt joint, beginning at zero at the beginning of each financial year for each Transnet Freight Rail welder, and beginning at zero at the beginning of each day for each contractor welding team.
- Welder code (Transnet Freight Rail welders and contractor welders). Transnet projects' welders will be allocated codes starting with PR and sub-contractors' welders will be allocated codes starting with C.
- Date welded (Transnet Freight Rail welders and contractor welders).
- All daily work performed shall be logged on the prescribed field sheet, Annexure 1-8 for Transnet Freight Rail welders and approved field sheets for Transnet Projects welders and sub-contractors.

9.3.4 The Technical Superintendent/Supervisor or his representative shall examine all welding work, and a report shall be submitted to the Depot Engineer.

CHAPTER 10 – REPAIRING SWITCH BLADES.

10.1 GENERAL.

10.1.1 Preventive maintenance shall be done regularly on switch blades, to increase life span.

10.1.2 The smaller cross sectional area of a switch blade in comparison to that of a full crown area shall be taken into consideration when welding work is done on switch blades.

10.1.3 If switch blades are not repaired according to the following guidelines, fractures may occur which could lead to derailments.

10.1.4 Only competent Track Welders who have been certified by an accredited official may conduct welding repairs on switch blades.

10.1.5 Track Welders that were not exposed to welding of switch blades for longer than one year shall undergo a competency test before being allowed to do this type of work.

10.1.6 No welding may be done on undercut switch blades.

10.1.7 Minor metal flow and shelling shall be removed from the switch blades by means of light grinding.

10.1.8 Always test for cracks on the switch blades after grinding with dye penetrant.

10.2 INSPECTION AND DECISION MAKING ON HINGED SWITCH BLADES.

10.2.1 Track personnel are responsible for the visual inspection of switch blades and if necessary, for notifying the Maintenance Manager (Planning) of any defects. The Technical Supervisor, in conjunction with the Track Inspector, will then decide if the switch blade can be repaired by means of welding, grinding or if it has to be replaced.

10.2.2 Switch blades and stock rails shall be checked regularly for defects.

10.2.3 Switch blades and stock rails shall lock for a minimum distance of 1.5m measured from the tip (point) of the blades (Figure 10.1).

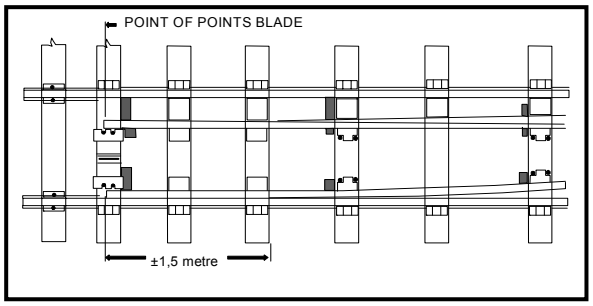

Figure 10.1. General layout of a set of points.

10.2.4 Metal flow (overlap) on stock rails and switch blades shall be removed before it has exceeded 2mm or developed to such an extent that the switch blade is prevented from moving in the positive lock position.

10.2.5 Causes of switch blade breakouts include:

- Overlaps on the stock rail.
- A switch blade, which does not fit the stock rail.
- Side wear on the stock rail.

10.2.6 Single breakouts up to 150mm in length and 10mm deep within the first 1m from the tip of the switch blade, may be repaired by welding and grinding in track.

10.2.7 Breakouts longer than 150mm within the first 1m from the tip of the switch blade may be repaired by welding in a workshop only.

10.2.8 Where defects occur further than 1m from the tip, the blade shall be replaced. Heat application further than 1m from the tip of the switch blade will lead to distortion.

10.2.9 Wheel-spin burns and battered rail ends in the portion of the switch blade where full crown profile is present shall be treated according to the prescribed directives (Chapters 7 and 8).

10.2.10 NB: The above mentioned only applies to horizontal cracks and beak-outs and/or defects, which can be repaired. More than one breakout within 1m from the switch blade's tip may be welded, provided that every breakout is treated separately.

10.3 PROTECTION.

10.3.1 Protection shall be afforded according to Spoornet General Appendix No 6 (Part 1).

10.3.2 Repairs to switch blades shall be done under total occupation conditions.

10.4 FIRE-PREVENTION.

10.4.1 Safety aspects regarding fire prevention shall be followed at all times (Chapter 2).

10.5 PREPARATION.

10.5.1 PREPARATION BY TRACK PERSONNEL.

10.5.1.1 Repair work shall always be carried out in conjunction with track personnel, train operations personnel, and a Signals Technician. It is required that this is done under full occupation conditions and that enough time is allowed to complete the preparation.

10.5.1.2 It is important that the set of points is well tamped before any work is carried out on the switch blade.

10.5.2 PREPARATION BY WELDING PERSONNEL.

10.5.2.1 All grease and foreign materials shall be removed before any examination work or grinding work commences.

10.5.2.2 The switch blade shall be visually examined for horizontal and vertical defects. Affected areas shall be inspected by non-destructive methods. If defects are present, a decision shall be made in conjunction with track personnel whether the switch blade shall be replaced.

10.5.2.3 Employees and the public must be protected against the danger of arc flashes.

10.5.2.4 No welding shall take place in rain or fog conditions.

10.5.2.5 The following shall be done during workshop repairs:

- Care shall be taken during handling and storing.
- Switch blades shall be placed on blocks before repairs to enable easily cleaning and examination.
- Switch blades shall be bolted to a jig to counteract distortion.

10.6 GRINDING PROCESS.

10.6.1 Grinding shall be done with a MC2 grinding machine until all defective material has been removed. An additional 3mm shall be removed by grinding to ensure parent metal has been reached.

10.6.2 The switch blade shall be replaced if defects are deeper than 13mm after grinding.

10.6.3 Switch blades shall be checked with dye penetrant to ensure that no further defects are present.

10.7 PREHEATING.

10.7.1 Heat application regarding different grades of rail shall be strictly adhered to as set out in Chapter 5.

10.7.2 The grinding area plus 100mm on both sides thereof shall gradually be pre-heated by moving the flame to and fro over the flange, web and crown (Figure 10.2). This method will induce even heat in the switch blade.

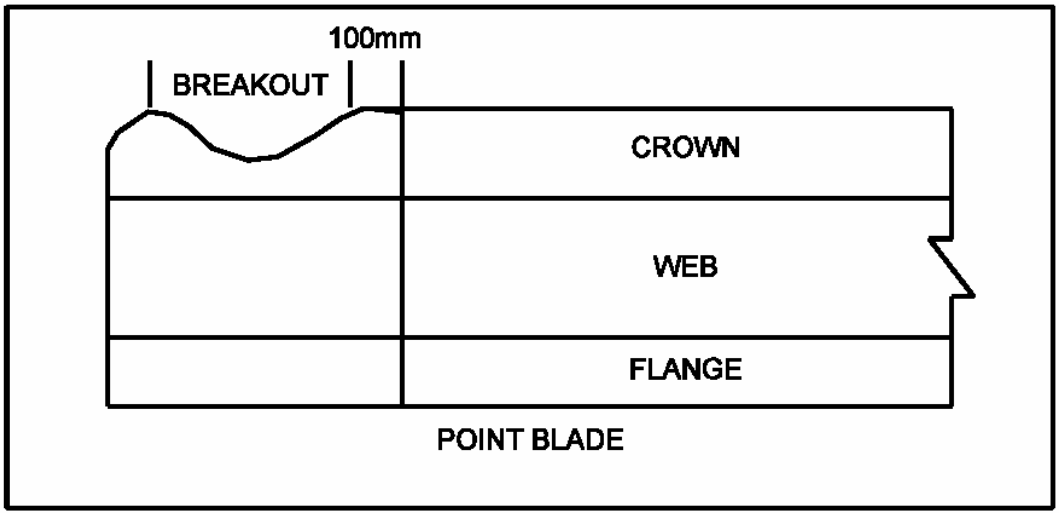

Figure 10.2. Preheating of defective area.

10.8 WELDING PROCESS.

10.8.1 Switch blades can be repaired by means of manual metal arc welding (MMA, a constant current (CC) process), or flux-cored arc wire (FCAW, a constant voltage (CV) process).

10.8.2 To counteract distortion and overheating, the step back welding method shall be applied.

10.8.3 Continue with this process until the welding metal is built up high enough to ensure an even and smooth finish.

10.8.4 Overheating shall be avoided to minimize distortion.

10.9 FINAL GRINDING.

10.9.1 Grinding on the welded area shall be done to the required height and profile as soon as possible after the switch blade has cooled down to ambient temperature.

10.9.2 Grinding on the welded running surface of the switch blade shall be done until it matches the adjacent running surface in the horizontal as well vertical planes (Figure10.3).

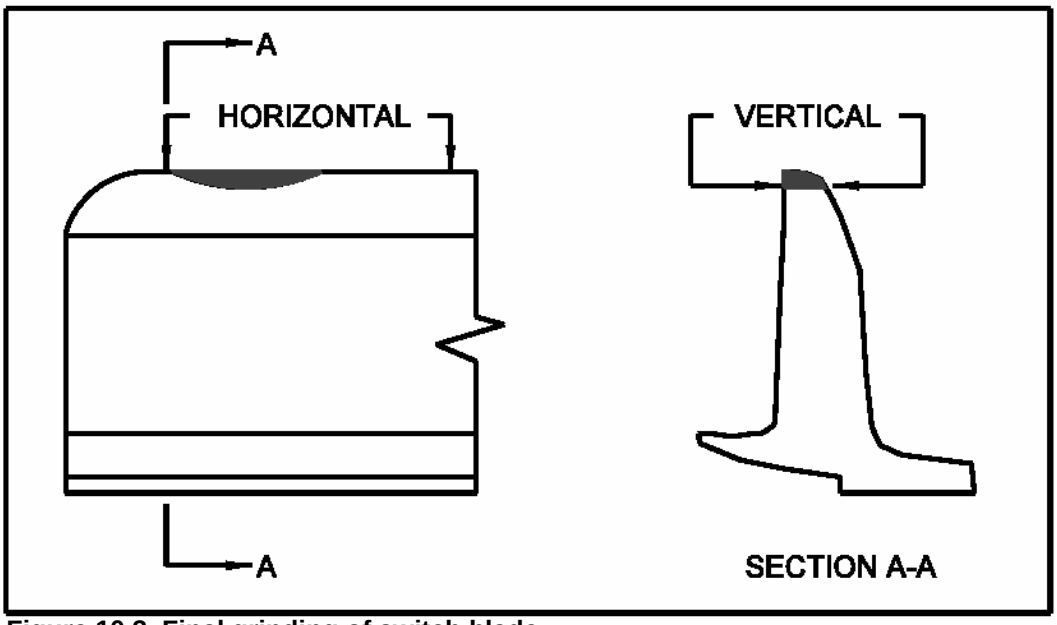

Figure 10.3. Final grinding of switch blade.

10.9.3 Grinding of the matching surfaces of the switch blade shall be done according to the contour to fit neatly against the stock rail.

10.9.4 Signals Technicians and track personnel shall set up and test the switch blades.

10.9.5 The running side shall be checked for defects. The blade shall be finally tested with dye penetrant. If any cracks do occur, these shall be completely removed (as set out above) and built up again by means of welding. Under no circumstances may a crack be left in a switch blade. The blade will break which may cause a derailment.

10.9.6 If the switch blade does not fit, a Track Welder, in conjunction with track personnel, shall make the necessary adjustments.

10.10 STANDARDS AND TOLERANCES.

10.10.1 A 0.2mm feeler gauge may not enter underneath a 1m straightedge, placed centrally over the running surface (longitudinally) of the switch blade.

10.10.2 The horizontal gradient of the switch blade running surface shall be maintained at all times. A gradual radius shall be affected by grinding in the vertical surface on the running side of the switch blade.

CHAPTER 11 – EXOTHERMIC CASTING OF RAILS (SKV-PROCESS).

11.1 GENERAL.

11.1.1 Track Welders, who were trained and have passed the assessment for exothermic casting on the Transnet Railway Network, may undertake exothermic casting work. Esselen Park or an approved body will issue a certificate to Track Welders who passed their theoretical and practical training.

11.1.2 Only authorized officials from Central Office may conduct practical testing of Track Welders, which will be moderated by Esselen Park or an approved body.

11.1.3 Track Welders shall also be re-evaluated regularly by means of radiography and physical methods.

11.1.4 The equipment used for exothermic casting shall be kept in a good condition and shall be checked by Supervisors on a monthly basis. The Track Welding Equipment Checklist may be used for this purpose.

11.1.5 All exothermic casting kits shall be stored in a dry place and protected against moisture. Storing of exothermic casting consumables shall comply with the manufacturer's specifications and used according to manufacturing dates. A policy of first-in-first-out shall be applied when issuing exothermic kits.

11.1.6 NB. Shelf life of all exothermic casting consumables is 3 years.

11.1.7 Castings of exothermic joints are not permissible in rainy conditions.

11.1.8 A disc cutter shall be used to cut the prescribed gap. The minimum distance from rail ends to the edge of nearest bolthole is 25mm.

11.1.9 If for any reason, an exothermic joint was rejected, the joint shall be removed completely, and replaced with a suitable closure rail of 4.2m or wide gap joint.

11.1.10 Two rail temperature readings shall be taken during the welding process:

- Place thermometer 2m from the rail end, after the rail end has been cut.
- First temperature reading: Before the rail ends are aligned.
- Second temperature reading: After excess metal has been sheared.

- These readings shall be recorded together with the joint data on the prescribed field sheet (Annexure 1-8).
- Use two thermometers to verify the rail temperature, one each by welding and track staff.

11.1.11 All joints inside turnouts, except for hinge joints, may be joined exothermically at rail temperatures higher than 5° Celsius.

11.1.12 When a turnout is to be joined exothermically to the running line, it shall be done within the specified temperature ranges (Annexure 1-3).

11.1.13 Rail joints, which are more than 20m inside a tunnel, may be joined exothermically if the rail temperature is above 5° Celsius.

11.1.14 Fishplate joints on Monoblock crossings may not be exothermically joined. The crossing and rail ends shall fit tightly to prevent any battering.

11.1.15 Time required to complete an exothermic joint:

- A minimum time period of 45 minutes shall be allocated to the Track Welder to complete an exothermic joint. This makes provision for:
  - Alignment of rail ends.
  - Mounting of exothermic casting equipment and consumables.
  - Casting of exothermic joint.
  - Shearing and rough grinding of joint.

11.1.16 NB: Above mentioned time does not include the preparation of the track, final grinding and cleaning of the joint.

11.1.17 All new exothermic joints that are subjected to axle loads in excess of 26 ton shall be fitted with joggle plates, until the joints are radiographically and ultrasonically tested and found to be defect free. Joggle plates may then be removed.

11.2 INSPECTION AND DECISION MAKING.

11.2.1 The Maintenance Manager will determine workload and priorities. This will be provided to the Production manager who will arrange for work to be done.

11.2.2 The rail type shall be identified by the roll marks (Annexure 4-1).

11.2.3 All dipped joints shall be cropped and rails moved up before any exothermic joint can be cast.

11.2.4 NB: Casting of exothermic joints is not allowed where battered rail ends were repaired by means of arc welding.

11.2.5 A minimum distance of 2m shall be maintained between a flash butt joint and an exothermic joint (Annexure 1-5).

11.2.6 Permanent closure rails with a minimum length of 4.2m, without boltholes, matching the existing rail profile shall be used.

11.2.7 The rail height shall be measured at the rail ends by means of an outside calliper and steel ruler to establish the correct rail height difference. The maximum and minimum height will determine which type of mould to be used.

11.2.8 Composite exothermic kits shall be used to join two rails of different profiles, and the rail height difference on these rails shall not exceed 3mm.

11.3 PROTECTION OF TRAINS AND SAFEGUARDING OF PERSONNEL.

11.3.1 Protection of trains and the safeguarding of personnel shall be afforded in accordance with Spoornet General Appendix No 6 (Part 1).

11.4 SAFE WORKING PROCEDURES.

11.4.1 Refer to Chapter 2.

11.5 PREPARATION.

11.5.1 PREPARATION BY TRACK PERSONNEL.

11.5.1.1 Preparation work as described in the Manual for Track Maintenance (2000) shall be done before the welding process starts. This includes replacing ballast, sleepers, applying and fitting jumper cables and removing fishplates.

11.5.1.2 Installing closure rails and insulating joints:

- Cast the joint on one end of the closure rail or insulating joint before beginning preparation on the other end. This will assist in controlling gap sizes influenced by the effects of rail expansion and/or contraction due to temperature changes.

- Cut lines shall be made by using sharp Boilermaker's chalk.
- Length of closure shall be 10mm shorter than the length required in track minus the prescribed gap size (Table 11.1).
- Preparation for the second joint shall only begin after the first exothermic joint is cast.

Table 11.1. Prescribed rail gaps.

PROCESS	MINIMUM/ MAXIMUM RAIL GAP
SKV-F	24 – 26mm
SKV-M	35 – 40mm
SKV-L	40 – 50mm

- Temperature ranges as stipulated in Manual for Track Maintenance (2000) shall be strictly adhered to.
- Temperature readings shall be logged on the prescribed field sheets for audit and inspection purposes.

11.5.1.3 Rails with surface defects, and oval or cracked bolt holes shall be cropped and replaced with closure rails no shorter than 4.2m.

11.5.1.4 Rail ends that have been cut with gas equipment in the past shall be cropped at least 150mm using a disc cutter.

11.5.1.5 In cases where existing CWR is joined by exothermic casting, 80 sleepers on both sides of the joint shall be loosened for de-stressing purposes as specified in the Manual for Track Maintenance (2000).

11.5.1.6 Exothermic joints in track shall be centred between two sleepers in order to allow for clamping with G-Clamps and joggle plates.

11.5.1.7 The track alignment shall be brought to prescribed standard for a minimum distance of 5m on both sides of joint. Three sleepers on both sides of the joint shall be loosened. This will assist in aligning the two rail ends.

11.5.2 PREPARATION BY WELDING PERSONNEL.

11.5.2.1 The Track Welder shall identify the rail type correctly before an occupation is taken, so that the correct casting process can be decided upon.

11.5.2.2 Rail surfaces shall be cleaned using a steel brush, chipping hammer and waste before jumper cables are fitted to ensure that rail ends are free from grease, oil, rust and foreign matter.

11.5.2.3 Bolt holes shall be eliminated.

11.5.2.4 Grinding shall be done on the rail ends to render a shiny metal surface after the rail gap is obtained for a distance of 50mm on both sides. (The purpose is to remove oxides from the rail surface).

11.5.2.5 Exothermic casting is not allowed where arc welding was done on the rail surface, e.g. welding repair of battered rail ends and wheel-spin burns.

11.5.2.6 Overlaps shall be removed by grinding over a distance of at least 0.5m on either side. Copper bond residues shall be removed to obtain a shiny surface.

11.5.2.7 All rails shall be cut with a disc cutting machine. Gas cutting is only permitted where kick-outs are removed.

11.6 EXOTHERMIC CASTING EQUIPMENT.

11.6.1 GENERAL.

11.6.1.1 Tools and equipment used in the exothermic casting process shall comply with Act 85 requirements.

11.6.2 USE OF THE LONG-LIFE CRUCIBLE.

11.6.2.1 Assembling the long life crucible:

- Sealing paste shall be applied uniformly around the top of crucible rim.
- The extension sleeve and crucible are clamped by means of a clamp ring.
- After tightening the screw, lightly tap around the circumference of the ring with a hammer, and then re-tighten.
- Remove any excess paste inside the crucible.

11.6.2.2 Preheating the crucible:

- The crucible shall be dried out at 150°C:
  - Daily, before being used.
  - Each time a new crucible is used.

- o If more than an hour has lapsed since previous casting.
- o Applying uniform heat distribution, by rotating the flame inside the crucible.

11.6.2.3 Cleaning the crucible after casting:

- Excessive slag in crucibles shall be removed by using the thimble drift.
- Easy removal of slag is obtained when it is chopped vertically towards the thimble hole. Turn the crucible upside down, remove the residual thimble with thimble drift, and tap it lightly with a small hammer. Take care not to damage the thimble seat.
- Accumulation of slag in the upper part of the crucible may be carefully removed with a thimble drift.
- Renew a crucible when hot spots are visible on the crucible shell, and when the thickness of the refractory material after the removal of slag is inadequate/cracked. This may help avoid run-outs.
- It is recommended that the crucible be placed inside a drum filled with sand to absorb shocks when transported.
- Care shall be taken that the liner is not exposed to water.
- NB: The inside of the crucible lining may not be patched.

11.7 COMPOSITION OF AN EXOTHERMIC CASTING PORTION.

Table 11.2. Composition of an exothermic casting portion.

Element	Z80	Z110	Z120
Carbon	0,45 - 0,65	0,65 - 0,75	0,70 - 0,85
Manganese	0,80 - 1,30	0,80 - 1,30	0,80 - 1,30
Aluminium	0,2 max	0,2 max	0,2 max
Vanadium	Min	0,20	0,2
Chromium	Min	0,2 (After welded)	0,40 - 0,60
Hardness (BN)	228 - 269	311 - 375	350 - 380
Deflection at destruction			
48kg/m	18mm	11mm	11mm
57kg/m	18mm	11mm	11mm
60kg/m		11mm	11mm

11.8 TYPES OF EXOTHERMIC CASTING PROCESSES.

- SKV-F PROCESS (0 - 3mm crown wear).Obtainable in 22, 30, 40, 48, 57 and 48 to 51kg/m (other sizes are available on request).

- SKV-F PROCESS (0 - 3mm crown wear; 3-piece mould).Obtainable in 40, 48, and 57kg/m.

- SKV-M PROCESS (0 - 3mm crown wear, 3-piece mould slab track in tunnels).Obtainable in 48, 57kg/m, S60, UIC60/60E1.

- SKV-L PROCESS (0 - 3mm crown wear).Obtainable in 48, 57kg/m, S60, UIC60/60E1.

- SKS PROCESS (CRANE RAIL).Obtainable in 64 and 88 kg/m (other sizes are on request).

- SKV-F PROCESS (COMPOSITE MOULDS).Obtainable in 40 to 48, 48 to 51, 48 to 57, 57 to S60 and 57kg/m to UIC60/60E1.

- SKV-F PROCESS (3 - 6mm crown wear, step-mould).Obtainable in 48 and 57kg/m.

- SKV-M PROCESS (3 - 6mm crown wear, step-mould).Obtainable in S60 and UIC60/60E1.

11.9 HEAD HARDENED RAILS.

11.9.1 Exothermic casting procedures for HH rails are the same as for UIC-A type rails with the following additional processes.

Table 11.3. Portion types and cooling treatment for HH rails.

RAILS	PORTION	COOLING TREATMENT
48kg/m UIC-A - 48kg/m HH	Z80	No retarded cooling
48kg/m Cr-Mn - 48kg/m HH	Z110	Retarded cooling***
57kg/m UIC-A - 57kg/m HH	Z80	No retarded cooling
57kg/m UIC-A - 60kg/m Cr-Mn	Z80	Retarded cooling***
57kg/m Cr-Mn - 57kg/m HH	Z110	Retarded cooling***
60kg/m Cr-Mn - 60 kg/m HH	Z110	Retarded cooling***
UIC60 M HH - HH	Z120	No retarded cooling
UIC60 L HH - HH	Z120	No retarded cooling
48 SKV-F HH - HH	Z120	No retarded cooling
48/51 SKV-F HH - HH	Z120	No retarded cooling
48 SKV-M HH - HH	Z120	No retarded cooling
48 SKV-L HH - HH	Z120	No retarded cooling
57 SKV-F HH - HH	Z120	No retarded cooling
57 SKV-M HH - HH	Z120	No retarded cooling
57 SKV-L HH - HH	Z120	No retarded cooling

Note: *** Retarded cooling to be applied on the Cr-Mn rail side only.

11.10 COLOUR CODING TO PRODUCTS FOR EASY IDENTIFICATION.

Exothermic Description, marking on box and sticker colour		profile	profile	grade
22 Skv - F	Turquoise - Orange	Turquoise		700 - 900
30 Skv - F	Brown - Orange	Brown		700 - 900
40 Skv - F	Violet - Orange	Violet		700 - 900
40 Skv - L	Violet - Orange	Violet		700 - 900
40/48 Skv - F	Violet - Blue - Orange	Violet	Blue	700 - 900
48 Skv - F	Blue - Orange	Blue		700 - 900
48 Skv - M	Blue - dark blue - Orange	Blue	Dark blue	700 - 900
48 Skv - L	Blue - Blue - Orange	Blue		700 - 900
48 Skv - F Cr-Mn	Blue - Yellow	Blue		1100
48 Skv - L Cr-Mn	Blue - Blue - Yellow	Blue	Blue	1100
48 Skv - F 3-6mm Stepped	Blue - Orange	Blue		700 - 900
48/51 Skv - F	Blue - Orange	Blue		700 - 900
48 Skv - F HH 350 LHT	Blue - White	Blue		1200
48 Skv - L HH 350 LHT	Blue - Blue -White	Blue	Blue	1200
48/57 Skv - F HH 350 LHT	Blue - White	Blue		1200
48/51 Skv - F HH 350 LHT	Blue - White	Blue		1200
48/57 Skv - F	Blue - Red - Orange	Blue	Red	700 - 900
48 Slabtrack	Red - Orange	Blue		700 - 900
57 Skv - F	Red - Orange	Red		700 - 900
57 Skv - M	Red - Dark Red - Orange	Red	Dark red	700 - 900
57 Skv - F 3-6mm Stepped	Red - Orange	Red		700 - 900
57 Slabtrack	Red - Orange	Red		700 - 900
57 Skv - L	Red - Red - Orange	Red	Red	700 - 900
57 Skv - F Cr-Mn	Red - Yellow	Red		1100
57 Skv - L Cr-Mn	Red - Red - Yellow	Red	Red	1100
57/60 Skv - F	Red - Green - Orange	Red	Green	700 - 900
57 Skv - L HH 350 LHT	Red - Red -White	Red	Red	1200
57 Skv - F 3-6mm Stepped HH 350 LHT	Red - White	Red		1200
57/UIC60 - F HH 350 LHT	Red - Green -White	Red	Green	1200
57 Skv - F HH 350 LHT	Red - White	Red		1200
57/UIC60 - F Cr-Mn	Red - Green - Yellow	Red	Green	1100
57/S60 - F Cr-Mn	Red - Green - Yellow	Red	Green	1100
UIC60 Skv - M HH 350 LHT	Green - White	Green		1200
S60 Skv - M HH 350 LHT	Green - White	Green		1200
UIC60 Skv - L HH 350 LHT	Green - Green - White	Green	Green	1200
UIC60 Skv - M HH 350LHT 3-6mm Step	Green - White	Green		1200
S60 Skv - M Cr-Mn	Green - Yellow	Green		1100
S60 Skv - L Cr-Mn	Green - Green - Yellow	Green	Green	1100
S60 Skv - M Cr-Mn 3-6mm Stepped	Green - Yellow	Green		1100
UIC60 Skv - M Cr-Mn	Green - Yellow	Green		1100
UIC60 Skv - L Cr-Mn	Green - Green - Yellow	Green	Green	1100
UIC60 Skv - M Cr-Mn 3-6mm Stepped	Green - Yellow	Green		1100
S60/UIC60 Skv - M Cr-Mn	Green - Yellow	Green		1100
64 Kg Skv - SKS	Profile clearly marked			700 - 900
88 Kg Skv - SKS	Profile clearly marked			700 - 900
A 75 - SKS	Profile clearly marked			700 - 900
A 100 - SKS	Profile clearly marked			700 - 900
A 120 - SKS	Profile clearly marked			700 - 900
A 151 - SKS	Profile clearly marked			1100
A186 - SKS	Profile clearly marked			700 - 900
MRS 87	Profile clearly marked			700 - 900

11.11 THE EXOTHERMIC CASTING PROCESS.

11.11.1 PREPARATION OF THE JOINT.

11.11.1.1 Refer to Paragraph 11.5.

11.11.2 ALIGNING OF RAIL ENDS TO CAST EXOTHERMIC JOINT.

11.11.2.1 Use rail aligner or steel wedges to lift the rail ends after the rail pads have been removed.

11.11.2.2 Special care shall be taken when aligning rails to turnouts.

11.11.2.3 A 1m straightedge, two 1mm shims for the SKV-F process and two 2mm shims for the SKV-M/L processes, shall be used to set up the rail ends to the required height. The straightedge shall be placed over the gap, with the shims exactly the same distance from the ends of straightedge. Lift the rails by means of wedges or rail aligner until the rail ends at the gap is flush with the edge of straightedge.

11.11.2.4 Check the rail crown and flange alignment using the straightedge.

11.11.2.5 The Track Welder shall check the first joint cast everyday to ensure that the correct alignment was obtained. If the vertical alignment is incorrect, the shims shall be adjusted.

11.12 MOUNTING AND SEALING THE MOULDS.

11.12.1 Place the universal mounting clamp on the rail crown and use the universal gap gauge to ensure that the mounting clamp arms are positioned centrally over the gap.

11.12.2 The burner holder shall be placed in the universal mounting clamp, centrally over the gap and set to the correct height of 35mm above the rail crown. The burner holder and burner are then removed as a unit.

11.12.3 The exothermic moulds shall be cleaned and examined for defects. Each half-mould shall then be fitted against the side of rail. Moulds may be rubbed gently against the side of the rail, if it does not fit correctly.

11.12.4 Place the half-mould and shoe centrally and vertically over the gap. The securing screw shall be in the centre of the mould shoe and the second half-mould and shoe shall be positioned exactly in line with the first half-mould. Insert cardboard, supplied by the portion manufacturer, between the rail crown and the moulds, to prevent sealing sand from entering the gap. The securing screws shall be finger-tight, to prevent damage to the

mould. Ensure that the pouring plug fits tightly into the moulds, especially where worn and new rails are joined.

11.12.5 Use the mould vertical alignment gauge to ensure that moulds are fitted vertically over the joint.

11.12.6 Premixed luting-sand is already mixed and ready for use, no water may be added.

11.12.7 Moulds shall be properly sealed and compacted with a rammer. Prevent any tapping against the mould shoes. This may lead to misalignment of the joint.

11.12.8 Sealing shall be flush with the mould shoes. Luting-sand shall be placed on the thread of the clamp to protect it from splatter.

11.12.9 The slag tray holders shall be fitted to the mould shoes, and the slag tray placed on top of the slag tray holder.

11.12.10 Cover plates shall be placed over the rails on both sides of the joint to prevent splatter damaging rails.

11.13 SETTING UP AND LOADING THE CRUCIBLE.

11.13.1 The tripod and crucible shall be placed on the universal mounting clamp away from the mould assembly. The crucible shall then be swung over the centre of the pouring plug and adjusted to 35mm above the mould.

11.13.2 The crucible shall, after the correct casting position has been obtained by adjustments, be swung away from the mould assembly to be filled.

11.13.3 An automatic thimble is included with the exothermic kit. The thimble shall be placed firmly into the crucible outlet with the thimble applicator. Spread sealing slag evenly around the thimble and remove the thimble applicator carefully. No slag may remain inside the aluminium tube, as this will delay tapping time or cause solidification.

11.13.4 The exothermic portion during the loading of the crucible shall be mixed thoroughly by shaking the bag up and down to ensure the composition of the portion is mixed thoroughly. The exothermic portion composition shall then be poured into the crucible through one’s fingers and care shall be taken that no portion particles fall into the moulds. The portion shall form a pyramid shape inside the crucible, which will aid the combustion process.

11.14 GAS PREHEATING.

11.14.1 Preheating the joint is necessary to remove moisture in the moulds and sealing sand as well as to heat the rail ends to ± 950ºC which will ensure proper fusion of the rail ends and molten metal.

11.14.2 The following gas pressures and preheating times are applicable to all 60kg/m SKV-M and 60kg/m SKV-L processes:

- Oxygen gas pressure - 300kPa
- Propane gas pressure - 100kPa
- Preheating time - 7 to 8 minutes
    - Use an exothermic casting flow gauge meter to obtain the correct gas pressure. This meter shall be mounted on the universal welding handle (Order No. 321-514, Harris).

11.14.3 Gas pressures and preheating times applicable to all welding processes used on General Freight lines:

- Oxygen gas pressure - 200kPa
- Propane gas pressure - 60kPa
- Preheating time:
    - SKV-F - 7 minutes
    - SKV-M & SKV-L - 8-minutes
        - Use an exothermic casting flow gauge meter to obtain the correct gas pressure. This meter shall be mounted on the universal welding handle (Order No. 321-514, Harris).

11.14.4 Preheating times shall always be controlled using a stopwatch.

11.14.5 A carburising flame shall be used with the preheating process. (This can be obtained by opening the LP-gas valve completely and adjusting the oxygen valve to get the correct flame).

11.14.6 The flame rising out approximately 500mm above the riser apertures is an indication that the gas flow and flame type (carburising) are correct. Under no circumstances may an oxidising flame be used, as this will oxidise the rail ends and glaze the moulds, resulting in gas vapours being trapped in the moulds, and leading to gas voids in the weld.

11.14.7 Hold the flame underneath the two slag trays to ensure that the slag trays are completely dry.

11.14.8 Place the preheating burner (block nozzle) and burner holder as a unit into the universal clamp. Ensure the burner is vertical and centred above the gap.

11.14.9 When one of the oxygen/LP-gas cylinders turns out to be empty while preheating, the preheating process shall be stopped and the empty cylinder replaced. If cracking of the moulds has occurred, the moulds shall be replaced.

11.14.10 The burner shall be removed and pouring plug positioned into the mould as soon as the required preheating time has been reached. The crucible shall then be swung into the correct position centrally over the pouring plug.

11.14.11 Gas flow, type of flame and preheating times are very important to ensure a joint that conforms to the specifications.

11.15 PETROL/AIR PREHEATING OPERATING INSTRUCTIONS.

11.15.1 Operate as specified and instructed in the manufactures manual regarding safe working procedure.

- Centralise burner in moulds.
- Start the motor.
- Set following pressure valves simultaneously.
  - Air valve.
  - Petrol Valve.
  - Combined pressure shall be 30kPa.
- Ignite burner and set flame.
- Preheating time:
  - SKV-F = 7 minutes and
  - SKV-M/L = 8 minutes, time controlled using a stopwatch.

11.16 CASTING PROCESS.

11.16.1 After the preheating time has been reached, the moulds and sealing sand will be dried out and rail ends heated to ± 950°C.

11.16.2 The igniter shall be lit, placed 20mm deep at an angle of 45° in the exothermic portion, and the crucible cover placed on top of the crucible. 20 to 25 seconds after ignition, the

molten metal will automatically flow onto the pouring plug and into the mould. After casting remove slag trays, crucible tripod, swing arms, mould shoes and universal clamp.

11.16.3 The molten metal in the rail flange and web areas solidifies first. The bigger volume of molten metal in the crown area, takes longer to solidify. Solidification progresses from the outside to the inside of the weld. Any impurities will be trapped on top of the excess metal and riser-gate stubs as these solidify last.

11.17 SHEARING OF THE EXOTHERMIC JOINT.

11.17.1 Remove all loose sand from the rail crown before placing the shearing machine into position over the joint.

11.17.2 Care shall be taken not to disturb the moulds. Damaged moulds can lead to quick cooling or run-outs, which may result in defective exothermic joints, e.g. shrinkage cavities.

11.17.3 Excess metal shall be sheared away using an approved double bladed hydraulic shearing machine.

11.17.4 Care shall be taken not to tear the cast metal when shearing the joint before metal has solidified completely. Sufficient time shall be allowed before shearing is done, as this will enable hot metal to solidify.

11.17.5 Bend risers downwards by means of two Tommy bars. Do not use a hammer.

11.18 FINISHING.

11.18.1 ROUGH GRINDING.

11.18.1.1 A layer (no less than 1mm) of cast metal shall remain on the crown after rough grinding the joint, to allow further contraction during cooling. This will ensure that the joint is not hollow after cooling.

11.18.1.2 Only after rough grinding is done and the joint has cooled down to 300°C, a train may be allowed to pass at a maximum speed of 30km/h, provided that steel support plates (150mm x 150mm) of suitable thickness have been placed between rail and sleepers.

11.18.1.3 If, after the train has passed, the rail temperature still exceeds 200°C, the sleepers shall be loosened.

11.18.1.4 After the joint has cooled down to ambient temperature, the steel support plates and wedges may be removed. The rail pads shall be replaced and all the sleepers fastened and tamped.

11.18.1.5 The beginning temperature, end temperature, and portion batch number shall be written on the prescribed field sheet and on the field side of the web, with chalk, at each joint.

11.19 RECTIFICATION.

11.19.1 The joint shall be rejected when it has cooled down to ambient temperature and the vertical alignment fault is more than 1mm, based on a straightedge measurement. A maximum of 1mm may be removed off the rail crown by grinding.

11.20 FINAL GRINDING.

11.20.1 Final grinding shall be done in such a manner that the top and gauge side of the crown are within the specified tolerances and that the profile of the rail is maintained.

11.21 MARKING OF EXOTHERMIC JOINTS.

11.21.1 The following details shall be stamped with 8mm stencils on the field side of the rail crown in proximity of the joint:

- An example of stencilled detail is shown in Figure11.1, and has the following meaning:
  - Company name (not applicable to Transnet Freight Rail), e.g. M = Metrorail, PR = Transnet Capital Projects (previously Protekon), C = Contractor, etc,
  - The Depot will allocate a code letter (except C, I, L, O, M, P and R) to the Track Welder (E.g. D).
  - The day, month and last two digits of the year. (DDMMYY).
  - Joint number e.g. Start with number 1, 2, etc, at the beginning of each work day.

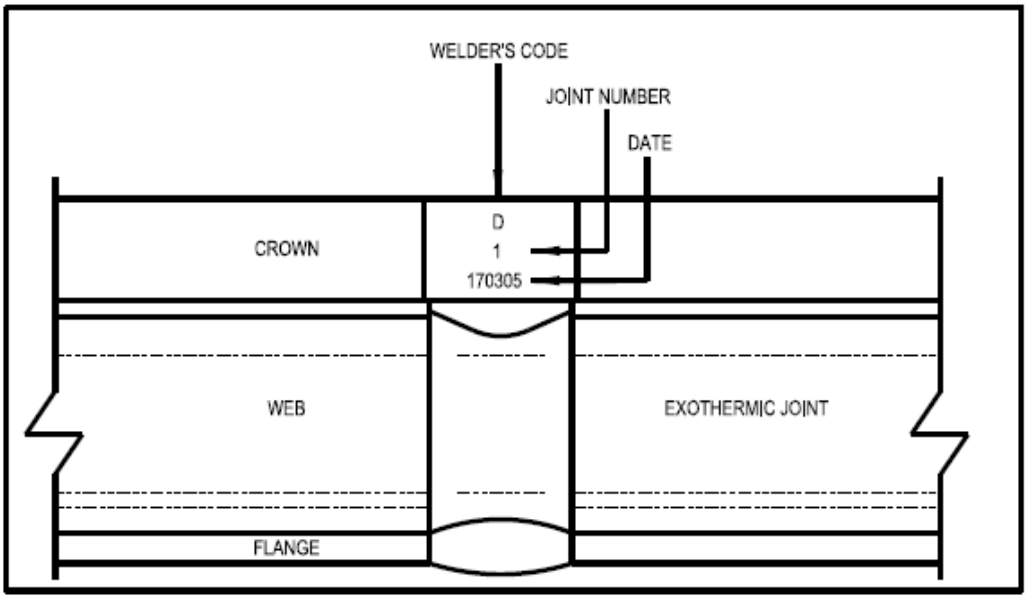

Figure 11.1. Example of joint marking.

11.21.2 Joints shall be numbered for control purposes. These numbers shall start at one at the beginning of every financial year. The Track Welder shall allocate a number to every joint and this number shall then be written on the rail web and stamped on the joint for record purposes. Use Track Welding Field sheet (Annexure 1-8) for inspections and record purposes.

11.22 INSPECTION OF EXOTHERMIC JOINTS.

11.22.1 A Technical Supervisor shall inspect the exothermic joint visually after completion of the joint.

11.22.2 Annual X-ray tests of exothermic joints shall be conducted.

11.22.3 All exothermic joints cast by contractors shall be tested by means of X-ray and ultrasonic method, and defective joints shall be replaced.

11.23 STANDARDS AND TOLERANCES.

11.23.1 Final grinding and cleaning of all exothermic joints shall be done within 24 hours after casting the joint.

11.23.2 All mould material shall be removed, with a suitable blunt tool, from the joint, as soon as possible after the joint has cooled down to ambient temperature.

11.23.3 The joint shall be sound, without cracks, slag, sand inclusions, undercuts, porosity, or any foreign matter. A mirror shall be used for inspection purposes.

11.23.4 Joint alignment shall be as follows: (Annexure 11-1).

- **VERTICAL ALIGNMENT.**

The flange of rail and crown shall be vertically aligned to a tolerance of 3mm.

- **SQUARE ALIGNMENT.**

The edge of the collar on one side of the flange shall be horizontally aligned to the edge of the collar on the opposite side of the flange to a tolerance of 3mm.

- **HALVE-MOULD ALIGNMENT.**

The two mould halves shall be aligned under the flange to a tolerance of 3mm.

11.23.5 A 0.2mm feeler gauge may not fit anywhere between the rail crown and a 1m straightedge, which shall be placed longitudinally and centrally over the joint.

11.23.6 A 0.2mm feeler gauge may not fit anywhere between the rail crown and a 1m straightedge, which shall be placed longitudinally on the gauge side of the crown and centrally over the joint. (The same applies on the field side in case of future transposing).

11.24 EXOTHERMIC PROCESSES WITH UNIQUE STANDARDS AND PARAMETERS.

11.24.1 Preheating parameters for exothermic casting with Oxy/LP-gas shall be applied as per Table 11.4, and Petrol/air as per Table 11.5.

11.25 EXOTHERMIC CASTING OF RAILS: 24 TO 26MM GAP (SKV-F).

11.25.1 GENERAL.

11.25.1.1 The procedures described in Paragraphs 11.1 to 11.24 shall be strictly followed in conjunction with Paragraph 11.25.

11.25.1.2 Chrome-manganese rails shall be treated as indicated in Table 11.3.

11.25.2 PREPARATION OF THE JOINT.

11.25.2.1 A gap of 24-26mm for SKV-F is required to ensure adequate fusion between the exothermic metal and rails.

11.25.2.2 Rail ends shall be tested for cracks by using dye penetrant.

11.25.2.3 Rail ends shall be lifted 1mm to compensate for sagging caused by applied heat.

11.25.3 POST-CASTING PROCEDURES.

11.25.3.1 See Tables 11.4 and 11.5 for relevant parameters.

11.25.3.2 Loose sand on the rail crown shall be removed.

11.25.3.3 Excess cast metal shall be removed by means of a hydraulic shearing machine. Risers shall be bent vertically, away from joint.

11.25.3.4 Chrome-manganese rail joints shall immediately after shearing, but no later than 8 minutes after casting, be covered completely with an approved insulating material for at least 30 minutes.

Table 11.4. Parameters for Exothermic casting using Oxy/LP gas preheating method.

Description	SKV-F Weld	SKV-F Cr-Mn 48kg/m- and 57kg/m	SKV-M Weld	SKV-L Weld	SKV-M 60kg/m	SKV-L 60kg/m
Gap	24 – 26 mm		35 – 40mm	40 – 50mm	35 – 40mm	40 – 50mm
Burner Type(Block Nozzle)	32 holes					
Burner Height	35mm					
Pre-heat time: 48kg/m 57kg/m	7minutes				8minutes	
Gas Pressures: (Flow Pressure) At exothermic test gauge assembly	200 kPa oxygen 60 kPa propane				300 kPa oxygen 100 kPa propane	
Flame Length	500mm					
Remove Tri-Pod, Crucible and Slag trays	2minutes		3minutes		3minutes	
Remove universal clamp and mould shoes	3minutes		4minutes		4minutes	
Shearing after "X" minutes from pour	5-6minutes SKV-F		SKV-M or L 6-7minutes			
Treatment of weld	No retarded cooling	Cover Cr-Mn joints with Insulating Blanket within 8min after casting for 30min		No retarded cooling	Cover Cr-Mn joints with Insulating Blanket within 11min after casting for 30min	

11.25.3.5 NOTE: For HH rail parameters remain the same – except for no retarded cooling. For composite joints the rail parameters remain the same for SKV-F.

Table 11.5. Parameters for Exothermic casting using Petrol/air preheating method.

Description	SKV-F Weld	SKV-F Cr-Mn 48kg/m- and 57kg/m	SKV-M Weld	SKV-L Weld	SKV-M 60kg/m	SKV-L 60kg/m
Gap	24 – 26 mm		35 – 40mm	40 – 50mm	35 – 40mm	40 – 50mm
Burner Type (Special Type)	Petrol Air Burner					
Burner Height	65mm					
Pre-heat time: 48kg/m 57kg/m	7minutes				8minutes	
Pressure on Gauge	Pump Sutobilt: 30kPa Green Pump: 25kPa				Pump Sutobilt: 30kPa Green Pump: 25kPa	
Flame Length	500mm					
Remove Tri-Pod, Crucible and Slag Trays	2munits		3munites		3munites	
Remove Universal Clamp and mould shoes	3minutes		4minutes		4minutes	
Strip after X minutes from pour	5-6minutes		SKV-M or L 6-7minutes			
Treatment of weld	No retarded cooling	Insulating Blanket to be on 8minutes after pour only for Cr-Mn rails		No retarded cooling	Insulating Blanket to be on 11minutes after pour only for Cr-Mn rails	

11.25.3.6 Note: Cr-Mn rails in Tables 11.4 and 11.5 also include 2MCC and UIC-C rails.

11.25.3.7 Apply retarded cooling in accordance with Table 11.3.

11.25.3.8 After joint has reached ambient temperature, the risers shall be bent upwards.

11.25.3.9 All mould material shall be removed from joint collar. Joint surroundings shall be cleaned with a chisel, ball peen hammer and wire brush.

11.26 EXOTHERMIC CASTING: 35-40MM GAP (SKV-M) AND 40-50MM GAP (SKV-L).

11.26.1 GENERAL.

11.26.1.1 The procedures described in Paragraphs 11.1 to 11.24 shall be strictly followed in conjunction with Paragraph 11.26.

11.26.1.2 Chrome-manganese rails shall be treated as indicated in Table 11.3.

11.26.1.3 The 40-50mm Gap (SKV-L) exothermic portion shall be used where an existing exothermic (SKV-F) joint has to be removed, or where rail gaps are larger than those prescribed for SKV-F joints. (The old joint shall be removed completely).

11.26.2 PREPARATION OF THE JOINT.

11.26.2.1 A 35-40mm gap for SKV-M or 40-50mm gap for SKV-L is required to ensure adequate fusion between the exothermic metal and rails.

11.26.2.2 Rail ends shall be tested for cracks by using dye penetrant.

11.26.2.3 Rail ends shall be lifted 2mm to compensate for sagging caused by applied heat.

11.26.3 POST-CASTING PROCEDURES.

11.26.3.1 See Tables 11.4 and 11.5 for parameters.

11.26.3.2 Loose sand on the rail crown shall be removed.

11.26.3.3 Excess cast metal shall be removed by means of a hydraulic shearing machine. Risers shall be bent vertically, away from joint.

11.26.3.4 Chrome-manganese rail joints shall immediately after shearing, but no later than 8 minutes after casting, be covered completely with an approved insulating material for at least 30 minutes.

11.26.3.5 Apply retarded cooling in accordance with Table 11.3.

11.26.3.6 After joint has reached ambient temperature, the risers shall be bent sideways.

11.26.3.7 All mould material shall be removed from joint collar. Joint surroundings shall be cleaned with a chisel, ball peen hammer and wire brush.

11.27 EXOTHERMIC CASTING OF COMPOSITE JOINTS 24-26MM GAP (SKV-F).

11.27.1 GENERAL.

11.27.1.1 The procedures described in Paragraphs 11.1 to 11.24 shall be strictly followed in conjunction with Paragraph 11.27.

11.27.1.2 Chrome-manganese rails shall be treated as indicated in Table 11.3.

11.27.1.3 A Junction joint is the joining of different rail profiles e.g. 40kg/m to 48kg/m rails, 48kg/m to 57kg/m rails, or 57kg/m to 60kg/m rails. Junction joints require the use of exothermic composite mould kits and mould shoes.

11.27.1.4 When a 40kg/m and 57kg/m rail are joined, a 48kg/m closure rail and appropriate composite kits shall be used to join the adjacent rails to the 48kg/m closure rail.

11.27.1.5 Left-hand and right-hand sets shall be manufactured when junction rails are manufactured off-track.

11.27.2 PREPARATION OF THE JOINT.

11.27.2.1 A gap of at least 24-26mm for SKV-F is required to ensure adequate fusion between the exothermic metal and rails.

11.27.2.2 Rail ends shall be tested for cracks by using dye penetrant.

11.27.2.3 Rail ends shall be lifted 1mm to compensate for sagging caused by applied heat.

11.27.2.4 The top and running side of the crown shall be aligned with the aid of a 1m straightedge. A deviation in the alignment will however occur at the flange.

11.27.2.5 Maximum allowable rail height differences are displayed in Table 11.6. When the limits in Table 11.6 are exceeded, suitable closure rails shall be used.

Table 11.6. Rail height difference limits.

Joint profiles	Max height difference (mm)	Min height difference (mm)
40/48	26	20
48/57	18	12
57/60	3	3
57/UIC60 or S60	10	4

11.27.3 POST-CASTING PROCEDURES.

11.27.3.1 See Tables 11.4 and 11.5 for parameters.

11.27.3.2 Loose sand on the rail crown shall be removed.

11.27.3.3 Excess cast metal shall be removed by means of a hydraulic shearing machine. Risers shall be bent vertically, away from joint.

11.27.3.4 Chrome-manganese rail joints shall immediately after shearing, but no later than 8 minutes after casting, be covered completely with an approved insulating material for at least 30 minutes.

11.27.3.5 Apply retarded cooling in accordance with Table 11.3.

11.27.3.6 All mould material shall be removed from joint collar. Joint surroundings shall be cleaned with a chisel, ball peen hammer and wire brush.

11.27.3.7 After joint has reached ambient temperature, the risers shall be bent upwards.

11.28 EXOTHERMIC CASTING OF TURNOUT SETS 24-26MM GAP (SKV-F).

11.28.1 GENERAL.

11.28.1.1 The procedures described in Paragraphs 11.1 to 11.24 shall be strictly followed in conjunction with Paragraph 11.28.

11.28.1.2 Chrome-manganese rails shall be treated as indicated in Table 11.3.

11.28.1.3 Exothermic composite mould kits 48kg/m to 51kg/m rails shall be used when joining stock rails and switch blades.

11.28.2 PREPARATION OF THE JOINT.

11.28.2.1 A 24-26mm gap for SKV-F is required to ensure adequate fusion between the exothermic metal and rails.

11.28.2.2 Rail ends shall be tested for cracks by using dye penetrant.

11.28.2.3 Rail ends shall be lifted 1mm to compensate for sagging caused by applied heat.

11.28.2.4 When inclined (1:20) and vertical rails at turnout sets are joined, the crown and flange shall be aligned. For this purpose a rail alignment device shall be used (Manual for Track Maintenance (2000)).

11.28.3 POST-CASTING PROCEDURES.

11.28.3.1 See Tables 11.4 and 11.5 for parameters.

11.28.3.2 Loose sand on the rail crown shall be removed.

11.28.3.3 Excess cast metal shall be removed by means of a hydraulic shearing machine. Risers shall be bent vertically, away from joint.

11.28.3.4 Chrome-manganese rail joints shall immediately after shearing, but no later than 8 minutes after casting, be covered completely with an approved insulating material for at least 30 minutes.

11.28.3.5 Apply retarded cooling in accordance with Table 11.3.

11.28.3.6 All mould material shall be removed from joint collar. Joint surroundings shall be cleaned with a chisel, ball peen hammer and wire brush.

11.28.3.7 After joint has reached ambient temperature, the risers shall be bent upwards.

11.28.4 GRINDING.

11.28.4.1 A MC2 grinding machine and angle grinder shall be used where a MP12 grinding machine cannot be used.

11.29 EXOTHERMIC CASTING ON CONCRETE SLABS.

11.29.1 GENERAL.

11.29.1.1 The procedures described in Paragraphs 11.1 to 11.24 shall be strictly followed in conjunction with Paragraph 11.29.

11.29.1.2 Chrome-manganese rails shall be treated as indicated in Table 11.3.

11.29.1.3 Exothermic casting of rails on concrete slabs mainly occurs in tunnels. Spacers are necessary to lift the rail ± 80mm from the concrete slab, to fit exothermic mould kits.

11.29.2 EQUIPMENT AND CONSUMABLES.

11.29.2.1 The following shall be used:

- 3-piece mould kit.
- One pair special mould shoes and one bottom tray.
- One pair special refractory moulds and one bottom slab.
- Fifteen special spacers, (75mm x 75mm x 8mm angle iron), two round bars (16mm diameter) which are welded to each angle iron to fit into the holes of the Pandrol chairs/shoulders.

11.29.3 PREPARATION OF THE JOINT.

11.29.3.1 The 15 special spacers shall be evenly spaced over a distance of 20m on both sides of the joint to lift the track ± 80mm.

11.29.3.2 Bottom tray shall be fitted underneath the flange.

11.29.3.3 Two half-moulds shall be fitted over the gap and the refractory tile shall be fixed to the bottom of the moulds. The tile and the moulds shall fit sound before sealing begins.

11.29.3.4 The gap between the tile and the bottom tray shall be sealed with sealing sand. The flat side of the refractory tile shall under no circumstances be placed against the rail, as it may cause contracting cracks and insufficient fusion underneath the flange. The collar formation of the bottom shall face upwards.

11.29.3.5 Mould shoes shall be positioned over the moulds and tightened slightly. The gaps between the mould shoes and the rail shall be sealed.

11.29.3.6 All openings between the mould shoes, refractory tile and rail shall be properly sealed.

11.29.4 POST-CASTING PROCEDURES.

11.29.4.1 See Tables 11.4 and 11.5 for parameters.

11.29.4.2 Loose sand on the rail crown shall be removed.

11.29.4.3 Excess cast metal shall be removed by means of a hydraulic shearing machine. Risers shall be bent vertically, away from joint.

11.29.4.4 Chrome-manganese rail joints shall immediately after shearing, but no later than 8 minutes after casting, be covered completely with an approved insulating material for at least 30 minutes.

11.29.4.5 Apply retarded cooling in accordance with Table 11.3.

11.29.4.6 All mould material shall be removed from joint collar. Joint surroundings shall be cleaned with a chisel, ball peen hammer and wire brush.

11.29.4.7 After joint has reached ambient temperature, the risers shall be bent upwards.

11.30 EXOTHERMIC CASTING OF CRANE RAILS WITH 24-26MM GAPS (SKS).

11.30.1 Exothermic casting kits and procedures for crane rails are available on special request from the supplier.

CHAPTER 12 – REPAIRING RAIL-MANUFACTURED CROSSINGS.

12.1 GENERAL.

12.1.1 The turnout is the single most expensive item in track and incorrect welding procedures can be detrimental. For this reason, quality work is of utmost importance.

12.1.2 Good co-operation and planning between Maintenance and Production personnel is therefore necessary to ensure the best results.

12.1.3 Repairs to rail-manufactured crossings may be done by Track Welders, who have been declared competent by an accredited person from Central office in conjunction with Esselen Park or an approved body.

12.2 DEFINITIONS AND METHODS OF MEASUREMENT.

12.2.1 POINT X.

12.2.1.1 Point X is a reference point measured 1m from the tip of the crossing nose in the trailing direction.

12.2.2 POINTS H_1 AND H_2.

12.2.2.1 Points H_1 and H_2 are 25mm from the running side of the crown on both sides of the crossing nose in line with point X. These are the points where crown wear is measured using a depth gauge, or feeler gauge with a 1m straightedge (Annexures 12-1 to 12-4).

12.2.3 CROWN WEAR H.

12.2.3.1 Crown wear H is the larger of the two measurements at points H_1 and H_2 (Figure 12.1).

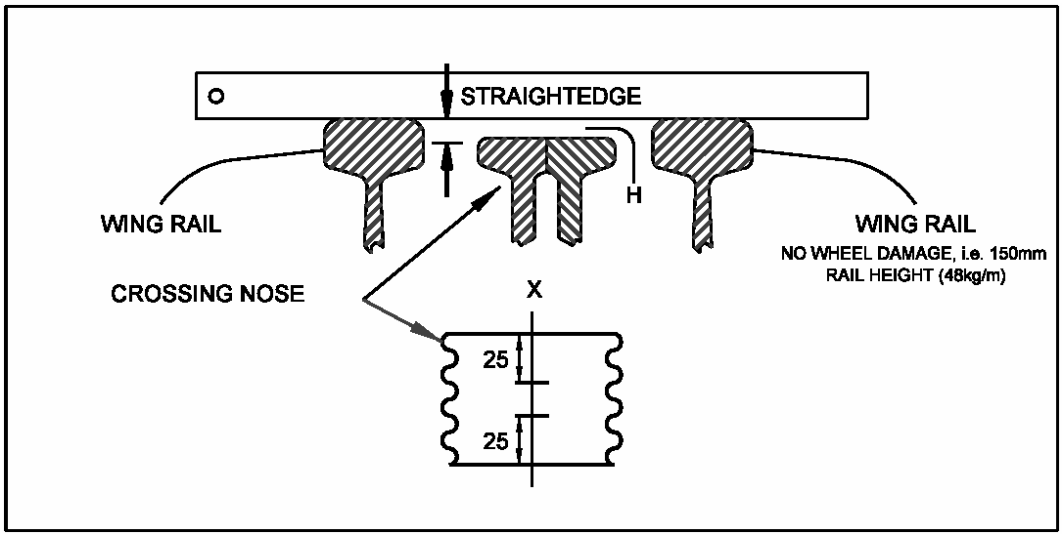

Figure 12.1. Crown Wear H.

12.2.3.2 Crown wear H will be used to determine the position of point P (Annexures 12-1 and 12-2 for 1:9 crossings, and Annexures 12-3 and 12-4 for 1:12 crossings).

12.2.3.3 No crown wear H exists at X on a new crossing.

12.2.4 POINT P.

12.2.4.1 Point P is 25mm from the tip of the splice, measured in the facing direction on all new rail-manufactured crossings.

12.2.4.2 Determining the position of point P on a crossing depends on the degree of crown wear. Distance from the tip of the nose to the tip of the splice rail is:

- 1:9 crossings - ±555mm.
- 1:12 crossings - ±720mm.

12.2.4.3 Length of decline at the tip of the nose is 70mm for 1:9 and 1:12 crossings.

12.2.4.4 Point P may not be closer than 250mm from the tip of the nose.

12.2.4.5 70mm from the tip of the nose in the trailing direction, the height difference between the nose and wings shall be 6.4mm, which makes provision for the profile of a new train wheel (Annexures 3-2 and 12-5).

12.2.4.6 The effective nose surface length for a new crossing is:

- 555mm – 70mm – 25mm = 460mm for a 1:9 crossing.
- 720mm – 70mm – 25mm = 625mm for a 1:12 crossing.

12.2.4.7 The position of point P for a worn crossing shall be determined as follows. Divide the effective nose surface length by 6.4, to divide the nose length into intervals of:

- 460/6.4 = 72mm for a 1:9 crossing.
- 625/6.4 = 98mm for a 1:12 crossing.

12.2.4.8 For every 1mm of crown wear H, point P moves one interval closer to the point of the nose. Example:

- Point P on a new 1:9 crossing is 25mm from the tip of the splice rail.
- Point P on a 1:9 crossing with 1mm crown wear H is 25mm + 72mm = 97mm from the tip of the splice rail.
- Point P on a 1:9 crossing with 2mm crown wear H is 25mm + 72mm + 72mm = 169mm from the tip of the splice rail.
- Etc. (Annexure 12-1).

12.2.4.9 Table to determine position of point P.

Table 12.1. Position of point P depending on crown wear H.

Crown wear H	Point P's distance from the tip of the splice rail in the facing direction	
	1:9 Crossings	1:12 Crossings
0mm	25mm	25mm
1mm to 1,49mm	97mm	123mm
1.5mm to 2.49mm	169mm	221mm
2.5mm to 3.49mm	241mm	319mm
3.5mm to 4.49mm	305mm	417mm
greater than 4.5mm	305mm	470mm

12.2.5 AREA Q.

12.2.5.1 Area on the wings damaged by train wheels at the transfer area is defined as Q (mm^2).

12.2.6 AREA R.

12.2.6.1 Area on the nose damaged by train wheels at the transfer area is defined as R (mm^2).

12.2.7 POINT E.

12.2.7.1 Point E is the point where wheel contact becomes visible on the wings (trailing side).

12.2.8 POINT F.

12.2.8.1 Point F is 100mm from point E on the wings in the trailing direction (Figure 12.2).

12.2.9 POINT D.

12.2.9.1 Point D indicates where welding on the wings will stop on the facing side (Figure 12.2).

12.2.9.2 Determining the location of point D will be further discussed in Paragraph 12.6.2.4 (Figure 12.2).

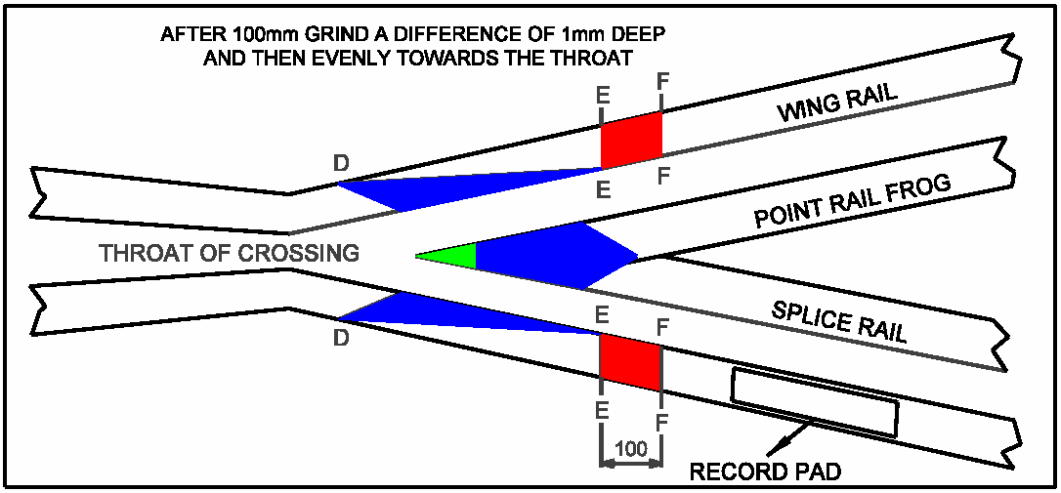

Figure 12.2. Location of Points E, D and F.

12.2.10 DISTANCE L.

12.2.10.1 L is the distance between point P and point X on the nose. After welding, the section between point P and point X shall have constant height.

12.2.11 POINT S.

12.2.11.1 Point S is 70mm from the tip of the nose in the trailing direction. The distance between point S and the tip of the nose shall at all times remain 70mm.

12.2.12 DISTANCE M.

12.2.12.1 M is the distance between point P and point S (Figure 12.4).

12.2.13 POINT C.

12.2.13.1 Point C indicates the end of the welding area on the nose (trailing side).

12.2.14 RECORD PAD.

12.2.14.1 The record pad is brazed on the end of the right (when facing the trailing side) wing rail (Figure 12.2).

12.2.14.2 Information that shall be recorded on the record pad includes the welder code, date maintained, turnout number and G or W indicating whether grinding or welding was done.

12.2.14.3 The dimensions of the record pad are 150mm x 50mm.

12.3 INSPECTION, DECISION MAKING AND PLANNING.

12.3.1 Maintenance (track) Personnel are responsible for the inspection of turnout sets, slips and crossings, and where any abnormal wear or defects occur, necessary arrangements shall be made to do repair work. This inspection includes determining crown wear H and, based on that (amongst other factors), prioritizing the particular turnout for maintenance.

12.4 PROTECTION OF TRAINS AND THE SAFEGUARDING OF PERSONNEL.

12.4.1 Protection of trains and the safeguarding of personnel shall be done in accordance with Spoornet General Appendix No 6 (Part 1).

12.4.2 Repairs to rail-manufactured crossings may be undertaken between trains or under total occupation.

12.5 SAFE WORKING PROCEDURE.

12.5.1 Refer to Chapter 2.

12.6 PREPARATION.

12.6.1 PREPARATION BY TRACK PERSONNEL.

12.6.1.1 Track personnel shall ensure that the track formation is well drained and that there is sufficient clean ballast.

12.6.1.2 The crossing and adjacent track shall be de-stressed before welding, as broken or bent crossing bolts indicate stress.

12.6.1.3 Excessive side wear and/or cracks may not be present on the crossing.

12.6.1.4 Sleepers shall be in a good condition and properly tamped, and all crossing bolts and coach screws shall be inserted and tightened.

12.6.1.5 Excessively worn rail fasteners shall be replaced.

12.6.1.6 Track geometry shall conform to the relevant standard (depending on line type) before welding/preventative grinding commences.

12.6.1.7 All Nylock nuts shall be removed and replaced with standard nuts before preheating commences.

12.6.1.8 All crossing and sleeper fastenings shall be loosened to allow for contraction and expansion caused by applied heat.

12.6.2 PREPARATION BY WELDING PERSONNEL.

12.6.2.1 Ensure that all undesirable matter, such as grease, oil and rust are removed from the immediate working area.

12.6.2.2 Precautions shall be taken during the preheating and welding process to prevent wooden sleepers from being damaged by heat.

12.6.2.3 Determining of the area to be welded on the nose:

- Place the one end of the straightedge on the feeler gauge with crown wear measurement H obtained at point X, and the other end towards the trailing direction.
- The point where light stops shining underneath the 1m straightedge is point C, which identifies where welding shall stop.

12.6.2.4 Determining of the areas to be welded on the wings:

- Mark out points E and F.
- Grind between points E and F until the rail height (measured with an outside calliper) between points E and F is equal to the original rail height minus crown wear H (indicated red in Figure 12.2).
- Lower the wings gradually from point E in the direction of the throat by grinding so that the rail height is constant between point F and the throat area.
- Place the one end of the straightedge on point E and the other end towards the throat of the crossing.
- The point where light stops shining underneath the 1m straightedge is point D, which identifies where welding shall stop.

12.6.3 GRINDING PRIOR TO WELDING.

12.6.3.1 Before any welding work can commence, all loose and work-hardened metal as well as hairline cracks shall be removed with a MC2 grinding machine.

12.6.3.2 All overlaps and previous welding deposits shall be removed by grinding.

12.6.3.3 In cases where a rail-manufactured crossing had undergone repair welding in the past, grinding shall be done 3mm deep or until other defects have been removed. This will ensure the removal of all defects such as:

- Slag inclusion.
- Undercutting.
- Porosity.

12.6.3.4 Dye penetrant shall be used to ensure that all defects have been removed. The surface shall be cleaned thoroughly with a steel brush before testing with dye penetrant.

12.6.3.5 During grinding work slight pressure shall be applied. Care shall be taken that grinding stones are not damaged or clogged with fine steel. Using damaged grinding stones could be fatal.

12.6.3.6 In cases where grinding the running surface deeper than 12mm is required, the track personnel shall be notified in order for them to decide whether the passage of trains is safe.

12.7 PREHEATING.

12.7.1 Preheating of different types of rails shall be done strictly as set out in Chapter 5.

12.7.2 The spacing blocks and rails shall be pre-heated simultaneously to delay cooling.

12.7.3 The area to be welded, shall be pre-heated gradually on both sides of the rail (up to 100mm past the area to be welded), evenly to and fro over the flange, web and crown by means of a 900mm stainless steel tip tube with a 3H heating nozzle.

12.7.4 Rail-manufactured crossings are manufactured from different grades of steel. If the roll marks are not visible, the rail type shall be assumed to be UIC-A.

12.8 WELDING PROCESSES.

12.8.1 PRECAUTIONS.

12.8.1.1 Employees and the public shall be protected against the danger of open-arc flashes.

12.8.1.2 No welding is allowed in rain or fog.

12.8.1.3 The earth cable shall be fitted with an approved clamp and clamped next to the welding area to prevent short circuits and the loss of current.

12.8.1.4 The welding arc length shall be kept as short as possible – approximately the core thickness of the electrode that is used for welding. Welding beads on all types of rails may not be longer than 150mm to control the heat. Welding beads shall be deposited in such a manner that the one bead overlaps the other. Welding deposits shall be cleaned directly after welding.

12.8.1.5 Peen every welding bead softly with the ball of a 1kg hammer to relieve the internal stress, which could lead to future defects. If cracks, porosity, undercutting, grooves, cavities or slag inclusions appear in the welding work, the whole defect shall be removed by means of grinding.

12.8.1.6 Pre-heat the rail to the prescribed temperature before welding commences.

12.8.1.7 Welding repairs of rail-manufactured crossings can be done by means of manual metal arc welding (MMA, a constant current (CC) process), or flux-cored arc wire (FCAW, a constant voltage (CV) process).

12.8.2 WELDING METHOD ON THE CROSSING.

12.8.2.1 The method that is used to weld rail-manufactured crossings is called the stringer bead method. This method is shown in Figure 12.3 and discussed below:

12.8.2.2 Welding method on the nose (from point C to tip of nose; Figure 12.3). This method eliminates slag inclusion and ensures that heat is evenly distributed.

- Weld bead 1 in the middle of the nose.
- Weld bead 2 on the right side of bead 1.
- Weld bead 3 on the left side of bead 1.
- Weld bead 4 next to bead 2.
- Weld bead 5 next to bead 3.

- Follow this sequence until the full width of the crown has been welded.

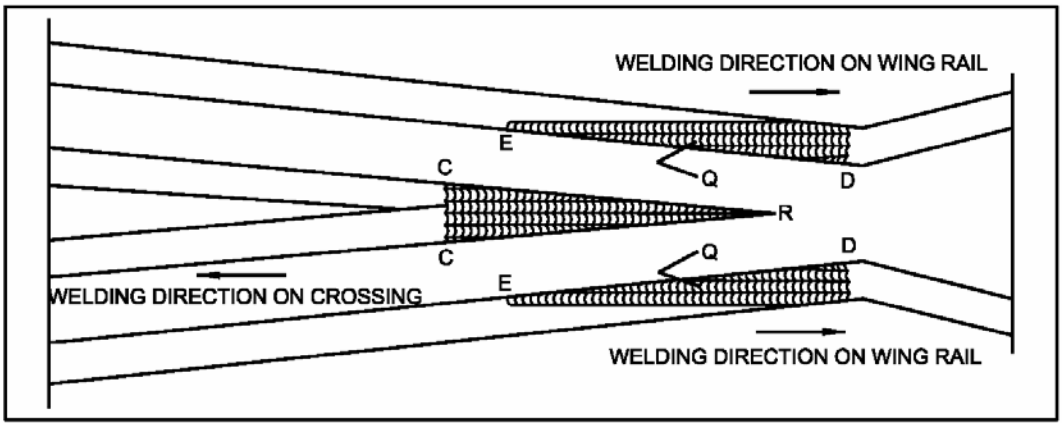

Figure 12.3. Welding method.

12.8.2.3 Welding method for the wing rails (area between points D-E shown in Figure 12.3).

- Weld bead 1 at the edge of running side.
- Weld bead 2 next to bead 1.
- Weld bead 3 next to bead 2.

12.8.2.3.1 This sequence shall be repeated until the full width of the crown has been welded.

12.8.2.3.2 This process shall be followed until the welded area is 3mm higher than the required height. This will ensure a smooth and even surface after grinding.

12.8.2.3.3 Welding beads shall be deposited next to each other on both sides of the splice joint, in such a manner that the point and splice rails are not welded together, as this will cause metal breakouts. After welding, the splice shall be cut open using an angle grinder with a 3mm cutting disc, to minimize metal flow and breakouts.

12.9 FINAL GRINDING.

12.9.1 A MC2 grinding machine shall be used for grinding crossings.

12.9.2 Grinding the wing rails shall be done in accordance with the standards and tolerances in Paragraph 12.10.

12.9.3 Grinding on the nose shall be done from point S in the direction of point P. A contour gauge (Annexure 3-2) shall be used to ensure the 6.4mm height difference between point S and the wings. The area where grinding is done shall be marked with yellow chalk. Grinding shall be done with an even incline in the direction of point P until the 1m straightedge reaches the yellow chalk mark.

12.9.4 Grinding on the point rail and splice rail shall be done in a manner that ensures the following:

- A constant rail height from point P to point X.
- A height difference of no less than 3mm between point P and point S.

12.9.5 This shall be measured by placing a straightedge longitudinally on the point rail. Care shall be taken that the yellow chalk marks at point P and point S are not disturbed during grinding.

12.9.6 Final grinding on the wing shall be done from point F towards the facing side until specified standards and tolerances are reached (Figure 12.2).

12.9.7 After rough grinding and before final grinding:

- Divide the nose into two equal parts using a chalk line.
- Using the 1:20 contour gauge, grinding the nose shall be done on both sides of the chalk line, ensuring the 1:20 inclination.
- After this, restore the 13mm radius to the nose and wings, by grinding.

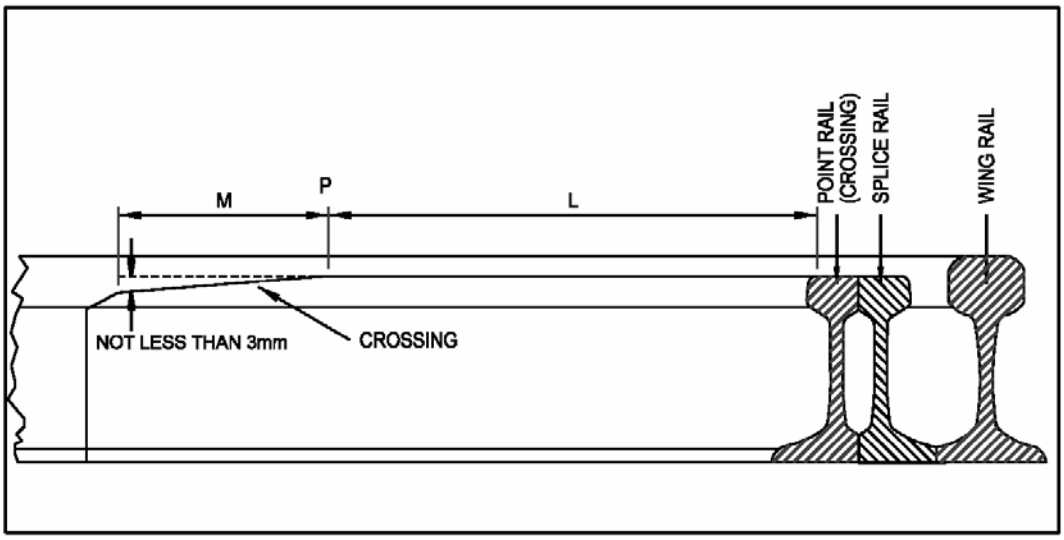

Figure 12.4. Indication of Distances M and L.

12.9.8 By grinding the 1:20 inclination and 13mm radius correctly, metal flow and breakouts on the crossing will be minimized. The original profile of the splice and point rail shall be maintained.

12.9.9 Always remember when grinding the crossing, the crossing nose should fit the wings and not the wings the crossing nose.

12.9.10 Ensure that the point rail and splice rail are cut open with an angle grinder, 5mm deep with a 3mm cutting disc, at an angle of 45°. This will minimize metal flow and breakouts which could lead to defects.

12.9.11 Any remaining grooving as well as sound grinding shall be done with an angle grinder.

12.9.12 The crossing shall be tested with a dye penetrant for defects.

12.10 STANDARDS AND TOLERANCES.

12.10.1 A feeler gauge of 0.2mm may not enter anywhere underneath a 1m straightedge placed on the crossing nose and wing rails in the longitudinal direction.

12.10.2 Once the crossing has been repaired, all defects shall have been removed, including:

- Broken chairs.
- Wheel-spin burns.
- Battered rail ends and dipped joints.
- Incorrect inclination and radius.
- Loose and missing fastenings.
- Out of standard track geometry (by means of tamping and/or component replacement).

12.10.3 All daily work performed shall be logged on the prescribed field sheet (Annexure 1-8).

12.10.4 A Technical Superintendent or his representative shall inspect all welding work. Thereafter a report shall be submitted to the Depot Engineer.

12.10.5 The Brinell hardness of the parent metal shall be approximately 280.

CHAPTER 13 – REPAIRING 14% CAST MANGANESE (MONOBLOCK) CROSSINGS.

13.1 GENERAL

13.1.1 Monoblock crossings offer greater stability than rail-manufactured crossings and have better design characteristics such as built-in cant in the wings, which ensures smoother transition of the wheels.

13.1.2 Monoblock crossings are manufactured from 14% manganese steel, which has work-hardening ability and a life span that exceeds that of rail-manufactured crossings by up to three times.

13.1.3 The unique chemical composition of 14% manganese steel comprises of 1 to 1.2% carbon, and 12 to 14% manganese (HATFIELD STEEL), which is very brittle.

13.1.4 Austenitic structures are not stable, resulting in precipitation of the carbide structure when material is exposed to temperatures of more than 200ºC. This is attributable to very high carbon content in the steel, which forms carbides on grain boundaries and causes the cast piece to break easily.

13.1.5 Only qualified artisan welders, who have successfully passed the relevant modules from the Advanced Track Welding course, may be used for this process.

13.2 DEFINITIONS AND METHODS OF MEASUREMENT.

13.2.1 POINT P.

13.2.1.1 Point P is located 167mm from the PI for 1:9 turnouts (48kg/m), 215mm for 1:12 turnouts (48kg/m) and 230mm for 1:12 turnouts (57kg/m), measured in the trailing direction on all cast monoblock crossings (Annexure 13-1).

13.2.2 AREA Q.

13.2.2.1 Area on the wings damaged by train wheels at the transfer area (approximately between points D and E) is defined as Q (mm^2) (Annexure 13-1).

13.2.3 AREA R.

13.2.3.1 Area on the nose and insert damaged by train wheels at the transfer area (approximately the area between the PI and point C) is defined as R (mm^2) (Annexure 13-1).

13.2.4 POINT E.

13.2.4.1 Point E is ±600mm from the PI in the trailing direction for 1:12 crossings and ±500mm for 1:9 crossings on both wings (Annexure 13-1).

13.2.5 POINT D.

13.2.5.1 Point D indicates where welding on the wings will stop on the facing side.

13.2.5.2 Determining the location of point D will be further discussed in Paragraph 13.5.4.2.3.

13.2.6 DISTANCE L.

13.2.6.1 L is the distance between point P and point C on the nose. After welding, the section between point P and point C shall have constant height.

13.2.7 DISTANCE M.

13.2.7.1 M is the distance between point P and the tip of the nose.

13.2.8 POINT C.

13.2.8.1 Point C indicates the end of the welding area on the nose (trailing side).

13.2.9 RECORD PAD.

13.2.9.1 The record pad is welded onto the crossing as indicated in Annexure 13-1.

13.2.9.2 Information that shall be recorded on the record pad include the welder code, date maintained, turnout number and G or W indicating whether grinding or welding was done.

13.3 INSPECTION AND DECISIONMAKING.

13.3.1 The purpose of condition assessment and safety inspections is to determine in advance when, which and where repairs have to be done to a crossing.

13.3.2 Preventative grinding shall be done within the first month after new turnouts were installed in track, to prevent metal flow caused by the work hardening process. Preventative grinding shall be done in accordance with Chapter 6.

13.3.3 Maintenance personnel are responsible for visual inspection of monoblock crossings, and the necessary corrective work shall be arranged if any abnormal wear or defects are present.

13.3.4 Condition assessment of monoblock crossings shall be carried out at least once a year. The following measuring equipment applies:

- Feeler/Taper gauge.
- Crossing contour gauge (Annexure 3-1).
- 1m straightedge.

13.3.5 Condition assessment (wear measurement, description of cracks or any other defects, remarks and recommendations) shall be recorded on the appropriate track welding field sheet. The relevant work shall be prioritised as prescribed in Paragraph 13.3.7. The completed forms shall be forwarded to the Maintenance Manager for notification and decision-making.

13.3.6 All foreign matter shall be removed from a crossing for inspection purposes.

13.3.7 Crossing wear and repair actions.

Table 13.1. Crossing wear and repair actions.

Track Standard	Wheel damage at Point P	Work to be perform on Turnout
A	0 – 1mm	Preventative Grinding
B	1.1 – 2mm	Preventative Grinding
B1	2.1 – 3mm	Preventative Grinding
B2	3.1 – 4mm	Preventative Grinding (GFB Lines) Weld Crossings (Heavy Haul Lines)
	4.1 – 5mm	Weld Crossings (GFB Lines)
B3	5.1 – 7mm	Weld Crossing (Bad)
C	7.1 – 8mm	Weld Crossing (Very Bad)
C1	Cracks and breakouts	Weld Crossing (Urgent)

13.3.8 The following types of defects may be encountered at monoblock crossings:

- Small vertical and horizontal cracks.
- Wheel damage to the nose and wings of the crossing.
- Visible casting defects.

- Metal breakouts at the nose and wings of crossings.
- Excessive overlaps.
- Sharp edges.
- Wheel-spin burns.

13.3.9 The following defects may result in a crossing being classified as being beyond repair:

- Excessive wheel damage and corrosion.
- Un-repairable and excessive casting defects.
- Horizontal and vertical cracks in boltholes.
- Horizontal and vertical cracks on the cast piece.
- Wear on the cast piece caused by train wheels.

13.3.10 Unevenness to running surfaces of the monoblock crossing may develop as result of work hardening, and shall be rectified by means of preventative grinding.

13.4 ELECTRODES AND FLUX-CORED WIRE.

13.4.1 Only electrodes and flux-cored wire, which have been tested and approved by Transnet Freight Rail (Rail Technology), shall be used (Annexure 4-2).

13.4.2 Central Office shall inform the Depots of the correct electrodes and flux-cored wire to be used, changes and new products that will be implemented.

13.5 WELDING REPAIRS DONE IN TRACK.

When welding is done in track, all welding repair work must be done under total track occupation. Subsequent grinding work can be done under normal occupations. The Maintenance Manager must decide whether it is economical to remove the crossing and perform the repairs in a workshop – taking into account the total occupation requirement.

13.5.1 PROTECTION OF TRAINS AND SAFEGUARDING OF PERSONNEL.

13.5.2 PROTECTION OF TRAINS.

13.5.2.1 Protection shall be afforded in accordance with Spoornet General Appendix No 6 (Part 1) when preventative grinding or welding repairs to rail-bound crossings are done in track.

13.5.3 FIRE PREVENTION.

13.5.3.1 Safety aspects regarding fire prevention shall be taken into account at all times (Chapter 2).

13.5.4 PREPARATION.

13.5.4.1 PREPARATION BY TRACK PERSONNEL.

13.5.4.1.1 Track Maintenance Personnel shall ensure that:

- The track is well drained.
- Sufficient clean ballast stone is available.
- Sufficient sleepers fastenings are loosened on both sides of the defect on the crossing.
- Horizontal and vertical alignment and track gauge of the turnout are corrected.
- All missing nuts and bolts are replaced.

13.5.4.1.2 At least five sleepers from the throat to trailing end of crossing shall be loosened by the track personnel for the purpose of lifting the crossing for the placement of spacers/wedges. This allows for sagging caused by heat induced by welding.

13.5.4.2 PREPARATION BY WELDING PERSONNEL.

13.5.4.2.1 Attend to Paragraph 13.3 before marking-off the crossing for welding.

13.5.4.2.2 Determining the area to be welded on the nose:

- Point P for the different types of monoblock crossings shall be determined as indicated in Annexure 13-1.
- Place a 1m straightedge on crown of crossing, with the one end at point P and the other towards the trailing end of crossing.
- Apply slight pressure on straightedge on the trailing side of the crossing. The point where light stops shining underneath the 1m straightedge indicates point C. This indicates where welding shall stop on the trailing side. The height difference between point P and the other end of the straightedge indicates the wheel damage and can be approximated by using a taper gauge at point P.

13.5.4.2.3 Determining the areas to be welded on the wings:

- Place the feeler gauge transversely on wings of the casting at point P.

- Place the one end of the straightedge on the feeler gauge with measurements obtained as per Paragraph 13.5.4.2.2, and the other end towards the throat of the casting.
- The point where light stops shining underneath the 1m straightedge, is point D, which indicates where welding shall stop on the facing side.

13.5.4.2.4 The crossing shall be lifted 25mm with a jack and a steel plate (150mm x 200mm x 25mm) shall be placed between the sleepers and the crossing base. This will prevent sagging.

13.5.5 GRINDING PRIOR TO WELDING.

13.5.5.1 All loose and work-hardened metal, as well as hairline cracks shall be removed using a MC2 grinding machine before welding work on a crossing commences.

13.5.5.2 Apply slight pressure during the grinding process to avoid over heating (metal turning blue) of the steel. Ensure that the grinding stones are not damaged or clogged with fine steel. Using damaged grinding stones could be fatal.

13.5.5.3 Remove overlaps.

13.5.5.4 Use dye penetrant to ensure all loose metal and hairline cracks are removed. Any sign of cracks, loose metal or porosity will be highlighted as red lines or dots through the white developer.

13.5.5.5 If the running surface is lowered more than 10mm to remove a defect, grinding shall be stopped to not impede on the safe passage of trains. The track personnel shall decide whether the track is safe for the passage of trains.

13.5.6 PREHEATING.

13.5.3.1 Preheating of the monoblock crossing is not permitted.

13.5.7 WELDING PROCEDURE.

13.5.7.1 Staggered method for welding of crossings.

13.5.7.1.1 Crossing may be welded by means of manual metal arc welding (MMAW) or flux-cored arc welding (FCAW).

13.5.7.1.2 The Staggered method is used whereby welding beads are welded at different places on the casting (Figure 13.1).

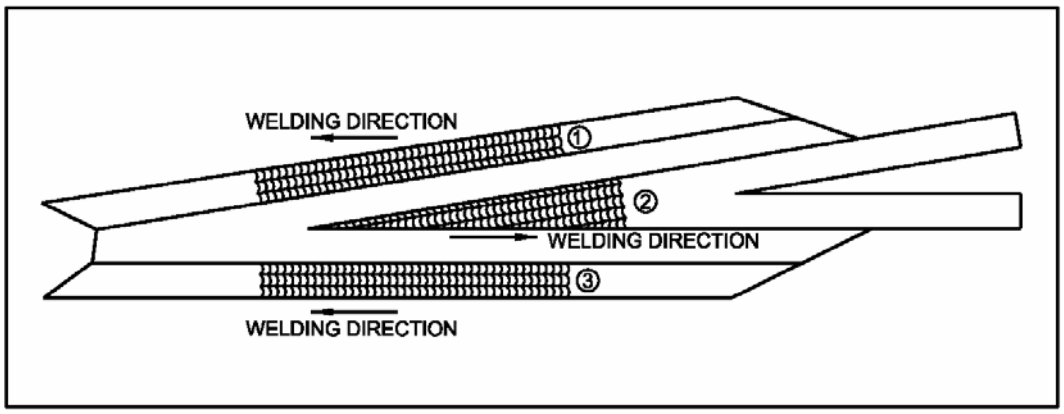

Figure 13.1. Staggered method.

13.5.7.1.3 The staggered method shall be applied until the damaged area is welded (built-up) more than 3mm above the required level. This will ensure a smooth and even running surface after final grinding (Annexure 13-2).

13.5.7.1.4 All slag and spatter shall be removed from the welding beads and crown after the welding process.

13.5.7.1.5 The welded area shall be peened with the ball end of a 1kg hammer to release any internal stresses.

13.5.7.1.6 The temperature of the casting may never rise above 200°C, as this will render carbide, which may cause hairline cracks and brake-outs in the casting.

13.5.7.1.7 Apply the record pad to the crossing.

13.5.8 ROUGH GRINDING.

13.5.8.1 The casting shall cool to ambient temperature before the steel spacer plate may be removed underneath the crossing and all the sleepers fastened and tamped, where after grinding may commence.

13.5.8.2 **NB: When grinding is done on crossing, wings should fit to nose and not nose to wings**.

13.5.8.3 Grinding shall commence with the nose of the casting. Place a 1m straightedge longitudinally in the centre of the nose with one end at point P, and the other towards the trailing end of the crossing. Ensure constant height between point P and point C by grinding. Grind a decline of 3mm from point P to the tip of the nose. It is recommended

that point P is left 1mm higher than normal crown wear for distance L towards the trailing end of nose, to allow for work-hardening of the welded metal.

13.5.8.4 Draw a line (with boilermaker's chalk or chalk-line) longitudinally on centre of the nose to sub-divide the nose into two equal halves.

13.5.8.5 Place the concave side of the 1:20 contour gauge on the nose and grind a 1:20 contour to both sides of the nose to match the running surface of the train wheels.

13.5.8.6 A sharp edge will be present on the centre of the nose once 1:20 cant has been achieved on both running surfaces.

13.5.8.7 Place the convex side of the 1:20 contour gauge, transversely at point P to determine the extent of metal to be removed on the wings. Grind proportionally away on left and right wings until contour gauge touches both wings and nose. This height shall be maintained over a distance of 600mm (between point E and the PI) for 1:12 turnouts, and 500mm (between point E and the PI) for 1:9 turnouts as indicated in blue (Annexure 13-1).

13.5.8.8 Grind an even decline on the wings from the PI towards point D as per Annexure 13-1.

13.5.9 FINAL GRINDING.

13.5.9.1 Grind a 13mm radius to gauge corners on wings and both sides of the nose.

13.5.9.2 The sharp edge on the centre of nose shall be removed to leave a sound surface.

13.5.9.3 Grinding shall match running surface of the rest of the casting.

13.5.9.4 Spray running surface of area repaired to observe rail wheel interaction.

13.5.9.5 No grooves, porosity, slag inclusion or undercuts may be present in the welded areas. If such defects do occur, the section in question shall be re-welded and re-grinded.

13.5.10 STANDARDS AND TOLERANCES.

13.5.10.1 Use dye penetrant to test for the presence of cracks after final grinding.

13.5.10.2 A 0.2mm feeler gauge may not enter underneath a 1m straightedge when placed longitudinally on the nose and wings of casting.

13.5.10.3 A decline of 3mm shall be present from point P to the tip of the nose.

13.5.10.4 A 1:20 inclination shall be present on the crown and the gauge corner shall have a radius of 13mm on the nose and wing surfaces of the monoblock crossing.

13.6 WELDING REPAIRS DONE IN A WORKSHOP.

13.6.1 INSPECTION.

13.6.1.1 The crossing shall be cleaned thoroughly by using a wire brush, needle scalar etc. Shot-blasting may be applied if available.

13.6.1.2 When a crossing is found suitable to be repaired in a workshop, it shall be placed on a workbench (jig) specifically made for the repair of monoblock crossings.

13.6.2 PREPARATION BY WELDING PERSONNEL.

13.6.2.1 The same procedure as described in Paragraph 13.5.4.2 shall be followed to prepare the crossing for welding in a workshop.

13.6.2.2 The crossing (placed on the workbench) shall be lifted and a spacer plate (thickness 50mm to 75mm depending on the depth and area to be welded) inserted underneath the nose, and the crossing shall be bent backwards to prevent it from sagging at the nose during the welding process.

13.6.3 GRINDING PRIOR TO WELDING.

13.6.3.1 The same process a described in Paragraph 13.5.5 shall be followed to grind the crossing prior to welding in a workshop.

13.6.4 PREHEATING.

13.6.4.1 Preheating of the monoblock crossing is not permitted.

13.6.5 WELDING PROCEDURE.

13.6.5.1 The same procedure as for welding of the crossing in track (Paragraph 13.5.7) shall be followed to repair the crossings in a workshop.

13.6.5.2 The crossing shall be left in the tensioned position until it has reached ambient temperature, where after the casting may be de-stressed.

13.6.6 ROUGH GRINDING.

13.6.6.1 Grinding after welding is the same procedure as in the case for repair of monoblock crossings in track, refer to Paragraph 13.5.8.

13.6.7 FINAL GRINDING.

13.6.7.1 Final grinding procedure is the same as in the case for repair of monoblock crossings in track, refer to Paragraph 13.5.9.

13.6.8 STANDARDS AND TOLERANCES.

13.6.8.1 See Paragraph 13.5.10.

CHAPTER 14 – REPAIRING RAIL-BOUND CROSSINGS.

14.1 GENERAL.

14.1.1 The metallurgical composition of the 14% manganese insert (Hatfield-steel), as well as the connecting rails, can adversely be changed by incorrect heat application. Special precautionary measures are therefore necessary when these components are welded.

14.1.2 Running surfaces of new casting inserts have already been machined and profiled correctly, and no grinding is permitted on the running surface of the machined casting wing and nose. Only preventative grinding is allowed (Chapter 6).

14.1.3 Only qualified artisan welders, who have successfully passed the relevant modules from the Advanced Track Welding course, may be used for this process.

14.2 DEFINITIONS AND METHODS OF MEASUREMENT.

14.2.1 POINT X.

14.2.1.1 Point X is a reference point measured 1309mm from point of intersection (PI) for 1:12 turnouts, and 980mm from PI for 1:9 turnouts, in the trailing direction.

14.2.2 POINTS H_1 AND H_2.

14.2.2.1 Points H_1 and H_2 are 25mm from the running side of the crown on both sides of the crossing nose in line with point X. These are the points where crown wear is measured using a depth gauge, or feeler gauge with a 1m straightedge.

14.2.3 CROWN WEAR H.

14.2.3.1 Crown wear H is the larger of the two measurements at points H_1 and H_2.

14.2.3.2 Negative crown wear H exists at point X on a new crossing (Nose is higher than rail-bound rails).

14.2.4 POINT P.

14.2.4.1 Point P is 180mm from the PI for 1:9 turnouts and 240mm from the PI for 1:12 turnouts, measured in the trailing direction on all rail-bound crossings (Annexures 14.1 and 14.2).

14.2.5 WHEEL DAMAGE.

14.2.6 The difference between crown wear H and crown wear at point P is the wheel damage.

14.2.7 AREA Q.

14.2.7.1 Area on the wings damaged by train wheels at the transfer area is defined as Q (mm^2).

14.2.8 AREA R.

14.2.8.1 Area on the nose and insert damaged by train wheels at the transfer area is defined as R (mm^2).

14.2.9 POINT E.

14.2.9.1 Point E is 450mm from the PI for 1:9 turnouts, and 580mm from the PI for 1:12 turnouts, in the trailing direction.

14.2.10 POINT D.

14.2.10.1 Point D indicates where welding on the wings will stop on the facing side.

14.2.10.2 Determining the location of point D will be further discussed in Paragraph 14.5.3.2.5.

14.2.11 POINT G.

14.2.11.1 Point G is 230mm from the PI for 1:9 turnouts, and 300mm from the PI for 1:12 turnouts, in the trailing direction.

14.2.12 DISTANCE L.

14.2.12.1 L is the distance between point P and point X on the nose. After welding, the section between point P and point X shall have constant height.

14.2.13 DISTANCE M.

14.2.13.1 M is the distance between point P and the tip of the nose.

14.2.14 POINT C.

14.2.14.1 Point C indicates the end of the welding area on the nose (trailing side).

14.2.15 RECORD PAD.

14.2.15.1 The record pad is brazed on the end of the right (when facing the trailing side) rail-bound rail.

14.2.15.2 Information that shall be recorded on the record pad include the welder code, date maintained, turnout number and G or W indicating whether grinding or welding was done.

14.3 INSPECTION, DECISION MAKING AND PLANNING.

14.3.1 The purpose of condition assessment and safety inspections is to determine in advance when, which and where repairs have to be done to a crossing.

14.3.2 Preventative grinding shall be done within the first month after new turnouts were installed in track, to prevent metal flow caused by the work hardening process. Preventative grinding shall be done in accordance with Chapter 6.

14.3.3 Maintenance personnel are responsible for visual inspection of rail-bound crossings, and the necessary corrective work shall be arranged if any abnormal wear or defects are present.

14.3.4 Condition assessment of rail-bound crossings shall be carried out at least once a year. The following measuring equipment applies:

- Feeler/Taper gauge, and two 1mm and two 2mm shims.
- Crossing contour gauge (Annexure 3-1).
- 1m straightedge.
- Depth gauge.

14.3.5 Condition assessment (wear measurement, description of cracks or any other defects, remarks and recommendations) shall be recorded on the appropriate track welding field sheet. The relevant work shall be prioritised as prescribed in Paragraph 13.3.7. The completed forms shall be forwarded to the Maintenance Manager for notification and decision-making.

14.3.6 All foreign matter shall be removed from a crossing for inspection purposes.

14.3.7 The following types of defects may be encountered at rail-bound crossings:

- Small vertical and horizontal cracks.
- Wheel damage to the nose and wings of the crossing.

- Visible casting defects.
- Metal breakouts at the nose and wings of crossings.
- Excessive overlaps.
- Sharp edges.
- Wheel-spin burns.

14.3.8 The following defects may result in a crossing being classified as been beyond repair:

- Excessive wheel damage and corrosion.
- Un-repairable and excessive casting defects.
- Horizontal and vertical cracks in boltholes.
- Horizontal and vertical cracks on the cast piece.
- Wear on the cast piece caused by train wheels.

14.4 ELECTRODES AND FLUX-CORED WIRE.

14.4.1 Only electrodes and flux-cored wire, which have been tested and approved by Spoornet Rail Technology, shall be used (Annexure 4-2).

14.4.2 Central Office shall inform the Depots of the correct electrodes and flux-cored wire to be used, changes and new products that will be implemented.

14.5 WELDING REPAIRS DONE IN TRACK.

14.5.1 PROTECTION OF TRAINS.

14.5.1.1 Protection shall be afforded in accordance with Spoornet General Appendix No 6 (Part 1) when preventative grinding or welding repairs to rail-bound crossings are done in track.

14.5.2 FIRE PREVENTION.

14.5.2.1 Safety aspects regarding fire prevention shall be taken into account at all times (Chapter 2).

14.5.3 PREPARATION.

14.5.3.1 PREPARATION BY TRACK PERSONNEL.

14.5.3.1.1 Track Maintenance Personnel shall ensure that:

- The track is well drained.

- Sufficient clean ballast stone is available.
- Sufficient sleepers fastenings are loosened on both sides of the defect on the crossing.
- Horizontal and vertical alignment and track gauge of the turnout are corrected.
- And that all missing nuts and bolts are replaced.

14.5.3.1.2 At least five sleepers from the throat to trailing end of crossing shall be loosened by the track personnel for the purpose of lifting the crossing for the placement of spacers/wedges. This allows for sagging caused by heat induced by welding.

14.5.3.2 PREPARATION BY WELDING PERSONNEL.

14.5.3.2.1 Remove all foreign matter, such as grease, oil, and rust.

14.5.3.2.2 Attend to Paragraph 14.3 before marking-off for welding.

14.5.3.2.3 Measure out the areas on the nose to be welded in accordance with Paragraph 14.2.

14.5.3.2.4 Determining the area to be welded on the nose:

- Point P for the different types of rail-bound crossings shall be determined as indicated in Annexures 14-1 and 14-2.
- Adjacent to point P, place the one end of the straightedge on the feeler gauge with measurements obtained as per Paragraph 14.2, and the other end towards the trailing end of the casting.
- The point where light stops shining underneath the 1m straightedge, is point C, which indicates where welding shall stop (indicated green and blue in Annexures 14-1 and 14-2).

14.5.3.2.5 Determining the areas to be welded on the wings:

- Place the feeler gauge transversely on wings of the casting at point P.
- Place the one end of the straightedge on the feeler gauge with measurements obtained as per Paragraph 14.2, and the other end towards the throat of the casting.
- The point where light stops shining underneath the 1m straightedge, is point D, which indicates where welding shall stop (Indicated green and blue in Annexures 14-1 and 14-2).

14.5.3.2.6 The crossing shall be lifted 25mm with a jack and a steel plate (150mm x 200mm x 25mm) shall be placed between the sleepers and the crossing base. This will prevent sagging.

14.5.4 GRINDING PRIOR TO WELDING.

14.5.4.1 All loose and work-hardened metal, as well as hairline cracks shall be removed using a MC2 grinding machine before welding work on a crossing commences.

14.5.4.2 Apply slight pressure during the grinding process to avoid over heating (metal turning blue) of the steel. Ensure that the grinding stones are not damaged or clogged with fine steel. Using damaged grinding stones could be fatal.

14.5.4.3 Remove overlaps.

14.5.4.4 Use dye penetrant to ensure all loose metal and hairline cracks are removed. Any sign of cracks, loose metal or porosity will be highlighted as red lines or dots through the white developer.

14.5.4.5 If the running surface is lowered more than 10mm to remove a defect, grinding shall be stopped to not impede on the safe passage of trains. The track personnel shall decide whether the track is safe for the passage of trains.

14.5.5 PREHEATING.

14.5.5.1 Preheating of the 14% MN area of the rail-bound crossing is not permitted.

14.5.6 WELDING PROCEDURE.

14.5.6.1 Staggered method for welding of crossings.

14.5.6.1.1 Crossing may be welded by means of manual metal arc welding (MMAW) or flux-cored arc welding (FCAW).

14.5.6.1.2 The Staggered method is used whereby welding beads are welded at different places on the casting.

14.5.6.1.3 The staggered method shall be applied until the damaged area is welded (built-up) more than 3mm above the required level. This will ensure a smooth and even running surface after final grinding (Annexure 13-2).

14.5.6.1.4 All slag and spatter shall be removed from the welding beads and crown after the welding process.

14.5.6.1.5 The welded area shall be peened with the ball end of a 1kg hammer to release any internal stresses.

14.5.6.1.6 The temperature of the casting may never rise above 200°C, as this will render carbide, which may cause hairline cracks and brake-outs in the casting.

14.5.6.1.7 Apply the record pad to the crossing.

14.5.7 ROUGH GRINDING.

14.5.7.1 The casting shall be allowed to cool down to ambient temperature before the steel spacer plate may be removed underneath the crossing and all the sleepers fastened and tamped, where after grinding may commence.

14.5.7.2 **NB: When grinding is done on crossing, wings should fit to nose and not nose to wings**.

14.5.7.3 Grinding shall commence with the nose of the casting. Place a 1m straightedge longitudinally in the centre of the nose with one end at point P, and the other towards the trailing end of the crossing. Ensure constant height between point P and point X by grinding. Grind a decline of 3mm from point P to the tip of the nose. It is recommended that point P is left 1mm higher than normal crown wear H for distance L towards the trailing end of nose, to allow for work-hardening of the welded metal.

14.5.7.4 Draw a line (with boilermaker's chalk or chalk-line) longitudinally on the centre of the nose to sub-divide the nose into two equal halves.

14.5.7.5 Place the concave side of the 1:20 contour gauge on the nose and grind a 1:20 contour to both sides of the nose to match the running surface of the train wheels.

14.5.7.6 A sharp edge will be present on the centre of the nose once 1:20 cant has been achieved on both running surfaces.

14.5.7.7 Place the convex side of the 1:20 contour gauge, transversely at point P to determine the extent of metal to be removed on the wings. Grind proportionally away on left and right wings until contour gauge touches both wings and nose. This height shall be maintained over a distance of 300mm (between point G and the PI) for 1:12 turnouts, and 230mm (between point G and the PI) for 1:9 turnouts as indicated in blue (Annexures 14-1 and

14.2). To assist grinding measurements, a 500mm straight edge can be used between point G and the PI.

14.5.7.8 Grind an even decline on the wings from the PI towards point D as per Annexures 14-1 and 14.2.

14.5.7.9 Note that the casting is 1mm lower than the connecting rails at Section A-A in Annexures 14-1 and 14-2.

14.5.7.10 Grind an even decline on the wings from point G towards point E.

14.5.8 FINAL GRINDING.

14.5.8.1 Grind a 13mm radius to gauge corners on wings and both sides of the nose.

14.5.8.2 Sharp edge on the centre of nose shall be removed to leave a sound surface.

14.5.8.3 Grinding shall match running surface of the rest of the casting.

14.5.8.4 Spray running surface of area repaired to observe rail wheel interaction.

14.5.8.5 No grooves, porosity, slag inclusion or undercuts may be present in the welded areas. If such defects do occur, the section in question shall be re-welded and re-grinded.

14.5.9 STANDARDS AND TOLERANCES.

14.5.9.1 Use dye penetrant to test for the presence of cracks after final grinding.

14.5.9.2 A 0.2mm feeler gauge may not enter underneath a 1m straightedge when placed longitudinally on the nose and wings of the casting.

14.5.9.3 A decline of 3mm shall be present from point P to the tip of the nose.

14.5.9.4 A 1:20 inclination shall be present on the crown and the gauge corner shall have a radius of 13mm on the nose and wing surfaces of the rail-bound crossing.

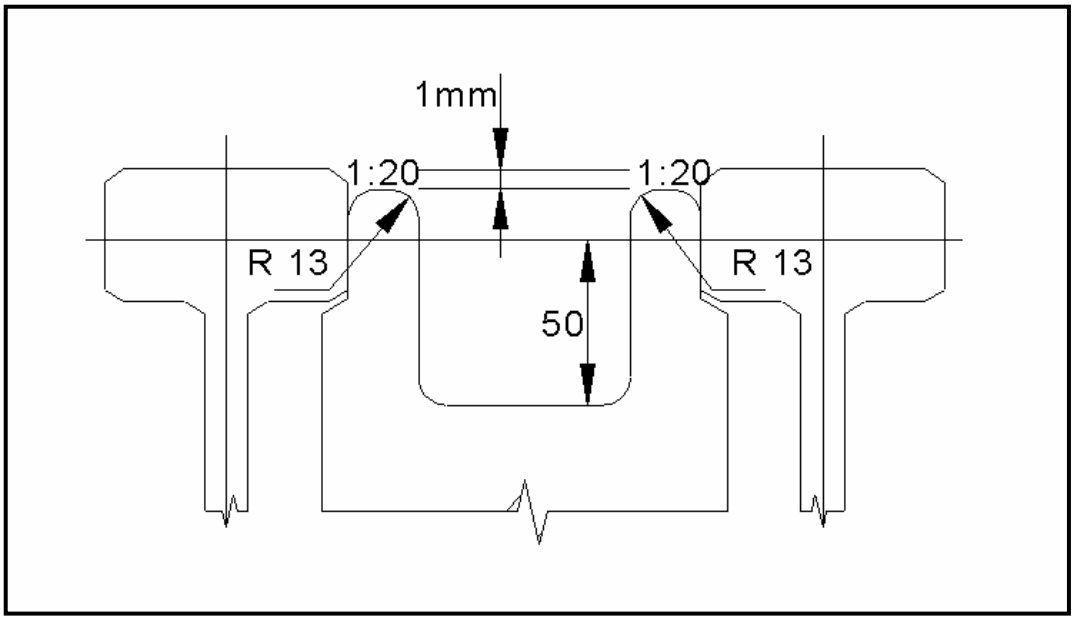

Figure 14.1. Facing Direction.

14.6 WELDING REPAIRS DONE IN A WORKSHOP.

14.6.1 INSPECTION.

14.6.1.1 The crossing shall be cleaned thoroughly by using a wire brush, needle scalar etc. Shot-blasting may be applied if available.

14.6.1.2 When a crossing is found suitable to be repaired in a workshop, it shall be placed on a workbench (jig) specifically made for the repair of rail-bound crossings.

14.6.2 PREPARATION BY WELDING PERSONNEL.

14.6.2.1 The same procedure as described in Paragraph 14.5.3 shall be followed to prepare the crossing for welding in a workshop.

14.6.2.2 The crossing (placed on the workbench) shall be lifted and a spacer plate (thickness 50mm to 75mm depending on the depth and area to be welded) inserted underneath the nose, and the crossing shall be bent backwards to prevent it from sagging at the nose during the welding process.

14.6.3 GRINDING PRIOR TO WELDING.

14.6.3.1 The same process as described in Paragraph 14.5.4 shall be followed to grind the crossing prior to welding in a workshop.

14.6.3.2 Welding repairs done on connecting rails:

- Casting insert shall be dismantled from connecting rails.
- The connecting rail is placed in a jig to eliminate any distortion (Annexure 14-3).
- Repair defects in accordance with Chapter 7 (Wheel-spin burns).

14.6.4 PREHEATING.

14.6.4.1 Preheating on turnout inserts is not permitted.

14.6.4.2 Follow pre- and post heating processes as prescribed in Chapter 5.

14.6.5 WELDING PROCEDURE.

14.6.5.1 The same procedure as for welding of the crossing in track (Paragraph 14.5.6) shall be followed to repair the crossings in a workshop.

14.6.5.2 The crossing shall be left in the tensioned position until it has reached ambient temperature, where after the casting may be de-stressed.

14.6.6 ROUGH GRINDING.

14.6.6.1 Grinding after welding is the same procedure as in the case for repair of rail-bound crossings in track, refer to Paragraph 14.5.7.

14.6.7 FINAL GRINDING.

14.6.7.1 Final grinding procedure is the same as in the case for repair of rail-bound crossings in track, refer to Paragraph 14.5.8.

14.6.8 STANDARDS AND TOLERANCES.

14.6.8.1 See Paragraph 14.5.9.

TRANSNET

delivering freight reliably freight rail

RAIL NETWORK INFRASTRUCTURE PROCEDURE

WRITTEN SAFE WORKING PROCEDURES FOR PERMANENT WAY WELDING

Author:	Engineer Rail Network Technical Office	Thulani Sitimela	
Approved:	Principal Engineer Rail Network Technical Office	Siboniso Vilakazi	Pr.Eng
Authorised:	Chief Engineer Rail Network Technical Office	Johan van Aardt	Pr.Eng

Date: 01-Nov-18

Circulation Restricted To: Transnet Freight Rail

© This document as a whole is protected by copyright. The information herein is the sole property of Transnet SOC Ltd. It may not be used, disclosed or reproduced in part or in whole in any manner whatsoever, except with the written permission of and in a manner permitted by the proprietors.

LIST OF WRITTEN SAFE WORK PROCEDURES (WSWP's) DRAWN UP BY THE WELDING SECTION OF INFRASTRUCTURE

SMS/WP/TW/…..

	Written Safe Work Procedure for…	WSWP No.	Project Wise no.	New	Approved
1	Exothermic welding	002	BBF3963		
2	Gas cutting of rails	003	BBF3964		x
3	Welding of Stock Rail	004	BBF3965		x
4	Welding of Switch blade	005	BBF3966		x
5	Welding of Frog - 14% Cast Manganese Rail Bound & Monoblock Crossing	006	BBF3967		x
6	Welding of Frog - Rail Manufactured Crossing	007	BBF3968		x
7	Welding of battered ends	008	BBF3969		x
8	Welding of chair lugs	009	BBF3970		x
9	Welding skid marks (wheel Spin Burn Marks)	010	BBF3971		x
10	Load and Off-load equipment with Block & Tackle	011	BBF3972		
11	Working with tail lift **(Saldanha)**	012	BBF3973	REMOVED	
12	Development of X-ray film	013	BBF3974		x
13	Operating Digital Radiography (X-Ray) Machines	014	BBH2275	x	

Circulation Restricted To: Transnet Freight Rail

© This document as a whole is protected by copyright. The information herein is the sole property of Transnet SOC Ltd. It may not be used, disclosed or reproduced in part or in whole in any manner whatsoever, except with the written permission of and in a manner permitted by the proprietors.

Written Safe Work Procedures Workshop (Review) held on 04/06/18 to 03/08/18 at Isando and Esselen Park

Present			
Names	**Sap No**	**Occupation**	**Depot**
Sister Bonani	19857	Safety Manager	R.N Technical Office
Thulani Sitimela	130139	Engineer	R.N Technical Office
Tebogo Rooibatjie	29158	Perway Manager SoR	Esselen Park
Daniel Mthukwane	28842	Technical Superintendent	Kimberley
Malvyn Lewis	28498	Technical Superintendent	Saldahna
Adam Brand	29701	Track Welding Manager	R.N Technical Office
Christo Smith	24358	Technical Superintendent	Port Elizabeth
Josias Komane	30137	Technical Superintendent	Isando
Chris van Wyk	24201	Technical Superintendent	Ladysmith
Herman Waltman	24367	Technical Superintendent	Vereeniging
Vincent Buthelezi	108321	Technical Supervisor	Vereeniging
Fhatuwani Mukuvhi	38033	Technical Superintendent	Ermelo
Abel Tsoe	17248	S.T.O	Esselen Park
Refilwe Ndlela	41543	Track Welding Manager (NDT)	R.N Technical Office
Christina Malaka	38612	S.T.O	Esselen Park

The above task team was invited to participate in the writing of these WSWP's due to their help with previous WSWP sessions and others for their technical expertise. These procedures are not intended to replace the existing technical instructions but are written to highlight the critical safety steps and the procedures to mitigate them. Please refer to the mentioned technical manuals for more detail.

Comments

The tasks highlighted or written in the bold font or format are the responsibilities of the the Track Master not the welder
Track Masters shall ensure that welding tasks allocated to them are completed as required by this document

WRITTEN SAFE WORKING PROCEDURES AND TASK OBSERVATION

BBF3963 VERSION 2

TASKS AND APPLICABLE SAFE WORKING PROCEDURES ASSOCIATED WITH:

EXOTHERMIC WELDING

For Rail Network Infrastructure -

PERWAY WELDING

WSWP No.	"SMS/WP/TW/002"
Risk No.	
Latest review date	
Aug-18	
Next review date	
Aug-20	

Task Observer: _____

SAP no: _____

Signature: _____

Observer Name: _____

Observer Grade: _____

SAP no: _____

Signature: _____

Date and location observation performed: _____

TRANSNET

delivering freight reliably freight rail

PPE

Safety Boots, Safety Gloves, Hearing Protection, Reflective Vest (except for personnel doing the welding but the rest of the team must wear it)
Barrier Cream, Spats, Apron, Bush hat, Safety Googles (welding), Safety googles (grinding)

Reason for performing the task observation

	Compliance with SMS requirements.		Follow-up on previous Task Observation.
	New Employee.		Other: Describe
	Injury on duty.		
	Identify possible new Risks.		

TASKS / OBSERVATION

Sequence/List of basic tasks	Hazards and/or Safety risks	Procedure	Competent Yes	Competent No	Measures taken: Instantaneous	Measures taken: Subsequent
Identify and Mitigate Risks / Hazards 1. This process shall not be carried out in the rain (moist or humid environment)/Track master must bring the track into the required standard before commencement of work/ 2. **Note**: No previously welded battered ends to be exothermic welded		Refer to Detailed Risk Analysis in TIMS register Work through HIRA Update Bow - Tie				
Identify and confirm Competencies 1. Must be in a possession of a PM 2.						
Wear PPE						
Pre- Task Activities		Start up safety meeting Complete DSTI (Identify, discuss, document all site specific hazards & who is present) Specific to this General Task				
1. Safety Talk/Tool box Talks	1. Injuries/Fatalities	SHEQ				
2. Obtain and in possession of PM/Job Card	2. Train delays/Derailments	According to instruction.				
3. Occupation and deploy protection (Track Master)	3. Damage of property/Collision	General Appendix No. 6 Part 1, Train Working Rules, Track Manual 2012.				
4. Check tools for serviceability (Working Condition)	4. Damage of Equipment/Injuries/Fatalities	General Appendix No. 6 Part 1, Train Working Rules, Track Manual 2012. Code 29				
Task Execution Activities		Specific to this General Task				
1. Track Master must ensure that track is brought to the prescribed standard for a minimum distance of 10m, 5m on both sides of the joint (loosen the fastenings and remove pads where applicable).	Misaligned joint, Sub-standard track, Damage to pads	Ensure Vertical- & Horizontal alignment, Track Maintenance Manual 2012.				
2. Track Master must tamp (lift and pack) the track before loosening the fastening system.	Uneven crown-wear / Wrong portion / Skew joint / Derailment	According to Track Welding Manual 2011 (BBB8341 Version 5), Chapter 11.				

3. Electrical continuity must be provided by Track Master, and notify OHTE dept.	Electrocution / Damage	Fit earth wire (jumper cables) properly.				
4. Welder identifies type (by roll marks), size of rails, measures crown-wear and rail temperature prior to commencement of weld	Material handling / Back strain / Uneven surfaces	Sufficient employees to unload / tool checklist 2.30				
5. Cutting of the gap to correct size (Track Master)	Burns / veld fires.	According to Track Welding Manual 2011 (BBB8341 Version 5), Chapter 2.				
6. Off load tools, material and equipment & place clear from track.	Damage / Injury	According to Track Welding Manual 2011 (BBB8341 Version 5), Chapter 2. PPE				
7. Place correct fire prevention equipment close to work area. (e.g. Fire extinguishers, -beaters, erect fire screens etc.)	Burns / veld fires.	Test with Liquid penetrant method. According to Track Welding Manual 2011/BBF3960 Version 2				
8. Clean rail ends with grinder (with triple twisted knotted cup brush/115mm grinding disc/hand brush).	Faulty joints (Rail breaks) / Burns / veld fires / Derailment	According to Track Welding Manual 2011 (BBB8341 Version 5), Chapter 2. PPE				
9. Preferably there should be no bolt holes (especially on long welded rails). If there are (e.g. branch lines), check and inspect joint-bolt holes for cracks.	veld fires / Burns / Cable damage / environment	According to Track Welding Manual 2011 (BBB8341 Version 5), Chapter 2. PPE . National Environmental management Act.				
10. Designate an area for waste material. Not in an Ash bank, where the slag can cool off safely (Where applicable) (Not Single-use crucible)	Environment/Injury/veld Fire/Burns	According to Track Welding Manual 2011 (BBB8341 Version 5), Chapter 2.				
11. Alignment of rail ends.	Rail break / Derailment / Poor Joint	According to Track Welding Manual 2011 (BBB8341 Version 5), Chapter 2.				
12. Record rail temperature and document. (Before casting the joint)	Rail break / Derailment / Poor Joint	According to Track Welding Manual 2011 (BBB8341 Version 5), Chapter 2.				
13. Fit correct molds (e.g. step molds/Junction molds if necessary) vertically and Centre over the gap with clamp.Lutting of the joint with sealing sand (no gloves during this step).Place cover plates over rail and slag trays.	faulty joints / rail breaks	According to Track Welding Manual 2011 (BBB8341 Version 5), Chapter 2.				
14. Fit the heating torch centrally over joint gap.	Faulty joints / Damage / Rail break	According to Track Welding Manual 2011 (BBB8341 Version 5), Chapter 2.				
15. Remove torch and holder as a unit (gas preheating), ignite the torch with a tripple flint lighter (Not Butane/Matches) and set flame correctly. (see WSWP's for petrol preheating process)	Faulty joints / Damage / Rail break/Injury	According to Track Welding Manual 2011 (BBB8341 Version 5), Chapter 11.				
16. Load single use crucible with thermit portion. Shake bag and sift through the fingers. Record portion number.	Faulty joints / Damage / Burns / Rail break	According to Track Welding Manual 2011 (BBB8341 Version 5), Chapter 11.				
17.Place torch back in position and secure. Place pouring block in position on top of moulds for heating up.	Burns/Injury	According to Track Welding Manual 2011 (BBB8341 Version 5), Chapter 11.				
18. Pre-heat the joint to the required temperature.	Faulty joints / Damage / Rail break / Burns	According to Track Welding Manual 2011 (BBB8341 Version 5), Chapter 11.				
19. Remove torch and place tap pouring block in position.	Faulty joints / Damage / Burns.	According to Track Welding Manual 2011 (BBB8341 Version 5), Chapter 11.				
20. Reposition single use crucible and ignite portion with an starlight. Place SUC cover in position.	Sparks: veld fires / Burns.	According to Track Welding Manual 2011 (BBB8341 Version 5), Chapter 11.				
21. Remove single use crucible and slag trays.	Burn/Injuries/Damage/veld fires	According to Track Welding Manual 2011 (BBB8341 Version 5), Chapter 11.				
22. Commence the cool down procedure. (Record rail temperature and document).	Burns / veld fires.	According to Track Welding Manual 2011 (BBB8341 Version 5), Chapter 11.				
23. Remove clamps and mould shoes.	Burns / veld fires.	According to Track Welding Manual 2011 (BBB8341 Version 5), Chapter 11.				
24. Shearing of joint, remove excess waste, place in designated safe area.	Burns / veld fires / Derailment.	According to Track Welding Manual 2011 (BBB8341 Version 5), Chapter 11. WSWP for Shearing machine.				

25. In the case of CrMn rail: Cover with thermal blanket for 30 mins.	Derailment / Rail breaks	According to Track Welding Manual 2011 (BBB8341 Version 5), Chapter 11.				
26. Rough grind within tollerances.Trains not allowed to pass over joint until it is cooled down to 300 degree celcius	Burns / veld fires / Noise induced hearing loss / Derailment.	According to Track Welding Manual 2011 (BBB8341 Version 5), Chapter 11. PPE				
Post-Task Activities		Specific to this General Task House Keeping				
1. Final grinding after cooling to environmental temperature. Clean joint.	Burns/veld fires/Injury	According to Track Welding Manual 2011 (BBB8341 Version 5), Chapter 11. PPE				
2. Stencil on field-side of rail-head	Injury/Burn	According to Track Welding Manual 2011 (BBB8341 Version 5), Chapter 11.				
3. Ensure Track Master secures joints with joggle plates (all lines Heavy haul, GFB, etc) until x-rayed and final report received from lab. Trackmaster must also fasten the fastenings	Derailment / Rail break	According to Track Welding Manual 2011 (BBB8341 Version 5), Chapter 11.				
4. Track Master must tamp (lift and pack) the track after the welding process is complete.	Injury/Derailment/Railbreaks/ Slacks	According to Track Welding Manual 2011 (BBB8341 Version 5), Chapter 11.				
5. Welder must remove equipment from track and load onto vehicle. Including waste materials e.g. boxes, slag, debris	Material handling / Back strain / Uneven surfaces	Sufficient employees to load.				
6.Trackmaster withdraw protection and cancel occupation (flagmen to stay off track while returning to team). Inform Train control	Train delays	General Appendix No. 6 Part 1.				
6. Complete necessary documentation. (Field-sheet, CPMs,SAP01s eg for call-outs)	Loss of Track-data / Derailment	According to Track Welding Manual 2011 (BBB8341 Version 5), Chapter 11.				

Remarks

Observation done on task/s number:	
Management intervention: Corrective actions taken/required to close the identified gap in the competency: (Eg. First aid training/kit, Equipment specific training, Exposure, C-green certification, Safety induction, etc)	
Follow up date:	
Task observation report to be distributed to the Line Manager Date:	

Line Manager

Date

WRITTEN SAFE WORKING PROCEDURES AND TASK OBSERVATION

BBF 3964 VERSION 2

TASKS AND APPLICABLE SAFE WORKING PROCEDURES ASSOCIATED WITH:	WSWP No.	"SMS/WP/RRV/TW/003."	**Task Observer:**
	Risk No.		**SAP no:**
CUTTING OF RAILS USING GAS	Latest review date		**Signature:**
	Aug-18		**Observer Name:**
	Next review date		**Observer Grade:**
For Rail Network Infrastructure -	**Aug-20**		**SAP no:**
PERWAY WELDING			**Signature:**
PPE			**Date and location observation performed:**

Safety Boots, Safety Gloves, Hearing Protection, Reflective Vest (except for personnel doing the cutting) Barrier Cream, Spats, Apron, Bush hat, Safety Googles (welding), Safety googles (grinding)

Reason for performing the task observation

	Compliance with SMS requirements.		Follow-up on previous Task Observation.
	New Employee.		Other: Describe
	Injury on duty.		
	Identify possible new Risks.		

TASKS		**OBSERVATION**				
Sequence/List of basic tasks	**Hazards and/or Safety risks**	**Procedure**	**Competent**		**Measures taken**	
			Yes	No	Instantaneous	Subsequent
Identify and Mitigate Risks / Hazards **Note:** When cutting a rail that is under tension (kick out on track or at derailments), ensure that you first evaluate the situation to establish where the least tension exists, and make initial cut there. **This process shall not be carried out in the rain (moist or humid environment)**	Fatality due to whiplash caused by rail under tension. Body injuries, Veld fire,	Refer to Detailed Risk Analysis in TIMS register Work through HIRA Update Bow - Tie Look out for dry vegetation, and flammable material as per According to Track Welding Manual 2011 (BBB8341 Version 5) Determination of fire risk form 3.03/BBF3960 VERSION 2				
Identify and confirm Competencies 1. Code C Driver's + P.r.P.D License 2. Cat. C Green - AHSI 3. Emergency Certificate Basic Fire Fighting Training First Aid Certificate 4. Train Working Rules Certificate 5. Trade Hand L4/Welder Artisan Certificate Trained, assessed, certified competent to perform gas cutting 6. Vehicle Trip Authority Form_090702	Electrocution / Fatality Burn Damage Accident Damage to property Damage to property Body injuries	"CF Legislative requirments"Transnet Policies applicable License / Certification / Training specifics SoR Public Road Act/ License Train Working Rules/Transnet Policies Applicable Training specifics SoR Oxygen Liquid petroleum Gas Cutting Training				
Wear PPE	Body injuries/Fatality/Burn	Check that all PPE stipulated for this "General Task"				
Pre- Task Activities 1. Safety Talk/Tool box Talks, 2. Prevention of veld fires 3. Be in possession of PM/Job Card 4. Visually Inspect all gas-cutting equipment for serviceability. (Perished/Damage hoses, regulators, Clips on hoses etc.). 5. Handling, and transportation of gas cylinders. Secure cylinders according to applicable safety instructions (Do not exceed the factor of 1000).	Body injuries , Burn, Fatality Equipment damage Damage to neighboring land/property/injury to personnel Train Delays Leakages / Damage / Explosion leading to fatality Heavy material leading to body injuries Cylinder explosion	Start up safety meeting 1. Complete DSTI/ Site Specific Safety talk (Identify, discuss, document all site specific hazards & who is present) Complete Bow Tie Specific to this General Task 2. Determination of fire risk form 3.03/BBF3960 VERSION 2, 3. According to instruction, planning office 4. According to Track Welding Manual 2011 (BBB8341 Version 5) 5.Specific to this General Task According to Track Welding Manual 2011 (BBB8341 Version 5), Chapter 2:7 Safety Guideline. Act on Transport of Hazardous Material.				

Task Execution Activities 1. Handling, moving (Push Trolley) and placing of gas cylinders. Secure cylinders according to applicable safety instructions (Do not exceed the factor of 1000) 2. Off loading of fire fighting equipment and have usable fire extinguishers ready in case of emergency. Place Fire fighting equipment at identified locations 3. Connect the Regulator, Hoses, Flash-back arrestors (both ends of hoses), Cutting attachments etc. 4. Open gas cylinders and check for leaks using leak detection fluid. 5. Set gauges for required pressure. 6.Measure and mark lengths to be cut (ensure that the rail is secured - possible movement or tipping over). 7. Determine if rail is under Stress/compression and use prescribed cutting method 8. Ignite the cutting torch with triple flint lighter (Not with Butane lighter) & set the flame. 9. Cut the rails. (ensure that the rail is secured - possible movement or tipping over).	Body injuries Cylinder explosion Fatality Burns Heavy material, resulting to body Injuries Veld fires Waste material Trip and fall due to uneven surfaces	1 to 9. According to Track Welding Manual 2011 (BBB8341 Version 5). Leak detection fluid. 2. Determination of fire risk form 3.03 Specific to this General Task According to Track Welding Manual 2011 (BBB8341 Version 5), Chapter 2:7 Safety Guideline. Act on Transport of Hazardous Material.				
Post-Task Activities 1. Shut off torch in correct sequence (Acetylene / LP Gas first, then oxygen). Ensure cylinders are properly closed. 2. Close the gas cylinder valves and release pressure by opening the torch before disassembling the cutting equipment. 3. Reset your regulators to zero 4. Handling, and transportation of gas cylinders. Secure cylinders according to applicable safety instructions (Do not exceed the factor of 1000). 5. Clear the site and complete necessary documents.	Damage to equipment, Cylinder explosion, Flash backs, Body injuries Heavy material leading to Injuries Cylinder explode Housekeeping	1 to 3. Specific to this General Task According to Track Welding Manual 2011 (BBB8341 Version 5), Chapter 2:7 Safety Guideline. 4. Act on Transport of Hazardous Material. 5. House Keeping, Remove scrap / material (where necessary). Waste material / Uneven surfaces / Injury (hand & foot)				
Remarks						
Observation done on task/s number:						
Management intervention: Corrective actions taken/required to close the identified gap in the competency: (E.g.. First aid training/kit, Equipment specific training, Exposure, C-green certification, Safety induction, etc.)						
Follow up date:						
Task observation report to be distributed to the Line Manager Date:						

Line Manager

Date

WRITTEN SAFE WORKING PROCEDURES AND TASK OBSERVATION

BBF 3965 VERSION 2

TASKS AND APPLICABLE SAFE WORKING PROCEDURES ASSOCIATED WITH:

WELDING OF STOCK RAIL

For Rail Network Infrastructure -

PERWAY WELDING

WSWP No.	"SMS/WP/TS/004"
Risk No.	
Latest review date	
Aug-18	
Next review date	
Aug-20	

Task Observer: _____

SAP no: _____

Signature: _____

Observer Name: _____

Observer Grade: _____

SAP no: _____

Signature: _____

Date and location observation performed: _____

TRANSNET

delivering freight reliably freight rail

PPE

Safety Boots, Safety Gloves, Hearing Protection, Reflective Vest (except for personnel doing the welding but the rest of the team must wear it) Barrier Cream, Spats, Apron, Bush hat, Safety Googles (welding), Safety googles (grinding)

Reason for performing the task observation

	Compliance with SMS requirements.		Follow-up on previous Task Observation.
	New Employee.		Other: Describe
	Injury on duty.		
	Identify possible new Risks.		

TASKS

OBSERVATION

Sequence/List of basic tasks	Hazards and/or Safety risks	Procedure	Competent		Measures taken	
			Yes	No	Instantaneous	Subsequent
Identify and Mitigate Risks / Hazards **This process shall not be carried out in the rain (moist or humid environment)/Track master must bring the frog into the required standard before commencement of work**		Refer to Detailed Risk Analysis in TIMS register Work through HIRA Update Bow - Tie				
Identify and confirm Competencies 1. Must be in possession of PM & Occupation.		"CF Legislative requirements" Transnet Policies applicable License / Certification / Training specifics				
Wear PPE		Check that all PPE stipulated for this "General Task" is Issued, in Good condition, Worn correctly				
Pre- Task Activities		Start up safety meeting Complete DSTI (Identify, discuss, document all site				
1. Safety Talk/Tool box Talks						
2. Must be in possession of PM & Occupation.	Train delays	According to instruction, Planning Office or War Room				
3. Off load tools & place material and equipment free from track.	Material handling / Back strain / Uneven surfaces	According to Track Welding Manual 2011 (BBB8341 Version 5), Determination of fire risk form 3.03				
4. Erect signage at work area. (Where applicable in urban areas)	Injury to public (ultra violet rays)	Inform public/other personnel by use of warning sign/s.				
5. Welder to check tools for serviceability: - e.g. Welding Plant. - Test earth leakage protector. - Check insulation on welding cables. - Connect earth cable to appropriate rail-line when welding. - Check earth-clamp. - Check oil, water & fuel.	Injury / Electrocution / Damage.	According to Track Welding Manual 2011 (BBB8341 Version5), CODE 29 checklist				
6. Place correct fire prevention equipment close to work area. (e.g. Fire extinguishers, -beaters) and erect fire screens etc.	Burns / veld fires.	According to Track Welding Manual 2011 (BBB8341 Version 5), Determination of fire risk form 3.03				
Task Execution Activities		Specific to this General Task				
1. Ensure that protection is deployed where applicable. (Person in charge)	Injury / Damage.	According to general appendix no. 6 Part 1, section 11.				

2. Pre-heat electrodes	Faulty welding (moisture) / Damage / Burns	According to Track Welding Manual 2011 (BBB8341 Version 5),				
3. Identify types of rails (by roll marks). Loosen enough fastenings both sides.	Injury / Damage / Derailment	According to Track Welding Manual 2011 (BBB8341 Version 5),				
4. Mark damaged area, remove loose metal (by grinding) and test for cracks (Liquid penetrant method).	Breakouts on welding / Sparks / Burns / Fire / Noise / Derailment	According to Track Welding Manual 2011 (BBB8341 Version 5), BBF3960 VERSION 2				
5. Connect the welding earth-cable to the correct leg of rail.	Damage to track & signals.	According to Track Welding Manual 2011 (BBB8341 Version 5),				
6. CrMn rail: Place wood block with steel plate beneath rail. Place isolating plate between rail and steel plate.	Sagging of rail / Damage / Injury.	According to Track Welding Manual 2011 (BBB8341 Version 5),				
7. Pre-heat rail to correct temperature for that specific type of rail.	Sagging of rail / Damage / Injury.	According to Track Welding Manual 2011 (BBB8341 Version 5),				
8. Where applicable ensure that an Infra Worker (Tap-man) is available to warn the Welder of any on-coming trains.	Damage / Injury	General Appendix No. 6 Part 1.				
9. Commence with welding process according to specifications.	Arc-eyes / Burns / Damage / Derailment	According to Track Welding Manual 2011 (BBB8341 Version 5),				
10. CrMn rail: Cover with thermal blanket (30min.) after completion of weld.	Rail breaks / Derailment	According to Track Welding Manual 2011 (BBB8341 Version 5),				
11. Rough-grind within tolerances.	Burns / veld fires / Noise induced hearing loss / Derailment.	According to Track Welding Manual 2011 (BBB8341 Version 5),/BBF3960 VERSION 2				
Post-Task Activities		Specific to this General Task House Keeping				
1. Replace pads if necessary and fasten fastenings (Track master)	Derailment / Rail breaks	According to Track Welding Manual 2011 (BBB8341 Version 5),				
2 . Final grinding after cooling to ambient temperature.	Burns / veld fires.	According to Track Welding Manual 2011 (BBB8341 Version 5),/ BBF3960 VERSION 2				
3. Stencil on field-side of rail-head.	Injury	According to Track Welding Manual 2011 (BBB8341 Version 5),				
4. Remove & load machinery, equipment, material. Ensure that site is left in a clean state.	Material handling / Back strain / Uneven surfaces	Sufficient employees to load. Environmental				
5. Person in charge withdraw protection and cancel occupation (flagmen to stay off track while returning to team). Inform Train control.	Injury / fatality / Train delays	General Appendix No. 6 Part 1.				
6. Complete necessary documentation. (Field-sheet)	Loss of Track-data / Derailment	According to Track Welding Manual 2011 (BBB8341 Version 5),				

Remarks

Observation done on task/s number:	
Management intervention: Corrective actions taken/required to close the identified gap in the competency: (E.g.. First aid training/kit, Equipment specific training, Exposure, C-green certification, Safety induction, etc.)	
Follow up date:	
Task observation report to be distributed to the Line Manager Date:	

Line Manager

Date

WRITTEN SAFE WORKING PROCEDURES AND TASK OBSERVATION

BBF3966 VERSION 2

TASKS AND APPLICABLE SAFE WORKING PROCEDURES ASSOCIATED WITH:

WELDING OF SWITCH BLADE

For Rail Network Infrastructure -

PERWAY WELDING

WSWP No.	**"SMS/WP/TS/005"**
Risk No.	
Latest review date	
Aug-18	
Next review date	
Aug-20	

Task Observer: _____

SAP no: _____

Signature: _____

Observer Name: _____

Observer Grade: _____

SAP no: _____

Signature: _____

Date and location observation performed: _____

TRANSNET

delivering freight reliably freight rail

PPE

Safety Boots, Safety Gloves, Hearing Protection, Reflective Vest (except for personnel doing the welding but the rest of the team must wear it) Barrier Cream, Spats, Apron, Bush hat, Safety Googles (welding), Safety googles (grinding)

Reason for performing the task observation

	Compliance with SMS requirements.		Follow-up on previous Task Observation.
	New Employee.		Other: Describe
	Injury on duty.		
	Identify possible new Risks.		

TASKS		OBSERVATION				
Sequence/List of basic tasks	**Hazards and/or Safety risks**	**Procedure**	**Competent**		**Measures taken**	
			Yes	No	Instantaneous	Subsequent
Identify and Mitigate Risks / Hazards **No welding work must be performed on Mainline switch blades or when blade wear is beyond repair conditions. Only qualified and competent person certified by accredited official must PERFORMED THE TASK/This process shall not be carried out in the rain (moist or humid environment)/Track master must bring the Line into the required standard before commencement of work**	Derailment/Injuries/ Damage of property.	Refer to Detailed Risk Analysis in TIMS register Work through HIRA Update Bow - Tie				
Identify and confirm Competencies 1. Must be in possession of PM & Total Occupation.	Train delays	"CF Legislative requirements" Transnet Policies applicable License / Certification / Training specifics				
Wear PPE		Check that all PPE stipulated for this "General Task" is Issued, in Good condition, Worn correctly				
Pre- Task Activities		Start up safety meeting Complete DSTI (Identify, discuss, document all site specific hazards & who is present) Specific to this General Task				
1. Safety Talk/Tool box Talks		According to instruction, planning office				
2. Erect signage at work area. (Where applicable in urban areas)	Injury to public (ultra violet rays)	Inform public/other personnel by use of warning sign/s.				
3. Off load tools & place material and equipment free from track.	Material handling / Back strain / Uneven surfaces	Sufficient employees to unload.				
4. Welder to check tools for serviceability: - e.g. Welding Plant. - Test earth leakage protector. - Check insulation on welding cables. - Check earth-clamp. - Check oil, water & fuel.	Injury / Electrocution / Damage.	According to Track Welding Manual 2011 (BBB8341 Version5), CODE 29 checklist				
5. Place correct fire prevention equipment close to work area. (e.g. Fire extinguishers, -beaters) and erect fire screens etc.	Burns / veld fires.	According to Track Welding Manual 2011 (BBB8341 Version 5), Determination of fire risk form 3.03				

6. Ensure that protection is deployed. (Person in charge)	Injury / Damage.	According to general appendix no. 6 part 1, section 11.				
Task Execution activities		Specific to this General Task				
1. Pre-heat electrodes.	Faulty welding (moisture) / Damage / Burns	According to Track Welding Manual 2011(BBB8341 Version 5)/BBF3960 version 2				
2. Ensure that protection is deployed. (Person in charge)	Injury / Damage.	General Appendix No. 6 Part 1.				
2. Identify types of rails (according to roll marks) for correct preheating and type of electrodes.	Injury / Damage / Derailment	According to Track Welding Manual 2011(BBB8341 Version 5),.				
3. Mark damaged area, remove all previously welded and loose metal (by grinding) and test for cracks (Liquid penetrant method).	Breakouts on welding / Sparks / Burns / Fire / Noise / Derailment	According to Track Welding Manual 2011(BBB8341 Version 5)/ BBF3960 version 2				
4. Connect the welding earth-cable to the Switch-blade.	Damage to track & signals.	According to Track Welding Manual 2011(BBB8341 Version 5)				
5. Pre-heat rail to correct temperature for that specific type of rail.	Sagging of rail / Damage / Injury.	According to Track Welding Manual 2011(BBB8341 Version 5)				
6. Where applicable ensure that an Infra Worker (Tap-man) is available to warn the Welder of any on-coming dangers.	Damage / Injury	According to Track Welding Manual 2011(BBB8341 Version 5),.				
7. Commence with welding process according to specifications.	Arc-eyes / Burns / Damage / Derailment	According to Track Welding Manual 2011(BBB8341 Version 5),.				
8. Rough-grind within tolerances.	Burns / veld fires / Noise induced hearing loss / Derailment.	According to Track Welding Manual 2011(BBB8341 Version 5)/ BBF3960 Version 2				
Post-Task Activities		Specific to this General Task House Keeping				
1. Final grinding after cooling to ambient temperature.	Burns / veld fires.	According to Track Welding Manual 2011(BBB8341				
2. Test welded area for cracks using liquid penetrant testing method.	Rail breaks / Derailments	According to Track Welding Manual 2011(BBB8341 Version 5),.				
3. Remove & load machinery, equipment and material, secure	Material handling / Back strain / Uneven surfaces	Sufficient employees to load. Housekeeping				
4. Person in charge withdraw protection and cancel occupation (flagmen to stay off track while returning to team). Inform Train control.	Injury / Train delays	General Appendix No. 6 Part 1.				
5. Complete necessary documentation. (Field-sheet)	Loss of Track-data / Derailment	According to Track Welding Manual 2011(BBB8341 Version 5),.				

Remarks

Observation done on task/s number:	
Management intervention: Corrective actions taken/required to close the identified gap in the competency: (E.g.. First aid training/kit, Equipment specific training, Exposure, C-green certification, Safety induction, etc.)	
Follow up date:	
Task observation report to be distributed to the Line Manager Date:	

Line Manager

Date

WRITTEN SAFE WORKING PROCEDURES AND TASK OBSERVATION

BBF 3967 VERSION 2

TASKS AND APPLICABLE SAFE WORKING PROCEDURES ASSOCIATED WITH:

WELDING OF FROGS - 14% CAST MANGANESE RAIL BOUND & MONOBLOCK CROSSING

For Rail Network Infrastructure -

PERWAY WELDING

WSWP No.	"SMS/WP/TS/006"
Risk No.	
Latest review date	
Aug-18	
Next review date	
Aug-20	

Task Observer: _____

SAP no: _____

Signature: _____

Observer Name: _____

Observer Grade: _____

SAP no: _____

Signature: _____

Date and location observation performed: _____

TRANSNET freight rail — delivering freight reliably

PPE

Safety Boots, Safety Gloves, Hearing Protection, Reflective Vest (except for personnel doing the welding but the rest of the team must wear it) Barrier Cream, Spats, Apron, Bush hat, Safety Googles (welding), Safety googles (grinding)

Reason for performing the task observation

	Compliance with SMS requirements.		Follow-up on previous Task Observation.
	New Employee.		Other: Describe
	Injury on duty.		
	Identify possible new Risks.		

TASKS		OBSERVATION				
			Competent		Measures taken	
Sequence/List of basic tasks	**Hazards and/or Safety risks**	**Procedure**	Yes	No	Instantaneous	Subsequent
Identify and Mitigate Risks / Hazards **Only qualified and competent person certified by accredited official must PERFORMED THE TASK. Track master must bring the frog into the required standard before commencement of work/This process shall not be carried out in the rain (moist or humid environment)**	Derailment/Injury/ Damage of property	Refer to Detailed Risk Analysis in TIMS register Work through HIRA Update Bow - Tie According to Track Manual Perway				
Identify and confirm Competencies 1. Must be in possession of PM & Occupation.		"CF Legislative requirements" Transnet Policies applicable License / Certification / Training specifics				
Wear PPE		Check that all PPE stipulated for this "General Task" is Issued, in Good condition, Worn correctly				
Pre- Task Activities		Start up safety meeting Complete DSTI (Identify, discuss, document all site specific hazards & who is present) Specific to this General Task				
1. Safety Talk/Tool box Talks	Train delays	According to instruction, planning office				
2. Erect signage at work area. (Where applicable in urban areas)	Injury to public (ultra violet rays)	Inform public/other personnel by use of warning sign/s.				
3. Off load tools & place material and equipment free from track.	Material handling / Back strain / Uneven surfaces	Sufficient employees to unload.				
4. Welder to check tools for serviceability: - e.g. Welding Plant. - Test earth leakage protector. - Check insulation on welding cables. - Check earth-clamp. - Check oil, water & fuel.	Injury / Electrocution / Damage.	According to Track Welding Manual 2011 (BBB8341 Version5), CODE 29 checklist				
5. Place correct fire prevention equipment close to work area. (e.g. Fire extinguishers, -beaters) and erect fire screens etc.	Burns / veld fires.	According to Track Welding Manual 2011 (BBB8341 Version 5), Determination of fire risk form 3.03				
Task Execution activities		Specific to this General Task				
1. Pre-heat electrodes.	Faulty welding (moisture) / Damage / Burns	According to Track Welding Manual 2011(BBB8341 Version 5),.				

2. Ensure that protection is deployed. (Person in charge)	Injury / Damage.	According to general appendix no. 6 part 1, section 11.				
3. Mark damaged area, remove all previously welded and loose metal (by grinding) and test for cracks using the Liquid penetrant method.	Breakouts on welding / Sparks / Burns / Fire / Noise / Derailment	According to Track Welding Manual 2011(BBB8341 Version 5),/ BBF 3960 Version 2				
4. Connect the welding earth-cable to the work piece.	Damage to track & signals.	According to Track Welding Manual 2011(BBB8341 Version 5),.				
5. Where applicable ensure that an Infra Worker (Tap-man) is available to warn the Welder of any on-coming dangers.	Damage / Injury	According to Track Welding Manual 2011(BBB8341 Version 5),.				
6. Commence with welding process according to specifications.	Arc-eyes / Burns / Damage / Derailment	According to Track Welding Manual 2011(BBB8341 Version 5),.				
7. Rough-grind within tolerances.	Burns / veld fires / Noise induced hearing loss / Derailment.	According to Track Welding Manual 2011(BBB8341 Version 5),.				
Post-Task Activities		Specific to this General Task House Keeping				
1. Final grinding after cooling to ambient temperature.	Burns / veld fires.	According to Track Welding Manual 2011(BBB8341 Version 5),.				
2. Test welded area for cracks using Liquid penetrant method.	Rail breaks / Derailments	According to Track Welding Manual 2011(BBB8341 Version 5),.				
3. Stencil on Brass pad (On steel plate on Mono blocks)	Injury	According to Track Welding Manual 2011(BBB8341 Version 5),.				
4. Remove & load machinery, equipment and material, secure	Material handling / Back strain / Uneven surfaces	Sufficient employees to load. Housekeeping				
5. Person in charge withdraw protection and cancel occupation (flagmen to stay off track while returning to team). Inform Train control.	Injury / Train delays	General Appendix No. 6 Part 1.				
6. Complete necessary documentation. (Field-sheet)	Loss of Track-data / Derailment	According to Track Welding Manual 2011(BBB8341 Version 5),.				

Remarks

Observation done on task/s number:	
Management intervention: Corrective actions taken/required to close the identified gap in the competency: (E.g.. First aid training/kit, Equipment specific training, Exposure, C-green certification, Safety induction, etc.)	
Follow up date:	
Task observation report to be distributed to the Line Manager Date:	

Line Manager

Date

WRITTEN SAFE WORKING PROCEDURES AND TASK OBSERVATION

BBF 3968 VERSION 2

TASKS AND APPLICABLE SAFE WORKING PROCEDURES ASSOCIATED WITH:

WELDING OF FROG (RAIL MANUFACTURED CROSSING)

For Rail Network Infrastructure -

PERWAY WELDING

WSWP No.	"SMS/WP/TS/007"
Risk No.	
Latest review date	
Aug-18	
Next review date	
Aug-20	

Task Observer: _____

SAP no: _____

Signature: _____

Observer Name: _____

Observer Grade: _____

SAP no: _____

Signature: _____

Date and location observation performed: _____

TRANSNET

delivering freight reliably freight rail

PPE

Safety Boots, Safety Gloves, Hearing Protection, Reflective Vest (except for personnel doing the welding but the rest of the team must wear it) Barrier Cream, Spats, Apron, Bush hat, Safety Googles (welding), Safety googles (grinding)

Reason for performing the task observation

	Compliance with SMS requirements.		Follow-up on previous Task Observation.
	New Employee.		Other: Describe
	Injury on duty.		
	Identify possible new Risks.		

TASKS

OBSERVATION

Sequence/List of basic tasks	Hazards and/or Safety risks	Procedure	Competent		Measures taken	
			Yes	No	Instantaneous	Subsequent
Identify and Mitigate Risks / Hazards **Only qualified and competent person certified by accredited official must PERFORMED THE TASK/This process shall not be carried out in the rain (moist or humid environment)/Track master must bring the frog into the required standard before commencement of work**		Refer to Detailed Risk Analysis in TIMS register Work through HIRA Update Bow - Tie				
Identify and confirm Competencies 1. Must be in possession of PM & Occupation.		"CF Legislative requirements" Transnet Policies applicable License / Certification / Training specifics				
Wear PPE		Check that all PPE stipulated for this "General Task" is Issued, in Good condition, Worn correctly				
Pre- Task Activities		Start up safety meeting Complete DSTI (Identify, discuss, document all site specific hazards & who is present) Specific to this General Task				
1. Safety Talk/Tool box Talks	Train delays	According to instruction, planning office				
2. Erect signage at work area. (Where applicable in urban areas)	Injury to public (ultra violet rays)	Inform public/other personnel by use of warning sign/s.				
3. Off load tools & place material and equipment free from track.	Material handling / Back strain / Uneven surfaces	Sufficient employees to unload.				
4. Welder to check tools for serviceability: - e.g. Welding Plant. - Test earth leakage protector. - Check insulation on welding cables. - Check earth-clamp. - Check oil, water & fuel.	Injury / Electrocution / Damage.	According to Track Welding Manual 2011 (BBB8341 Version5), CODE 29 checklist				
5. Place correct fire prevention equipment close to work area. (e.g. Fire extinguishers, -beaters) and erect fire screens etc.	Burns / veld fires.	According to Track Welding Manual 2011 (BBB8341 Version 5), Determination of fire risk form 3.03				
6. Ensure that protection is deployed. (Person in charge)	Injury / Damage.	According to general appendix no. 6 part 1, section 11.				
Task Execution activities		Specific to this General Task				

1. Pre-heat electrodes.	Faulty welding (moisture) / Damage / Burns	According to Track Welding Manual 2011(BBB8341 Version 5),.				
2. Identify types of rails (according to roll marks) for correct preheating and type of electrodes.	Injury / Damage / Derailment	According to Track Welding Manual 2011(BBB8341 Version 5),.				
3. Mark damaged area, remove all previously welded and loose metal (by grinding) and test for cracks (Liquid penetrant method).	Breakouts on welding / Sparks / Burns / Fire / Noise / Derailment	According to Track Welding Manual 2011(BBB8341 Version 5),BBF3960 Version 2				
4. Connect the welding earth-cable to the work piece.	Damage to track & signals.	According to Track Welding Manual 2011(BBB8341 Version 5),.				
5. Slack all crossing-bolts and fastenings (Track Master).	Damage/Injury	According to Track Welding Manual 2011(BBB8341 Version 5)/ Perway Track Manual				
6.Pre-heat applicable area of Frog.	Sagging of rail / Damage / Injury.	According to Track Welding Manual 2011(BBB8341 Version 5),.				
7. Where applicable ensure that an Infra Worker (Tap-man) is available to warn the Welder of any on-coming dangers.	Damage / Injury	According to Track Welding Manual 2011(BBB8341 Version 5),.				
8. Commence with welding process according to specifications.	Arc-eyes / Burns / Damage / Derailment	According to Track Welding Manual 2011(BBB8341 Version 5),.				
9. Rough-grind within tolerances.	Burns / veld fires / Noise induced hearing loss / Derailment.	According to Track Welding Manual 2011(BBB8341 Version 5),BBF3960 Version 2				
Post-Task Activities		Specific to this General Task House Keeping				
1. Tighten all crossing-bolts and fastenings (Track Master).	Damage / Injury (hands)	According to Track Welding Manual 2011(BBB8341 Version 5),Perway Track Manual				
2. Final grinding after cooling to ambient temperature.	Burns / veld fires.	According to Track Welding Manual 2011(BBB8341 Version 5), BBF3960 Version 2				
3. Test welded area for cracks using Liquid penetrant method.	Rail breaks / Derailments	According to Track Welding Manual 2011(BBB8341 Version 5),.				
4. Stencil on Brass pad.	Injury	According to Track Welding Manual 2011(BBB8341 Version 5),.				
5. Remove & load machinery, equipment and material, secure	Material handling / Back strain / Uneven surfaces	Sufficient employees to load. Housekeeping				
6. Person in charge withdraw protection and cancel occupation (flagmen to stay off track while returning to team). Inform Train control.	Injury / Train delays	General Appendix No. 6 Part 1.				
7. Complete necessary documentation. (Field-sheet)	Loss of Track-data / Derailment	According to Track Welding Manual 2011 (BBB8341 Version 5)				

Remarks

Observation done on task/s number:	
Management intervention: Corrective actions taken/required to close the identified gap in the competency: (E.g.. First aid training/kit, Equipment specific training, Exposure, C-green certification, Safety induction, etc.)	
Follow up date:	
Task observation report to be distributed to the Line Manager Date:	

Line Manager

Date

WRITTEN SAFE WORKING PROCEDURES AND TASK OBSERVATION

BBF3969 VERSION 2

TASKS AND APPLICABLE SAFE WORKING PROCEDURES ASSOCIATED WITH:

WELDING OF BATTERED ENDS

For Rail Network Infrastructure -

PERWAY WELDING

WSWP No.	"SMS/WP/TS/008"
Risk No.	
Latest review date	
Aug-18	
Next review date	
Aug-20	

Task Observer: _____

SAP no: _____

Signature: _____

Observer Name: _____

Observer Grade: _____

SAP no: _____

Signature: _____

Date and location observation performed: _____

TRANSNET

delivering freight reliably freight rail

PPE

Safety Boots, Safety Gloves, Hearing Protection, Reflective Vest (except for personnel doing the welding but the rest of the team must wear it) Barrier Cream, Spats, Apron, Bush hat, Safety Googles (welding), Safety googles (grinding)

Reason for performing the task observation

	Compliance with SMS requirements.		Follow-up on previous Task Observation.
	New Employee.		Other: Describe
	Injury on duty.		
	Identify possible new Risks.		

TASKS | **OBSERVATION**

Sequence/List of basic tasks	Hazards and/or Safety risks	Procedure	Competent		Measures taken	
			Yes	No	Instantaneous	Subsequent
Identify and Mitigate Risks / Hazards **Only qualified and competent person certified by accredited official must PERFORMED THE TASK/This process shall not be carried out in the rain (moist or humid environment)/Track master must bring the Line into the required standard before commencement of work**		Refer to Detailed Risk Analysis in TIMS register Work through HIRA Update Bow - Tie				
Identify and confirm Competencies 1. Must be in possession of PM & Occupation.		"CF Legislative requirements" Transnet Policies applicable License / Certification / Training specifics				
Wear PPE		Check that all PPE stipulated for this "General Task" is Issued, in Good condition, Worn correctly				
Pre- Task Activities		Start up safety meeting Complete DSTI (Identify, discuss, document all site specific hazards & who is present) Specific to this General Task				
1. Safety Talk/Tool box Talks	Train delays	According to instruction, planning office				
2. Erect signage at work area. (Where applicable in urban areas)	Injury to public (ultra violet rays)	Inform public/other personnel by use of warning sign/s.				
3. Off load tools & place material and equipment free from track.	Material handling / Back strain / Uneven surfaces	Sufficient employees to unload.				
4. Welder to check tools for serviceability: - e.g. Welding Plant. - Test earth leakage protector. - Check insulation on welding cables. - Check earth-clamp. - Check oil, water & fuel.	Injury / Electrocution / Damage.	According to Track Welding Manual 2011 (BBB8341 Version5), CODE 29 checklist				
5. Place correct fire prevention equipment close to work area. (e.g. Fire extinguishers, -beaters) and erect fire screens etc.	Burns / veld fires.	According to Track Welding Manual 2011 (BBB8341 Version 5), Determination of fire risk form 3.03				
6. Ensure that protection is deployed. (Person in charge)	Injury / Damage.	According to general appendix no. 6 part 1, section 11.				
Task Execution activities		Specific to this General Task				

1. Pre-heat electrodes.	Faulty welding (moisture) / Damage / Burns	According to Track Welding Manual 2011(BBB8341 Version 5),.				
2. Identify types of rails (according to roll marks) for correct preheating and type of electrodes.	Injury / Damage / Derailment	According to Track Welding Manual 2011(BBB8341 Version 5),.				
3. Mark damaged area, remove all previously welded and loose metal (by grinding) and test for cracks (Liquid penetrant method).	Breakouts on welding / Sparks / Burns / Fire / Noise / Derailment	According to Track Welding Manual 2011(BBB8341 Version 5),.				
4. Connect the welding earth-cable to the work piece.	Damage to track & signals.	According to Track Welding Manual 2011(BBB8341 Version 5),.				
5. Pre-heat rail to correct temperature for that specific type of rail.	Sagging of rail / Damage / Injury.	According to Track Welding Manual 2011(BBB8341 Version 5),/ BBF3960 Version 2				
6. Where applicable ensure that an Infra Worker (Tap-man) is available to warn the Welder of any on-coming dangers.	Damage / Injury	According to Track Welding Manual 2011(BBB8341 Version 5),.				
7. Commence with welding process according to specifications.	Arc-eyes / Burns / Damage / Derailment	According to Track Welding Manual 2011(BBB8341 Version 5),.				
8. Rough-grind within tolerances.	Burns / veld fires / Noise induced hearing loss / Derailment.	According to Track Welding Manual 2011(BBB8341 Version 5),BBF3960 Version 2				
Post-Task Activities		Specific to this General Task House Keeping				
1. Final grinding after cooling to ambient temperature.	Burns / veld fires.	According to Track Welding Manual 2011(BBB8341 Version 5),BBF3960 Version 2				
2. stencil on field side of Rail Head	Injury	According to Track Welding Manual 2011(BBB8341 Version 5),.				
3. Test welded area for cracks using Liquid penetrant method.	Rail breaks / Derailments	According to Track Welding Manual 2011(BBB8341 Version 5),.				
4. Remove & load machinery, equipment and material, secure	Material handling / Back strain / Uneven surfaces	Sufficient employees to load. Housekeeping				
5. Person in charge withdraw protection and cancel occupation (flagmen to stay off track while returning to team). Inform Train control.	Injury / Train delays	General Appendix No. 6 Part 1.				
6. Complete necessary documentation. (Field-sheet)	Loss of Track-data / Derailment	According to Track Welding Manual 2011(BBB8341 Version 5),.				

Remarks

Observation done on task/s number:	
Management intervention: Corrective actions taken/required to close the identified gap in the competency: (E.g.. First aid training/kit, Equipment specific training, Exposure, C-green certification, Safety induction, etc.)	
Follow up date:	
Task observation report to be distributed to the Line Manager Date:	

Line Manager

Date

WRITTEN SAFE WORKING PROCEDURES AND TASK OBSERVATION

BBF 3970 VERSION 2

TASKS AND APPLICABLE SAFE WORKING PROCEDURES ASSOCIATED WITH:

REPAIR WELDING OF CHAIR LUGS

For Rail Network Infrastructure -

PERWAY WELDING

WSWP No.	"SMS/WP/TS/009"
Risk No.	
Latest review date	
Aug-18	
Next review date	
Aug-20	

Task Observer: _____

SAP no: _____

Signature: _____

Observer Name: _____

Observer Grade: _____

SAP no: _____

Signature: _____

Date and location observation performed: _____

TRANSNET

delivering freight reliably freight rail

PPE

Safety Boots, Safety Gloves, Hearing Protection, Reflective Vest (except for personnel doing the welding but the rest of the team must wear it) Barrier Cream, Spats, Apron, Bush hat, Safety Googles (welding), Safety googles (grinding)

Reason for performing the task observation

	Compliance with SMS requirements.		Follow-up on previous Task Observation.
	New Employee.		Other: Describe
	Injury on duty.		
	Identify possible new Risks.		

TASKS		OBSERVATION				
Sequence/List of basic tasks	**Hazards and/or Safety risks**	**Procedure**	**Competent**		**Measures taken**	
			Yes	No	Instantaneous	Subsequent
Identify and Mitigate Risks / Hazards: **Only qualified and competent person certified by accredited official must PERFORMED THE TASK/This process shall not be carried out in the rain (moist or humid environment)**		Refer to Detailed Risk Analysis in TIMS register Work through HIRA Update Bow - Tie				
Identify and confirm Competencies 1. Must be in possession of PM & Occupation.		"CF Legislative requirements" Transnet Policies applicable License / Certification / Training specifics				
Wear PPE		Check that all PPE stipulated for this "General Task" is Issued, in Good condition, Worn correctly				
Pre- Task Activities		Start up safety meeting Complete DSTI (Identify, discuss, document all site specific hazards & who is present) Specific to this General Task				
1. Safety Talk/Tool box Talks	Train delays	According to instruction, planning office				
2. Erect signage at work area. (Where applicable in urban areas)	Injury to public (ultra violet rays)	Inform public/other personnel by use of warning sign/s.				
3. Off load tools & place material and equipment free from track.	Material handling / Back strain / Uneven surfaces	Sufficient employees to unload.				
4. Welder to check tools for serviceability: - e.g. Welding Plant. - Test earth leakage protector. - Check insulation on welding cables. - Check earth-clamp. - Check oil, water & fuel.	Injury / Electrocution / Damage.	According to Track Welding Manual 2011 (BBB8341 Version5), CODE 29 checklist				
5. Place correct fire prevention equipment close to work area. (e.g. Fire extinguishers, -beaters) and erect fire screens etc.	Burns / veld fires.	According to Track Welding Manual 2011 (BBB8341 Version 5), Determination of fire risk form 3.03/BBF 3960 Version 2				
6. Ensure that protection is deployed. (Person in charge)	Injury / Damage.	According to general appendix no. 6 part 1, section 11.				

Task Execution activities		Specific to this General Task				
1. Pre-heat electrodes.	Faulty welding (moisture) / Damage / Burns	According to Track Welding Manual 2011(BBB8341 Version 5),.				
2. Remove the crack by grinding or gas cutting.	Sparks / Burns / veld fires	According general welding procedures.				
4. Connect the welding earth-cable to the Chair lug.	Damage to track & signals.	According to Track Welding Manual 2011(BBB8341 Version 5),.				
5. Where applicable ensure that an Infra Worker (Tap-man) is available to warn the Welder of any on-coming dangers.	Damage / Injury	According to Track Welding Manual 2011(BBB8341 Version 5),.				
6. Commence with welding process according to specifications.	Arc-eyes / Burns / Damage / Derailment	According to Track Welding Manual 2011(BBB8341 Version 5),.				
Post-Task Activities		Specific to this General Task House Keeping				
1. Final grinding after cooling to ambient temperature.	Burns / veld fires.	According to Track Welding Manual 2011(BBB8341 Version 5),BBF3960 Version 2				
2. Test welded area for cracks using Liquid penetrant method.	Rail breaks / Derailments	According to Track Welding Manual 2011(BBB8341 Version 5),.				
3. Remove & load machinery, equipment and material, secure	Material handling / Back strain / Uneven surfaces	Sufficient employees to load. Housekeeping				
4. Person in charge withdraw protection and cancel occupation (flagmen to stay off track while returning to team). Inform Train control.	Injury / Train delays	General Appendix No. 6 Part 1.				
5. Complete necessary documentation. (Field-sheet)	Loss of Track-data / Derailment	According to Track Welding Manual 2011(BBB8341 Version 5),.				

Remarks

Observation done on task/s number:	
Management intervention: Corrective actions taken/required to close the identified gap in the competency: (E.g.. First aid training/kit, Equipment specific training, Exposure, C-green certification, Safety induction, etc.)	
Follow up date:	
Task observation report to be distributed to the Line Manager Date:	

Line Manager

Date

WRITTEN SAFE WORKING PROCEDURES AND TASK OBSERVATION

BBF 3971 VERSION 2

TASKS AND APPLICABLE SAFE WORKING PROCEDURES ASSOCIATED WITH:

WELDING SKID MARKS (Wheel Spin Burn Marks)

For Rail Network Infrastructure -

PERWAY WELDING

WSWP No.	"SMS/WP/TS/010"
Risk No.	
Latest review date	
Aug-18	
Next review date	
Aug-20	

Task Observer: _____

SAP no: _____

Signature: _____

Observer Name: _____

Observer Grade: _____

SAP no: _____

Signature: _____

Date and location observation performed:

TRANSNET delivering freight reliably freight rail

PPE

Safety Boots, Safety Gloves, Hearing Protection, Reflective Vest (except for personnel doing the welding but the rest of the team must wear it) Barrier Cream, Spats, Apron, Bush hat, Safety Googles (welding), Safety googles (grinding)

Reason for performing the task observation

	Compliance with SMS requirements.		Follow-up on previous Task Observation.
	New Employee.		Other: Describe
	Injury on duty.		
	Identify possible new Risks.		

TASKS / OBSERVATION

Sequence/List of basic tasks	Hazards and/or Safety risks	Procedure	Competent		Measures taken	
			Yes	No	Instantaneous	Subsequent
Identify and Mitigate Risks / Hazards: **Only qualified and competent person certified by accredited official must PERFORMED THE TASK/This process shall not be carried out in the rain (moist or humid environment)/Track master must bring the Line into the required standard before commencement of work**		Refer to Detailed Risk Analysis in TIMS register Work through HIRA Update Bow - Tie Perway Track Manual				
Identify and confirm Competencies 1. Must be in possession of PM & Occupation.		"CF Legislative requirements" Transnet Policies applicable License / Certification / Training specifics				
Wear PPE		Check that all PPE stipulated for this "General Task" is Issued, in Good condition, Worn correctly				
Pre- Task Activities		Start up safety meeting Complete DSTI (Identify, discuss, document all site specific hazards & who is present) Specific to this General Task				
1. Safety Talk/Tool box Talks	Train delays	According to instruction, planning office				
2. Erect signage at work area. (Where applicable in urban areas)	Injury to public (ultra violet rays)	Inform public/other personnel by use of warning sign/s.				
3. Off load tools & place material and equipment free from track.	Material handling / Back strain / Uneven surfaces	Sufficient employees to unload.				

4. Welder to check tools for serviceability: - e.g. Welding Plant. - Test earth leakage protector. - Check insulation on welding cables. - Check earth-clamp. - Check oil, water & fuel.	Injury / Electrocution / Damage.	According to Track Welding Manual 2011 (BBB8341 Version5), CODE 29 checklist				
5. Place correct fire prevention equipment close to work area. (e.g. Fire extinguishers, -beaters) and erect fire screens etc.	Burns / veld fires.	According to Track Welding Manual 2011 (BBB8341 Version 5), Determination of fire risk form 3.03/BBF3960 Version 2				
6. Ensure that protection is deployed. (Person in charge)	Injury / Damage.	According to general appendix no. 6 part 1, section 11.				
Task Execution activities		Specific to this General Task				
1. Pre-heat electrodes.	Faulty welding (moisture) / Damage / Burns	According to Track Welding Manual 2011(BBB8341 Version 5),.				
2. Identify types of rails (according to roll marks) for correct preheating and type of electrodes.	Injury / Damage / Derailment	According to Track Welding Manual 2011(BBB8341 Version 5),.				
Loosen the fastenings and remove pads and replace damage sleepers where applicable. (Track master & Team)	Injury / Damage.	Manual for Track Maintenance 2012				
3. Mark damaged area, remove all previously welded and loose metal (by grinding) and test for cracks (Liquid penetrant method).	Breakouts on welding / Sparks / Burns / Fire / Noise / Derailment	According to Track Welding Manual 2011(BBB8341 Version 5),BBF3960 Version 2				
4. Connect the welding earth-cable to the work piece	Damage to track & signals.	According to Track Welding Manual 2011(BBB8341 Version 5),.				
5. Pre-heat rail to correct temperature for that specific type of rail.	Sagging of rail / Damage / Injury.	According to Track Welding Manual 2011(BBB8341 Version 5),.				
6. Where applicable ensure that an Infra Worker (Tap-man) is available to warn the Welder of any on-coming dangers.	Damage / Injury	According to Track Welding Manual 2011(BBB8341 Version 5),.				
7. Commence with welding process according to specifications.	Arc-eyes / Burns / Damage / Derailment	According to Track Welding Manual 2011(BBB8341 Version 5),.				
8. Welding process on CrMn. Duration not longer than 10 minutes.	Radiation / Burns / veld fires / Welding and metal fumes / Visual impairment	According to Track Welding Manual 2011(BBB8341 Version 5),.				
9. Welded area must be covered with thermal blanket for 30 minutes for CrMn.	Damage, Injury	According to Track Welding Manual 2011(BBB8341 Version 5),.				
10. Rough-grind within tolerances.	Burns / veld fires / Noise induced hearing loss / Derailment.	According to Track Welding Manual 2011(BBB8341 Version 5),BBF3960 Version 2				
Post-Task Activities		Specific to this General Task House Keeping				

1. .Fasten the fastenings and replace pads where necessary. (Track master & Team)	Injury / Damage.	Manual for Track Maintenance 2012				
1. Final grinding after cooling to ambient temperature.	Burns / veld fires.	According to Track Welding Manual 2011(BBB8341 Version 5), BBF3960 Version 2				
2. Test welded area for cracks using Liquid penetrant method.	Rail breaks / Derailments	According to Track Welding Manual 2011(BBB8341 Version 5),.				
3. Stencil on field-side of rail-head.	Injury	According to Track Welding Manual 2011(BBB8341 Version 5),.				
4. Remove & load machinery, equipment and material, secure	Material handling / Back strain / Uneven surfaces	Sufficient employees to load. Housekeeping				
5. Person in charge withdraw protection and cancel occupation (flagmen to stay off track while returning to team). Inform Train control.	Injury / Train delays	General Appendix No. 6 Part 1.				
6. Complete necessary documentation. (Field-sheet)	Loss of Track-data / Derailment	According to Track Welding Manual 2011(BBB8341 Version 5),.				

Remarks

Observation done on task/s number:	
Management intervention: Corrective actions taken/required to close the identified gap in the competency: (E.g.. First aid training/kit, Equipment specific training, Exposure, C-green certification, Safety induction, etc.)	
Follow up date:	
Task observation report to be distributed to the Line Manager Date:	

Line Manager

Date

WRITTEN SAFE WORKING PROCEDURES AND TASK OBSERVATION

BBF3972 VERSION 2

TASKS AND APPLICABLE SAFE WORKING PROCEDURES ASSOCIATED WITH:

LOAD AND OFF LOAD EQUIPMENT WITH BLOCK & TACKLE

For Rail Network Infrastructure -

PERWAY WELDING

WSWP No.	"SMS/WP/TS/011"
Risk No.	
Latest review date	
Aug-18	
Next review date	
Aug-20	

Task Observer: _____

SAP no: _____

Signature: _____

Observer Name: _____

Observer Grade: _____

SAP no: _____

Signature: _____

Date and location observation performed: _____

TRANSNET

delivering freight reliably freight rail

PPE

Safety boots, Gloves, Hard Hat

Reason for performing the task observation

	Compliance with SMS requirements.		Follow-up on previous Task Observation.
	New Employee.		Other: Describe
	Injury on duty.		
	Identify possible new Risks.		

TASKS / OBSERVATION

Sequence/List of basic tasks	Hazards and/or Safety risks	Procedure	Competent Yes	Competent No	Measures taken: Instantaneous	Measures taken: Subsequent
Identify and Mitigate Risks / Hazards **Only qualified and competent person certified by accredited official must PERFORMED THE TASK/Ensure that the beam and the equipment does not swing out uncontrollably. Maintain control during this process.**	Injury	Refer to Detailed Risk Analysis in TIMS register Work through HIRA Update Bow - Tie				
Identify and confirm Competencies 1. Must be in possession of PM & Occupation.		"CF Legislative requirements" Transnet Policies applicable License / Certification / Training specifics				
Wear PPE		Check that all PPE stipulated for this "General Task" is Issued, in Good condition, Worn correctly				
Pre- Task Activities		Start up safety meeting Complete DSTI (Identify, discuss, document all site specific hazards & who is present) Specific to this General Task				
1. Safety Talk/Tool box Talks	Train delays	According to instruction, planning office				
2. Ensure (as far as possible) that the vehicle is parked on a level surface. If parked on an incline the load can swing out uncontrollably.	Uncontrolled operation / Injury	Ensure vehicle is level. Traditional Team (Track) Training manual.				
3. Only certified persons are to use / operate Block & Tackle.	Injury / Damage	Act 85, Certificate. Traditional Team (Track) Training manual / Code 29				
4. Check Block & Tackle and Beam against log sheets (CODE 29) before use.	Injury / Damage	CODE 29, Traditional Team (Track) Training manual.				
Task Execution activities		Specific to this General Task				
1. Release Safety Pin and swing arm into preferred position to lift the required equipment.	Injury / Damage	Traditional Team (Track) Training manual.				
2. Lower and attach hook to equipment (Use D-Shackle where necessary).	Injury / Damage	Traditional Team (Track) Training manual.				
3. Take up slack on chain before releasing equipment to be loaded/unloaded	Injury / Damage	Supervisor to ensure correct sequence is followed.				

4. Operator to take up safe position in order not to get injured. Ensure hands are in a safe position.	Injury (hands) / Damage	Ensure hands are clear of nip-points. (on top of beam, between beam and vehicle, between equipment & vehicle)				
5. Operator pulls on chain to lift / lower equipment.	Injury	According to instruction				
7. Ensure that the beam and the equipment does not swing out uncontrollably. Maintain control during this process.	Injury / Damage	Supervisor must ensure that process is done in a controlled manner, sufficient help				
8. Lower/Lift equipment and continuously check for the smooth flowing of the operation. Workers must not stand under the equipment being loaded / off-loaded.	Injury / Damage	Stand clear.				
Post-Task Activities		Specific to this General Task House Keeping				
1. When equipment is in the desired position, lower / lift to required position and unhook.	Injury / Damage	Ensure unhooked equipment is secure.				
2. Return the beam and tackle to the original position and secure - Insert safety pin - Take up slack on chains and secure.	Injury / Damage	Secure tackle.				

Remarks

Observation done on task/s number:	
Management intervention: Corrective actions taken/required to close the identified gap in the competency: (E.g.. First aid training/kit, Equipment specific training, Exposure, C-green certification, Safety induction, etc.)	
Follow up date:	
Task observation report to be distributed to the Line Manager Date:	

Line Manager

Date

WRITTEN SAFE WORKING PROCEDURES AND TASK OBSERVATION		BBF3974 VERSION 2

TASKS AND APPLICABLE SAFE WORKING PROCEDURES ASSOCIATED WITH:

DEVELOPMENT OF FILM (X-RAYS)

For Rail Network Infrastructure -

PERMANENT WAY WELDING

WSWP No.	"SMS/WP/TS/013"
Risk No.	
Latest review date	
Aug-18	
Next review date	
Aug-20	

Task Observer: _____

SAP no: _____

Signature: _____

Observer Name: _____

Observer Grade: _____

SAP no: _____

Signature: _____

Date and Location Observation performed: _____

TRANSNET

delivering freight reliably freight rail

PPE

Safety Boots , Thermoluminescent dosimeter (TLD), Electronic Pocket Dosimeter (EPD), Survey Meter, Radiation warning signs, Pvc Gloves, Eye protection, Chemical Respirator

Reason for performing the task observation

	Compliance with SMS requirements		Follow-up of previous Task Observation.
	New Employee.		Other Describe
	Injury on duty.		
	Identify possible risk		

TASKS		OBSERVATION				
Sequence/List of basic tasks	**Hazards and/or Safety risks**	**Procedures**	**Competent**		**Measures taken**	
			Yes	No	Instantaneous	Subsequent
Identify and Mitigate Risks / Hazards	Radiation Risk	Track Maintenance Manual 2000				
Identify and confirm Competencies 1.Apply for PM. 2.	No Apparent Risk	According to instruction				
Wear PPE	Radiation Exposure					
Pre- Task Activities 1. Safety Talk 2.Preparation. Mixing of chemicals (developer & fixer) with water & filling of machine. 3. Warming up machine	Chemicals: Spillage Wastes Chemicals: Nuisance Wastes	2. MSDS, mix according to standards 3. Activate extraction fans.				
Task Execution activities 1. Enter dark room and develop film	Loading film to fast in developer. Jamming of films in rollers while in process.	Load according to light specifications.				
2.Enter dark room and develop film.	Loading film to fast in developer. Jamming of films	Load according to light specifications.				
Post-Task Activities 1. Placement of film in a folder and evaluation with report. 2. Neutralize water with relevant agent as prescribed by Environmental Management. 3. Complete necessary documentation.	1. Film data not properly captured 2. Chemicals: Pollution 3. No Apparent Risk	1. Ensure films is properly marked 2. As per procedure. 3. According to instruction.				

Done by Contractors

Remarks

Observation done on task/s number:	
Management intervention: Corrective actions taken/required to close the identified gap in the competency: (E.g.. First aid training/kit, Equipment specific training, Exposure, C-green certification, Safety induction, etc.)	
Follow up date:	
Task observation report to be distributed to the Line Manager Date:	

Line Manager

Date

WRITTEN SAFE WORKING PROCEDURES AND TASK OBSERVATION

BBF…. VERSION 1

TASKS AND APPLICABLE SAFE WORKING PROCEDURES ASSOCIATED WITH:

OPERATING DIGITAL RADIOGRAPHY (X-RAY) MACHINE

For Rail Network Infrastructure -

THERMIT WELDS

PPE

WSWP No.	**"SMS/WP/TS/014"**
Risk No.	
Latest review date	
Aug-18	
Next review date	
Aug-20	

Task Observer: _____

SAP no: _____

Signature: _____

Observer Name: _____

Observer Grade: _____

SAP no: _____

Signature: _____

Date and location observation performed:

_____

TRANSNET

delivering freight reliably freight rail

Safety Boots, Reflective Vest, Site Demarcation Barrier , Thermoluminescent dosimeter (TLD), Electronic Pocket Dosimeter (EPD), Survey Meter, Radiation warning signs

Reason for performing the task observation

	Compliance with SMS requirements		Follow-up on previous Task Observation.
	New Employee.		Other: Describe
	Injury on duty.		
	Identify possible new Risks.		

TASKS | **OBSERVATION**

Sequence/List of basic tasks	Hazards and/or Safety risks	Procedure	Competent		Measures taken	
			Yes	No	Instantaneous	Subsequent
Identify and Mitigate Risks / Hazards 1. Ensure that there are 2 flag man on either side of weld/s of interest at a safe distance for protection of radiographers 2. Ensure that all radiographers have radiation monitors	1. Ionizing radiation 2. Trains	1. SNT-TC-1A NDT Recommended practice 2. Code of practice for the use of X-Rays 3. BBB8375 version 3				
Identify and confirm Competencies 1. Level 1 RT certification (work under supervision) 2. Level 2 RT certification (Works independently)		1. SNT-TC-1A NDT Recommended practice 2. Code of practice for the use of X-Rays				
Wear PPE - Boots, Radiation monitors (TLD, EPD), Reflector	**Biological effect** **Somatic:** Fetal development abnormalities, radiation sickness, leukemia, acute radiation syndrome, shortening of life **Genetic:** Chromosomes mutation	Check that all PPE stipulated for this "General Task" is Issued, in Good condition, Worn correctly				

Pre- Task Activities **Before leaving the depot:** 1. Ensure that the machine battery is charged 2. Prepare field sheet 3. Check that radiation monitors are in working condition 4. Prepare films, lead sheets, labels, IQI, masking tape, machine stand **Onsite:** 1. Wear PPE 2. Distinguish a safe working distance for non radiographers and place radiation sign at the safe distance 3. Ensure that the weld is clean 4. Note any visual or surface irregularity or defect on field sheet	Inability to conduct tests Ionizing radiation	1. BBB8375 version 3				
Task Execution activities Pre- Testing 1. Set-up the X-Ray machine and place film and IQI 2. Conduct a test run to validate testing parameters (on both the web and the foot) 3.Scan the test run films and evaluate image for compliance Testing and evaluation of results 1. Once testing parameters have been validated, production may commence 2. Label the film as per specification 3. Place film on the web or under the foot (Ensure film stability by attaching it to the rail using a masking tape 4. Expose either the web or the foot (place X-Ray machine on the stand for testing the foot) as per specification 5. Spray tested weld with a blue spray paint 6. Insert film in scanner and evaluate and interpret results on laptop screen 7. Complete field sheet (insert X-Ray results)	Re-shoots, Limited access to the foot or the web, defective joints, poor results evaluation skills,	1. BBB8375 version 3				
Post-Task Activities 1. Clear working site 2. Compile report		1. BBB8375 version 3				

Remarks

Observation done on task/s number:	
Management intervention: Corrective actions taken/required to close the identified gap in the competency: (E.g.. First aid training/kit, Equipment specific training, Exposure, C-green certification, Safety induction, etc.)	
Follow up date:	
Task observation report to be distributed to the Line Manager Date:	

Line Manager

Date

MASTER AGREEMENT

entered into by and between

TRANSNET SOC LTD

and

.....

Agreement Number	**HOAC-HO-0047619**
Commencement Date	**.....**
Expiry Date	**.....**

TABLE OF CONTENTS

1 INTRODUCTION....4
2 DEFINITIONS....4
3 INTERPRETATION....7
4 NATURE AND SCOPE....8
5 AUTHORITY OF PARTIES....8
6 DURATION/TERM AND CANCELLATION....8
7 RISK MANAGEMENT....9
8 TRANSNET'S OBLIGATIONS....9
9 GENERAL OBLIGATIONS OF THE SUPPLIER....9
10 SUBCONTRACTING....12
11 PAYMENT TO SUB-CONTRACTORS....12
12 B-BBEE AND SOCIO-ECONOMIC OBLIGATIONS....12
13 PENALTIES....13
14 INVOICES AND PAYMENT....15
15 PRICE ADJUSTMENTS....16
16 WARRANTIES APPLICABLE TO GOODS....17
17 THIRD PARTY INDEMNITY....17
18 INSPECTION APPLICABLE TO GOODS....17
19 DEFECTIVE GOODS....18
20 TOTAL OR PARTIAL FAILURE TO PERFORM....19
21 NON CONFORMANCE OF GOODS PROCURED....19
22 RIGHTS ON CANCELLATION....20
23 BREACH AND TERMINATION....20
24 CESSIONS AND ASSIGNMENTS AS PER NT INSTRUCTION NOTE 08 OF 2022/2023....21
25 FORCE MAJEURE....21
26 PROTECTION OF PERSONAL INFORMATION....22
27 CONFIDENTIALITY....24
28 INSURANCES....25
29 LIMITATION OF LIABILITY....26
30 INTELLECTUAL PROPERTY RIGHTS....27
31 NON-WAIVER....29
32 PARTIAL INVALIDITY....29
33 DISPUTE RESOLUTION....29
34 ADDRESSES FOR NOTICES....29
35 WHOLE AND ONLY AGREEMENT....30
36 AMENDMENT AND CHANGE CONTROL....31
37 GENERAL....31
38 DATABASE OF RESTRICTED SUPPLIER....31

SCHEDULE 1 – WORK ORDER / SCHEDULE OF REQUIREMENTS

1 INTRODUCTION

This Agreement is entered into by and between:

Transnet SOC Ltd [Registration Number 1990/000900/30] whose registered address is **138 Eloff Street Braamfontein Johannesburg 2000**, Republic of South Africa [**Transnet**]

and

.....[Registration Number **.....**] whose registered address is t**he Supplier**].

NOW THEREFORE, IT IS AGREED:

1.1 Transnet hereby appoints the Supplier to provide, and Transnet undertakes to accept the supply of Goods / provision of Services provided for herein, as formally agreed between the Parties and in accordance with the Schedule of Requirements / Work Orders issued as a schedule to this Agreement; and

1.2 the Supplier hereby undertakes to provide the Goods provided for herein, as formally agreed between the Parties and in accordance with the Schedule of Requirements issued as a schedule to this Agreement.

2 DEFINITIONS

Where the following words or phrases are used in this Agreement, such words or phrases shall have the meaning assigned thereto in this clause, except where the context clearly requires otherwise:

2.1 **AFSA** means the Arbitration Foundation of South Africa;

2.2 **Agreement** means this Agreement and its associated schedules and/or annexures and/or appendices, and/or schedules, including the Schedule of Requirements/Work Orders, the technical specifications for the Goods and such special conditions as shall apply to this Agreement, together with the General Tender Conditions and any additional provisions in the associated bid documents tendered by the Supplier [as agreed, in writing, between the Parties], which collectively and exclusively govern the supply of Goods and provision of ancillary Services by the Supplier to Transnet;

2.3 **Assignment** refers to the transfer of rights and obligations in a contract from an assigner to an assignee.

2.4 **Background Intellectual Property** means all Intellectual Property introduced and required by either Party to give effect to their obligations under this Agreement owned in whole or in part by or licensed to either Party or their affiliates prior to the Commencement Date or developed after the Commencement Date otherwise pursuant to this Agreement;

2.5 **Business Day(s)** means Mondays to Fridays between 07:30 and 16:00, excluding public holidays as proclaimed in South Africa;

2.6 **Cession** refers to the transfer of only the rights a service provider has in terms of a contract from it to a third party.

2.7 **Commencement Date** means **……**, notwithstanding the signature date of this Agreement;

2.8 **Confidential Information** means any information or other data, whether in written, oral, graphic or in any other form such as in documents, papers, memoranda, correspondence, notebooks, reports, drawings, diagrams, discs, articles, samples, test results, prototypes, designs, plans, formulae, patents, or inventor's certificates, which a Party discloses or provides to the other Party [intentionally or unintentionally, or as a result of one Party permitting the representative of the other Party to visit any of its premises], or which otherwise becomes known to a Party, and which is not in the public domain and includes, without limiting the generality of the term:

a) information relating to methods of operation, data and plans of the disclosing Party;

b) the contents of this Agreement;

c) private and personal details of employees or clients of the disclosing Party or any other person where an onus rests on the disclosing Party to maintain the confidentiality of such information;

d) any information disclosed by either Party and which is clearly marked as being confidential or secret;

e) information relating to the strategic objectives and planning of the disclosing Party relating to its existing and planned future business activities;

f) information relating to the past, present and future research and development of the disclosing Party;

g) information relating to the business activities, business relationships, products, services, customers, clients and Subcontractors of the disclosing Party where an onus rests on the disclosing Party to maintain the confidentiality of such information;

h) information contained in the software and associated material and documentation belonging to the disclosing Party;

i) technical and scientific information, Know-How and trade secrets of a disclosing Party including inventions, applications and processes;

j) Copyright works;

k) commercial, financial and marketing information;

l) data concerning architecture, demonstrations, tools and techniques, processes, machinery and equipment of the disclosing Party;

m) plans, designs, concepts, drawings, functional and technical requirements and specifications of the disclosing Party;

n) information concerning faults or defects in Goods, equipment, hardware or software or the incidence of such faults or defects; and

o) information concerning the charges, fees and/or costs of the disclosing Party or its authorised Subcontractors, or their methods, practices or service performance levels actually achieved;

2.9 **Copyright** means the right in expressions, procedures, methods of operations or mathematical concepts, computer program codes, compilations of data or other material, literary works, musical works, artistic works, sound recordings, broadcasts, program carrying signals, published editions,

photographic works, or cinematographic works of the copyright owner to do or to authorise the doing of certain acts specified in respect of the different categories of works;

2.10 **Data** means all data, databases, documents, information, graphics, text or other material in an electronic or tangible medium which the Parties to this Agreement generate, collect, process, store or transmit in relation to their business;

2.11 **Designs** mean registered Designs and/or Design applications and will include the monopoly right granted for the protection of an independently created industrial design including designs dictated essentially by technical or functional considerations as well as topographies of integrated circuits and integrated circuits;

2.12 **Expiry Date** means **.....**;

2.13 **Foreground Intellectual Property** means all Intellectual Property developed by either Party pursuant to this Agreement;

2.14 **Goods** means **For the provision of alumininothermic welding of railway rails on an as and when required basis for a period a period six (06) months**, the material / products specified in the Schedule of Requirements appended as Schedule 1 hereto;

2.15 **ICC Incoterms** means the the latest version of commercial trade terms as published by the International Chamber of Commerce, Paris [ICC], which are otherwise referred to as purchase terms and which define precisely the responsibilities, costs and risks of the buyer [**Transnet**] and the seller [**the Supplier].** Incoterms are only applicable to contracts involving the import or export of Goods from one country to another and for the purpose of this Agreement, if applicable, shall mean the designated Incoterm as stipulated in Schedule 1 hereto. Further details of the Incoterm [purchase terms] for this Agreement, if applicable, can be viewed at the International Business Training website - http://www.i-b-t.net/incoterms.html;

2.16 **Intellectual Property** means Patents, Designs, Know-How, Copyright and Trade Marks and all rights having equivalent or similar effect which may exist anywhere in the world and includes all future additions and improvements to the Intellectual Property;

2.17 **Know-How** means all Confidential Information of whatever nature relating to the Intellectual Property and its exploitation as well as all other Confidential Information generally relating to Transnet's field of technology, including technical information, processing or manufacturing techniques, Designs, specifications, formulae, systems, processes, information concerning materials and marketing and business information in general;

2.18 **Parties** mean the Parties to this Agreement together with their subsidiaries, divisions, business units, successors-in-title and assigns;

2.19 **Party** means either one of these Parties;

2.20 **Patents** mean registered Patents and Patent applications, once the latter have proceeded to grant, and includes a right granted for any inventions, products or processes in all fields of technology;

2.21 **Permitted Purpose** means any activity or process to be undertaken or supervised by a Staff member of one Party during the term of this Agreement, for which purpose authorised disclosure of the other Party's Confidential Information or Intellectual Property is a prerequisite in order to enable such activity or process to be accomplished;

2.22 **Price(s)** means the agreed Price(s) for the Goods to be purchased from the Supplier by Transnet, as detailed in the Schedule of Requirements, issued in accordance with this Agreement, as amended by mutual agreement between the Parties and in accordance with the terms and conditions in this Agreement from time to time;

2.23 **Purchase Order(s)** means official orders issued by an operating division of Transnet to the Supplier for the supply of Goods or Services;

2.24 **Service Level Agreement** or **SLA** means the processes, deliverables, key performance indicators and performance standards relating to the Goods to be provided by the Supplier;

2.25 **Staff** means any partner, employee, agent, consultant, independent associate or contractor, Subcontractor and the staff of such Subcontractor, or other authorised representative of either Party;

2.26 **Schedule of Requirements** means Schedule 1 hereto;

2.27 **Subcontract** means any contract or agreement or proposed contract or agreement between the Supplier and any third party whereby that third party agrees to provide to the Supplier the Goods or related Services or any part thereof or material used in the manufacture of the Goods or any part thereof;

2.28 **Subcontractor** means the third party with whom the Supplier enters into a Subcontract;

2.29 **Tax Invoice** means the document as required by Section 20 of the VAT Act, as may be amended from time to time;

2.30 **Trade Marks** mean registered Trade Marks and Trade Mark applications and include any sign or logo, or combination of signs and/or logos capable of distinguishing the goods or services of one undertaking from those of another undertaking;

2.31 **VAT** means Value-Added Tax chargeable in terms of the VAT Act, 89 of 1991, as may be amended from time to time; and

2.32 **VAT Act** means the Value Added Tax Act, No 89 of 1991, as may be amended from time to time.

3 INTERPRETATION

3.1 Clause headings in this Agreement are included for ease of reference only and do not form part of this Agreement for the purposes of interpretation or for any other purpose. No provision shall be construed against or interpreted to the disadvantage of either Party hereto by reason of such Party having or being deemed to have structured or drafted such provision.

3.2 Any term, word or phrase used in this Agreement, other than those defined under the clause heading *"Definitions"* shall be given its plain English meaning, and those terms, words, acronyms, and phrases used in this Agreement will be interpreted in accordance with the generally accepted meanings accorded thereto.

3.3 A reference to the singular incorporates a reference to the plural and *vice versa*.

3.4 A reference to natural persons incorporates a reference to legal persons and *vice versa*.

3.5 A reference to a particular gender incorporates a reference to the other gender.

4 NATURE AND SCOPE

4.1 This Agreement is an agreement under the terms and conditions of which the Supplier will arrange for the supply/provision to Transnet of the Goods which meet the requirements and specifications of Transnet, the delivery of which is controlled by means of Purchase Orders to be issued by Transnet and executed by the Supplier in accordance with this Agreement.

4.2 Such Purchase Orders and deliveries to Transnet shall be agreed between the Parties from time to time, subject to the terms of the Schedule of Requirements/Work Order.

4.3 Each properly executed Purchase Order forms an inseparable part of this Agreement as if it were fully incorporated into the body of this Agreement.

4.4 During the period of this Agreement, both Parties can make written suggestions for amendments to the Schedule of Requirements/Work Orders in accordance with procedures set out in clause 362 *[Amendment and Change Control]*. A Party will advise the other Party within 14 [fourteen] Business Days, or such other period as mutually agreed, whether the amendment is acceptable.

4.5 Insofar as any term, provision or condition in the Schedule of Requirements/Work Order conflicts with a like term, provision or condition in this Agreement and/or a Purchase Order, the term or provision or condition in this Master Agreement shall prevail, unless such term or provision or condition in this Master Agreement has been specifically revoked or amended by mutual written agreement between the Parties.

4.6 Time will be of the essence and the Supplier will perform its obligations under this Agreement in accordance with the timeframe(s) [if any] set out in the relevant schedule, save that the Supplier will not be liable under this clause if it is unable to meet such obligation within the time required as a direct result of any act or omission by Transnet and it has used its best endeavours to advise Transnet of such act or omission. In the event of such delay, any time deadlines detailed in the relevant schedule shall be extended by a period equal to the period of that delay.

5 AUTHORITY OF PARTIES

5.1 Nothing in this Agreement will constitute or be deemed to constitute a partnership between the Parties, or constitute or be deemed to constitute the Parties as agents or employees of one another for any purpose or in any form whatsoever.

5.2 Neither Party shall be entitled to, or have the power or authority to:

a) enter into an agreement in the name of the other; or

b) give any warranty, representation or undertaking on the other's behalf; or

c) create any liability against the other or bind the other’s credit in any way or for any purpose whatsoever.

6 DURATION/TERM AND CANCELLATION

6.1 Notwithstanding the date of signature hereof, the Commencement Date if this Agreement is **…….** and the duration shall be for two [02] years period, expiring **on ……,** unless:

a) this Agreement is terminated by either Party in accordance with the provisions incorporated herein or in any schedules or annexures appended hereto, or otherwise in accordance with law or equity; or

b) this Agreement is extended at Transnet's option for a further period to be agreed by the Parties.

6.2 Notwithstanding clause 233 *[Breach and Termination]*, either Party may cancel this Agreement without cause by giving 30 [thirty] calendar days prior written notice thereof to the other Party, provided that in such instance, this Agreement will nevertheless be applicable in respect of all Purchase Orders which have been placed prior to the date of such cancellation.

7 RISK MANAGEMENT

7.1 Where Transnet determines appropriate, within 2 weeks from the date of contract signature, the Parties are to meet to prepare and maintain a contract Risk Register. The Risk Register shall include a description of the risks and a description of the actions which are to be taken to avoid or reduce these risks which both Parties shall jointly determne.

7.2 Contract progress meetings shall be held monthly, or unless otherwise agreed between the Parties in writing. The purposes of these progress meetings shall be to capture the number of late deliverables against agreed milestones, actual costs against payment plans, performance issues or concerns, contract requirements not achieved, the status of previous corrective actions and risk management. Minutes of meetings shall be maintained and signed off between the Parties throughout the contract period

8 TRANSNET'S OBLIGATIONS

8.1 Transnet undertakes to promptly comply with any reasonable request by the Supplier for information, including information concerning Transnet's operations and activities, that relates to the Goods as may be necessary for the Supplier to provide the Goods, but for no other purpose. However, Transnet's compliance with any request for information is subject to any internal security rules and requirements and subject to the observance by the Supplier of its confidentiality obligations under this Agreement.

8.2 The Supplier shall give Transnet reasonable notice of any information it requires.

8.3 Transnet agrees to provide the Supplier or its Personnel such access to and use of its facilities as is necessary to allow the Supplier to perform its obligations under this Agreement.

9 GENERAL OBLIGATIONS OF THE SUPPLIER

9.1 The Supplier shall:

a) respond promptly to all complaints and enquiries from Transnet;

b) inform Transnet immediately of any dispute or complaint arising in relation to the storage or delivery of the Goods;

c) conduct its business in a professional manner which will reflect positively upon the Supplier and the Supplier products/services;

d) keep full records clearly indicating all transactions concluded by the Supplier relating to the delivery of the Goods and keep such records for at least 5 [five] years from the date of each such transaction;

e) obtain, and at all times maintain in full force and effect, any and all licences, permits and the like required under applicable laws for the provision of the Goods and ancillary Services and the conduct of the business and activities of the Supplier ;

f) observe and ensure compliance with all requirements and obligations as set out in the labour and related legislation of South Africa, including the Occupational Health and Safety Act, 85 of 1993, as may be amended from time to time;

g) observe and ensure compliance with all requirements and objectives of the Transnet Supplier Integrity Pact as agreed to in response to the RFP. The general purpose of the Supplier Integrity Pact is to agree to avoid all forms of dishonesty, fraud and corruption by following a system that is fair, transparent and free from any undue influence prior to, during and subsequent to the currency of the procurement event leading to this Agreement and this Agreement itself;

h) comply with all applicable environmental legislation and regulations, demonstrate sound environmental performance and have an environmental management policy which ensures that its products, including the Goods or ancillary Services are procured, produced, packaged, delivered and are capable of being used and ultimately disposed of in a way that is environmentally appropriate; and

i) ensure the validity of all renewable certifications, including but not limited to its B-BBEE Verification Certificate, throughout the entire term of this Agreement. Should the Supplier fail to present Transnet with such renewals as they become due, Transnet shall be entitled, in addition to any other rights and remedies that it may have in terms of the Agreement, to terminate this Agreement forthwith without any liability and without prejudice to any claims which Transnet may have for damages against the Supplier .

9.2 The Supplier acknowledges and agrees that it shall at all times:

a) render the supply of the Goods and ancillary Services (if applicable) and perform all its duties with honesty and integrity;

b) communicate openly and honestly with Transnet regarding the supply and performance of the Goods and demonstrate a commitment to effecting the supply and performing ancillary Services timeously, efficiently and at least to the required standards;

c) endeavour to provide the highest possible standards of service and workmanship, with a reasonable degree of care and diligence;

d) use its best endeavours and make every diligent effort to meet agreed deadlines;

e) treat its own Staff, as well as all Transnet's Staff, with fairness and courtesy and respect for their human rights;

f) practice and promote its own internal policies aimed at prohibiting and preventing unfair discrimination;

g) treat all enquiries from Transnet in connection with the supply of the Goods and/or ancillary Services with courtesy and respond to all enquiries promptly and efficiently. Where the Supplier is unable to comply with the provisions of this clause, the Supplier will advise

Transnet of the delay and the reasons therefor and will keep Transnet informed of progress made regarding the enquiry;

h) when requested by Transnet, provide clear and accurate information regarding the Supplier's/Service Provider's own policies and procedures, excluding Know-How and other Confidential Information, except where a non-disclosure undertaking has been entered into between the Parties;

i) not allow a conflict of interest to develop between its own interests [or the interests of any of its other customers] and the interests of Transnet;

j) not accept or offer, nor allow, induce or promote the acceptance or offering of any gratuity, enticement, incentive or gift that could reasonably be regarded as bribery or an attempt to otherwise exert undue influence over the recipient;

k) not mislead Transnet or its officers, employees and stakeholders, whether by act or omission;

l) not otherwise act in an unethical manner or do anything which could reasonably be expected to damage or tarnish Transnet's reputation or business image;

m) immediately report to Transnet any unethical, fraudulent or otherwise unlawful conduct of which it becomes aware in connection with Transnet or the supply of Goods or ancillary Services to Transnet;

n) ensure that at all times, during the currency of this Agreement, it complies with all obligations and commitments in terms of the provisions of the Income Tax Act, No 58 of 1962, the VAT Act or any other tax legislation relating to their liability for Income Tax, VAT, Pay as You Earn or any other tax. The Supplier shall further ensure Tax Clearance Compliance, for the duration of this Agreement;

o) not victimise, harass or discriminate against any employee of either Party to this Agreement or any applicant for employment with either Party to this Agreement due to their gender, race, disability, age, religious belief, sexual orientation or part-time status. This provision applies, but is not limited to employment, upgrading, work environment, demotion, transfer, recruitment, recruitment advertising, termination of employment, rates of pay or other forms of compensation and selection for training.

p) shall ensure that its employees, agents and Subcontractors will not breach any applicable discrimination legislation and any amendments and re-enactments thereof.

9.3 In compliance with the National Railway Safety Regulator Act, 16 of 2002, as may be amended from time to time, the Supplier shall ensure that the Goods and ancillary Services, to be supplied to Transnet under the terms and conditions of this Agreement, comply fully with the Specifications as set forth in Schedule 1 hereto, and shall thereby adhere [as applicable] to railway safety requirements and/or regulations. Permission for the engagement of a Subcontractor by the Supplier, as applicable, shall be subject to a review of the capability of the proposed Subcontractor to comply with the specified railway safety requirements and/or regulations. The Supplier and/or its Subcontractor shall grant Transnet access, during the term of this Agreement, to review any safety-related activities, including the coordination of such activities across all parts of its organisation.

10 SUBCONTRACTING

10.1 The Supplier may only enter into a subcontracting arrangement or replace a subcontractor with the approval of Transnet.

10.2 If the Supplier subcontracts a portion of the contract to another person without declaring it to Transnet reserves the right to penalise the Supplier up to 10% of the value of the contract.

10.3 Where the Supplier seeks to replace a subcontractor Transnet shall be entitled to obtain representations or input from Supplier the initial subcontractor who was part of the tender process whose credentials were used in the tender submission. Transnet shall consider input from all parties concerned, in order to take a decision on the proposed replacement of the subcontractor. The subcontracting arrangement or contract remains between the Supplier (main contractor) and the subcontractor.

10.4 Should Transnet approve the Supplier subcontracting arrangement, the Supplier and not the Sub-contractor will at all times be held liable for performance in terms of its contractual obligations.

10.5 The Supplier may not subcontract in such a manner that the the overall value of the contract is reduced to below the stipulated minimum threshold.

10.6 The Supplier may not subcontract more than 25% of the value of the contract to any other enterprise that does not have an equal or higher B-BBEE status level of contributor than the Supplier , unless the contract is subcontracted to an Exempted Micro Enterprise (EME) that has the capability and ability to execute the Subcontract.

11 PAYMENT TO SUB-CONTRACTORS

11.1 Transnet reserves the right, in its sole discretion, to make payment directly to the sub-contractor of the Supplier , subject to the following conditions:

a) Receipt of an undisputed invoice from the sub-contractor; and

b) Receipt of written confirmation from the Supplier that the amounts claimed by the sub-contractor are correct and that the services for which the sub-contractor has requested payment were rendered to the satisfaction of the Supplier , against the required standards.

11.2 Nothing contained in this clause must be interpreted as bestowing on any sub-contractor a right or legitimate expectation to be paid directly by Transnet. Furthermore, this clause does not bestow any right or legitimate expectation on the Supplier to demand that Transnet pay its sub-contractor directly. The decision to pay any sub-contractor directly, remains that of Transnet alone.

11.3 The Supplier remains liable for its contractual obligations under the Agreement, including all services rendered by the sub-contractor.

11.4 This clause does not establish any contractual relationship between Transnet and any sub-contractor of the Supplier , whatsoever.

12 B-BBEE AND SOCIO-ECONOMIC OBLIGATIONS

12.1 **B-BBEE Scorecard**

a) Transnet fully endorses and supports the Broad-Based Black Economic Empowerment Programme and is strongly of the opinion that all South African business enterprises have an equal obligation to redress the imbalances of the past.

b) In response to this requirement, the Supplier shall submit to Transnet's Contract Manager or such other designated person details of its B-BBEE status in terms of the latest Codes of Good Practice issued in terms of the B-BBEE Act and proof thereof at the beginning of March each year during the currency of this Agreement.

c) The Supplier undertakes to notify and provide full details to Transnet in the event there is:

(i) a change in the Supplier B-BBEE status which is less than what it was at the time of its appointment including the impact thereof; and

(ii) a corporate or internal restructure or change in control of the Supplier which has or likely to impact negatively on the Supplier's/ Service Provider's B-BBEE status.

d) Notwithstanding any other reporting requirement in terms hereof, the Supplier Service Provider undertakes to provide any B-BBEE data (underlying data relating to the Supplier /Service Provider which has been relied upon or utilised by a verification agency or auditor for the purposes of issuing a verification certificate in respect of the Supplier B-BBEE status) which Transnet may request on written notice within 30 (thirty) calendar days of such request. A failure to provide such data shall constitute a Supplier/ Service Provider Default and may be dealt with in accordance with the provisions of clause 23.

e) In the event there is a change in the Supplier's/ Service Provider's B-BBEE status, then the provisions of clause 233 shall apply.

12.2 **Green Economy/Carbon Footprint**

a) The Supplier has in its bid provided Transnet with an understanding of the Supplier's/Service Provider's position with regard to issues such as waste disposal, recycling and energy conservation.

13 PENALTIES

13.1 **Penalties for Non-compliance to Service Level Agreement**

Where the Supplier fails to deliver the Goods within the agreed and accepted milestone timelines and provided that the cause of the delay was not due to a fault of Transnet, penalties shall be imposed at 2 % of the Purchase Order value.

13.2 **Non-compliance penalties for subcontracting**

a) Breach of subcontracting obligations provides Transnet cause to terminate the contract in certain cases where there is a material Non-compliance.

b) If the Supplier fails to achieve its subcontracting commitments as per their bid submission ("a **Non-Compliance**"), the Supplier shall pay a Non-Compliance penalty ("Non-compliance Penalty") to Transnet in respect of such Non-compliance.

c) Such penalty shall be calculated based on the difference in value between the committed and delivered subcontracting value (i.e. 100% of the undelivered subcontracting value) plus an additional 10% (ten per cent) of such difference.

Non-compliance Penalty Certificate:

d) If any Non-compliance Penalty arises, the Supplier Development Manager shall issue a Non-compliance Penalty Certificate 90 business days before the expiry of the contract indicating the Non-compliance Penalties which have accrued during that period.

e) A Non-compliance Penalty Certificate shall be prima facie proof of the matters to which it relates. If the Supplier disputes any of the amounts set out in a Non-compliance Penalty Certificate:

- the dispute shall be resolved in accordance with the provisions of the Agreement; and
- if pursuant to that referral, it is determined that the Supplier owes any amount to Transnet pursuant to the Non-compliance Penalty Certificate, then the Supplier shall pay such amount to Transnet within 10 (ten) Business Days of the determination made pursuant to such determination and an accompanying valid Tax Invoice.

Payment of Non-compliance Penalties:

f) Subject to Clause (e) above, the Supplier shall pay the Non-compliance Penalty indicated in the Non-compliance Penalty Certificate within 10 (ten) Business Days of Transnet issuing a valid Tax Invoice to the Supplier for the amount set out in that certificate. If Transnet does not issue a valid Tax Invoice to the Supplier for Non-compliance Penalties accrued during any relevant period, those Non-compliance Penalties shall be carried forward to the next period.

g) The Supplier shall pay the amount due within 10 (ten) days after receipt of a valid Tax Invoice from Transnet, failing which Transnet shall, without prejudice to any other rights of Transnet under this Agreement, be entitled to call for payment which may be in any form Transnet deems reasonable and/or appropriate.

h) Should the Supplier fail to pay any Non Compliance Penalties within the time indicated above (as applicable), Transnet shall be entitled to deduct (set off) the amount not paid by the Supplier from the account of the Supplier in the ensuing month.

i) The Non Compliance Penalties set forth in this Clause are stated exclusive of VAT. Any VAT payable on Non Compliance Penalties will be for the account of the Supplier .

13.3 **Non-compliance penalties for Job Creation**

a) Breach of job creation obligations provides Transnet cause to terminate the contract in certain cases where there is a material Non-compliance.

b) If the Supplier fails to achieve its job creation commitments as per their bid submission ("a **Non-Compliance**"), the Supplier shall pay a Non-Compliance penalty ("Non-compliance Penalty") to Transnet in respect of such Non-compliance.

c) Such penalty shall be calculated based on the difference between the committed and delivered jobs. For every job not created, a penalty of 2% of the contract value will be applied.

Non-compliance Penalty Certificate:

d) If any Non-compliance Penalty arises, the Supplier Development Manager shall issue a Non-compliance Penalty Certificate 90 business days before the expiry of the contract indicating the Non-compliance Penalties which have accrued during that period.

e) A Non-compliance Penalty Certificate shall be prima facie proof of the matters to which it relates. If the Supplier disputes any of the amounts set out in a Non-compliance Penalty Certificate:

- the dispute shall be resolved in accordance with the provisions of the Agreement; and
- if pursuant to that referral, it is determined that the Supplier owes any amount to Transnet pursuant to the Non-compliance Penalty Certificate, then the Supplier shall pay such amount to Transnet within 10 (ten) Business Days of the determination made pursuant to such determination and an accompanying valid Tax Invoice.

Payment of Non-compliance Penalties:

f) Subject to Clause (e) above, the Supplier shall pay the Non-compliance Penalty indicated in the Non-compliance Penalty Certificate within 10 (ten) Business Days of Transnet issuing a valid Tax Invoice to the Supplier for the amount set out in that certificate. If Transnet does not issue a valid Tax Invoice to the Supplier for Non-compliance Penalties accrued during any relevant period, those Non-compliance Penalties shall be carried forward to the next period.

g) The Supplier shall pay the amount due within 10 (ten) days after receipt of a valid Tax Invoice from Transnet, failing which Transnet shall, without prejudice to any other rights of Transnet under this Agreement, be entitled to call for payment which may be in any form Transnet deems reasonable and/or appropriate.

h) Should the Supplier fail to pay any Non Compliance Penalties within the time indicated above (as applicable), Transnet shall be entitled to deduct (set off) the amount not paid by the Supplier from the account of the Supplier in the ensuing month.

The Non Compliance Penalties set forth in this Clause are stated exclusive of VAT. Any VAT payable on Non Compliance Penalties will be for the account of the Supplier .

14 INVOICES AND PAYMENT

14.1 Transnet shall pay the Supplier the amounts stipulated in each Purchase Order/Work Order, subject to the terms and conditions of this Agreement.

14.2 Transnet shall pay such amounts to the Supplier upon receipt of a valid and undisputed Tax Invoice together with the supporting documentation, as specified in the Schedule of Requirements appended hereto, once the valid and undisputed Tax Invoices or such portions of the Tax Invoices which are valid and undisputed become due and payable to the Supplier for the delivery of the Goods ordered, in terms of clause 14.5 below.

14.3 Transnet may, pending an investigation, withhold any payments to the Supplier , in the case where irregular expenditure has been identified in the particular contract and that there is reasonable suspicion that the Supplier is involved or was aware that the contract transgressed any legislation.

14.4 All Prices set out in this Agreement and the Schedule of Requirements hereto are to be indicated inclusive and exclusive of VAT, which will be payable at the applicable rate in ZAR.

14.5 Unless otherwise provided for in the Schedule of Requirements appended to this Agreement, Tax Invoices shall be submitted together with a month-end statement. Payment against such month-end statement shall be made by Transnet within 30 [thirty] calendar days after date of receipt by

Transnet of the Supplier statement together with the relevant valid and undisputed Tax Invoice(s) and supporting documentation.

14.6 Where the payment of any Tax Invoice, or any part of a Tax Invoice which is not in dispute, is not made in accordance with this clause, the Supplier shall be entitled to charge interest on the outstanding amount, at The Standard Bank of South Africa's prime rate of interest in force, for the period from the due date of payment until the outstanding amount is paid.

14.7 The Supplier shall remain the owner of all plant, material, machinery, equipment and the like [collectively, **the Supplier's Goods**] provided to Transnet until Transnet has paid in full for the Supplier's Goods, it being specifically agreed that Transnet shall acquire no rights [including liens] of whatsoever nature in such Supplier's Goods until date of final payment by Transnet. Subject to the aforegoing, all risk and benefit to the Supplier's Goods shall pass from the Supplier to Transnet on delivery of the Supplier's Goods by the Supplier to Transnet.

15 PRICE ADJUSTMENTS

15.1 Prices for Goods supplied in terms of this Agreement shall be subject to review as indicated in the Schedule of Requirements/Works Order annexed hereto.

15.2 No less than 2 [two] months prior to any proposed Price adjustment, the Parties shall commence negotiations for Prices for the next period or as otherwise indicated in Schedule 1 hereto. The Parties shall have regard for market-related pricing of equivalent goods, continuous improvement initiatives, costs [including labour, raw materials and transport/delivery], order size and frequency and changes to the specification of the Goods.

15.3 Pursuant to clause 15.2 above, the Supplier shall keep full and accurate records of all costs associated with the supply of the Goods to Transnet, in a form to be approved in writing by Transnet. The Supplier shall produce such records to Transnet for inspection at all reasonable times on request and such records may, at Transnet's option, be audited by Transnet or its designated representatives.

15.4 Should Transnet and the Supplier fail to reach an agreement on Price for the successive period, either Party shall be entitled to submit this matter to dispute resolution in accordance with clause 39 of the Master Agreement [Dispute Resolution].

15.5 If during the period of this Agreement Transnet can purchase similar Goods of a like quality from another supplier at a total delivered cost to a Transnet facility that is lower than the total delivered cost of the Goods purchased hereunder from the Supplier, Transnet may notify the Supplier of such total delivered cost and the Supplier shall have an opportunity to adjust the Price of the Goods purchased hereunder, on such a basis as to result in the same total delivered cost to Transnet, within 30 [thirty] calendar days of such notice. If the Supplier fails to do so or cannot legally do so, Transnet may (i) purchase the Goods from such other supplier in which case the obligations, including, but not limited to, any purchase and sale requirements and/or commitments, if any, of Transnet and the Supplier hereunder shall be reduced accordingly; (ii) terminate this Agreement without any penalty, liability or further obligation; or (iii) continue purchases under this Agreement.

15.6 If during the period of this Agreement the Supplier sells any materials which are the same as, equivalent to, or substantially similar to the Goods herein, at a total delivered cost to a third party lower than the total delivered cost to a Transnet facility, then the Supplier has an opportunity to

adjust its Price for the Goods purchased hereunder within 30 [thirty] calendar days so that the Price is the same or lower than the total delivered cost of such third party. If the Supplier fails to do so or cannot legally do so, Transnet may (i) purchase the Goods from any other such supplier, in which case the obligations, including, but not limited to, any purchase and sale requirements and/or commitments, if any, of Transnet and the Supplier hereunder shall be reduced accordingly; or (ii) terminate this Agreement without any penalty, liability or further obligation. Within 30 [thirty] calendar days of the Commencement Date of this Agreement or at any time Transnet so requests, the Supplier shall certify in writing to Transnet that it is in compliance with this clause and shall provide all information that Transnet reasonably requests in order to verify such compliance.

16 WARRANTIES APPLICABLE TO GOODS

The Supplier warrants that:

16.1 pursuant to clause 9.3 [General Obligations of the Supplier], the Goods will be manufactured in accordance with the specifications appended hereto at Schedule 1, or the manufacturer's specifications, as agreed in writing by both Parties;

16.2 the execution and performance of this Agreement by the Supplier does not infringe any rights of a third party or breach any obligation of the Supplier to any third party; and

16.3 it has taken all reasonable precautions to ensure that, in the event of a disaster, the impact of such disaster on the ability of the Supplier to comply with its obligations under this Agreement will be reduced to the greatest extent possible, and that the Supplier shall ensure that it has appropriate, tested and documented recovery arrangements in place.

17 THIRD PARTY INDEMNITY

The Supplier hereby indemnifies and shall hold Transnet harmless against any direct damages suffered by or claims arising against Transnet in respect of clause 16.2 above.

18 INSPECTION APPLICABLE TO GOODS

18.1 Transnet reserves the right to arrange for the inspection of all Goods forming the subject of any Purchase Order, at any stage before final acceptance and by any means it may think fit, and when such inspection is to be carried out, the relevant Purchase Order(s) shall be endorsed accordingly.

18.2 When inspection at the Supplier's works or warehouse is specified, Transnet's authorised inspector shall have free access to the premises of the Supplier at all times during working hours on a Business Day; shall have liberty to inspect work which is the subject of the Purchase Order at any stage of manufacture, and may reject any Goods which are found to be incomplete, defective or in any way not in conformity with the terms and specifications of this Agreement; and the Supplier shall afford all reasonable facilities for such access and inspection.

18.3 The Supplier shall provide inspection gauges, measuring and test equipment to ensure that the requirements of this Agreement are satisfied. All gauges, templates, tools and other equipment required to check the accuracy of the work shall be calibrated at regular and reasonable intervals by

a laboratory which has been approved in writing by Transnet. This certificate shall not be more than 12 [twelve] months old.

18.4 The Supplier shall prepare and supply, without charge to Transnet, all test pieces, samples and specimens; shall provide all labour and apparatus for carrying out tests and analyses in accordance with the terms of this Agreement or Purchase Order, and render all reasonable assistance in making such tests and analyses.

18.5 All special rules governing gauging, testing, analysis and other inspection procedures shall be adhered to strictly in accordance with the terms of this Agreement or Purchase Order and the conditions of any specifications and drawings quoted therein.

18.6 Inspection will be arranged by the Staff of Transnet, as indicated in the Purchase Order(s).

18.7 When Goods are ready for inspection, the Supplier shall apply promptly to the appropriate authority for instructions regarding such inspection. All applications for inspection shall quote Transnet's Agreement or Purchase Order number. 7 [seven] Business Days' notice of readiness from the Supplier shall be given to the authorised inspector appointed by Transnet to carry out such inspection.

18.8 Transnet shall have the right to recover from the Supplier the cost of inspection of any Goods that have been rejected by its authorised inspector in terms of this clause 18.

19 DEFECTIVE GOODS

19.1 Notwithstanding any certificate and/or receipt that may have been issued by or on behalf of Transnet either in South Africa or overseas, Goods will be accepted at the place of delivery or at the port of shipment, as specified in this Agreement, only as regards outward condition of packages and Transnet retains the right to reject the Goods supplied, on or after arrival at the place to which they are consigned, or after they have been placed in use in South Africa, should they be found defective.

19.2 If Goods are rejected owing to latent defects becoming apparent during machining operations or other preparation necessary on the part of Transnet before they can be put into use, the Supplier shall bear all expenses incurred by Transnet in carrying out such necessary operations.

19.3 If such Goods are rejected, the Supplier will pay the following costs:

a) for Goods purchased in South Africa on an ex works basis, the cost of transport from the Supplier's works in South Africa to the named destination where the Goods have been rejected by Transnet, plus handling charges and storage, if leviable; or

b) for Goods manufactured overseas, the Supplier shall pay all replacement costs including the overseas inland transport cost, freight and insurance charges incurred plus railage or other inland transport costs from the South African port to the place where the Goods have been rejected by Transnet, including handling charges, storage, landing charges, customs duty and surcharges, if leviable.

19.4 If Transnet requires rejected Goods to be replaced, the Supplier shall, when called upon to do so, arrange prompt replacement of the Goods within the prescribed manufacturing lead times for such Goods, as indicated in Schedule 1.

19.5 If Goods are found to be defective but the defects are, in the opinion of Transnet, not of so serious a nature as to warrant total rejection of the Goods, the Supplier shall, when called upon to do so, remedy or make good such defects at its own cost, or Transnet may remedy or make good such defects at the request of the Supplier and recover from the Supplier all costs or expenses reasonably incurred by it in doing so.

19.6 Should the Supplier fail, when called upon to remedy or make good such defects within a reasonable time or to request Transnet to do so, Transnet may proceed to remedy or make good such defects and thereafter recover from the Supplier all such costs and expenses as aforementioned.

19.7 Any amount recoverable from the Supplier in terms of this clause may, without prejudice to any other legal remedies available to Transnet, be deducted in whole or in part from any monies in the hands of Transnet which are due for payment to the Supplier.

20 TOTAL OR PARTIAL FAILURE TO PERFORM

20.1 In the case of Goods to be specially manufactured for it, if Transnet at any time ascertains that:

a) no manufacturing of the Goods specified in a Purchase Order has commenced and there is little or no prospect, in Transnet's opinion, that manufacturing will commence within a reasonable time; or

b) delivery of any of the Goods is being or is likely to be delayed beyond the promised delivery date(s), and there is little or no prospect of the Purchase Order(s) being carried out within reasonable adherence to the promised delivery rate(s) or time(s),

then Transnet may, irrespective of the cause of the delay, by notice to the Supplier, cancel as from a future date specified in such notice the whole or any part of this Agreement or Purchase Order in respect of which the Goods to be supplied have not been completed by that date, without incurring any liability by reason of such cancellation except as provided in this clause.

20.2 The Supplier shall thereupon, as soon as possible after such date, deliver to Transnet the Goods [if any] already completed, and payment for the part performance shall be made on a pro rata basis, provided the uncompleted part is not an integral or essential part of the completed Goods. Where an integral or essential part of the work has not been completed, the amount to be paid to the Supplier will be calculated on the basis of Transnet's enrichment. The Supplier shall, wherever practicable, supply Transnet with the necessary drawings and/or specifications to enable it to complete the work.

20.3 Whenever, in any case not covered by clause 20.1 above, the Supplier fails or neglects to execute the work or to deliver any portion of the Goods as required by the terms of this Agreement or Purchase Order, or if any Goods are rejected on any of the grounds mentioned in clause 19 [Defective Goods], Transnet may cancel this Agreement or Purchase Order in so far as it relates to the unexecuted work or the undelivered or rejected portion of the Goods, and in such event, the supply of the remaining portion shall remain subject in all respects to these conditions.

21 NON CONFORMANCE OF GOODS PROCURED

21.1 In the case of Goods manufactured for and procured by Transnet from the Supplier in terms of this Agreement, being found not to conform to the Transnet standards, specifications and requirements, Transnet at any time may be entitled to raise a Non Conformance Report (NCR) against a Supplier

whose Goods do not conform to Transnet standards, specifications and requirements directing the Supplier to investigate and remedy the non-conformance within the stipulated time frame as may be determined by Transnet at its discretion.

21.2 Failure by the Supplier to fully comply with NCR within the period stated in sub-clause 21.1 above, shall entitle Transnet to further conditions to which the Supplier must discharge in order to close the NCR or to terminate the order without giving the Supplier written notice of termination in terms of this Agreement.

22 RIGHTS ON CANCELLATION

22.1 If this Agreement or Purchase Order is cancelled in whole or in part in terms of clause 200 *[Total or Partial Failure to Perform]*, Transnet may execute or complete this Agreement with any other entity and do so on such terms as it may deem proper, or may procure other comparable Goods in substitution for those neglected to be manufactured or supplied or rejected as aforesaid, and may recover from the Supplier the difference between the cost of such Goods and the Price [if the latter was lower] as well as any costs and expenses [including any additional transport costs] which Transnet may have had to incur in consequence of the Supplier default.

22.2 Any amount which may be recoverable from the Supplier in terms of clause 22.1 above, without prejudice to any other legal remedies available to Transnet, may be deducted in whole or in part from any monies in the hands of Transnet and due for payment to the Supplier .

23 BREACH AND TERMINATION

23.1 Termination in accordance with clause 6 [Term and Cancellation] shall not prejudice or affect any right of action or remedy which shall have accrued or shall thereafter accrue to either Party and all provisions which are to survive this Agreement or impliedly do so shall remain in force and in effect.

23.2 On termination of this Agreement or a Work Order, the Service Provider will immediately deliver up, and procure that its Personnel will immediately deliver up to Transnet, all Deliverables and property belonging to Transnet [or, in the event of termination of a Work Order, such as is relevant to that Work Order] which may be in the possession of, or under the control of the Service Provider, and certify to Transnet in writing that this has been done.

23.3 To the extent that any of the Deliverables and property referred to in clause 23.2 above are in electronic form and contained on non-detachable storage devices, the Service Provider will provide Transnet with unencrypted copies of the same on magnetic media and will irretrievably destroy and delete copies so held.

23.4 In the event that this Agreement is terminated by the Service Provider under clause **Error! Reference source not found.** [Term and Cancellation], or in the event that a Work Order is terminated by Transnet under clause 23.8 [Breach and Consequences of Termination], Transnet will pay to the Service Provider all outstanding Fees [apportioned on a pro rata basis] relating to the work undertaken by the Service Provider up until the date of such termination. Transnet will also pay the costs of any goods and materials ordered by the Service Provider in relation to the such work for which the Service Provider has paid or is legally obliged to pay, in which case, on delivery of such goods or materials, the Service Provider will promptly deliver such goods and materials to Transnet or as it may direct.

23.5 If either Party [**the Defaulting Party**] commits a material breach of this Agreement and fails to remedy such breach within 30 [thirty] calendar days of written notice thereof, the other Party [hereinafter **the Aggrieved Party**], shall be entitled, in addition to any other rights and remedies that it may have in terms of this Agreement, to terminate this Agreement forthwith without any liability and without prejudice to any claims which the Aggrieved Party may have for damages against the Defaulting Party.

23.6 Either Party may terminate this Agreement forthwith by notice in writing to the other Party when the other Party is unable to pay its debts as they fall due or commits any act or omission which would be an act of insolvency in terms of the Insolvency Act, 24 of 1936 [as amended from time to time], or if any action, application or proceeding is made with regard to it for:

a) a voluntary arrangement or composition or reconstruction of its debts;

b) its winding-up or dissolution;

c) the appointment of a liquidator, trustee, receiver, administrative receiver or similar officer;

d) any similar action, application or proceeding in any jurisdiction to which it is subject.

23.7 Transnet may terminate this Agreement at any time within 2 [two] months of becoming aware of a change of control of the Supplier by notice in writing to the Supplier . For the purposes of this clause, **control** means the right to direct the affairs of a company whether by ownership of shares, membership of the board of directors, agreement or otherwise.

23.8 Notwithstanding this clause 239, Transnet may cancel this Agreementwithout cause by giving 30 [thirty] calendar days prior written notice thereof to the Supplier , or

23.9 The provisions of clauses 2 *[Definitions]*, 162 *[Warranties]*, 222 *[Rights on Cancellation]*, 27 *[Confidentiality]*, 29 *[Limitation of Liability]*, 30 *[Intellectual Property Rights]*, 333 *[Dispute Resolution]* and 37.1 *[Governing Law]* shall survive termination or expiry of this Agreement.

24 CESSIONS AND ASSIGNMENTS AS PER NT INSTRUCTION NOTE 08 OF 2022/2023

24.1 The Supplier is not allowed to cede its rights for payment in terms of this Agreement without prior written approval from Transnet. Cession shall only be applicable as follows:

a) Cession must only be applicable to the transfer of right to payment for Goods delivered/rendered by a Supplier to an FSP or State Institutions;

b) The written request for cession must be by the Supplier and not a third party; and

c) The written request by the Supplier must be accompanied by the cession agreement.

24.2 The Supplier is prohibited from transferring its rights and obligations to perform under this contract. Assignments are against the principles of section 217 of the Constitution mainly, fairness, transparency and competitiveness.

25 FORCE MAJEURE

25.1 Neither Party shall have any claim against the other Party arising from any failure or delay in the performance of any obligation of either Party under this Agreement caused by an act of force majeure such as acts of God, fire, flood, war, lockout, government action, laws or regulations, terrorism or civil disturbance, defaults or other circumstances or factors beyond the reasonable control of either Party, and to the extent that the performance of obligations of either Party hereunder is delayed by virtue of the aforegoing, any period stipulated for any such performance

shall be reasonably extended. Transnet may however rely on strikes, industrial dispute and riots as a ground of force majeure.

25.2 Each Party will take all reasonable steps by whatever lawful means that are available to resume full performance as soon as practicable and will seek agreement to modification of the relevant provisions of this Agreement in order to accommodate the new circumstances caused by the act of *force majeure*. If a Party fails to agree with such modifications proposed by the other Party within 90 [ninety] calendar days of the act of *force majeure* first occurring, either Party may thereafter terminate this Agreement with immediate notice.

26 PROTECTION OF PERSONAL INFORMATION

a) The following terms shall bear the same meaning as contemplated in Section 1 of the Protection of Personal Information Act 4 of 2013 ("POPIA"):

consent; person; personal information; processing; record; Regulator as well as any terms derived from these terms of the POPIA

b) Transnet will process all information by the Respondent in terms of the requirements contemplated in Section 4(1) of the POPIA:

Accountability; Processing limitation; Purpose specification; Further processing limitation; Information quality; Openness; Security safeguards and Data subject participation.

c) Transnet agrees that in submitting any information or documentation requested in the RFP and in this Agreement, the Supplier consents to the processing of their personal information for the purpose of, but not limited to, risk assessment, contract award, contract management, auditing, legal opinions/litigation, investigations (if applicable), document storage for the legislatively required period, destruction, de-identification and publishing of personal information by Transnet and/or its authorised appointed third parties.

d) The Parties agree that they may obtain and have access to personal information for the fulfilment of the rights and obligations contained herein. In performing the obligations as set out in this Agreement, the Parties shall at all times ensure that:

i. they process personal information only for the express purpose for which it was obtained;

ii. once processed for the purposes for which it was obtained, all personal information will be destroyed to an extent that it cannot be reconstructed to its original form, subject to any legal retention requirements;

iii. Personal information is provided only to authorised personnel who strictly require the personal information to carry out the Parties' respective obligations under this Agreement;

iv. they do not disclose personal information of the other Party, other than in terms of this Agreement;

v. they have all reasonable technical and organisational measures in place to protect all personal information from unauthorised access and/or use;

vi. they have appropriate technical and organisational measures in place to safeguard the security, integrity and authenticity of all information in their possession or under their control in terms of this Agreement;

vii. they identify all reasonably foreseeable internal and external risks to personal information in their possession or under their control; establish and maintain appropriate safeguards against the risks identified; regularly verify that the safeguards are effectively implemented; and ensure that the safeguards are continually updated in response to new risks or deficiencies in previously implemented safeguards;

viii. such personal information is protected against unauthorised or unlawful processing, accidental loss, destruction or damage, alteration, disclosure or access.

26.1 The Parties agree that if personal information will be processed for additional purposes beyond the original purpose for which it was obtained, explicit consent must be obtained beforehand from those persons whose information will be subject to such processing.

26.2 Should it be necessary for either Party to disclose or otherwise make available the personal information to any third party (including sub-contractors and employees) that is not already consented to, it may do so only with the prior written consent of the other Party. The Party requiring such consent shall require of all such third parties, appropriate written undertakings to be provided, containing similar terms to that set forth in this clause, and dealing with that third party's obligations in respect of its processing of the personal information. Following approval by the other Party, the Party requiring consent agrees that the provisions of this clause shall *mutatis mutandis* apply to all authorised third parties who process personal information.

26.3 The Parties shall ensure that any persons authorized to process information on their behalf (including employees and third parties) will safeguard the security, integrity and authenticity of all information. Where necessary to meet this requirement, the Parties shall keep all personal information and any analyses, profiles, or documents derived therefrom logically separated from all other information and documentation held by it.

26.4 The Parties shall carry out regular assessments to identify all reasonably foreseeable internal and external risks to the personal information in its possession or under its control. The Parties shall implement and maintain appropriate safeguards against the risks which it identifies and shall also regularly verify that the safeguards which it has in place have been effectively implemented.

26.5 The Parties agree that they will promptly return, destroy or de-identify any personal information in their possession or control which belongs to the other Party once it no longer serves the purpose for which it was collected in relation to this Agreement, subject to any legal retention requirements. This may be at the request of the other Party and includes circumstances where a person has requested the Parties to delete all instances of their personal information. The information will be destroyed or de-identified in such a manner that it cannot be reconstructed to its original form, linking it to any particular individual or organisation.

26.6 Personal Information security breach:

a) Each Party shall notify the other party in writing as soon as possible after it becomes aware of or suspects any loss, unauthorised access or unlawful use of any personal information and shall, at its own cost, take all necessary remedial steps to mitigate the extent of the loss or compromise of personal information and to restore the integrity of the affected personal information as quickly as is possible. The Parties shall also be required to provide each other with details of the persons affected by the compromise and the nature and extent of the

compromise, including details of the identity of the unauthorised person who may have accessed or acquired the personal information.

b) The Parties shall provide on-going updates on the progress in resolving the compromise at reasonable intervals until such time as the compromise is resolved.

c) Where required, the Parties must notify the South African Police Service; and/or the State Security Agency and the Information Regulator and the affected persons of the security breach. Any such notification shall always include sufficient information to allow the persons to take protective measures against the potential consequences of the compromise.

d) The Parties undertake to co-operate in any investigations relating to security which is carried out by or on behalf of the other including providing any information or material in its possession or control and implementing new security measures.

27 CONFIDENTIALITY

27.1 The Parties hereby undertake the following with regard to Confidential Information:

a) not to divulge or disclose to any person whomsoever in any form or manner whatsoever, either directly or indirectly, any Confidential Information of the other without the prior written consent of such other Party, other than when called upon to do so in accordance with a statute, or by a court having jurisdiction, or by any other duly authorised and empowered authority or official, in which event the Party concerned shall do what is reasonably possible to inform the other of such a demand and each shall assist the other in seeking appropriate relief or the instituting of a defensive action to protect the Confidential Information concerned;

b) not to use, exploit, permit the use of, directly or indirectly, or in any other manner whatsoever apply the Confidential Information disclosed to it as a result of this Agreement, for any purpose whatsoever other than for the purpose for which it is disclosed or otherwise than in strict compliance with the provisions in this Agreement;

c) not to make any notes, sketches, drawings, photographs or copies of any kind of any part of the disclosed Confidential Information without the prior written consent of such other Party, except when reasonably necessary for the purpose of this Agreement, in which case such copies shall be regarded as Confidential Information;

d) not to de-compile, disassemble or reverse engineer any composition, compilation, concept application, item, component de-compilation, including software or hardware disclosed and shall not analyse any sample provided by Transnet, or otherwise determine the composition or structure or cause to permit these tasks to be carried out except in the performance of its obligations pursuant to this Agreement;

e) not to exercise less care to safeguard Transnet Confidential Information than the Party exercises in safeguarding its own competitive, sensitive or Confidential Information;

f) Confidential Information disclosed by either Party to the other or by either Party to any other party used by such party in the performance of this Agreement, shall be dealt with as "restricted" or shall be dealt with according to any other appropriate level of confidentiality relevant to the nature of the information concerned, agreed between the Parties concerned and stipulated in writing for such information in such cases;

g) the Parties shall not make or permit to be made by any other person subject to their control, any public statements or issue press releases or disclose Confidential Information with regard to any matter related to this Agreement, unless written authorisation to do so has first been obtained from the Party first disclosing such information;

h) each Party shall be entitled to disclose such aspects of Confidential Information as may be relevant to one or more technically qualified employees or consultants of the Party who are required in the course of their duties to receive the Confidential Information for the Permitted Purpose provided that the employee or consultant concerned has a legitimate interest therein, and then only to the extent necessary for the Permitted Purpose, and is informed by the Party of the confidential nature of the Confidential Information and the obligations of the confidentiality to which such disclosure is subject and the Party shall ensure such employees or consultants honour such obligations;

i) each Party shall notify the other Party of the name of each person or entity to whom any Confidential Information has been disclosed as soon as practicable after such disclosure;

j) each Party shall ensure that any person or entity to which it discloses Confidential Information shall observe and perform all of the covenants the Party has accepted in this Agreement as if such person or entity has signed this Agreement. The Party disclosing the Confidential Information shall be responsible for any breach of the provisions of this Agreement by such person or entity; and

k) each Party may by written notice to the other Party specify which of the Party's employees, officers or agents are required to sign a non-disclosure undertaking.

27.2 The duties and obligations with regard to Confidential Information in this clause 29 shall not apply where:

a) a Party can demonstrate that such information is already in the public domain or becomes available to the public through no breach of this Agreement by that Party, or its Staff; or

b) was rightfully in a Party's possession prior to receipt from the other Party, as proven by the first-mentioned Party's written records, without an infringement of an obligation or duty of confidentiality; or

c) can be proved to have been rightfully received by a Party from a third party without a breach of a duty or obligation of confidentiality; or

d) is independently developed by a Party as proven by its written records.

27.3 This clause 273 shall survive termination for any reason of this Agreement and shall remain in force and effect from the Commencement Date of this Agreement and 5 [five] years after the termination of this Agreement. Upon termination of this Agreement, all documentation furnished to the Supplier by Transnet pursuant to this Agreement shall be returned to Transnet including, without limitation, all corporate identity equipment including dyes, blocks, labels, advertising matter, printing matter and the like.

28 INSURANCES

28.1 Without limiting the liability of the Supplier under this Agreement, the Supplier shall take out insurance in respect of all risks for which it is prudent for the Supplier to insure against, including any liability it may have as a result of its activities under this Agreement for theft, destruction, death

or injury to any person and damage to property. The level of insurance will be kept under review by Transnet, on an annual basis, to ensure its adequacy, provided that any variation to the level of such insurance shall be entirely at the discretion of the Supplier .

28.2 The Supplier shall arrange insurance with reputable insurers and will produce to Transnet evidence of the existence of the policies on an annual basis within 30 [thirty] calendar days after date of policy renewals.

28.3 Subject to clause 28.4 below, if the Supplier fails to effect adequate insurance under this clause 284, it shall notify Transnet in writing as soon as it becomes aware of the reduction or inadequate cover and Transnet may arrange or purchase such insurance on behalf of the Supplier . The Supplier shall promptly reimburse Transnet for any premiums paid provided such insurance protects the Supplier 's liability. Transnet assumes no responsibility for such insurance being adequate to protect all of the Supplier 's liability.

28.4 In the event that the Supplier receives written notice from its insurers advising of the termination of its insurance cover referred to in clause 28.1 above or if the insurance ceases to be available upon commercially reasonable terms, the Supplier shall immediately notify Transnet in writing of such termination and/or unavailability, whereafter either the Supplier or Transnet may terminate this Agreement on giving the other Party not less than 30 [thirty] calendar days prior written notice to that effect.

29 LIMITATION OF LIABILITY

29.1 The Supplier 's liability under this clause 29 shall be in addition to any warranty or condition of any kind, express or implied by law or otherwise, relating to the Goods or ancillary Services, including the quality of the Goods or ancillary Services or any materials delivered pursuant to this Agreement.

29.2 Neither Party excludes or limits liability to the other Party for:

a) death or personal injury caused by its negligence, [including its employees', agents' or Subcontractors' negligence]; or

b) fraud or theft.

29.3 The Supplier shall indemnify and keep Transnet indemnified from and against liability for damage to any Transnet property [whether tangible or intangible] or any other loss, costs or damage suffered by Transnet to the extent that it results from any act of or omission by the Supplier or its Personnel in connection with this Agreement. The Supplier 's liability arising out of this clause 29.3 shall be limited to direct damages.

29.4 Subject always to clauses 29.1 and 29.2 above, the liability of either the Supplier or Transnet under or in connection with this Agreement, whether for negligence, misrepresentation, breach of contract or otherwise, for direct loss or damage arising out of each Default or series of related Defaults shall not exceed 100% [one hundred per cent] of the Fees paid under the schedule or Work Order to which the Default(s) relates.

29.5 Subject to clauses 29.1 to 29.4 above, in no event shall either Party be liable to the other for indirect or consequential loss or damage or including indirect or consequential loss of profits, business, revenue, goodwill or anticipated savings of an indirect nature or loss or damage incurred by the other Party as a result of third party claims.

29.6 If for any reason the exclusion of liability in clause 29.5 above is void or unenforceable, either Party's total liability for all loss or damage under this Agreement shall be as provided in clause 29.3 above.

29.7 Nothing in this clause 29 shall be taken as limiting the liability of the Parties in respect of clauses 27 *[Confidentiality]* and 300 *[Intellectual Property Rights]*.

30 INTELLECTUAL PROPERTY RIGHTS

30.1 **Title to Confidential Information**

a) Transnet will retain all right, title and interest in and to its Confidential Information and Background Intellectual Property and the Supplier acknowledges that it has no claim of any nature in and to the Confidential Information and Background Intellectual Property that is proprietary to Transnet. For the avoidance of doubt all the Supplier 's Background Intellectual Property shall remain vested in the Supplier .

b) Transnet shall grant to the Supplier an irrevocable, royalty free, non-exclusive licence to use Transnet's Background Intellectual Property only for the Permitted Purpose. This licence shall not permit the Supplier to sub-license to other parties.

c) The Supplier shall grant to Transnet an irrevocable, royalty free, non-exclusive licence to use the Supplier 's Background Intellectual Property for the Permitted Purpose. This licence shall not permit Transnet to sub-license to other parties.

d) The Supplier shall grant Transnet access to the Supplier 's Background Intellectual Property on terms which shall be *bona fide* negotiated between the Parties for the purpose of commercially exploiting the Foreground Intellectual Property, to the extent that such access is required.

e) The above shall not pertain to any software licenses procured by the Supplier from third parties and used in the supply of the Goods.

30.2 **Title to Intellectual Property**

a) All right, title and interest in and to Foreground Intellectual Property prepared, conceived or developed by the Supplier , its researchers, agents and employees shall vest in Transnet and the Supplier acknowledges that it has no claim of any nature in and to the Foreground Intellectual Property. The Supplier shall not at any time during or after the termination or cancellation of this Agreement dispute the validity or enforceability of such Foreground Intellectual Property, or cause to be done any act or anything contesting or in any way impairing or tending to impair any part of that right, title and interest to any of the Foreground Intellectual Property and shall not counsel or assist any person to do so.

b) Transnet shall be entitled to seek protection in respect of the Foreground Intellectual Property anywhere in the world as it shall decide in its own absolute discretion and the Supplier shall reasonably assist Transnet in attaining and maintaining protection of the Foreground Intellectual Property.

c) Where the Foreground Intellectual Property was created by the Supplier or its researchers, agents and employees and where Transnet elects not to exercise its option to seek protection or decides to discontinue the financial support of the prosecution or maintenance of any such protection, Transnet shall notify the Supplier who shall have the right of first

refusal to file or continue prosecution or maintain any such applications and to maintain any protection issuing on the Foreground Intellectual Property.

d) No consideration shall be paid by Transnet to the Supplier for the assignment of any Foreground Intellectual Property from the Supplier to Transnet, over and above the sums payable in terms of this Agreement. The Supplier undertakes to sign all documents and do all things as may be necessary to effect, record and perfect the assignment of the Foreground Intellectual Property to Transnet.

e) Subject to anything contrary contained in this Agreement and/or the prior written consent of Transnet [which consent shall not be unreasonably be withheld], the Supplier shall under no circumstances be entitled as of right, or to claim the right, to use Transnet's Background Intellectual Property and/or Foreground Intellectual Property.

30.3 **Title to Improvements**

Any improvements, developments, adaptations and/or modifications to the Foreground Intellectual Property, and any and all new inventions or discoveries, based on or resulting from the use of Transnet's Background Intellectual Property and/or Confidential Information shall be exclusively owned by Transnet. The Supplier shall disclose promptly to Transnet all such improvements, developments, adaptations and/or modifications, inventions or discoveries. The Supplier hereby undertakes to sign all documents and do all things as may be necessary to effect, record and perfect the assignment of such improvements, developments, adaptations and/or modifications, inventions or discoveries to Transnet and the Supplier shall reasonably assist Transnet in attaining, maintaining or documenting ownership and/or protection of the improved Foreground Intellectual Property.

30.4 **Unauthorised Use of Confidential Information**

The Supplier shall not authorise any party to act on or use in any way any Confidential Information belonging to Transnet whether or not such party is aware of such Confidential Information, and shall promptly notify Transnet of the information if it becomes aware of any party so acting, and shall provide Transnet the information with such assistance as Transnet reasonably requires, at Transnet's cost and expense, to prevent such third party from so acting.

30.5 **Unauthorised Use of Intellectual Property**

a) The Supplier agrees to notify Transnet in writing of any conflicting uses of, and applications of registrations of Patents, Designs and Trade Marks or any act of infringement, unfair competition or passing off involving the Intellectual Property of Transnet of which the Supplier acquires knowledge and Transnet shall have the right, as its own option, to proceed against any party infringing its Intellectual Property.

b) It shall be within the sole and absolute discretion of Transnet to determine what steps shall be taken against the infringer and the Supplier shall co-operate fully with Transnet, at Transnet's cost, in whatever measure including legal action to bring any infringement of illegal use to an end.

c) The Supplier shall cooperate to provide Transnet promptly with all relevant ascertainable facts.

d) If proceedings are commenced by Transnet alone, Transnet shall be responsible for all expenses but shall be entitled to all damages or other awards arising out of such

proceedings. If proceedings are commenced by both Parties, both Parties will be responsible for the expenses and both Parties shall be entitled to damages or other awards arising out of proceedings.

31 NON-WAIVER

31.1 Failure or neglect by either Party, at any time, to enforce any of the provisions of this Agreement, shall not in any manner be construed to be a waiver of any of that Party's rights in that regard and in terms of this Agreement.

31.2 Such failure or neglect shall not in any manner affect the continued, unaltered validity of this Agreement, or prejudice the right of that Party to institute subsequent action.

32 PARTIAL INVALIDITY

If any provision of this Agreement shall be held to be invalid, illegal or unenforceable, or shall be required to be modified, the validity, legality and enforceability of the remaining provisions shall not be affected thereby.

33 DISPUTE RESOLUTION

33.1 Should any dispute of whatsoever nature arise between the Parties concerning this Agreement, the Parties shall try to resolve the dispute by negotiation within 10 [ten] Business Days of such dispute arising.

33.2 If the dispute has not been resolved by such negotiation, either of the Parties may refer the dispute to AFSA and notify the other Party accordingly, which proceedings shall be held in Johannesburg.

33.3 Such dispute shall be finally resolved in accordance with the rules of AFSA by an arbitrator or arbitrators appointed by AFSA.

33.4 This clause constitutes an irrevocable consent by the Parties to any proceedings in terms hereof, and neither of the Parties shall be entitled to withdraw from the provisions of this clause or claim at any such proceedings that it is not bound by this clause 33.

33.5 This clause 333 is severable from the rest of this Agreement and shall remain in effect even if this Agreement is terminated for any reason.

33.6 This clause 333 shall not preclude either Party from seeking urgent relief in a court of appropriate jurisdiction, where grounds for urgency exist.

34 ADDRESSES FOR NOTICES

34.1 The Parties to this Agreement select the physical addresses and fax numbers, as detailed hereafter, as their respective addresses for giving or sending any notice provided for or required in terms of this Agreement, provided that either Party shall be entitled to substitute such other address or fax number, as may be, by written notice to the other:

a) **Transnet**

(i)	For legal notices:	Transnet Freight Rail
(ii)		15 Girton Road
		Inyanda House 2
		Park Town Johannesburg

Johannesburg

Attention: Legal Department

(iii) For commercial notices: Transnet Freight Rail

Inyanda House 2

15 Girton Road

Park Town

Johannesburg

Attention:

b) **The Supplier**

(i) For legal notices:

(ii) For commercial notices: ……

……

……

Fax No. ……

Attention: ……

34.2 Any notice shall be addressed to a Party at its physical address, or delivered by hand, or sent by fax or email.

34.3 Any notice shall be deemed to have been given:

a) if hand delivered, on the day of delivery;

b) if faxed, on the date and time of sending of such fax, as evidenced by a fax confirmation printout, provided that such notice shall be confirmed by prepaid registered post on the date of dispatch of such fax, or, should no postal facilities be available on that date, on the next Business Day; or

c) if sent by email, on the date and time received, provided that such notice shall be confirmed by prepaid registered post on the date of dispatch of such email, or, should no postal facilities be available on that date, on the next Business Day.

35 WHOLE AND ONLY AGREEMENT

35.1 The Parties hereby confirm that this Agreement constitutes the whole and only agreement between them with regard to the subject matter of this Agreement.

35.2 The Parties hereby confirm that this Agreement replaces all other agreements which exist or may have existed in any form whatsoever between them, with regard to the subject matter dealt with in this Agreement, any annexures appended hereto and the Schedule of Requirements/Work Order.

36 AMENDMENT AND CHANGE CONTROL

36.1 Any amendment or change of any nature made to this Agreement and the Schedule of Requirements thereof shall only be valid if it is in writing, signed by both Parties and added to this Agreement as an addendum hereto. In this regard a Change Notice must first be defined and issued by the requesting Party. A Change Notice Response must then be issued by responding Party. A formal approval of the Change Request will then trigger the issue of the addendum to this Agreement.

36.2 In the event the Parties cannot agree upon changes, the Parties shall in good faith seek to agree any proposed changes using the dispute resolution procedures in clause 333 *[Dispute Resolution*].

37 GENERAL

37.1 **Governing Law**

This Agreement is exclusively governed by and construed in accordance with the laws of the Republic of South Africa and is subject to the jurisdiction of the courts of the Republic of South Africa.

37.2 **Change of Law**

In this Agreement, unless the context otherwise requires, references to a statutory provision include references to that statutory provision as from time to time amended, extended or re-enacted and any regulations made under it, provided that in the event that the amendment, extension or re-enactment of any statutory provision or introduction of any new statutory provision has a material impact on the obligations of either Party, the Parties will negotiate in good faith to agree such amendments to this Agreement as may be appropriate in the circumstances. If, within a reasonable period of time, the Supplier and Transnet cannot reach agreement on the nature of the changes required or on modification of Prices, delivery schedules, warranties, or other terms and conditions, either Party may seek to have the matter determined in accordance with clause 333 [*Dispute Resolution*] above.

37.3 **Counterparts**

This Agreement may be signed in any number of counterparts, all of which taken together shall constitute one and the same instrument. Either Party may enter into this Agreement by signing any such counterpart.

38 DATABASE OF RESTRICTED SUPPLIER

The process of restriction is used to exclude a company/person from conducting future business with Transnet and other organs of state for a specified period. No Bid shall be awarded to a Bidder whose name (or any of its members, directors, partners or trustees) appear on the Register of Tender Defaulters kept by National Treasury, or who have been placed on National Treasury's List of Restricted Suppliers. Transnet reserves the right to withdraw an award, or cancel a contract concluded with a Bidder should it be established, at any time, that a bidder has been restricted with National Treasury by another government institution.

Thus signed by the Parties and witnessed on the following dates and at the following places:

For and on behalf of **TRANSNET SOC LTD** duly authorised hereto	For and on behalf of **.....** duly authorised hereto
Name:	Name:
Position:	Position:
Signature:	Signature:
Date:	Date:
Place:	Place:

AS WITNESS: Name:	**AS WITNESS:** Name:
Signature:	Signature:

AS WITNESS: Name:	**AS WITNESS:** Name:
Signature:	Signature:

SCHEDULE 1 – SCHEDULE OF REQUIREMENTS

DESCRIPTION	**FOR THE PROVISION OF ALUMINOTHERMIC WELDING OF RAILWAY RAILS ON AN AS AND WHEN REQUIRED BASIS FOR A PERIOD OF SIX (06) MONTHS**
SERVICE PROVIDER	**……**
AGREEMENT NUMBER	**……**
DURATION	**SIX (06) MONTHS**
COMMENCEMENT DATE	**……**
EXPIRY DATE	**……**

With reference to the Standard Terms and Conditions of Contract, Reference Number dated (**5600007598**) between Transnet SOC Ltd ("Transnet") and …….. pursuant to which you have agreed to **For the provision of aluminothermic welding of railway rails on an as and when required basis for a period of six (06) months** on behalf of Transnet subject to such Contract.

The defined terms in the Contract will, unless otherwise indicated, have the same meaning in this Schedule of Requirements. In consideration of the mutual covenant and agreements contained in the Contract and in this Schedule of Requirements, it is agreed as follows:

1. Description of the service

The scope of goods to be provided/performed by **…….** Goods to be provided are **For the provision of aluminothermic welding of railway rails on an as and when required basis for a period of six (06) months** as stipulated in clause 2 below.

2. Scope of Goods

SECTION 4: PRICING AND DELIVERY SCHEDULE

Respondents are required to complete the table below:

Pricing Schedule

Item	Unit Measure	Quantity	Estimated rate (R)	Estimated cost (R)	Remarks
Thermite Welding Services	Per weld	400			
Accommodation	Per night				
Transportation	Rate Per kilometer				
TOTAL PRICE, exclusive of VAT:					
VAT 15% (if applicable)					
Total Inclusive of VAT (where applicable)					

Respondents are to note that Transnet will round off final pricing scores to the nearest 2 (two) decimal places.

3. Contract Manager/s & Personnel to provide the Service

Transnet Contract Manager	
Designation	
Operating Division	
Address	
Telephone	
Email	

Service Provider's Account Manager	
Designation	
Address	
Telephone	
Email	

4. Performance Review Meetings

Contract management and performance review meetings will be held as required by Transnet's Contract Manager.

5. Fees & Disbursements

5.1 In consideration of the supply/performance of the services by ……. pursuant to this Work Order, Transnet will pay as per the agreed value over six (06) months period

IN WITNESS of which this Schedule of Requirements has been duly executed by the parties.

SIGNED for and on behalf of	**SIGNED** for and on behalf of
.....	**Transnet SOC Ltd**
Signature.....	Signature.....
Name.....	Name.....
Position.....	Position.....
Date.....	Date.....

APPENDIX 1

Address for Notices

Any notice or communications between the parties to be given under this Agreement shall be deemed to have been received at the following times:

i. by email transmission – when the sender receives confirmation of receipt;

ii. by hand delivery - immediately upon receipt by the recipient.

Any notice or communications between the parties shall be delivered to the addresses set out below:

.....	**Transnet**
	Addressee:
	Transnet SOC Ltd
	Attention : Group Legal Counsel
	Physical Address:
	138 Eloff Street Braamfontein Johannesburg 2000
email:	

Either party may, by a notice given in accordance with this Schedule 1, change its address or email address for the purpose of this Schedule 1.

APPENDIX 2

Non- Disclosure Agreement

Date: 20--

I (*name*) .....

Of (*address*) .....
.....
.....

Undertake to Transnet SOC Ltd ("Transnet") that:

1. I shall keep confidential and not to disclose or make available to any third party, except with the express prior written consent of Transnet, any Confidential Information relating to Transnet business, assets, customers or staff which is disclosed to me or to which I may have access during the course of providing Goods to Transnet ("my assignment"); and

2. Upon termination of my assignment, I shall return to Transnet all documents, books, discs, tapes or other records (in whatever medium) which I may have in my possession, custody or control and which are the property of Transnet, its customers, staff or agents and any copies thereof.

For the purposes of this Confidentiality Agreement, "Confidential Information" shall mean any information in whatever form including, without limitation, any information relating to systems, operations, plans, intentions, market opportunities, know-how, trade secrets and business affairs of the Transnet Group or its customers, whether in writing, conveyed orally or by machine-readable medium.

I understand that this Confidentiality Agreement shall survive the termination of my assignment.

SIGNED at _____ on _____20--

(Signature) .....

in the presence of:-

Witness name: .....

Witness Signature: .....

Witness address: .....

.....

GENERAL BID CONDITIONS

[June 2022]

TABLE OF CONTENTS

1 DEFINITIONS 3
2 GENERAL 3
3 SUBMITTING OF BID DOCUMENTS 3
4 USE OF BID FORMS 3
5 BID FEES 4
6 VALIDITY PERIOD 4
7 SITE VISITS / BRIEFING SESSIONS 4
8 CLARIFICATION BEFORE THE CLOSING DATE 4
9 COMMUNICATION AFTER THE CLOSING DATE 4
10 UNAUTHORISED COMMUNICATION ABOUT BIDS 4
11 RETURNABLE DOCUMENTS 4
12 DEFAULTS BY RESPONDENTS 4
13 CURRENCY 5
14 PRICES SUBJECT TO CONFIRMATION 5
15 ALTERATIONS MADE BY THE RESPONDENT TO BID PRICES 5
16 EXCHANGE AND REMITTANCE 5
17 ACCEPTANCE OF BID 6
18 NOTICE TO UNSUCCESSFUL RESPONDENTS 6
19 TERMS AND CONDITIONS OF CONTRACT 6
20 CONTRACT DOCUMENTS 6
21 LAW GOVERNING CONTRACT 6
22 IDENTIFICATION 7
23 RESPONDENT'S SAMPLES 7
24 SECURITIES 7
25 PRICE AND DELIVERY BASIS FOR GOODS 7
26 EXPORT LICENCE 8
27 QUALITY OF MATERIAL 8
28 DELETION OF ITEMS EXCLUDED FROM BID 8
29 VALUE-ADDED TAX 8
30 IMPORTANT NOTICE TO RESPONDENTS REGARDING PAYMENT 8
31 CONTRACT QUANTITIES AND DELIVERY REQUIREMENTS 9
32 PLANS, DRAWINGS, DIAGRAMS, SPECIFICATIONS AND DOCUMENTS 10
33 BIDS BY OR ON BEHALF OF FOREIGN RESPONDENTS 10
34 DATABASE OF RESTRICTED SUPPLIERS 11
35 CONFLICT WITH ISSUED RFX DOCUMENT 11

1 DEFINITIONS

Where the following words or phrases are used in this Agreement, such words or phrases shall have the meaning assigned thereto in this clause, except where the context clearly requires otherwise:

1.1 **Bid** shall mean a Respondent's tendered response / proposal to a Transnet RFP or RFQ;

1.2 **Bid Document(s)** shall mean a reference to a Request for Proposal or Request for Quotation;

1.3 **Business Day** shall mean any day other than a Saturday, Sunday or public holiday;

1.4 **Goods** shall mean the goods required by Transnet as specified in its Bid Document;

1.5 **Parties** shall mean Transnet and the Respondents to a Bid Document;

1.6 **Respondent(s)** shall mean a respondent/bidder to a Bid Document;

1.7 **RFP** shall mean Request for Proposal;

1.8 **RFQ** shall mean Request for Quotation;

1.9 **RFX** shall mean RFP or RFQ, as the case may be;

1.10 **Services** shall mean the services required by Transnet as specified in its Bid Document;

1.11 **Service Provider or Supplier** shall mean the successful Respondent;

1.12 **Tax Invoice** shall mean the document as required by Section 20 of the Value-Added Tax Act, 89 of 1991, as may be amended from time to time;

1.13 **Transnet** shall mean Transnet SOC Ltd, a State Owned Company; and

1.14 **VAT** shall mean Value-Added Tax in terms of the Value-Added Tax Act, 89 of 1991, as may be amended from time to time.

2 GENERAL

All Bid Documents and subsequent contracts and orders shall be subject to the following general conditions as laid down by Transnet and are to be strictly adhered to by any Respondent to this RFX.

3 SUBMITTING OF BID DOCUMENTS

3.1 A Bid, which shall hereinafter include reference to an RFP or RFQ, shall be submitted to Transnet no later than the closing date and time specified in accordance with the directions issued in the Bid Documents. Late Bids will not be considered.

3.2 The Bid Documents must be completed in their entirety and Respondents are required to complete and submit their Bid submissions by uploading them into the system against each tender selected. The bidder guide can be found on the Transnet Portal transnetetenders.azurewebsites.net.

4 USE OF BID FORMS

4.1 Where special forms and/or formats are issued by Transnet for the submission of Bids, Respondents are required to submit their Bids by completion of the appropriate sections on such official forms and/or formats and not in other forms and/or formats or documents bearing their own terms and conditions of contract. Non-compliance with this condition may result in the rejection of a Bid.

4.2 Respondents must note that the original Bid forms and/or formats must be completed for submission.

4.3 Only if insufficient space has been allocated to a particular response may a Respondent submit additional information under separate cover using the Company's letterhead. This must be duly cross-referenced in the RFX.

5 BID FEES

A bid fee is not applicable. The Bid Documents may be downloaded directly from National Treasury's e-Tender Publication Portal at www.etenders.gov.za and may also be downloaded from the Transnet website at www.transnet.net free of charge.

6 VALIDITY PERIOD

6.1 The Respondents must hold their Bid valid for acceptance by Transnet at any time within the requested validity period after the closing date of the bid.

6.2 Respondents may be requested to extend their validity period for a specified additional period. In such instances, Respondents will not be allowed to change any aspect of their Bid, unless they are able to demonstrate that the proposed change/s is as a direct and unavoidable consequence of Transnet's extension of the validity period.

7 SITE VISITS / BRIEFING SESSIONS

Respondents may be requested to attend a site visit or briefing session where it is necessary to view the site in order to prepare their Bids, or where Transnet deems it necessary to provide Respondents with further information to allow them to complete their Bids properly. Where such visits or sessions are indicated as compulsory in the RFX Document, Respondents are obliged to attend these meetings as failure to do so will result in their disqualification.

8 CLARIFICATION BEFORE THE CLOSING DATE

Should clarification be required on any aspect of the Bid before the closing date, the Respondent must upload questions onto the Transnet e-Tender Submission Portal or direct such queries to the contact person listed in the RFX Document in the stipulated manner.

9 COMMUNICATION AFTER THE CLOSING DATE

After the closing date of a Bid (i.e. during the evaluation period) the Respondent may only communicate with the contact person listed in the RFX Document.

10 UNAUTHORISED COMMUNICATION ABOUT BIDS

Respondents may at any time communicate with the contact person listed in the RFX Document on any matter relating to its Bid but, in the absence of written authority from the delegated individual (BEC chairperson), no communication on a question affecting the subject of a Bid shall take place between Respondents or other potential service providers or any member of the Bid Adjudication Committee or official of Transnet during the period between the closing date for the receipt of the Bid and the date of the notification of the successful Respondent(s). A Bid, in respect of which any such unauthorised communication has occurred, may be disqualified.

11 RETURNABLE DOCUMENTS

All returnable documents listed in the RFX Documents must be submitted with Respondent's Bid. Failure to submit mandatory returnable schedules / documents will result in disqualification. Failure to submit other schedules / documents may result in disqualification.

12 DEFAULTS BY RESPONDENTS

If the Respondent, after it has been notified of the acceptance of its Bid fails to:

12.1 enter into a formal contract when called upon to do so within such period as Transnet may specify; or

12.2 accept an order in terms of the Bid;

12.3 furnish satisfactory security when called upon to do so for the fulfilment of the contract; or

12.4 comply with any condition imposed by Transnet,

Transnet may, in any such case, without prejudice to any other legal remedy which it may have, proceed to accept any other Bid or, if it is necessary to do so, call for Bids afresh, and may recover from the defaulting Respondent any additional expense incurred by Transnet in calling for new offers or in accepting a less favourable offer.

13 CURRENCY

All monetary amounts referred to in a Bid response must be in Rand, the currency of the Republic of South Africa [**ZAR**], save to the extent specifically permitted in the RFP.

14 PRICES SUBJECT TO CONFIRMATION

Prices which are quoted subject to confirmation will not be considered.

15 ALTERATIONS MADE BY THE RESPONDENT TO BID PRICES

All alterations made by the Respondent to its Bid price(s) prior to the submission of its Bid Documents must be done by deleting the incorrect figures and words where required and by inserting the correct figures and words against the items concerned. All such alterations must be initialled by the person who signs the Bid Documents. Failure to observe this requirement may result in the particular item(s) concerned being excluded in the matter of the award of the business.

16 EXCHANGE AND REMITTANCE

16.1 The Respondent should note that where the whole or a portion of the contract or order value is to be remitted overseas, Transnet shall, if requested to do so by the Supplier/Service Provider, effect payment overseas directly to the foreign principal or manufacturer of such percentage of the contract or order value as may be stipulated by the Respondent in its Bid Documents.

16.2 It is Transnet's preference to enter into Rand-based agreements. Transnet would request, therefore, that the Respondent give favourable consideration to obtaining forward exchange cover on the foreign currency portion of the Agreement at a cost that is acceptable to Transnet to protect itself against any currency rate fluctuation risks for the duration of any resulting contract or order.

16.3 The Respondent who desires to avail itself of the aforementioned facility must at the time of bidding furnish the information called for in the Exchange and Remittance section of the Bid Documents and also furnish full details of the principals or manufacturer to whom payment is to be made.

16.4 The South African Reserve Bank's approval is required before any foreign currency payments can be made to or on behalf of Respondents.

16.5 Transnet will not recognise any claim for adjustment of the order and/or contract price if the increase in price arises after the date on which the Goods/Services were to be delivered, as set out in the order and/or contract, or any subsequent agreement between the parties.

16.6 Transnet reserves the right to request a pro-forma invoice/tax invoice in order to ensure compliance with the contract and Value-Added Tax Act no. 89 of 1991 [VAT Act].

17 ACCEPTANCE OF BID

17.1 Upon the acceptance of a Bid by Transnet, the parties shall be bound by these General Bid Conditions and any contractual terms and/or any schedule of "Special Conditions" or otherwise which form part of the Bid Documents.

17.2 Where the Respondent has been informed by Transnet of the acceptance of its Bid, an email communication that has been successfully sent to the Respondent shall be regarded as proof of delivery to the Respondent 1 day after the date of submission.

18 NOTICE TO UNSUCCESSFUL RESPONDENTS

18.1 Unsuccessful Respondents shall be advised in writing that their Bids have not been accepted as soon as possible after the closing date of the Bid. On award of business to the successful Respondent all unsuccessful Respondents must be informed of the name of the successful Respondent and of the reason as to why their Bids had been unsuccessful.

19 TERMS AND CONDITIONS OF CONTRACT

19.1 The Supplier/Service Provider shall adhere to the Terms and Conditions of Contract issued with the Bid Documents, together with any schedule of "Special Conditions" or otherwise which form part of the Bid Documents.

19.2 Should the Respondent find any conditions unacceptable, it should indicate which conditions are unacceptable and offer amendments/ alternatives by written submission on a company letterhead. Any such submission shall be subject to review by Transnet's Legal Counsel who shall determine whether the proposed amendments /alternative(s) are acceptable or otherwise, as the case may be. Respondents will be afforded an opportunity to withdraw an unacceptable deviation, failing which the respondent will be disqualified.

20 CONTRACT DOCUMENTS

20.1 The contract documents will comprise these General Bid Conditions, the Terms and Conditions of Contract and any schedule of "Special Conditions" which form part of the Bid Documents.

20.2 The abovementioned documents together with the Respondent's Bid response will constitute the contract between the parties upon receipt by the Respondent of Transnet's letter of acceptance, subject to all additional amendments and/or special conditions thereto as agreed to by the parties.

20.3 Should Transnet inform the Respondent that a formal contract will be signed, the abovementioned documents together with the Respondent's Bid response [and, if any, its covering letter and any subsequent exchange of correspondence] as well as Transnet's Letter of Acceptance, shall constitute a binding contract until the final contract is signed.

21 LAW GOVERNING CONTRACT

The law of the Republic of South Africa shall govern the contract created by the acceptance of a Bid. The *domicilium citandi et executandi* shall be a place in the Republic of South Africa to be specified by the Respondent in its Bid at which all legal documents may be served on the Respondent who shall agree to submit to the jurisdiction of the courts of the Republic of South Africa. A foreign Respondent shall, therefore, state in its Bid the name of its authorised representative in the Republic of South Africa who is empowered to sign any contract which may be entered into in the event of its Bid being accepted and to act on its behalf in all matters relating to the contract.

22 IDENTIFICATION

If the Respondent is a company, the full names of the directors shall be stated in the Bid. If the Respondent is a close corporation, the full names of the members shall be stated in the Bid. If the Respondent is a partnership or an individual trading under a trade name, the full names of the partners or of such individual, as the case may be, shall be furnished.

23 RESPONDENT'S SAMPLES

23.1 If samples are required from Respondents, such samples shall be suitably marked with the Respondent's name and address, the Bid number and the Bid item number and must be despatched in time to reach the addressee as stipulated in the Bid Documents on or before the closing date of the Bid. Failure to submit samples by the due date may result in the rejection of a Bid.

23.2 Transnet reserves the right to retain samples furnished by Respondents in compliance with Bid conditions.

23.3 Payment will not be made for a successful Respondent's samples that may be retained by Transnet for the purpose of checking the quality and workmanship of Goods/Services delivered in execution of a contract.

23.4 If Transnet does not wish to retain unsuccessful Respondents' samples and the Respondents require their return, such samples may be collected by the Respondents at their own risk and cost.

24 SECURITIES

24.1 The successful Respondent, when called upon to do so, shall provide security to the satisfaction of Transnet for the due fulfilment of a contract or order. Such security shall be in the form of a Deed of Suretyship [Deed of Suretyship] furnished by an approved bank, building society, insurance or guarantee corporation carrying on business in South Africa.

24.2 The security may be applied in whole or part at the discretion of Transnet to make good any loss or damage which Transnet may incur in consequence of a breach of the contract or any part thereof.

24.3 Such security, if required, shall be an amount which will be stipulated in the Bid Documents.

24.4 For the purpose of clause 24.124.1 above, Transnet will supply a Deed of Suretyship form to the successful Respondent for completion and no guarantee in any other form will be accepted. A copy of such form will be supplied to Respondents on request. For this purpose a Deed of Suretyship form will be provided which shall be completed and returned to Transnet or a designated official by the successful Respondent within 30 [thirty] calendar days from the date of the letter of acceptance. No payment will be made until the form, duly completed, is delivered to Transnet. Failure to return the Deed of Suretyship within the prescribed time shall, save where prior extension has been granted, entitle Transnet without notice to the Supplier/Service Provider to cancel the contract with immediate effect.

24.5 Additional costs incurred by Transnet necessitated by reason of default on the part of the Supplier/Service Provider in relation to the conditions of this clause 244 will be for the account of the Supplier/Service Provider.

25 PRICE AND DELIVERY BASIS FOR GOODS

25.1 Unless otherwise specified in the Bid Documents, the prices quoted for Goods must be on a Delivered Duty Paid [latest ICC Incoterms] price basis in accordance with the terms and at the delivery point or

points specified in Transnet's Bid Documents. Bids for supply on any other basis of delivery are liable to disqualification. The lead time for delivery stated by the Respondent must be inclusive of all non-working days or holidays, and of periods occupied in stocktaking or in effecting repairs to or overhauling plant, which would ordinarily occur within the delivery period given by the Respondent.

25.2 Respondents must furnish their Bid prices in the Price Schedule of the Bid Documents on the following basis:

a) Local Supplies - Prices for Goods to be manufactured, produced or assembled in the Republic of South Africa, or imported supplies held in South Africa, to be quoted on a Delivered RSA named destination basis.

b) Imported Supplies - Prices for Goods to be imported from all sources to be quoted on a Delivered Duty Paid [latest ICC Incoterms] basis, to end destination in South Africa, unless otherwise specified in the Bid Price Schedule.

26 EXPORT LICENCE

The award of a Bid for Goods to be imported may be subject to the issue of an export licence in the country of origin or supply. If required, the Supplier/Service Provider's manufacturer or forwarding agent shall be required to apply for such licence.

27 QUALITY OF MATERIAL

Unless otherwise stipulated, the Goods offered shall be NEW i.e. in unused condition, neither second-hand nor reconditioned.

28 DELETION OF ITEMS EXCLUDED FROM BID

The Respondent must delete items for which it has not tendered or for which the price has been included elsewhere in its Bid.

29 VALUE-ADDED TAX

29.1 In respect of local supplies, i.e. Goods to be manufactured, produced or assembled in the Republic of South Africa, or imported supplies held or already in transit to South Africa, the prices quoted by the Respondent are to be inclusive of VAT which must be shown separately at the standard rate on the Tax Invoice.

29.2 In respect of foreign Services rendered:

a) the invoicing by a South African Service Provider on behalf of its foreign principal rendering such Service represents a Service rendered by the principal; and

b) the Service Provider's Tax Invoice(s) for the local portion only [i.e. the "commission" for the Services rendered locally] must show the VAT separately.

30 IMPORTANT NOTICE TO RESPONDENTS REGARDING PAYMENT

30.1 Method of Payment

a) The attention of the Respondent is directed to the Terms and Conditions of Contract which set out the conditions of payment on which Bid price(s) shall be based.

b) However, in addition to the aforegoing the Respondent is invited to submit offers based on alternative methods of payment and/or financing proposals.

c) The Respondent is required to give full particulars of the terms that will be applicable to its alternative offer(s) and the financial merits thereof will be evaluated and taken into consideration when the Bid is adjudicated.

d) The Respondent must, therefore, in the first instance, tender strictly in accordance with clause 30.1 (a) above. Failure to comply with clause 30.1 (a) above may preclude a Bid from further consideration.

NOTE: The successful Respondent [the **Supplier/Service Provider**] shall, where applicable, be required to furnish a guarantee covering any advance payments.

30.2 Conditional Discount

Respondents offering prices which are subject to a conditional discount applicable for payment within a specific period are to note that the conditional period will be calculated as from the date of receipt by Transnet of the Supplier/Service Provider's month-end statement reflecting the relevant Tax Invoice(s) for payment purposes, provided the conditions of the order or contract have been fulfilled and the Tax Invoice is correct in all respects as referred to in the contract or order. Incomplete and/or incorrect Tax Invoices shall be returned and the conditional period will be recalculated from the date of receipt of the correct documentation.

31 CONTRACT QUANTITIES AND DELIVERY REQUIREMENTS

31.1 Contract Quantities

a) It must be clearly understood that although Transnet does not bind itself to purchase a definitive quantity under any contract which may be entered into pursuant to this Bid, the successful Respondent nevertheless undertakes to supply against the contract such quantities as may be ordered against the contract, which orders are posted or delivered by hand or transmitted electronically on or before the expiry date of such contract.

b) It is furthermore a condition that Transnet will not accept liability for any material/stocks specially ordered or carried by the Respondent with a view to meeting the requirements under any such contract.

c) The estimated planned quantities likely to be ordered by Transnet per annum are furnished in relevant section of the Bid Documents. For avoidance of doubt the estimated quantities are estimates and Transnet reserves the right to order only those quantities sufficient for its operational requirements.

31.2 Delivery Period

a) Period Contracts and Fixed Quantity Requirements

It will be a condition of any resulting contract/order that the delivery period embodied therein will be governed by the provisions of the Terms and Conditions of Contract.

b) Progress Reports

The Supplier/Service Provider may be required to submit periodical progress reports with regard to the delivery of the Goods/Services.

c) Emergency Demands as and when required

If, due to unforeseen circumstances, supplies of the Goods/Services covered by the Bid are required at short notice for immediate delivery, the Supplier/Service Provider will be given first right of refusal for such business. If it is unable to meet the desired critical delivery period,

Transnet reserves the right to purchase such supplies as may be required to meet the emergency outside the contract if immediate delivery can be offered from any other source. The *Total or Partial Failure to Perform the Scope of Supply* section in the Terms and Conditions of Contract will not be applicable in these circumstances.

32 PLANS, DRAWINGS, DIAGRAMS, SPECIFICATIONS AND DOCUMENTS

32.1 Copyright

Copyright in plans, drawings, diagrams, specifications and documents compiled by the Supplier/Service Provider for the purpose of contract work shall be governed by the Intellectual Property Rights section in the Terms and Conditions of Contract.

32.2 Drawings and specifications

In addition to what may be stated in any Bid Document, the Respondent should note that, unless notified to the contrary by Transnet or a designated official by means of an official amendment to the Bid Documents, it is required to tender for Goods/Services strictly in accordance with the drawings and/or specifications supplied by Transnet, notwithstanding that it may be aware that alterations or amendments to such drawings or specifications are contemplated by Transnet.

32.3 Respondent's drawings

Drawings required to be submitted by the Respondent must be furnished before the closing time and date of the Bid. The non-receipt of such drawings by the appointed time may disqualify the Bid.

32.4 Foreign specifications

The Respondent quoting for Goods/Services in accordance with foreign specifications, other than British and American standards, is to submit translated copies of such specifications with the Bid. In the event of any departures or variations between the foreign specification(s) quoted in the Bid Documents, full details regarding such departures or variations must be furnished by the Respondent in a covering letter attached to the Bid. Non-compliance with this condition may result in disqualification.

33 BIDS BY OR ON BEHALF OF FOREIGN RESPONDENTS

33.1 Bids submitted by foreign principals may be forwarded directly by the principals or by its South African representative or agent to the designated official of Transnet according to whichever officer is specified in the Bid Documents.

33.2 In the case of a representative or agent, written proof must be submitted to the effect that such representative or agent has been duly authorised to act in that capacity by the principal. Failure to submit such authorisation by the representative or agent shall disqualify the Bid.

33.3 When legally authorised to prepare and submit Bids on behalf of their principals not domiciled in the Republic of South Africa, representatives or agents must compile the Bids in the names of such principals and sign them on behalf of the latter.

33.4 South African representatives or agents of a successful foreign Respondent must when so required enter into a formal contract in the name of their principals and must sign such contract on behalf of the latter. In every such case a legal Power of Attorney from their principals must be furnished to Transnet by the South African representative or agents authorising them to enter into and sign such contract.

a) Such Power of Attorney must comply with Rule 63 (Authentication of documents executed outside the Republic for use within the Republic) of the Uniform Rules of Court: Rules regulating the conduct of the proceedings of the several provincial and local divisions of the Supreme Court of South Africa.

b) The Power of Attorney must be signed by the principal under the same title as used in the Bid Documents.

c) If a Power of Attorney held by the South African representative or agent includes matters of a general nature besides provision for the entering into and signing of a contract with Transnet, a certified copy thereof should be furnished.

d) The Power of Attorney must authorise the South African representative or agent to choose the *domicilium citandi et executandi.*

33.5 If payment is to be made in South Africa, the foreign Supplier/Service Provider [i.e. the principal, or its South African agent or representative], must notify Transnet in writing whether, for payment by electronic funds transfer [EFT]:

a) funds are to be transferred to the credit of the foreign Supplier/Service Provider's account at a bank in South Africa, in which case the name and branch of such bank shall be furnished; or

b) funds are to be transferred to the credit of its South African agent or representative, in which case the name and branch of such bank shall be furnished.

33.6 The attention of the Respondent is directed to clause 24 above [Securities] regarding the provision of security for the fulfilment of contracts and orders and the manner and form in which such security is to be furnished.

34 DATABASE OF RESTRICTED SUPPLIERS

The process of restriction is used to exclude a company/person from conducting future business with Transnet and other organs of state for a specified period. No Bid shall be awarded to a Bidder whose name (or any of its members, directors, partners or trustees) appear on the Register of Tender Defaulters kept by National Treasury, or who have been placed on National Treasury's List of Restricted Suppliers. Transnet reserves the right to withdraw an award, or cancel a contract concluded with a Bidder should it be established, at any time, that a bidder has been restricted with National Treasury by another government institution.

35 CONFLICT WITH ISSUED RFX DOCUMENT

35.1 Should a conflict arise between these General Bid Conditions and the issued RFX document, the conditions stated in the RFX document shall prevail.

oooOOOooo

Important Note: All potential bidders must read this document and certify in the RFX Declaration Form that they have acquainted themselves with, and agree with the content. The contract with the successful bidder will automatically incorporate this Integrity Pact as part of the final concluded contract.

INTEGRITY PACT

Between

TRANSNET SOC LTD

Registration Number: 1990/000900/30

("Transnet")

And The Bidder / Supplier/ Service Provider / Contractor (hereinafter referred to as the "Bidder / Supplier")

PREAMBLE

Transnet values full compliance with all relevant laws and regulations, ethical standards and the principles of economical use of resources, fairness and transparency in its relations with its Bidders / Suppliers.

In order to achieve these goals, Transnet and the Bidder / Supplier hereby enter into this agreement hereinafter referred to as the "Integrity Pact" which will form part of the Bidder's / Supplier's application for registration with Transnet as a vendor.

The general purpose of this Integrity Pact is to agree on avoiding all forms of dishonesty, fraud and corruption by following a system that is fair, transparent and free from any undue influence prior to, during and subsequent to the currency of any procurement and / or reverse logistics event and any further contract to be entered into between the Parties, relating to such event.

All Bidders / Suppliers will be required to sign and comply with undertakings contained in this Integrity Pact, should they want to be registered as a Transnet vendor.

1 OBJECTIVES

1.1 Transnet and the Bidder / Supplier agree to enter into this Integrity Pact, to avoid all forms of dishonesty, fraud and corruption including practices that are anti-competitive in nature, negotiations made in bad faith and under-pricing by following a system that is fair, transparent and free from any influence / unprejudiced dealings prior to, during and subsequent to the currency of the contract to be entered into with a view to:

a) Enable Transnet to obtain the desired contract at a reasonable and competitive price in conformity to the defined specifications of the works, goods and services; and

b) Enable Bidders / Suppliers to abstain from bribing or participating in any corrupt practice in order to secure the contract.

2 COMMITMENTS OF TRANSNET

Transnet commits to take all measures necessary to prevent dishonesty, fraud and corruption and to observe the following principles:

2.1 Transnet hereby undertakes that no employee of Transnet connected directly or indirectly with the sourcing event and ensuing contract, will demand, take a promise for or accept directly or through intermediaries any bribe, consideration, gift, reward, favour or any material or immaterial benefit or any other advantage from the Bidder, either for themselves or for any person, organisation or third party related to the contract in exchange for an advantage in the bidding process, bid evaluation, contracting or implementation process related to any contract.

2.2 Transnet will, during the registration and bidding process treat all Bidders / Suppliers with equity, transparency and fairness. Transnet will in particular, before and during the registration process, provide to all Bidders / Suppliers the same information and will not provide to any Bidders / Suppliers confidential / additional information through which the Bidders / Suppliers could obtain an advantage in relation to any bidding process.

2.3 Transnet further confirms that its employees will not favour any prospective bidder in any form that could afford an undue advantage to a particular bidder during the tendering stage, and will further treat all Bidders / Supplier participating in the bidding process in a fair manner.

2.4 Transnet will exclude from the bidding process such employees who have any personal interest in the Bidders / Suppliers participating in the bidding process.

3 OBLIGATIONS OF THE BIDDER / SUPPLIER

3.1 Transnet has a '**Zero Gifts'** Policy. No employee is allowed to accept gifts, favours or benefits.

a) Transnet officials and employees **shall not** solicit, give or accept, or from agreeing to solicit, give, accept or receive directly or indirectly, any gift, gratuity, favour, entertainment, loan, or anything of monetary value, from any person or juridical entities in the course of official duties or in connection with any operation being managed by, or any transaction which may be affected by the functions of their office.

b) Transnet officials and employees **shall not** solicit or accept gifts of any kind, from vendors, suppliers, customers, potential employees, potential vendors, and suppliers, or any other individual or organisation irrespective of the value.

c) Under **no circumstances** should gifts, business courtesies or hospitality packages be accepted from or given to prospective suppliers participating in a tender process at the respective employee's Operating Division, regardless of retail value.

d) Gratuities, bribes or kickbacks of any kind must never be solicited, accepted or offered, either directly or indirectly. This includes money, loans, equity, special privileges, personal favours, benefit or services. Such favours will be considered to constitute corruption.

3.2 The Bidder / Supplier commits itself to take all measures necessary to prevent corrupt practices, unfair means and illegal activities during any stage of its bid or during any ensuing contract stage in order to secure the contract or in furtherance to secure it and in particular the Bidder / Supplier commits to the following:

a) The Bidder / Supplier will not, directly or through any other person or firm, offer, promise or give to Transnet or to any of Transnet's employees involved in the bidding process or to any third person any material or other benefit or payment, in order to obtain in exchange an advantage during the bidding process; and

b) The Bidder / Supplier will not offer, directly or through intermediaries, any bribe, gift, consideration, reward, favour, any material or immaterial benefit or other advantage, commission, fees, brokerage or inducement to any employee of Transnet, connected directly or indirectly with the bidding process, or to any person, organisation or third party related to the contract in exchange for any advantage in the bidding, evaluation, contracting and implementation of the contract.

3.3 The Bidder / Supplier will not collude with other parties interested in the contract to preclude a competitive bid price, impair the transparency, fairness and progress of the bidding process, bid evaluation, contracting and implementation of the contract. The Bidder / Supplier further commits itself to delivering against all agreed upon conditions as stipulated within the contract.

3.4 The Bidder / Supplier will not enter into any illegal or dishonest agreement or understanding, whether formal or informal with other Bidders / Suppliers. This applies in particular to certifications, submissions or non-submission of documents or actions that are restrictive or to introduce cartels into the bidding process.

3.5 The Bidder / Supplier will not commit any criminal offence under the relevant anti-corruption laws of South Africa or any other country. Furthermore, the Bidder /Supplier will not use for illegitimate purposes or for restrictive purposes or personal gain, or pass on to others, any information provided by Transnet as part of the business relationship, regarding plans, technical proposals and business details, including information contained or transmitted electronically.

3.6 A Bidder / Supplier of foreign origin shall disclose the name and address of its agents or representatives in South Africa, if any, involved directly or indirectly in the registration or bidding process. Similarly, the Bidder / Supplier of South African nationality shall furnish the name and address of the foreign principals, if any, involved directly or indirectly in the registration or bidding process.

3.7 The Bidder / Supplier will not misrepresent facts or furnish false or forged documents or information in order to influence the bidding process to the advantage of the Bidder / Supplier or detriment of Transnet or other competitors.

3.8 Transnet may require the Bidder / Supplier to furnish Transnet with a copy of its code of conduct. Such code of conduct must address the compliance programme for the implementation of the code of conduct and reject the use of bribes and other dishonest and unethical conduct.

3.9 The Bidder / Supplier will not instigate third persons to commit offences outlined above or be an accessory to such offences.

3.10 The Bidder/Supplier confirms that they will uphold the ten principles of the United Nations Global Compact (UNGC) in the fields of Human Rights, Labour, Anti-Corruption and the Environment when undertaking business with Transnet as follows:

a) Human Rights
- Principle 1: Businesses should support and respect the protection of internationally proclaimed human rights; and
- Principle 2: make sure that they are not complicit in human rights abuses.

b) Labour
- Principle 3: Businesses should uphold the freedom of association and the effective recognition of the right to collective bargaining;
- Principle 4: the elimination of all forms of forced and compulsory labour;
- Principle 5: the effective abolition of child labour; and
- Principle 6: the elimination of discrimination in respect of employment and occupation.

c) Environment
- Principle 7: Businesses should support a precautionary approach to environmental challenges;
- Principle 8: undertake initiatives to promote greater environmental responsibility; and
- Principle 9: encourage the development and diffusion of environmentally friendly technologies.

d) Anti-Corruption
- Principle 10: Businesses should work against corruption in all its forms, including extortion and bribery.

4 INDEPENDENT BIDDING

4.1 For the purposes of this undertaking in relation to any submitted Bid, the Bidder declares to fully understand that the word "competitor" shall include any individual or organisation, other than the Bidder, whether or not affiliated with the Bidder, who:

a) has been requested to submit a Bid in response to this Bid invitation;

b) could potentially submit a Bid in response to this Bid invitation, based on their qualifications, abilities or experience; and

c) provides the same Goods and Services as the Bidder and/or is in the same line of business as the Bidder.

4.2 The Bidder has arrived at his submitted Bid independently from, and without consultation, communication, agreement or arrangement with any competitor. However communication between partners in a joint venture or consortium will not be construed as collusive bidding.

4.3 In particular, without limiting the generality of paragraph 4.2 above, there has been no consultation, communication, agreement or arrangement with any competitor regarding:

a) prices;

b) geographical area where Goods or Services will be rendered [market allocation];

c) methods, factors or formulas used to calculate prices;

d) the intention or decision to submit or not to submit, a Bid;

e) the submission of a Bid which does not meet the specifications and conditions of the RFP; or

f) bidding with the intention of not winning the Bid.

4.4 In addition, there have been no consultations, communications, agreements or arrangements with any competitor regarding the quality, quantity, specifications and conditions or delivery particulars of the Goods or Services to which his/her Bid relates.

4.5 The terms of the Bid as submitted have not been, and will not be, disclosed by the Bidder, directly or indirectly, to any competitor, prior to the date and time of the official Bid opening or of the awarding of the contract.

4.6 Bidders are aware that, in addition and without prejudice to any other remedy provided to combat any restrictive practices related to bids and contracts, Bids that are suspicious will be reported to the Competition Commission for investigation and possible imposition of administrative penalties in terms of section 59 of the Competition Act No 89 of 1998 and/or may be reported to the National Prosecuting Authority [**NPA**] for criminal investigation and/or may be restricted from conducting business with the public sector for a period not exceeding 10 [ten] years in terms of the Prevention and Combating of Corrupt Activities Act No 12 of 2004 or any other applicable legislation.

5 DISQUALIFICATION FROM BIDDING PROCESS

5.1 If the Bidder / Supplier has committed a transgression through a violation of paragraph 3 of this Integrity Pact or in any other form such as to put its reliability or credibility as a Bidder / Supplier into question, Transnet may reject the Bidder's / Supplier's application from the registration or bidding process and remove the Bidder / Supplier from its database, if already registered.

5.2 If the Bidder / Supplier has committed a transgression through a violation of paragraph 3, or any material violation, such as to put its reliability or credibility into question, Transnet may after following due procedures and at its own discretion also exclude the Bidder / Supplier from future bidding processes. The imposition and duration of the exclusion will be determined by the severity of the transgression. The severity will be determined by the circumstances of the case, which will include amongst others the number of transgressions, the position of the transgressors within the company hierarchy of the Bidder / Supplier and the amount of the damage. The exclusion will be imposed for up to a maximum of 10 (ten) years. However, Transnet reserves the right to impose a longer period of exclusion, depending on the gravity of the misconduct.

5.3 If the Bidder / Supplier can prove that it has restored the damage caused by it and has installed a suitable corruption prevention system, or taken other remedial measures as the circumstances of the case may require, Transnet may at its own discretion revoke the exclusion or suspend the imposed penalty.

6 DATABASE OF RESTRICTED SUPPLIERS

6.1 The process of restriction is used to exclude a company/person from conducting future business with Transnet and other organs of state for a specified period. No Bid shall be awarded to a Bidder whose name (or any of its members, directors, partners or trustees) appear on the Register of Tender Defaulters kept by National Treasury, or who have been placed on National Treasury's List of Restricted Suppliers. Transnet reserves the right to withdraw an award, or cancel a contract concluded with a Bidder should it be established, at any time, that a bidder has been restricted with National Treasury by another government institution.

6.2 All the stipulations on Transnet's restriction process as laid down in Transnet's Supply Chain Policy and Procurement Procedures Manual are included herein by way of reference. Below follows a condensed summary of this restriction procedure.

6.3 On completion of the restriction procedure, Transnet will submit the restricted entity's details (including the identity number of the individuals and registration number of the entity) to National Treasury for placement on National Treasury's Database of Restricted Suppliers for the specified period of exclusion. National

Treasury will make the final decision on whether to restrict an entity from doing business with any organ of state for a period not exceeding 10 years and place the entity concerned on the Database of Restricted Suppliers published on its official website.

6.4 The decision to restrict is based on one of the grounds for restriction. The standard of proof to commence the restriction process is whether a "*prima facie*" (i.e. on the face of it) case has been established.

6.5 Depending on the seriousness of the misconduct and the strategic importance of the Goods/Services, in addition to restricting a company/person from future business, Transnet may decide to terminate some or all existing contracts with the company/person as well.

6.6 A supplier or contractor to Transnet may not subcontract any portion of the contract to a restricted company.

6.7 Grounds for restriction include: If any person/Enterprise which has submitted a Bid, concluded a contract, or, in the capacity of agent or subcontractor, has been associated with such Bid or contract:

a) Has, in bad faith, withdrawn such Bid after the advertised closing date and time for the receipt of Bids;

b) has, after being notified of the acceptance of his Bid, failed or refused to sign a contract when called upon to do so in terms of any condition forming part of the bid documents;

c) has carried out any contract resulting from such bid in an unsatisfactory manner or has breached any condition of the contract;

d) has offered, promised or given a bribe in relation to the obtaining or execution of the contract;

e) has acted in a fraudulent or improper manner or in bad faith towards Transnet or any Government Department or towards any public body, Enterprise or person;

f) has made any incorrect statement in a certificate or other communication with regard to the Local Content of his Goods or his B-BBEE status and is unable to prove to the satisfaction of Transnet that:

(i) he made the statement in good faith honestly believing it to be correct; and

(ii) before making such statement he took all reasonable steps to satisfy himself of its correctness;

g) has submitted false information regarding any other matter required in terms of the Preferential Procurement Regulations, 2017 issued in terms of the Preferential Procurement Policy Framework Act which will affect the evaluation of a Bid or where a Bidder has failed to declare any subcontracting arrangements;

h) caused Transnet damage, or to incur costs in order to meet the contractor's requirements and which could not be recovered from the contractor;

i) has litigated against Transnet in bad faith.

7 PREVIOUS TRANSGRESSIONS

7.1 The Bidder / Supplier hereby declares that no previous transgressions resulting in a serious breach of any law, including but not limited to, corruption, fraud, theft, extortion and contraventions of the Competition Act 89 of 1998, which occurred in the last 5 (five) years with any other public sector undertaking, government department or private sector company that could justify its exclusion from its registration on the Bidder's / Supplier's database or any bidding process.

7.2 If it is found to be that the Bidder / Supplier made an incorrect statement on this subject, the Bidder / Supplier can be rejected from the registration process or removed from the Bidder / Supplier database, if already registered, for such reason (refer to the Breach of Law Form contained in the applicable RFX document.)

8 SANCTIONS FOR VIOLATIONS

8.1 Transnet shall also take all or any one of the following actions, wherever required to:

a) Immediately exclude the Bidder / Supplier from the bidding process or call off the pre-contract negotiations without giving any compensation to the Bidder / Supplier. However, the proceedings with the other Bidders / Suppliers may continue;

b) Immediately cancel the contract, if already awarded or signed, without giving any compensation to the Bidder / Supplier;

c) Recover all sums already paid by Transnet;

d) Encash the advance bank guarantee and performance bond or warranty bond, if furnished by the Bidder / Supplier, in order to recover the payments, already made by Transnet, along with interest;

e) Cancel all or any other contracts with the Bidder / Supplier;

f) Exclude the Bidder / Supplier from entering into any bid with Transnet and other organs of state in future for a specified period; and

g) If the Supplier subcontracted a portion of the bid to another person without declaring it to Transnet, Transnet must penalise the Supplier up to 10% of the value of the contract.

9 CONFLICTS OF INTEREST

9.1 A conflict of interest includes, inter alia, a situation in which:

a) A Transnet employee has a personal financial interest in a bidding / supplying entity; and

b) A Transnet employee has private interests or personal considerations or has an affiliation or a relationship which affects, or may affect, or may be perceived to affect his / her judgment in action in the best interest of Transnet, or could affect the employee's motivations for acting in a particular manner, or which could result in, or be perceived as favouritism or nepotism.

9.2 A Transnet employee uses his / her position, or privileges or information obtained while acting in the capacity as an employee for:

a) Private gain or advancement; or

b) The expectation of private gain, or advancement, or any other advantage accruing to the employee must be declared in a prescribed form.

Thus, conflicts of interest of any bid committee member or any person involved in the sourcing process must be declared in a prescribed form.

9.3 If a Bidder / Supplier has or becomes aware of a conflict of interest i.e. a family, business and / or social relationship between its owner(s) / member(s) / director(s) / partner(s) / shareholder(s) and a Transnet employee / member of Transnet's Board of Directors in respect of a bid which will be considered for the bid process, the Bidder / Supplier:

a) must disclose the interest and its general nature, in the Request for Proposal ("RFX") declaration form; or

b) must notify Transnet immediately in writing once the circumstances has arisen.

9.4 The Bidder / Supplier shall not lend to or borrow any money from or enter into any monetary dealings or transactions, directly or indirectly, with any committee member or any person involved in the sourcing process, where this is done, Transnet shall be entitled forthwith to rescind the contract and all other contracts with the Bidder / Supplier.

10 DISPUTE RESOLUTION

10.1 Transnet recognises that trust and good faith are pivotal to its relationship with its Bidders / Suppliers. When a dispute arises between Transnet and its Bidder / Supplier, the parties should use their best endeavours to resolve the dispute in an amicable manner, whenever possible. Litigation in bad faith negates the principles of trust and good faith on which commercial relationships are based. Accordingly, following a restriction process as mentioned in paragraph 6 above, Transnet will not do business with a company that litigates against it in bad faith or is involved in any action that reflects bad faith on its part. Litigation in bad faith includes, but is not limited to the following instances:

a) **Vexatious proceedings**: these are frivolous proceedings which have been instituted without proper grounds;

b) **Perjury:** where a supplier make a false statement either in giving evidence or on an affidavit;

c) **Scurrilous allegations:** where a supplier makes allegations regarding a senior Transnet employee which are without proper foundation, scandalous, abusive or defamatory; and

d) **Abuse of court process:** when a supplier abuses the court process in order to gain a competitive advantage during a bid process.

11 GENERAL

11.1 This Integrity Pact is governed by and interpreted in accordance with the laws of the Republic of South Africa.

11.2 The actions stipulated in this Integrity Pact are without prejudice to any other legal action that may follow in accordance with the provisions of the law relating to any civil or criminal proceedings.

11.3 The validity of this Integrity Pact shall cover all the bidding processes and will be valid for an indefinite period unless cancelled by either Party.

11.4 Should one or several provisions of this Integrity Pact turn out to be invalid the remainder of this Integrity Pact remains valid.

11.5 Should a Bidder / Supplier be confronted with dishonest, fraudulent or corruptive behaviour of one or more Transnet employees, Transnet expects its Bidders / Suppliers to report this behaviour directly to a senior Transnet official / employee or alternatively by using Transnet's "Tip-Off Anonymous" hotline number 0800 003 056, whereby your confidentiality is guaranteed.

The Parties hereby declare that each of them has read and understood the clauses of this Integrity Pact and shall abide by it. To the best of the Parties' knowledge and belief, the information provided in this Integrity Pact is true and correct.

oooOOOooo

NON DISCLOSURE AGREEMENT

[April 2020]

THIS AGREEMENT is made between

Transnet SOC Ltd [**Transnet**] [Registration No. 1990/000900/30]
whose registered office is at 138 Eloff Street, Braamfontein, JOHANNESBURG, 2000,

and

the Company as indicated in the RFP bid response hereto

WHEREAS

Transnet and the Company wish to exchange Information [as defined below] and it is envisaged that each party may from time to time receive Information relating to the other in respect thereof. In consideration of each party making available to the other such Information, the parties jointly agree that any dealings between them shall be subject to the terms and conditions of this Agreement which themselves will be subject to the parameters of the Bid Document.

IT IS HEREBY AGREED

1. INTERPRETATION

In this Agreement:

1.1 **Agents** mean directors, officers, employees, agents, professional advisers, contractors or sub-contractors, or any Group member;

1.2 **Bid** or **Bid Document** means Transnet's Request for Information [**RFI**] Request for Proposal [**RFP**] or Request for Quotation [**RFQ**], as the case may be;

1.3 **Confidential Information** means any information or other data relating to one party [the **Disclosing Party**] and/or the business carried on or proposed or intended to be carried on by that party and which is made available for the purposes of the Bid to the other party [the **Receiving Party**] or its Agents by the Disclosing Party or its Agents or recorded in agreed minutes following oral disclosure and any other information otherwise made available by the Disclosing Party or its Agents to the Receiving Party or its Agents, whether before, on or after the date of this Agreement, and whether in writing or otherwise, including any information, analysis or specifications derived from, containing or reflecting such information but excluding information which:

1.3.1 is publicly available at the time of its disclosure or becomes publicly available [other than as a result of disclosure by the Receiving Party or any of its Agents contrary to the terms of this Agreement]; or

1.3.2 was lawfully in the possession of the Receiving Party or its Agents [as can be demonstrated by its written records or other reasonable evidence] free of any restriction as to its use or disclosure prior to its being so disclosed; or

1.3.3 following such disclosure, becomes available to the Receiving Party or its Agents [as can be demonstrated by its written records or other reasonable evidence] from a source other than the Disclosing Party or its Agents, which source is not bound by any duty of confidentiality owed, directly or indirectly, to the Disclosing Party in relation to such information;

1.4 **Group** means any subsidiary, any holding company and any subsidiary of any holding company of either party; and

1.5 **Information** means all information in whatever form including, without limitation, any information relating to systems, operations, plans, intentions, market opportunities, know-how, trade secrets and business affairs whether in writing, conveyed orally or by machine-readable medium.

2. CONFIDENTIAL INFORMATION

2.1 All Confidential Information given by one party to this Agreement [the **Disclosing Party**] to the other party [the **Receiving Party**] will be treated by the Receiving Party as secret and confidential and will not, without the Disclosing Party's written consent, directly or indirectly communicate or disclose [whether in writing or orally or in any other manner] Confidential Information to any other person other than in accordance with the terms of this Agreement.

2.2 The Receiving Party will only use the Confidential Information for the sole purpose of technical and commercial discussions between the parties in relation to the Bid or for the subsequent performance of any contract between the parties in relation to the Bid.

2.3 Notwithstanding clause 2.1 above, the Receiving Party may disclose Confidential Information:

2.3.1 to those of its Agents who strictly need to know the Confidential Information for the sole purpose set out in clause 2.2 above, provided that the Receiving Party shall ensure that such Agents are made aware prior to the disclosure of any part of the Confidential Information that the same is confidential and that they owe a duty of confidence to the Disclosing Party. The Receiving Party shall at all times remain liable for any actions of such Agents that would constitute a breach of this Agreement; or

2.3.2 to the extent required by law or the rules of any applicable regulatory authority, subject to clause 2.4 below.

2.4 In the event that the Receiving Party is required to disclose any Confidential Information in accordance with clause 2.3.2 above, it shall promptly notify the Disclosing Party and cooperate with the Disclosing Party regarding the form, nature, content and purpose of such disclosure or any action which the Disclosing Party may reasonably take to challenge the validity of such requirement.

2.5 In the event that any Confidential Information shall be copied, disclosed or used otherwise than as permitted under this Agreement then, upon becoming aware of the same, without prejudice to any rights or remedies of the Disclosing Party, the Receiving Party shall as soon as practicable notify the Disclosing Party of such event and if requested take such steps [including the institution of legal proceedings] as shall be necessary to remedy [if capable of remedy] the default and/or to prevent further unauthorised copying, disclosure or use.

2.6 All Confidential Information shall remain the property of the Disclosing Party and its disclosure shall not confer on the Receiving Party any rights, including intellectual property rights over the Confidential Information whatsoever, beyond those contained in this Agreement.

3. RECORDS AND RETURN OF INFORMATION

3.1 The Receiving Party agrees to ensure proper and secure storage of all Information and any copies thereof.

3.2 The Receiving Party shall keep a written record, to be supplied to the Disclosing Party upon request, of the Confidential Information provided and any copies made thereof and, so far as is reasonably practicable, of the location of such Confidential Information and any copies thereof.

3.3 The Company shall, within 7 [seven] days of receipt of a written demand from Transnet:

3.3.1 return all written Confidential Information [including all copies]; and

3.3.2 expunge or destroy any Confidential Information from any computer, word processor or other device whatsoever into which it was copied, read or programmed by the Company or on its behalf.

3.4 The Company shall on request supply a certificate signed by a director as to its full compliance with the requirements of clause 3.3.2 above.

4. ANNOUNCEMENTS

4.1 Neither party will make or permit to be made any announcement or disclosure of its prospective interest in the Bid without the prior written consent of the other party.

4.2 Neither party shall make use of the other party's name or any information acquired through its dealings with the other party for publicity or marketing purposes without the prior written consent of the other party.

5. DURATION

The obligations of each party and its Agents under this Agreement shall survive the termination of any discussions or negotiations between the parties regarding the Bid and continue thereafter for a period of 5 [five] years.

6. PRINCIPAL

Each party confirms that it is acting as principal and not as nominee, agent or broker for any other person and that it will be responsible for any costs incurred by it or its advisers in considering or pursuing the Bid and in complying with the terms of this Agreement.

7. ADEQUACY OF DAMAGES

Nothing contained in this Agreement shall be construed as prohibiting the Disclosing Party from pursuing any other remedies available to it, either at law or in equity, for any such threatened or actual breach of this Agreement, including specific performance, recovery of damages or otherwise.

8. PRIVACY AND DATA PROTECTION

8.1 The Receiving Party undertakes to comply with South Africa's general privacy protection in terms Section 14 of the Bill of Rights in connection with this Bid and shall procure that its personnel shall observe the provisions of such Act [as applicable] or any amendments and re-enactments thereof and any regulations made pursuant thereto.

8.2 The Receiving Party warrants that it and its Agents have the appropriate technical and organisational measures in place against unauthorised or unlawful processing of data relating to the Bid and against accidental loss or destruction of, or damage to such data held or processed by them.

9. GENERAL

9.1 Neither party may assign the benefit of this Agreement, or any interest hereunder, except with the prior written consent of the other, save that Transnet may assign this Agreement at any time to any member of the Transnet Group.

9.2 No failure or delay in exercising any right, power or privilege under this Agreement will operate as a waiver of it, nor will any single or partial exercise of it preclude any further exercise or the exercise of any right, power or privilege under this Agreement or otherwise.

9.3 The provisions of this Agreement shall be severable in the event that any of its provisions are held by a court of competent jurisdiction or other applicable authority to be invalid, void or otherwise unenforceable, and the remaining provisions shall remain enforceable to the fullest extent permitted by law.

9.4 This Agreement may only be modified by a written agreement duly signed by persons authorised on behalf of each party.

9.5 Nothing in this Agreement shall constitute the creation of a partnership, joint venture or agency between the parties.

9.6 This Agreement will be governed by and construed in accordance with South African law and the parties irrevocably submit to the exclusive jurisdiction of the South African courts.

oooOOOooo

TRANSNET HEALTH AND SAFETY COMPLIANCE SPECIFICATIONS FOR CONTRACTORS

CONTRACT NAME:	Provision of aluminothermic welding services for cut out removal and casting of welds	
CONTRACT NUMBER:		
CONTRACT SCOPE:	Remove defective welds and insert closure, casting new welds. Provide skilled labour and all necessary equipment to perform aluminothermic welding. All welding to comply with specifications and procedures. Implement a robust quality control to ensure integrity and durability of all welds.	
CONTRACT LOCATION:	Ore Corridor, Saldanha Upington	
CONTRACT DURATION:	Six months as and when required	
CONTRACT MANAGER:	Vrishnee Maharaj	
TFR CONTRACT REPRESENTATIVE / TECHNICAL OFFICER:	Vrishnee Maharaj	
CHS AGENT:	N/A	
SHE SPECIFICATION APPROVAL		
	NAME:	**SIGNATURE:**
TFR CONTRACT MANAGER / CONTRACT REPRESENTATIVE	Vrishnee Maharaj	…… **DATE:**
RISKSPECIALIST/ MANAGER	Elekanyani Phundulu	…… **DATE:**
CHS AGENT / SAFETY SPECIALIST / MANAGER	Kedibone Moselane	…… **DATE:**

©Transnet SOC Ltd

Contractor Health and Safety Specification

Table of Contents

1. Purpose 5

2. Scope 5

3. Definitions 5

4. Abbreviations 10

5. SHE Management Plan 10

6. Policy 12

7. Hazard Identification and Risk Assessment. 12

7.1 Baseline Risk Assessments 12
7.2 Task-Based Risk Assessments 12
7.3 Pre-Task Hazard Assessments 13

8. Legal and Other Requirements 13

9. Objectives 13

10. Resources, Accountabilities and Responsibilities 14

10.1 Contractor Construction Manager 14
10.2 Contractor Health and Safety Officers 15
10.3 Contractor Supervisors 15
10.4 Health and Safety Representatives 15
10.5 First Aiders 16
10.6 Duties of Client 16
10.7 Operational legal appointment letters 16

11. Cost of health and safety 17

12. Competence, Training and Awareness 17

12.1 Specific Training and Competency Requirements 18

13. Communication, Participation and Consultation 19

13.1 Toolbox Talks 19
13.2 Daily Safe Task Instructions (DSTI's) 19
13.3 Suggestions 19
13.4 Meetings 19
13.4.1 Contractor health and safety (OHS Act Section 19) 19
13.4.2 Site Meetings 20
13.5 Health and Safety Notice Boards 20
13.6 Involvement (Other) 20

14. Documentation and Document Control 20

©Transnet SOC Ltd

14.1 Contractor compliance File Requirements (Health and Safety File) 21
15. Notification of Construction Work 22
16. Operational Control 22
16.1 Safe Work Procedures 22
16.2 National Railway Safety Regulator Act / Railway Safety 23
16.3 Planned Task Observations 23
16.4 General Rules of Conduct 23
16.5 Site Access 24
16.6.1 Access Control 24
16.5.2 Trespassing 24
16.5.3 Visitors 25
16.5.4 Alcohol, Drugs and Other Intoxicating Substances 25
16.5.5 Firearms, Ammunition and Offensive Weapons 25
16.5.6 Vehicles 26
16.5.7 Tyre and Rim Safety 26
16.5.8 Roads26
16.6 Signs and Notices 27
16.7 Machinery 27
16.8 Barricading 28
16.9 Working from fall risk position (working at heights) 29
16.9.1 Fall protection 29
16.9.2 Falling Objects 32
16.9.3 Ladders 32
16.10 Permit to Work 34
16.11 Isolation and Lockout 36
16.11.1 Personal Locks 38
16.12 Electrical Safety 39
16.12.1 Electrical Installations 39
16.12.2 Arc Flash Safety 42
16.12.3 High Voltage Power Lines 42
16.12.4 Portable Electrical Equipment 43
16.13 Confined Spaces 46
16.14 Electrically Powered Tools and Equipment 48
16.15 Pneumatically Powered Tools and Equipment 49
16.16 Hydraulically Powered Tools and Equipment 50
16.17 Hand Tools 50
16.17.1 Stanley Knives / Utility Knives 51
16.18 Inspection of Equipment and Tools 51
16.19 Manual Handling and Vibration 51
16.20 Personal Protective Equipment 52
16.20.1 Head Protection 53
16.20.2 Eye Protection 54
16.20.3 Hearing Protection 54
16.20.4 Respiratory Protection 55
16.20.5 Hand and Arm Protection 57
16.20.6 Foot Protection 57

©Transnet SOC Ltd

16.20.7 Clothing 57
16.20.8 Body Protection 58
16.20.9 Electrical Protective Equipment 58
16.20.10 Jewellery 59
16.20.11 Hair 59
16.20.12 Task-Specific PPE 59
16.21 Sun Protection 60
16.22 Fuel / Flammable Liquid Storage and Refuelling 60
16.23 Fire Protection and Prevention 62
16.24 Smoking 64
16.25 Housekeeping 65
16.26 Waste Management 65
16.27 Stacking and Storage 66
16.28 Demarcation 66
16.29 Facilities 66
16.30 Occupational Hygiene 67
16.31 Lighting 68
16.32 Hearing Conservation 69
16.33 Particulate and Gas / Vapour Exposures 70
16.33.1 Respiratory Protection Devices 72
16.33.2 Asbestos and Non-asbestos Fibrous Silicates 73
16.34 Hazardous Chemical Substances 73
16.35 Radiation 76
16.36 Thermal Stress 77
16.37 Fitness for Work and Fatigue Management 78
16.38 Legionnaires Disease 81
16.39 HIV / AIDS 81

17. Structure 82

18. Emergency Preparedness and Response 82

18.1 First Aid Kits 84

19. Management of Change 84

20. Sub-contractor Alignment / Stakeholder management 85

21. Section 37(2) Mandatary Agreement 85

22. Incident Reporting and Investigation 86

23. Non-conformance and Action Management 87

24. Performance Assessment and Auditing 88

24.1 Reporting on Performance 88
24.2 Audits and Inspections 89

25. Confidentiality 90

©Transnet SOC Ltd

1. Purpose

This specification identifies and encompass the working behaviours and safe work practices that are expected of all Transnet SOC Ltd employees, Contractors, Consultant, Visitors and Suppliers, engaged on Transnet managed contracts as required by Occupational Health and Safety Act 85 of 1993, Construction Regulation of 2014, National Railway Safety Regulator Act 16 of 2000 (including applicable SANS standards) and Transnet Contractor Management Procedure.

All contractors and service providers must take careful note of these requirements and must ensure that adequate provision has been made to ensure compliance. This Specification has been compiled to cover a wide range of construction/ work activities. In order to determine which requirements are applicable, the contractor must conduct a health and safety risk assessment specific to the project and specific to the contractor's scope of work. All applicable requirements must be addressed in the Contractor's Health and Safety Management Plan.

This Specification will be reviewed and updated periodically as and when necessary to address and / or include:

Changes in legislation;

Client requirements;

Leading practices; and

Lessons learnt from incidents.

The specification provides the minimum site specific specification requirements.

2. Scope

This Specification applies to all work sites, and to all persons working on or visiting the Transnet managed work sites. The requirements specified in this document are applicable to the contractor as well as any sub-contractors, EPCM Contractors, Consultant, Vendors and Visitors that may be appointed by Transnet as an Employer. It is the contractor's responsibility to ensure that all sub-contractors comply fully with all legal requirements as well as the requirements of this health and safety specification.

3. Definitions

Acceptable Risk

A risk that has been reduced to a level that can be tolerated having regard for the applicable legal requirements and the Health and Safety Policy adopted for the project.

ALARP (As Low As Reasonably Practicable)

The concept of weighing a risk against the sacrifice needed to implement the measures necessary to avoid the risk. With respect to health and safety, it is assumed that the measures should be implemented unless it can be shown that the sacrifice is grossly disproportionate to the benefit.

©Transnet SOC Ltd

Applicant (Permit to Work)

A person requesting permission to perform work for which a Permit to Work is required. Applicants must be authorised (in writing) to receive (or accept) Permits to Work and must be competent to do so by virtue of their training, experience and knowledge of the area or plant in which the work is to be performed.

Authorised Person (Permit to Work)

A person (typically a Project employee or an employee of the client) who has been authorised (in writing) by the Transnet Contract Manager to issue Permits to Work within the scope of his designation. A person may only be appointed to issue Permits to Work if he has undergone training and has been assessed and found competent in systems, plant and equipment operation within the scope of his designation.

Consequence

The outcome of an event expressed qualitatively or quantitatively.

Contractor

An employer (organisation) or a person who performs ANY work and has entered into a legal binding business agreement contract to supply a product or provide services to Transnet. This applies to the Suppliers, Vendors, and Consultants, Service providers or Contractors performing construction work (includes Principal Contractor)

NB: A Contractor is an employer in his/her own right

Contract Manager

Transnet employee appointed to liaise with the contractor to ensure that the specifications of the contract are met (with special emphasis on safety, technical specifications, inspection of quality and quantity of work). It includes a Technical Officer, Depot Engineering Manager, Engineering Technician, Engineer, Maintenance Supervisor's etc

Competent Person

A person who has in respect of the work or task to be performed the required knowledge, training, experience and qualification (as per Construction Regulation, 2014).

Confined Space

An enclosed, restricted or limited space in which because of its construction, location or contents, or any work activity carried on therein, a hazardous substance may accumulate or an oxygen deficient atmosphere may occur, and includes any chamber, tunnel, pipe, pit sewer, container, valve, pump, sump, or similar construction, equipment, machinery or object in which a dangerous concentration of gas, vapour, dust or fumes may be present.

Construction Supervisor

A competent person responsible for supervising construction activities on a construction site

Clearance Certificate

©Transnet SOC Ltd

A signed declaration by an Isolation Officer that a specified hazardous energy source associated with a particular system, plant or item of equipment has been isolated in accordance with an approved Isolation and Lockout Procedure.

Discipline Lock (many locks with a restricted number of identical keys)

Attached at a Lockout Station or at a Local Isolation Point in order to lock out a system, plant or equipment. A Discipline Lock (e.g. A Low Voltage Electricity Discipline Lock) is owned by an Isolation Officer who has been authorised in writing to isolate and lockout a particular hazard (e.g. Low voltage electricity).

Equipment Lock (many locks with one unique key)

Attached directly to pieces of equipment in order to lock them out. Equipment Locks may only be used by Isolation Officers who have been authorised in writing to perform isolation and lockout procedures. The key must have a solid key ring that fits over an Isolation Bar.

First-Aid Injury (FA)

A first-aid injury is any one time treatment and any follow up visit for observation of minor scratches, cuts, burns, splinters and the like which do not normally require medical care. Such treatment is considered to be first aid even if administered or supervised by a medical practitioner. First aid includes any hands on treatment given by a first aider. (E.g. Band-Aid, washing, cleansing, pain, relief).

Rail Road Vehicle

Means a vehicle that can travel on rail and road

Hazard

A source of potential harm in terms of human injury or ill health, or a combination of these.

Hierarchy of Controls

A sequence of control measures, arranged in order of decreasing effectiveness, used to eliminate or minimise exposure to workplace health and safety hazards:

Elimination – Completely removing a hazard or risk scenario from the workplace.

Substitution – Replacing an activity, process or substance with a less hazardous alternative.

Isolation (Engineering) Controls – Isolating a hazard from persons through the provision of mechanical aids, barriers, machine guarding, interlocks, extraction, ventilation or insulation.

Administrative Controls – Establishing appropriate policies, procedures and work practices to reduce the exposure of persons to a hazard. This may include the provision of specific training and supervision.

Personal Protective Equipment – Providing suitable and properly maintained PPE to cover and protect persons from a hazard (i.e. Prevent contact with the hazard).

Isolation and Lockout Procedure

©Transnet SOC Ltd

A plant or equipment-specific procedure that describes the method, and sequence to be followed, for rendering equipment, plant and systems safe to work on.

Isolation Bar

A device used at a Lockout Station to which anyone is able to attach a Personal Lock making it impossible for an Isolation Officer to remove the key to the Equipment Locks, thus preventing the de-isolation of a system, plant or equipment while it is still being worked on. A Discipline Lock must always be the first lock attached to an Isolation Bar and last to be removed.

Isolation Officer

A person (typically a Project employee or an employee of the client) who has been authorised (in writing) by the Transnet Contract Manager to perform isolation and lockout procedures. A person may only be appointed as an Isolation Officer if he has undergone training and has been assessed and found competent in the isolation and lockout of systems, plant and equipment within the scope of his designation.

Incident

An event (or a continuous or repetitive series of events) that results or has the potential to result in a negative impact on people (employees, contractors and visitors), the environment, operational integrity, assets, community, process, product, legal liability and / or reputation.

Likelihood

A description of probability or frequency, in relation to the chance that an event will occur.

Lost Time Injury (LTI)

Any occurrence that resulted in a permanent disability or time lost from work of one day/shift or more.

If an employee is injured and cannot return to work in the next shift (will ordinarily miss one whole shift), and the department brings the employee in to only receive treatment by the Supervisor/ Return to Work Coordinator in that shift, this is still considered an LTI.

Lost Time Injury Frequency Rate (LTIFR) - Number of LTI's multiplied by 1 million or 200,000 and divided by labour hours worked.

Light Vehicle

A vehicle that:

Can be licensed and registered for use on a public road;

Has four or more wheels, and seats a maximum of 12 adults (including the driver);

Requires the driver to hold only a standard civil driving licence; and

Does not exceed 4.5 tonnes gross vehicle mass (GVM), which is the maximum loaded mass of the motor vehicle as specified by:

The vehicle's manufacturer; or

©Transnet SOC Ltd

An approved and accredited automotive engineer, if the vehicle has been modified to the extent that the manufacturer's specification is no longer appropriate.

Examples of light vehicles include passenger cars, four-wheel drive vehicles, sports utility vehicles (SUVs), pick-ups, minibuses, and light trucks.

Any vehicle falling outside of this definition must be considered mobile equipment.

Medical Treatment Injury (MTI)

A work injury requiring treatment by a Medical Practitioner and which is beyond the scope of normal first aid including initial treatment given for more serious injuries. The procedure is to be of an invasive nature (e.g. Stitches, removal of foreign body).

Near Hit

An incident that has occurred that did not result in any injuries, illnesses, environmental or property damage but had the potential to cause an injury, illness, environmental or property damage.

Occupational Health Practitioner

An occupational medicine practitioner or a person who holds a qualification in occupational health recognised as such by the South African Medical and Dental Council as referred to in the Medical, Dental and Supplementary Health Service Professions Act, 1974 (Act No. 56 of 1974), or the South African Nursing Council as referred to in the Nursing Act, 1978 (Act 50 of 1978)

Personal Lock

A single lock with one unique key controlled by the owner. Used for personal protection.

Principal contractor

An employer appointed by the client to perform construction work

Regulation

In the context of this guideline, 'Regulation(s)' refers to the Construction Regulations, 2014 required by Section 43 of the Occupational Health and Safety Act 85 of 1993, published under Government Notice R 84 in Government Gazette 37305 of February 2014.

Risk

A combination of the likelihood of an occurrence of a hazardous event or exposure and the severity of injury or ill health that can be caused by the event or exposure.

Risk Assessment

A process of evaluating the risk arising from a hazard, taking into account the adequacy of any existing control measures, and deciding on whether or not the risk is acceptable.

Risk Management

The systematic application of management policies, processes and procedures to identifying hazards, analysing and evaluating the associated risks, determining whether the risks are acceptable, and controlling and monitoring the risks on an ongoing basis.

©Transnet SOC Ltd

4. Abbreviations

DSTI - Daily Safety Task Instruction

CR – Construction Regulations

EPCM - Engineering Procurement and Construction Management

HIRA - Hazard Identification and Risk Assessment

HEALTH AND SAFETY - Integrated Management System

MS - Management System

OHS Act - Occupational Health and Safety Act

SOC - Safety Observation and Conversation

VFL - Visible Felt Leadership

OHS - Occupational Health and Safety

SACPCMP - The South African Council for Project and Construction Management Professions,

5. SHE Management Plan

The contractor must prepare, implement and maintain a contract-specific SHE Management Plan. The plan must be based on the requirements set out in this specification, risk assessment as well as all applicable legislation. It must cover all activities that will be carried out on the project site(s), from mobilisation and set-up through to rehabilitation and decommissioning.

The plan must demonstrate the contractor's commitment to HEALTH AND SAFETY and must, as a minimum, include the following:

A copy of the contractor's Health and Safety Policy;

Procedures concerning Hazard Identification and Risk Assessment, including both Baseline and Task-Based Risk Assessments;

Arrangements concerning the identification of applicable Legal and Other Requirements, measures to ensure compliance with these requirements, and measures to ensure that this information is accessible to relevant personnel;

Details concerning Health and Safety Objectives – a process must be in place for setting objectives (and developing associated action plans) to drive continual improvement;

Details concerning Resources, Accountabilities and Responsibilities – this includes the assignment of specific health and safety responsibilities to individuals in accordance with legal or project requirements, including the appointment of a Project Manager, Health and Safety Officers, Supervisors, Health and Safety Representatives, and First Aiders;

Details concerning Competence, Training and Awareness – a system must be in place to ensure that each employee is suitably trained and competent, and procedures must be in place for identifying training needs and providing the necessary training;

©Transnet SOC Ltd

Communication, Participation and Consultation arrangements concerning health and safety, including Safety Observations and Coaching, Toolbox Talks, Daily Safe Task Instructions, project health and safety meetings, and notice boards;

Documentation and Document Control – project-specific documentation required for the effective management of health and safety on the project must be developed and maintained, and processes must be in place for the control of these documents;

Processes and procedures for maintaining Operational Control, including rules and requirements (typically contained in Safe Work Procedures) for effectively managing health and safety risks, particularly critical risks associated with working at heights, confined spaces, mobile equipment and light vehicles, lifting operations, hazardous chemical substances, etc.;

Emergency Preparedness and Response procedures;

Management of Change – a process must be in place to ensure that health and safety risks are considered before changes are implemented;

Sub-contractor Alignment procedures – a process must be in place for the assessment of sub-contractors and suppliers with regard to health and safety requirements and performance (before any contract or purchase order is awarded);

Measuring and Monitoring plans, including a plan for the measuring and monitoring of employee exposure to hazardous substances or agents (e.g. Noise, dust, etc.) In order to determine the effectiveness of control measures;

Incident Reporting and Investigation procedures describing the protocols to be followed with regard to incident reporting, recording, investigation and analysis;

Non-conformance and Action Management procedures concerning the management of corrective actions;

Performance Assessment and Auditing procedures concerning health and safety performance reporting, monthly internal audits to assess compliance with the project health and safety requirements, and daily site health and safety inspections; and

Details concerning the Management Review process followed to assess the effectiveness of health and safety management efforts.

Prior to mobilisation, the SHE Management Plan must be forwarded, to the Transnet Contract Manager for review. The plan will be audited for completeness and, if found to be adequate, will be accepted (typically "with comments"). Work may not commence until the plan has been accepted.

Any proposed amendments or revisions to the contractor's SHE Management Plan must be submitted to the TFR Contract Manager for acceptance.

Should it be identified that the contractor has overlooked a high risk activity, and as a result has omitted the activity and associated control measures from the SHE Management Plan, the plan will not be approved.

©Transnet SOC Ltd

6. Policy

The contractor must develop, display and communicate a Health and Safety Policy that clearly states the contractor's values and objectives for the effective management of health and safety as required by OHS Act of 1993, 7(3) and SANS 3000-1:2016.

The policy must be signed and dated, and must be reviewed annually. The policy must commit to:

Compliance with all applicable legal requirements;

The effective management of health and safety risks;

The establishment of measurable objectives for improving performance, and the provision of the necessary resources to meet these objectives;

The prevention of incidents; and

Achieving continual improvement with regard to health and safety performance.

All employees of the contractor as well as the employees of any sub-contractors that may be appointed by the contractor must be made aware of the policy. This must be done through Health and Safety Induction Training and Toolbox Talks.

A copy of the policy must be displayed.

7. Hazard Identification and Risk Assessment.

Detailed hazard identification and risk assessment processes must be followed for all work to be performed as well as for all associated equipment and facilities as required by legislation.

7.1 Baseline Risk Assessments

- The client must conduct a detailed Baseline Risk Assessment identifying foreseeable hazards and risk scenarios associated with the contractor's scope of work on the work site(s) as required by legislation and Transnet Contractor Management Procedure. The baseline risk assessment shall be used to develop this specification.

7.2 Task-Based Risk Assessments

- The contractor must ensure that effective procedures and risk assessment processes are in place to control hazards and to mitigate risks to levels that are as low as is reasonably practicable.
- The contractor must carry out detailed project-specific Task-Based Risk Assessments which must be facilitated by a competent person who has been appointed in writing. The contractor's site management representatives, supervisory personnel, technical experts (as required) and workforce personnel directly involved with the task being examined must participate in the risk assessment process. An attendance register must be completed and retained.

A Task-Based Risk Assessment must at least:

- Be accompanied by a Work Method Statement (describing in sufficient detail how the specific job or task is to be performed in a logical and sequential manner);
- Provide a breakdown of the job or task into specific steps;

©Transnet SOC Ltd

- Identify the hazards and potential risk scenarios associated with each step;
- Include consideration of possible exposure to noise, heat, dust, fumes, vapours, gases, chemicals, radiation, vibration, ergonomic stressors, or any other occupational health hazard or stressor;
- Describe the control measures that will be implemented to ensure that the risks are managed to levels that are as low as is reasonably practicable; and
- Assign an initial risk rating (without taking any control measures into consideration) and a residual risk rating (taking the identified control measures into consideration) to each risk scenario.

A Task-Based Risk Assessment must be reviewed and, if necessary, updated:

- On an annual basis (as a minimum);
- When changes are made to the associated Work Method Statement;
- Legislative changes; and
- Following an incident.

7.3 Pre-Task Hazard Assessments

A pre-task hazard assessment must be completed before commencement of a task or whenever a change is identified while carrying out an activity. Before carrying out the particular task that involves the identified change, a few minutes must be spent identifying the hazards and risks associated with that task as well as suitable control measures. Any deviation from what was discussed during the Daily Safe Task Instruction (prior to the activity commencing), or anything that was not discussed, constitutes a change.

8. Legal and Other Requirements

The Contractor must comply with the requirements of all applicable legislation as well as Transnet and contract-specific standards and procedures as amended from time to time.

The Contractor must compile and maintain a register of all legal and other requirements applicable to the work that will be carried out and / or services that will be provided. This register must be updated regularly to ensure that it remains relevant.

Applicable laws and standards must be appropriately communicated to all employees of the contractor (as well as the employees of any sub-contractors that may be appointed by the contractor) through training, Toolbox Talks, and Daily Safe Task Instructions.

The Contractor shall submit proof of registration and Letter of Good Standing with the compensation fund or with a licensed compensation insurer as contemplated in the Compensation for Occupational Diseases Act , 1993 (Act No. 130 of 1993) for his company and each of his sub-contractors'.

No contractor may do any work for TFR without a valid letter of good standing. The Contractor must ensure that the Letter of Good Standing remains valid for the duration of the contract period. The letter of good standing must reflect the name of the Contractor and/or Sub-contractor, registration number and, expiry date

9. Objectives

In order to drive continual improvement, the contractor must set contract-specific and measurable objectives, and develop improvement action plans to achieve these objectives. These objectives must be aligned with the objectives set for the contract as a whole.

©Transnet SOC Ltd

Eliminating hazards, minimising risks, preventing incidents, injuries and illnesses, and ensuring legal compliance must be the primary considerations for setting objectives.

When setting objectives, consideration must be given to the following:

- Leading indicators such as inspection findings, audit findings, hazard reporting, and observations;
- Lagging indicators (i.e. Incidents including Near Hits);
- Leading practices and lessons learnt; and
- Injury frequency rates with due understanding that the goal is "no harm".

The improvement action plans must specify adequate resources required to achieve the objectives, the person's responsible, and realistic timeframes for completion.

The objectives and associated improvement action plans must be documented and communicated to all contractor employees. Furthermore, to ensure that the objectives remain relevant, they must be reviewed on a yearly basis and whenever significant change has taken place (i.e. Changes to activities, scope of work, operating conditions, etc.).

Performance reviews must be carried out at quarterly intervals to assess and document performance against these personal or team objectives.

If a reward or incentive scheme is introduced, it must be designed in such a manner that health and safety performance is not compromised in order to maximise financial reward.

10. Resources, Accountabilities and Responsibilities

The Contractor must adequately allocate resources, responsibility and accountability to ensure the effective implementation, maintenance and continual improvement of the contractor's HEALTH AND SAFETY management system for the contract. The contractor must comply with the requirements of all applicable legislation concerning health and safety related appointments and delegations for the contract

An organogram specific to the contract must be documented and maintained. All roles that carry HEALTH AND SAFETY accountability and / or responsibilities must be included, and all individuals that carry health and safety appointments must be clearly identified and appointed in writing. Documented proof of each appointment must be retained.

The contractor's managers and supervisors at all levels must demonstrate their commitment and support by adopting a risk management approach to all health and safety issues. These individuals must consistently take immediate and firm action to address violations of health and safety rules, and must actively participate in day to day activities with the objective of preventing harm.

The contractor's management representatives are responsible and accountable for health and safety performance. All costs associated with meeting these responsibilities shall be borne by the contractor.

Any cost associated with any work stoppage due to non-compliance with a health and safety requirement shall be for the contractor's account.

10.1 Contractor Construction Manager

The Contractor must appoint a competent Construction Manager who shall be responsible for the successful and safe completion of all work to be carried out by the contractor, including the duty of ensuring occupational health and safety compliance.

©Transnet SOC Ltd

The appointed Construction Manager may not manage any work on or in any site other than the site in respect of which he or she has been appointed.

The contractor must upon having considered the size of the project, in writing appoint one or more Assistant Construction Managers for different sections thereof: Provided that the designation of any such person does not relieve the Construction Manager of any personal accountability for failing in his or her management duties in terms of this regulation.

10.2 Contractor Health and Safety Officers

The contractor must appoint a full-time Construction Health and Safety Officer for the duration of the contract who is registered with the SACPCMP (The South African Council for Project Construction Management Professions).

The Construction Health and Safety Officer shall have sound knowledge of the Occupational Health and Safety Act and its regulations, SANS 3000-1:2016, National Environmental Management Act, and associate environmental requirements such as Waste and Water Acts and Hazard Identification and Risk Management processes.

The contractor must ensure that each Construction Health and Safety Officer is adequately equipped to enable him to perform his duties effectively.

10.3 Contractor Supervisors

The contractor must ensure that all works are supervised at all times by an adequate number of qualified, competent and appointed supervisors who have experience in the type of work being carried out.

No work may be carried out without an appointed supervisor being physically present in the work area and daily safety task instruction. The Construction Supervisor appointed may not supervise any work on or in any site other than the site in respect of which he or she has been appointed: Provided that if a sufficient number of competent employees have been appropriately designated under on all the relevant sites, the appointed construction supervisor may supervise more than one site.

Each supervisor must accept these responsibilities in writing as part of his appointment and must be provided with all the necessary equipment to enable him/her to perform his responsibilities.

The contractor must, upon having considered the size of the work to be performed, in writing appoint one or more competent employees for different sections thereof to assist the construction supervisor, and every such employee has, to the extent clearly defined by the contractor in the letter of appointment, the same duties as the construction supervisor: Provided that the designation of any such employee does not relieve the construction supervisor of any personal accountability for failing in his or her supervisory duties in terms of this regulation

10.4 Health and Safety Representatives

The team of employees on site must have a health and safety representative deployed on the work site(s), a Health and Safety Representative must be elected and appointed. Taking into consideration the number of employees deployed, the geographical area in which the work is taking place, the different work disciplines, and the shift pattern (if applicable), the contractor must ensure that an adequate number of Health and Safety Representatives (at a minimum ratio of one Health and Safety Representative per 50

©Transnet SOC Ltd

employees) are elected and appointed to effectively represent all site personnel as required by the OHS Act 85 of 1993, section 17 - 18.

Each Health and Safety Representative must attend a training course for health and safety representatives. The cost of this training shall be for the contractor's account.

The contractor must make the necessary allowances for the Health and Safety Representatives to carry out their duties as specified in the applicable legislation.

The contractor must ensure that an appropriate method of identification of each Health and Safety Representative by employees on site.

10.5 First Aiders

The Contractor shall ensure that their employees receive prompt first aid treatment in case of injury or emergency. The Contractor must have the necessary equipment and/or facility on site for treatment of injured persons.

If 10 or more employees are deployed on the work site(s), at least one trained and competent First Aider must be in place and appointed. Taking into consideration the number of employees deployed, the geographical area in which the work is taking place, the different work disciplines, and the shift pattern (if applicable), the contractor must ensure that an adequate number of First Aiders (at a minimum ratio of one First Aider per 50 employees) are in place and have been appointed to administer first aid treatment should this be required.

First Aid training must be done through an accredited training institution. The cost of this training shall be for the contractor's account.

The contractor must ensure that an appropriate method of identification of each First Aider by employees.

10.6 Duties of Client

Transnet shall perform the duties of a client/operator as per the Construction Regulations of 2014, National Safety Regulator Act 16, SANS 3000-1:2016 and Transnet Contractor Management Procedure.

Transnet shall appoint a Construction Health and Safety Agent who is registered with the SACPCMP who shall ensure that the duties of Transnet as the client as per Construction Regulation 5 are performed and complied with. The Construction Health and Safety Agent, must be involved in all stages of contract management and take charge of all the health and safety related matters on behalf of Transnet.

10.7 Operational legal appointment letters

The contractor must ensure other legal appointment letter are compiled and be submitted with the Contractor compliance plan. Below is some appointment required as per the legislation, the appointment letters varies based on the scope of work;

- OHSA Sec 16(2)
- Sec 17,18,19 SHE Representative
- GSR 3(4) First Aider
- GAR 9(2) Incident investigator

©Transnet SOC Ltd

- GMR 2(1) Supervisor of machinery
- GMR 2(7) Assistant Supervisor of machinery
- CR 4(1)(c) Principal Contractor
- CR 8(1) Construction Manager
- CR 8(2) Assistant Construction Manager
- CR 8(7) Construction Supervisor
- CR 8(8) Assistant Supervisor of construction work
- CR 8(5) Construction Health and Safety Officer
- CR 9(1) Construction Risk Assessor
- CR 10(1)(a),(b) Fall protection plan
- Developer
- CR 10(2)(d) Inspector of fall arrest system
- CR 14(2) Scaffolding Supervisor
- DMR 17(2),18 Inspector of lifting machinery
- CR17(8) Material hoist Inspector
- CR 19(2)(g)(i) Explosive powered tool issuer
- CR 23(1)(k) Construction vehicle and mobile plant Inspector
- CR 24(d) Temporary Electrical Installation Controller
- CR 24(e) Temporary Electrical Installation Inspector
- CR 28(a) Stacking and storage Supervisor
- CR 29(h) Fire extinguisher inspector
- EMR 8(8) Appointment for electrical installation in hazardous location- Master Electrician (Inspector)
- EIR 9 Installation Electrician appointment

11. Cost of health and safety

The Contractor shall ensure that it has made adequate provision for the cost of health and safety measures in the tender offer. The Contractor shall ensure that its subcontractors have made adequate provision for the cost of health and safety measures in the tender offer.

12. Competence, Training and Awareness

Each employee (including sub-contractor employees) must be suitably trained and competent, and must understand the health and safety hazards, risks and control measures associated with his work.

The contractor must implement systems and procedures to ensure that the necessary competencies required by employees are identified (by occupation), along with selection, placement and any training requirements;

Please Note: Specific competency profiles and selection criteria (fitness for work) must be developed for all roles where significant health or safety risk exists.

Please Note: A formal training needs analysis must be carried out based on the competency profiles and a training matrix must be developed for the scope of work.

Roles requiring technical certification, registration or licensing are identified and documented, and these roles are filled only by suitably qualified personnel;

©Transnet SOC Ltd

All employees hold and maintain the required competencies and are under competent supervision. Refresher training is carried out as required. Records of education, qualifications, training, experience and competency assessments are maintained on site for all employees. The effectiveness of training is reviewed and evaluated;

Prior to the commencement of any work, including mobilisation and site set-up activities, the contractor must provide, to the satisfaction of the nominated contract management representative, current documentation verifying that the contractor's employees, as well as the employees of any appointed sub-contractors, are competent and have the necessary qualifications, certificates, licences, job skills, training and experience (as required by this specification and applicable legislation) to safely carry out the work that is to be performed.

The Contractor and sub-contractor must ensure that all identified training as per training matrix takes place.

A contractor must at all times keep on his or her work site, records of the health and safety induction training and such records must be made available on request to an inspector, the client, the client's agent or the principal contractor;.

An Employee Profile (dossier) must be completed for each employee who will be performing work on site. All documentation pertaining to an employee's competence (i.e. certified copies of qualifications, certificates and licences as well as proof of job skills, training and experience) must be maintained in this dossier.

If it is determined through observation that an employee is not yet competent to carry out a particular task in a safe and capable manner, the employee will be required to cease work immediately and must either be reassigned or be retrained at the contractor's expense.

The contractor must ensure that the training institutions and trainers that are used are appropriately registered with a governing authority. Foreign qualifications held by employees in health and safety critical roles must be verified against the requirements of local legislation.

Induction Training

Each employee must attend all mandatory induction Training applicable to the work activities and Health and safety induction training pertaining to the hazards prevalent on the site at the time of entry. No employee will be permitted to enter any work site until he has attended this training. The contractor must keep the proof of induction on the contractor compliance file.

Furthermore, employees must attend (where applicable) Area/job-Specific Training pertaining to the particular hazards identified in the area(s) where the employees will be working. No employee will be permitted to enter a work area until he has attended the relevant area/job-specific training.

12.1 Specific Training and Competency Requirements

An employee must be trained, assessed and found competent before he will be given authorisation to perform certain tasks or fill certain roles.

©Transnet SOC Ltd

The contractor shall make arrangements with the Transnet Contract Manager for training that are only offered or unique to Transnet. Such training shall be for the cost of the contractor.

13. Communication, Participation and Consultation

The contractor must establish and maintain effective communication and consultative processes for the duration of the contract to ensure that employees are kept up to date with regard to critical, health and safety related information and prompt feedback is provided.

13.1 Toolbox Talks

The contractor must prepare a Toolbox Talk on a weekly basis and must share it with all personnel for which the contractor is responsible (including all sub-contractors). Toolbox Talks must address health and safety issues that are relevant to the work performed on the work site(s) and must include information and / or knowledge sharing, lessons learnt from incidents that have occurred, information concerning specific hazards and / or risks and control measures to prevent injury, etc.

Attendance records must be kept and maintained in the contractor's compliance file.

13.2 Daily Safe Task Instructions (DSTI's)

At the start of each day or shift, prior to the start of any work, each appointed supervisor must inspect the work area for which he is responsible and ensure that it is safe. He must then conduct a Daily Safe Task Instruction (DSTI) with his work team specifically concerning the tasks that they will be performing during the course of the day or shift. The relevant Task-Based Risk Assessment for the activity must be used as the basis for the discussion. The correct work method must be reiterated and the identified hazards, risks and control measures must be discussed with the team.

If the work method changes after activities have already begun, the DSTI must be revisited and updated with the team, and the changes must be signed off by the relevant contractor Construction Manager.

Every member of the work team must sign the DSTI attendance register and records must be kept and maintained in the contractor's health and safety file.

The contractor's Health and Safety Officer must evaluate the content of the DSTI's to ensure that they are task-specific.

13.3 Suggestions

All employees must be encouraged to submit suggestions to enhance health and safety management on the work site(s). A process must be in place for documenting, evaluating, implementing (as appropriate), archiving and recognising the improvement ideas.

13.4 Meetings

13.4.1 Contractor health and safety (OHS Act Section 19)

The contractor must schedule and hold health and safety meetings at least quarterly and keep minutes of each meeting and attendance records in the contractor compliance file.

The meeting must address the following as a minimum:

- New incidents for the period and corrective actions taken or to be taken;
- Implementation status of outstanding actions associated with previous incidents;

©Transnet SOC Ltd

- SOC's, PTO's and DSTI's carried out for the period and action required to correct trends identified;
- Results of any audits, inspections (including H&S Rep inspections) or site visits carried out;
- A look ahead to ensure that appropriate health and safety planning and preparation is done for upcoming work;
- Risk Assessments, Safe Work Procedures, etc. That are outstanding or due for review (as well as the quality of these documents); and
- Any other health and safety related matter.

13.4.2 Site Meetings

In addition to the contractor health and safety meetings, the Transnet Contract Manager will schedule and chair monthly Site Meetings that the contractor must attend.

The meeting will address the following as a minimum:

- Feedback from the contractor concerning health and safety performance for the period;
- New incidents for the period and corrective actions taken or to be taken;
- Implementation status of outstanding actions associated with previous incidents;
- SOC's, PTO's and DSTI's carried out for the period and action required to correct trends identified;
- Results of any audits, inspections or site visits carried out;
- A look ahead to ensure that appropriate health and safety planning and preparation is done for upcoming work;
- Risk Assessments, Safe Work Procedures, etc. That are outstanding or due for review (as well as the quality of these documents); and
- Any other health and safety related matter.

13.5 Health and Safety Notice Boards

The contractor must where practicable, provide and maintain a Performance Board that must display the health and safety performance indicators, and a site plan indicating evacuation routes and emergency assembly point locations.

13.6 Involvement (Other)

The participation of all contractor (and sub-contractor) employees in activities that promote improvements in health and safety performance must be encouraged. In particular, this must include their appropriate involvement in:

- Hazard identification, risk analysis and determining control measures;
- Incident investigation; and
- Reviewing policy and objectives.

14. Documentation and Document Control

The contractor must establish a process for the systematic control of health and safety records and related data. Controls must be in place for the creation, receipt, secure storage, maintenance, accessing, use and disposal of such records and data.
The document control process must:

- Provide for the review, revision and version control of documents;

©Transnet SOC Ltd

- Uniquely identify documents (as appropriate) to control their use and function;
- Require approval of the documents for adequacy prior to issue;
- Clearly identify changes and record the status of any revisions to documents; and
- Provide for the effective distribution of documents to, and where necessary the timely removal of obsolete documents from, all points of issue and use.

Each record must be legible, identifiable and traceable, and must contain adequate information and data for its purpose. The retention, confidentiality and security of records and data must be maintained in a manner that is appropriate for the nature of the records and data, and in accordance with any applicable data or privacy protection legislation.

Personal information originating from medical surveillance and occupational hygiene monitoring must be reported in a form that respects the privacy of the individual, but enables management to fulfil their duty of care obligations to employees.

14.1 Contractor compliance File Requirements (Health and Safety File)

The contractor must compile and maintain a file containing all necessary compliance related documentation. Transnet should provide construction work permit and to be kept on site at all times. The contents of the file will be audited by a Transnet Contract Manager or any person delegated by him on a monthly basis.

Required documentation includes, but is not limited to, the following:

- Letter of Good Standing from the Compensation Commissioner or Licensed Insurer;
- Proof of Public Liability Insurance;
- Scope of Work under the contract;
- List of Contacts and their Telephone Numbers;
- Health and Safety Policy;
- SHE Management Plan;
- Client Health and Safety Specification
- Section 37(2) Mandatory Agreement
- Legal Register;
- Organisational Chart for the contract;
- Appointment Letters (appointment of the contracting company, and appointments for all persons with health and safety related responsibilities);
- Notifications to the relevant authorities that construction work is in progress;
- Task-Based Risk Assessments;
- Health and Safety Objectives, and associated Improvement Action Plans;
- Safe Work Procedures, Work Instructions and Work Method Statements;
- Planned Task Observations;
- Fall Protection Plan (for work at height);
- A dossier (Equipment Profile) for each fuel-driven vehicle or machine;
- Inspection Registers, Forms and Checklists;
- PPE Issue Registers;
- Material Safety Data Sheets;
- Emergency Response Procedures;
- Incident Records;
- A dossier (Employee Profile) for each employee containing: a copy of the employee's Identity Document or Passport, Valid Medical Certificate of Fitness, Training Records, Certificates of Competency; and Copies of Licences;

©Transnet SOC Ltd

- Meeting Minutes;
- HEALTH AND SAFETY Performance Reports;
- Copies of Inspection and Audit Reports; and
- Daily Safe Task Instructions (DSTI's) and Toolbox Talks.

The contractor must ensure that an equivalent file is compiled and maintained by each appointed sub-contractor. A copy of the compliance file must be provided to the Transnet at the end of the contract.

15. Notification of Construction Work

A contractor who intends to carry out any construction work other than work contemplated in Construction Regulation 3(1), must at least 7 days before that work is to be carried out notify the provincial director in writing in a form similar to Annexure 2 if the intended construction work will—

- include excavation work;
- include working at a height where there is risk of falling;
- include the demolition of a structure; or
- include the use of explosives to perform construction work.

16. Operational Control

For contract operations and activities, the contractor shall implement and maintain:

- Operational controls, as applicable to the organization and its activities;
- The organization shall integrate those operational controls into its overall OH&S Management System;
- Controls related to purchased goods, equipment and services;
- Controls related to contractors and other visitors to the workplace;
- Documented procedures, to cover situations where their absence could lead to deviations from the OH&S policy and the objectives;
- Stipulated operating criteria where their absence could lead to deviations from the OH&S policy and objectives.

16.1 Safe Work Procedures

The contractor must develop, document and implement Safe Work Procedures for all activities involving significant health or safety risk. These procedures must detail the control measures required to effectively manage the health and safety risks associated with the work activities.

Each Safe Work Procedure must be consistent with the Task-Based Risk Assessment completed for the activity.

Every person engaged in an activity for which a Safe Work Procedure has been developed must receive suitable training on the procedure.

Furthermore, the contractor must develop, document, communicate and implement formal procedures, work instructions and / or programmes for the operation, maintenance,

©Transnet SOC Ltd

inspection and testing of all plant and equipment (including protective systems and devices) brought onto the project site(s).

16.2 National Railway Safety Regulator Act / Railway Safety

The Contractor shall ensure that its equipment, machinery and employees when on TFR premises complies fully with all applicable railway safety requirements and/or regulations of the National Safety Regulator Act 16 of 2002 and the relevant SANS Codes of Practice.

The Contractor when engaging subcontractor must review the capability of the proposed contractor to comply with specified railway safety requirements and/or regulations.

The Contractor and/or his subcontractors must grant TFR access, during the term of the contract, to review any railway safety related activities, including the coordination of such activities across all parts of the organisation.

The Contractor shall ensure that where applicable, such work is performed by person who has the necessary competencies as required in terms of any applicable railway safety standard or code of practice

The Contractor shall ensure that all his employees are protected from the risk of being hit by moving trains.

The Contractor shall ensure that on track machines are only operated with the Transnet Track inspector/Track master in charge of on-track machine present on the machine. Transnet Track inspector/Track master in charge of on-track machine must have passed the appropriate road knowledge, theoretical and practical examinations and must be licenced competent

16.3 Planned Task Observations

All contractor, management supervisors must perform Planned Task Observations (PTO's) to verify that the control measures that have been identified in Safe Work Procedures (and associated Risk Assessments) are being adhered to and are being properly implemented, and to provide guidance where deviations are noted.

Each supervisor must complete at least one PTO per day involving one or more employees in his work team.

When an unsafe act or condition is identified, the supervisor must coach the work team to correct the act or condition in line with the Safe Work Procedure.

Where valid changes to the work method are identified, the supervisor must ensure that the Safe Work Procedure and Risk Assessment are updated to reflect the current practice.

Transnet Contract Manager may carry out PTO's on contractor employees on an ad hoc basis. Should deviations from the contractor's Safe Work Procedures be observed, the work may be stopped until these deviations are rectified.

16.4 General Rules of Conduct

All persons are required to conform to the following rules of conduct while on the site.

The following acts are prohibited:

- Engaging in practical jokes, horseplay, scuffling, wrestling, fighting, or gambling;
- Assault, intimidation, or abuse of any person;

©Transnet SOC Ltd

- Insubordination towards any supervisor or manager;
- Refusing to carry out a reasonable and lawful instruction concerning health and safety;
- Entry into any restricted area (including barricaded areas), unless authorised to do so by the responsible person;
- Unauthorised use / operation of any equipment or machinery;
- Negligently, carelessly or wilfully causing damage to any property;
- Destroying or tampering with safety devices, signs, or signals;
- The use of water from fire hydrants or hose reels for any purpose other than extinguishing a fire;
- The wilful and unnecessary discharging of fire extinguishers;
- Refusing to give evidence or deliberately making false statements during incident investigations;
- Bringing alcohol, drugs, or any other intoxicating substance onto site;
- Bringing a firearm, ammunition, or any other offensive weapon onto site;
- Bringing animals onto site;
- Running, except in an emergency;
- The use of an ipod (or similar) whilst working on site;
- Sleeping on the job;
- Building fires on site, unless in a suitably constructed barbequing facility; and
- Pouring / pumping / flushing any substance (chemical / hydrocarbon / waste water) into a storm water drain, onto bare soil, or into any area where the substance is not effectively contained.
- Walking, sitting or sleeping on the rail
- Touching of any loose lying electric wires
- Coming into close proximity to live OHTE (maintain clearance of 3 metres)

Any of the above actions may result in the temporary or permanent removal of the offending person(s) from site, as well as possible prosecution. The decision of the Transnet Contract Manager shall be final and binding in respect of any dispute that may arise from the interpretation of these requirements.

16.5 Site Access

The Contract Manager shall issue a site access certificate to the contractor after he has evaluated and is satisfy with the contractor compliance file.

Contractor may not hire any security services for the work site unless authorisation has been obtained in writing from a Transnet Contract Manager.

16.6.1 Access Control

The contractor must comply with all access control, procedures and systems applicable to the work site. Failure to comply with these requirements will be viewed as a serious safety breach and may result in the permanent removal of the individual(s) / contracting company from site or suspension without payment.

No access card will be issued unless valid proof of identification is provided. For foreign labour, an access card will only be issued if a valid work visa is produced.

16.5.2 Trespassing

The contractor must ensure that no employee (including sub-contractor employees) trespasses on any land lying beyond the boundaries of the work site. The contractor's activities must be confined to the specified work areas, and access to these areas may

©Transnet SOC Ltd

only be by means of specified routes.

If instructed by a Transnet Contract Manager to do so, the contractor must remove any employee who fails to comply with this requirement from the work site.

16.5.3 Visitors

Visitors (including reps and suppliers) must be advised in advance of the mandatory Personal Protective Equipment (PPE) requirements for the site, and must arrive with all of this PPE.

All visitors must sign in the visitor's register and undergo a visitor induction briefing before entering the site. A visitor access card will be issued to each visitor on conclusion of the induction briefing.

Whilst on site, visitors must be accompanied at all times by an appropriately senior employee who has been inducted fully.

When leaving the site, each visitor must return his or her visitor access card to the security personnel posted at the entrance / exit. A visitor will not be permitted to leave the site until he or she produces the access card that was issued.

Note: Any request (typically made by a government official) to carry out a site inspection must be referred to the Transnet Contract Manager. The contractor must not arrange any such inspection without prior approval from the Transnet Contract Manager.

16.5.4 Alcohol, Drugs and Other Intoxicating Substances

The contractor must ensure that all personnel under his authority do not at any time enter the site or perform any work whilst under the influence of alcohol, a drug, or any other intoxicating substance. Selling or possessing drugs, alcoholic beverages or any other intoxicating substance on the site is strictly prohibited.

A drugs and alcohol testing program will be implemented. Persons entering the site will be randomly tested. Any person who tests positive for alcohol or drug consumption will be subject to disciplinary action and shall be permanently removed from the site.

Any person have the opportunity to rather report that he/she is under the influence before accessing the work site – in these case the employee may only be send home for the day but will then be tested for the following five days (each day) on his return to the site. If it is found that the same person is frequently reporting that he/she is under the influence before even accessing the work site. It shall be the responsibility of the Transnet Contract Manager to take disciplinary action and remove such a person's form the site.

Should the actions and / or demeanour of an employee suggest possible narcosis or drunkenness, the employee must be removed from the site. This may be done without testing.

Note: All personnel involved in an incident / accident must immediately be subjected to an alcohol test and a drug test as part of the investigation.

16.5.5 Firearms, Ammunition and Offensive Weapons

Firearms, ammunition, and offensive weapons of any kind are strictly prohibited. No person may enter /shall not be permitted to enter the site carrying any such item.

©Transnet SOC Ltd

16.5.6 Vehicles

All vehicles brought onto site must meet the safety requirements. All road-going vehicles used by the contractor on the site must be roadworthy and registered with the relevant traffic authority. A vehicle will not be permitted to enter the site in an un-roadworthy condition.

No vehicle shall be permitted to enter the site unless it is duly authorised. Access permits are vehicle-specific and may not be transferred between vehicles.

The contractor must allow any vehicle that is brought onto site (including privately owned vehicles) to be searched at any time while on the premises, or when entering or leaving the premises. The contractor is solely responsible for the safety and security of all vehicles (including private vehicles) that he brings onto the site.

The driver / operator of any vehicle / mobile equipment must carry a copy of his appointment with him at all times. Each driver / operator must:

- Comply with all site rules and regulations pertaining to traffic and the safe operation of vehicles / mobile equipment;
- Obey all road signs;
- Obey all instructions given by security or emergency services personnel;
- Remain within the boundaries of the site; and
- Ensure that the vehicle that he is operating is never overloaded, and that loads are always properly secured.

In the interest of safety, only the minimum number of vehicles required by the contractor to complete the work under the contract will be permitted to enter the site.

When not in operation, the contractor's vehicles / mobile equipment must be parked within the boundaries of his lay-down area or yard. Parking is only permitted in designated parking areas. All cars are parked on site at the owner's risk.

In the event of a vehicle accident on site, the driver(s) must report the incident immediately and must remain at the scene until a Transnet Contract Manager arrives, or until a Transnet Contract Manager authorises him to leave (unless, of course, the driver requires medical attention).

16.5.7 Tyre and Rim Safety

A Tyre Management Plan must be established to address issues including fire, heating, explosion, electrical contact, separations, maintenance, tyre changes, etc. and reviewed every twelve months. Safe Work Procedures must be in place for all tyre maintenance and servicing activities and for tyre fire emergency response.

16.5.8 Roads

Roads with high risks activities and traffic interface shall be controlled by trained flagman, No road may be closed without permission from a Transnet Contract Manager.

A dust control plan must be in place for the site and, in particular, for all roads. Any spillage in a roadway must be cleaned up immediately. Ground pollution (e.g. Oil, diesel or hydraulic fluid spillages) must not, and will not, be tolerated. If substances are spilled

©Transnet SOC Ltd

on a road or any other portion of the site, the contaminated ground must be dug out and the resulting hole back-filled with clean material which must be suitably compacted. The contaminated soil must be disposed of as required by the applicable legislation.

16.7.6 On track Machines

The Contractor shall ensure that On track Machine is only operated by a person who is competent and licensed to operate such machine.

The Contractor shall ensure that the machine is operated with the Transnet Track Inspector/Track Master in charge of on-track machine present on the machine. Transnet Track Inspector/Track Master in charge of on-track machine must have passed the appropriate road knowledge, theoretical and practical examinations and must be licenced competent..

The Contractor shall ensure that the machine is properly maintained and in a serviceable condition to operate on railway line.

16.6 Signs and Notices

The contractor must ensure that all required safety signs and notices comply and are prominently displayed in accordance with the applicable legislation, national standards and good safety practice.

No person may deface or damage any safety sign or notice. No person may remove or alter any safety sign or notice unless authorised to do so.

16.7 Machinery

The contractor must ensure that all plant and equipment brought onto the site is:

- Appropriate for the type of work to be performed
- Approved, inspected, tested, numbered and tagged (if appropriate) before being brought onto site
- Properly maintained in accordance with the manufacturer's recommendations; and
- Placed on a register and checked at least once per month or as required by the applicable legislation.
- Only operated by persons who have been trained to operate such machinery.

The contractor must supply, at his cost, all items of plant and equipment necessary to perform the work and must maintain all items in good working order. Should any plant or equipment become inoperable for a period that is having or will have a significant impact on the work schedule, the contractor must, on instruction from the Transnet Contract Manager, remove the out of service plant or equipment and replace it with similar fully operational plant or equipment at no additional cost.

No item of plant or equipment delivered to site for use on the contract may be removed from the site prior to the completion of the contract without approval in writing from the Transnet Contract Manager.

Items of plant or equipment brought onto site by the contractor or his sub-contractors may be inspected by a Transnet Contract Manager. Should the Transnet Contract Manager determine that any item is inadequate, faulty, unsafe or in any other way unsuitable for the safe and satisfactory execution of the work for which it is intended, the contractor

©Transnet SOC Ltd

must, on instruction from the Transnet Contract Manager, immediately remove the item from the site and replace it with a safe and adequate substitute. In such a case, the contractor or his sub-contractor shall not be entitled to additional payments or deadline extensions in respect of any delay caused.

16.8 Barricading

All applicable legislation concerning barricading must be complied with at all times.

Each contractor required to erect barricading on the work site(s) must develop, document and implement Safe Work Procedures that are aligned with the requirements of this specification.

Barricading must be erected to:

- Prevent persons from making contact with an identified hazard;
- Provide warning of the existence of a hazard;
- Prevent unauthorised access (by people, vehicles and mobile equipment) into an area where a hazard exists or where a hazardous activity is being carried out;
- Define the boundaries of a hazardous location and / or restricted area; and
- Allow a work team to perform hazardous tasks without persons unfamiliar with the hazard(s) accessing the area.

Although not limited to these situations, barricading must be erected or installed:

- Around excavations (trenches, pits, etc.) (refer to the Excavation Standard);
- To protect openings and edges (to prevent persons from falling, all openings and edges associated with floors, stairs, and the open sides of buildings and structures during the course of construction must be protected by sturdy, rigid barriers capable of withstanding a force of at least 110 kilograms applied in any direction at any point) (refer to the Working at Heights Standard);
- To prevent access into areas where overhead work is in progress;
- To route vehicles safety through (or around) construction areas; and
- To protect members of the public who may be in the vicinity of a work or construction site (by preventing access).

A barricade must present a sturdy physical barrier to entering an area. Therefore, plastic cones, post and chain systems, "danger tape" and "snow netting" will not be accepted as barricading and may only be used for the purposes of low risk demarcation.

Regardless of the type of barricade used, the following requirements must be met:

- The installation, alteration and removal of barricades must be supervised by a competent person;
- The barricading must be uniformly and intelligently configured;
- The barricading must be stable, conspicuous and effective;
- The barricading must completely surround the work or hazardous area;
- General access requirements around the work or hazardous area (such as pedestrian walkways, operational access, or general thoroughfares) must be taken into consideration when erecting a barricade;
- The extent of the area that is barricaded must be kept to a minimum so as not to unnecessarily restrict access to other areas. If access routes to other areas are blocked by the barricade, alternative routes must be identified and signposted

©Transnet SOC Ltd

- All barricaded areas must have properly designated points of entry and exit for persons and / or vehicles. Each pedestrian access point must be fitted with a self-closing gate. A sign indicating, "DESIGNATED ACCESS POINT – AUTHORISED PERSONNEL ONLY", must be fitted to each gate;
- Additional signage providing warning of specific hazards (e.g. falling objects, electricity, etc.) Including, "NO UNAUTHORISED ENTRY", must be attached to all gates and, where required, to the barricading itself. The signage must be visible from all angles and must be large enough to be read from a distance of 10 metres;
- Barricading must be clearly visible at all times (day and night). If necessary, flashing warning lights must be used;
- Tags must be attached to the barricading displaying the name and cell phone number of the person responsible for the barricade, and specifying the reason for the barricading and the date on which it is scheduled to be removed;
- Should a person require access to a barricaded area, authorisation must be obtained from the person responsible for the erection of the barricade. The hazards that are present and the Personal Protective Equipment that must be worn within the barricaded area must be communicated to the person seeking access;
- Each barricade must be listed in a register, and each must be inspected daily to ensure that it is still intact and that its positioning is still effective;
- All barricades must be properly maintained and repaired as required;
- When the work has been completed and the hazard has been eliminated, all barricading must be removed without delay. A barricade may not be left in place if no hazard exists;
- Before a barricade is removed (allowing general access), the area must be inspected by the person responsible for the work that was carried out, to ensure that the area is once again safe. If applicable, the person accepting the area back for general use shall do so on completion of his own safety inspection;
- Authorisation to remove (or modify) a barricade may only be granted by the person responsible for the erection of the barricade.

16.9 Working from fall risk position (working at heights)

All applicable legislation concerning work performed from a fall risk position must be complied with at all times. Fall prevention or fall protection measures must be in place whenever the potential exists for a person to fall from a fall risk position.

16.9.1 Fall protection

Whenever there is a risk of falling from a fall risk position, whenever there is a risk of falling onto dangerous equipment or machinery even if the potential fall distance is less than 2 metres, or whenever work must be carried out within 2 metres of an opening through which (or an edge over which) a person could fall, no work may commence unless:

- a fall protection (and rescue) plan is in place (prepared by a competent person, and implemented by the contractor);
- A detailed task-specific risk assessment has been carried out;
- A safe work procedure is in place for the task to be performed;
- A permit to work has been obtained; and
- Each person has been provided with suitable fall protection equipment.

©Transnet SOC Ltd

Fall protection equipment (either fall restraint or fall arrest equipment) must be used at all times whilst the work is being carried out.
To prevent persons from falling, fall restraint equipment must be used whenever work must be carried out within 2 metres of an opening through which (or an edge over which) a person could fall. Fall arrest equipment must be used whenever the potential exists for a person to fall 2 metres or more.

A person has been provided with suitable fall protection equipment if he is secured by means of an approved full body harness (well fitted) with two shock absorbing lanyards or an inertia reel (when fall arrest equipment is required) or two short restraining lanyards (when fall restraint equipment is required), double or triple action snap hooks (or karabiner type rings), and secure anchorage points (a person's lanyard may be attached either directly to an anchorage point or indirectly through the use of a variety of systems that incorporate a lifeline).

A dual lanyard system must be used to ensure that at least one connection point is maintained at all times.
Note: When selecting fall arrest equipment, care must be taken to ensure that the potential fall distance is greater than the height of the person plus the length of the lanyard with its shock absorber deployed (taking the height of attachment into account).

Anchorage points must, where practical, be above the head of the person, and must ensure that in the event of a fall the person will neither swing nor touch the ground.
All permanent anchorage points must be designed and approved by a professional structural engineer.

All anchorage points must be periodically inspected and tested by a competent person to ensure that they are secure and can support the required load. A system must be in place to identify anchorage points as authorised for use. Temporary anchorage points (and lifeline systems) may only be used if a competent person has certified them safe to use.

If an elevating work platform is used, such equipment must be fitted with a fixed anchorage point for the attachment of fall protection equipment.

The use of fall protection (fall restraint or fall arrest) systems must be avoided wherever and whenever possible through design, the installation of physical barriers that protect persons from falling, and employing alternative methods of working.
Only if physical barriers protecting against free falls cannot be installed must fall protection equipment be used.

Fall protection (fall restraint or fall arrest) systems are items of personal protective equipment and, if required, must be purchased, installed and provided to employees.
Prior to commencing with any work at height, an assessment must be conducted to determine if the work requires the use of fall protection equipment, and if so, which fall protection system is the most appropriate for the work.

There must be a system for ensuring that fall protection equipment is:
- Tested and certified for use;

©Transnet SOC Ltd

- Inspected by the user before use; and
- Destroyed following a fall or where inspection has shown evidence of excessive wear or mechanical malfunction.

All persons that are required to work at height (in order to carry out routine or non-routine tasks) must first be trained and certified competent to do so. Furthermore, each person must be in possession of a valid medical certificate of fitness specifically indicating that the person is fit to work at height.

All persons required to use personal fall protection equipment must be trained and certified competent in the correct selection, use, maintenance and inspection of such equipment.

All fall protection equipment must be thoroughly inspected on a monthly basis by competent persons appointed in writing and each item of equipment must be tagged to show when it was last inspected. All inspections must be recorded in a register.
On finding defective or damaged equipment, appropriate action must be taken by the competent person (i.e. the destruction of the equipment to prevent further use).

Persons making use of personal fall protection equipment must do so in strict accordance with the instructions or requirements specified by the manufacturer or supplier of the equipment or system.
Specific pre-use inspection, maintenance and fitting protocols must be established in accordance with the manufacturer's requirements or guidelines and these protocols must be followed by all users of the fall protection equipment.

Solvents may not be used to clean fall protection equipment. Only manufacturer-approved cleaning solutions may be used.

No person required to use personal fall protection equipment may work in isolation (a minimum of two persons working together is required).
Competent supervision must be in place at all times for all work carried out at height. Supervisors must be appointed in writing.

Emergency response (rescue) procedures for the rapid retrieval of suspended persons in the event of a fall from height must be prepared and tested.

Note: Even though there is no risk of free fall, fall protection equipment may be required in situations where there is a risk of falling, slipping or sliding down a slope of more than 45 degrees.

Note: The maximum service life of fall protection equipment manufactured of synthetic fibre shall be 5 years from the date of first use and / or manufacture unless otherwise specified by the manufacturer.

A person may climb or descend a ladder without fall protection provided that he is able to use both hands and legs to do so, faces the ladder, and uses one step at a time. The ladder must be tied off or supported at its base.

©Transnet SOC Ltd

Prior to any roof work being performed, or prior to persons accessing a roof, a structural engineer must verify that the roof is of sound construction and that it is capable of supporting the weight of the persons as well as any equipment that may be required. Should the engineer's findings be to the contrary, alternative methods of performing the work must be found. Particular care must be taken when work is carried out on an asbestos cement roof or a fibreglass roof.

16.9.2 Falling Objects

In the process of planning work activities, the risks associated with falling objects (i.e. materials, tools or equipment) must be assessed and appropriate control measures must be identified, implemented, and monitored taking the following hierarchy of controls into consideration:

- Preventing objects from falling – by using containment sheeting, toe boards, lanyards to secure tools (to a person or to the structure), ropes or chains to secure equipment (to the structure), lift boxes, brick cages, etc. and by properly securing loads when lifted by crane or hoist;
- Protecting people from falling objects – by establishing barricaded exclusion zones, installing catch platforms or catch nets, displaying warning signage, and posting safety watchers and / or traffic controllers; and
- Personal Protective Equipment (particularly safety helmets and safety boots) – protective equipment is a last line of defence and must be worn.

Where overhead work is being carried out, barricading must be erected around the work area (at the level at which the work is taking place and at every level below including ground level) to prevent persons from entering such an area and potentially being struck by falling objects.
Wherever hazards related to falling objects exist, appropriate warning signage (i.e. "Overhead Work In Progress" and "No Unauthorised Access") must be prominently displayed.

No items are permitted to lie loose in elevated positions (e.g. nuts and bolts must be securely stored) and good housekeeping standards must be maintained at all times.
No tools, equipment, material, debris, waste, etc. may be dropped from height. Objects must be lowered or chuted to ground level in a safe and controlled manner.

16.9.3 Ladders

All ladders used on site must be of sound construction and adequate strength.
Only non-conductive ladders made of wood or fibreglass may be used for electrical work or work being performed in proximity to energised electrical equipment. Metal ladders and ladders with metal reinforcing may not be used.

The use of makeshift ladders is forbidden.
All ladders must be numbered, listed in a register, and inspected by a competent person on a monthly basis (the results of each inspection must be recorded in the register).

Before using a ladder, the user must inspect it for damage. Ladders with missing, broken, cracked or loose rungs, split stiles, missing or broken spreaders (stepladders) or any other form of damage or defect may not be used. A damaged ladder must be removed from service (and tagged, "Out of Service") without delay and must then either be repaired (if possible) or destroyed to prevent further use.

©Transnet SOC Ltd

Persons must receive instruction in the correct use and proper care of ladders.

Ladders may only be used as a means of access and egress. The use of ladders as working platforms is prohibited, except for inspection and carrying out minor tasks (i.e. light work and short duration) such as changing a light bulb.

Ladders may not be positioned horizontally and used as walkways or runways or as scaffolding.

All portable ladders must be fitted with non-skid safety feet (or some other means to prevent the base of the ladder from slipping) and the feet must always be placed (stand) on a firm level surface. The use of bricks, stones, wood or any other material to level the stiles of a ladder is prohibited. Ladders may not be placed on movable bases such as boxes, tables, trucks, etc. The base or foot of a ladder must always be secured to prevent it from slipping. The ladder must be held by an assistant if the base cannot be secured in any other way (e.g. tied off).

A straight ladder must extend at least one metre above its support (or above the working platform that it is providing access to). The top of the ladder must be tied off (or otherwise secured to its support) to prevent accidental movement. A straight ladder must be placed at a safe angle, i.e. tilted at a ratio of approximately 4:1, meaning that the base of the ladder must be one metre away from the wall (or other vertical surface) for every four metres of height to the point of support.

A stepladder may never be used as a straight ladder. A stepladder must be opened fully and the spreaders must be locked securely.

When using an extension ladder, at least four rungs must always overlap at the centre of the ladder.

Ladders may not be joined together unless they have been specifically designed and manufactured for that purpose.

A suspended ladder (i.e. not standing on a base) must be attached in a secure manner to prevent undue swinging or swaying, and to ensure that it cannot be displaced.

A ladder may not be placed against a window, glass or any other material which is unlikely to withstand the force exerted on it by the top of the ladder.

A ladder may not be placed in front of a door or window that opens towards the ladder unless the door or window has been locked or barricaded. When a ladder is used near an entrance or exit, the base of the ladder must be barricaded.

Materials and / or equipment may not be placed in close proximity to the base or landing of any ladder.

©Transnet SOC Ltd

When ascending or descending a ladder, a person must always face the ladder and use both hands (i.e. maintain three points of contact). Nothing may be carried up or down a ladder if it prevents the person from holding on to the ladder with both hands. Tools must always be properly secured. This can be achieved by attaching them to the wrist using lanyards or placing them in a tool belt around the waist. Tools and materials may also be carried in a bag over the shoulder or hoisted to the landing using a tool bag and rope.

Only one person at a time may use (i.e. be positioned on) a ladder.

No person may stand or step above the third rung from the top of a straight ladder or above the second highest step of a stepladder.

Overreaching from a ladder is prohibited. If the target is not within comfortable reach, the person must climb down and reposition the ladder. No person may run up or down a ladder, or jump from the lower rungs or steps to the ground.

All ladders must be properly maintained and cared for. Ladders must be stored under cover and should be hung in a horizontal position from several brackets. No ladder may be left lying on the ground or be left exposed to the weather. A ladder left lying on the ground presents a tripping hazard and it may be damaged by vehicles running over it. No ladder may be left in such a position where it may fall over, be accidentally knocked over, or be blown over by the wind.

Ladders may not be painted, as the paint may conceal damage, defects, labels or other markings. Instead of paint, clear varnish or wood oil may be used to preserve wooden ladders. Ladders must be kept clean, as dirt may conceal damage or defects. Oil or grease accumulation on the rungs of a ladder may cause a person to slip.

Before making use of a ladder, each person must make an effort to remove mud, oil, grease, etc. from his boots.

16.10 Permit to Work

All personnel must comply with the Permit to Work system applicable to the scope of work. A Permit to Work must be obtained before carrying out any work that involves:

- A hazardous energy source or system, including electricity, compressed fluids (e.g. hydraulics and pneumatics), chemical substances (e.g. toxic, corrosive, flammable or explosive gases and liquids), heat (e.g. steam), radiation, and machinery or materials with potential energy (gravitational and elastic) – isolation and lockout may be required;
- Confined space entry;
- Working at height;
- A critical lift;
- Hot work outside of designated workshops;
- Excavation; or
- A service (e.g. water supply, fire suppression systems, etc.).

Note: A Permit to Work may only be issued by an Authorised Person, and may only be received (or accepted) by an appointed Applicant (see Definitions).

©Transnet SOC Ltd

Each Permit to Work that is issued must make reference to an approved Task-Based Risk Assessment for the work that is to be carried out.

The Permit to Work system that is employed must incorporate the following basic procedures:

- Prior to meeting with the Authorised Person, the Applicant must familiarise himself with all of the hazards associated with the system, plant, equipment, structure or area on or in which the work must be performed. He must also consider the risks that may arise as a result of the tasks that will be carried out. A Task-Based Risk Assessment must be in place;
- The Applicant must then request permission to carry out the work and must meet with the Authorised Person to discuss and document the scope of the work as well as the hazards, risks and associated control measures. Isolation and lockout requirements must be identified (if applicable). The isolation and lockout process must be initiated by the Authorised Person who must contact the necessary Isolation Officers.

Note: The Applicant must ensure his own safety and that of his team, and has the right to accompany the Isolation Officers to verify that all of the necessary locks have been fitted to all of the isolation and lockout points in accordance with the applicable plant or equipment-specific Isolation and Lockout Procedure.

- Once all of the necessary isolations have been completed and the necessary Clearance Certificates have been issued by the Isolation Officer(s) (if applicable), and the Authorised Person is satisfied that the system, plant, equipment, structure or area is safe to work on or in provided all identified precautions are observed by the Applicant, then he must issue (sign) the Permit to Work to the Applicant;
- The Applicant must accept (sign) the Permit to Work. If equipment has been isolated, the Applicant must attach his Personal Lock to the relevant Isolation Bar (or Local Isolation Point) and must ensure that every other person working on the isolated equipment also attaches his or her Personal Lock to the Isolation Bar (or Local Isolation Point) before starting any work;
- Before commencing with any work, the Applicant must discuss the hazards, risks, control measures, precautions and limitations as stated in the Permit to Work (and associated Task-Based Risk Assessment) with all personnel who will be carrying out the work. A register must be kept and all persons must sign the register once they have been briefed by the Applicant;
- The work performed must be limited to what is described in the Permit to Work;
- When a particular employee has completed his work, he must sign the personnel register to this effect and (if applicable) must remove his Personal Lock from the Isolation Bar (or Local Isolation Point);
- Once all work is complete, the Applicant must:
    - Ensure that all machine guards have been replaced;
    - Ensure that all tools and materials have been removed from the work area;
    - Ensure that the work area is clean and tidy;
    - Ensure that all Personal Locks (including his) have been removed from the Isolation Bar or Local Isolation Point (if applicable);
    - Inform the Authorised Person that the work has been completed; and

©Transnet SOC Ltd

  - Sign off the Permit to Work.
- Once the work is complete and the Applicant has signed off the Permit to Work, the Authorised Person must:
  - Ensure that the relevant Isolation Officers perform all of the necessary de-isolations (if applicable);
  - On completion of the de-isolations, sign off the Permit to Work accepting the system, plant, equipment, structure or area back for service; and
  - Inform all relevant personnel that the system, plant, equipment, structure or area is ready to use.
  - Where the work must continue over more than one shift, the Permit to Work must be reviewed at every shift change by an Authorised Person. If the scope of work has changed, the permit must be cancelled and a new permit must be issued.

If any of the original conditions or precautions pertaining to the work is not being complied with, is no longer adequate or is no longer applicable, the Authorised Person must cancel the Permit to Work and must ensure that all work stops until full compliance with either the original or amended (as required) conditions and precautions is achieved and a new permit has been issued.

The Applicant must ensure that the Permit to Work (including the personnel register) is kept where the work is being carried out (i.e. posted on a portable Health and Safety Notice Board) and that the work is monitored against the permit conditions.

All Permit to Work records must be retained and must be made available for inspection when required.

The implementation of the Permit to Work system applicable to the project must be audited on a regular basis by a Transnet Contract Manager. Furthermore, planned task observations must be carried out periodically.

Note: In addition to obtaining Permits to Work as and when required for specific hazardous activities (identified in this specification), each contractor must obtain a General Work Authorisation from a Transnet Contract Manager on a monthly basis. A General Work Authorisation is valid for one calendar month and authorises the contractor's planned work activities. In order to obtain a General Work Authorisation, the contractor must provide a documented work plan for the month together with the necessary Task-Based Risk Assessments.

16.11 Isolation and Lockout

Isolation and lockout procedures that make it impossible to inadvertently energise any system, plant or equipment so isolated, must be in place for all work where hazardous energy sources exist, including electricity, compressed fluids (e.g. hydraulics and pneumatics), chemical substances (e.g. toxic, corrosive, flammable or explosive gases and liquids), heat (e.g. steam), radiation, and machinery or materials with potential energy (gravitational and elastic). These procedures must be strictly enforced and complied to by all personnel.

All Isolation and Lockout Procedures must incorporate the following basic requirements:

©Transnet SOC Ltd

- The issuing of a formal Permit to Work for any work that requires the isolation of any system, plant or equipment;
- The use of defined Equipment, Discipline and Personal Locks (see Definitions), and multiple lockout systems (i.e. Isolation Bars and lockout hasps);
- Clear identification of all isolation and lockout points ensuring there is no duplication;
- Isolation of the main energy source;
- The use of slip plates or the blanking off of pipelines or ducting, in addition to the chaining and locking of valves, as determined by a risk assessment;
- Suitable methods of preventing the movement of equipment; and
- Methods to test the effectiveness or completeness of the isolation.

Note: No work may commence on a system, plant or equipment until a Permit to Work has been issued by an Authorised Person.

Note: A Permit to Work may only be issued by an Authorised Person once all required Clearance Certificates have been issued by appointed Isolation Officers.

The isolation and lockout system that is employed must incorporate the following basic procedures:

- In accordance with a system, plant or equipment-specific Isolation and Lockout Procedure, an appointed Isolation Officer(s) must isolate all points that need to be isolated in order to render the system, plant or equipment safe to work on. An Equipment Lock (and a suitable, highly visible warning tag) must be attached to each isolation point;
- On completion of an isolation (and lockout), the Isolation Officer must clear the area of all persons and must then carry out tests to ensure that the isolation is effective. This may be done by pressing a start button or by asking a control room operator to try to start the equipment. Special care must be taken to ensure that the attempted starting of the equipment has not been deactivated by another interlock forming part of the system, or by a different up-stream isolation. Alternatively, appropriate equipment may be used to test for energy (e.g. voltage verification or continuity tests).

Note: In the case of electrical isolation, a test for voltage must be carried out, after the switching device, to ensure the absence of voltage.

- The Isolation Officer must place the key to the Equipment Locks on an Isolation Bar (at a Lockout Station) and must then attach a Discipline Lock (to prevent the key from being removed) before issuing a Clearance Certificate;
- The Discipline Lock must remain in place when handing over to subsequent shifts. All Discipline Locks for a particular discipline (e.g. low voltage electricity) must be keyed-alike so that any Isolation Officer appointed for that discipline (and issued with a key) can open any of the Discipline Locks used for that discipline.
  This enables an Isolation Officer to de-isolate equipment that may have been isolated by another Isolation Officer during an earlier shift. Appointed Isolation Officers for a particular discipline are the only persons permitted to hold keys to the Discipline Locks used for that discipline.

©Transnet SOC Ltd

Note: Local isolations do not require the use of Equipment Locks (a Discipline Lock may be attached to the Local Isolation Point by the Isolation Officer, followed by the necessary Personal Locks).

Note: For local isolations, if the Isolation Officer is the only person who will be working on the isolated equipment, then he must attach his Personal Lock to the Local Isolation Point.

- Once all required Discipline Locks are in place (i.e. attached to the Isolation Bar) and all Clearance Certificates have been issued, the Permit to Work may be issued by the Authorised Person;
- Each person who will be working on the isolated system, plant or equipment must then attach his or her Personal Lock to the Isolation Bar before starting any work (including the Isolation Officer, if he intends to work on the isolated unit);
- The attachment of a Personal Lock to the Isolation Bar prevents the removal of the key to the Equipment Locks even if the Discipline Lock is removed;
- When called (by an Authorised Person) to de-isolate the system, plant or equipment (on completion of the work under the Permit to Work), the Isolation Officer must ensure that all Personal Locks have been removed from the Isolation Bar before removing the Discipline Lock and the key to the Equipment Locks;
- Before removing the Equipment Locks and de-isolating the energy source, the Isolation Officer must inspect the system, plant or equipment that was worked on to ensure that it is safe to perform the de-isolation. This includes guard inspections, housekeeping, ensuring that all doors and covers are in place, and most importantly, ensuring that no persons are present;
- Once all Equipment Locks have been removed and the system, plant or equipment is safe for use, the Isolation Officer must cancel the Clearance Certificate and inform the Authorised Person that the unit has been de-isolated.

Where a system, plant or equipment is sequence interlocked and a hazard could be created through the inadvertent start up or shut down of a system, plant or equipment lying before or after the unit to be worked on, then that system, plant or equipment must also be isolated and locked out.
Redundant or out of service equipment must, in addition to being isolated and locked out using the relevant Discipline Lock, be fitted with a tag indicating why it is out of service, who performed the lockout, and the hazards associated with that equipment.

Where it is necessary to work on live equipment for the purposes of commissioning, testing, adjusting and sampling, such work must be carried out in accordance with a written Safe Work Procedure and controls must be in place to prevent unauthorised access into the work area.
The implementation of the isolation and lockout system and procedures applicable to the project must be audited on a regular basis by a Transnet Contract Manager. Furthermore, planned task observations must be carried out periodically.

16.11.1 Personal Locks

A Personal Lock must be such that it can only be unlocked by the person to whom it belongs. Combination locks may not be used. A Personal Lock, as well as the key(s) to the lock, must be kept under the exclusive control of the person to whom the lock belongs.

©Transnet SOC Ltd

A Personal Lock must be issued to each person who requires one, and the person's details must be clearly and permanently engraved directly onto his Personal Lock. Alternatively, a thick durable plastic identification tag may be used that clearly displays the company's name, the employee's name, the employee's company number, and a contact telephone number (the tag must be securely fastened to the Personal Lock). Where the above is hand written, it must be done using a permanent marker pen and it must be legible.

Each person issued with a Personal Lock must be trained and certified competent in the correct use of such a lock.

A Personal Lock may NEVER be removed by anyone other than the person to whom it belongs, except if the removal (cutting) of the lock is authorised by the Transnet Contract Manager (in the absence of this person, authorisation can only escalate upwards). Furthermore, the removal of the lock must be done under the personal supervision of the Transnet Contract Manager, and in accordance with a written procedure. The removal (cutting) of a Personal Lock may be required if the person who applied the lock is unable or unavailable to remove it on completion of the work (e.g. lost his key, failed to remove his lock before going home, etc.).

16.12 Electrical Safety

The contractor must ensure compliance with Electrical Installation Regulations, Electrical Machinery Regulations, OH&S Act, TFR Electrical Safety Instructions, TFR E7/1 Specification for Works On, Over, Under or Adjacent to Railway Lines and Near High Voltage Equipment and all applicable SANS Codes and Practices.

All electrical work must be carried out by competent personnel in accordance with all legal requirements, codes, design criteria and safety standards applicable to the scope of work.

Each contractor carrying out electrical work on the site(s) must develop, document and implement Safe Work Procedures that are aligned with the requirements of this standard.

All persons who will be carrying out electrical work must be certified against the requirements of job and equipment-specific electrical competency standards for the project, which must address job and equipment-specific Safe Work Procedures.

Each person potentially exposed to electrical hazards must receive electrical hazard training at the commencement of his employment on site and thereafter on an annual basis. The training must address the equipment and conditions specific to the area where the individual will be working. The training material must be documented and training records must be kept.

16.12.1 Electrical Installations

Each electrical installation (temporary or permanent) installed or worked on by a contractor must be inspected by a Transnet Contract Manager to ensure that the installation complies with all statutory requirements, codes, design criteria and safety standards applicable to the project.

©Transnet SOC Ltd

A Transnet Contract Manager must approve all electrical work before the installation is energised. Any installation deemed unsatisfactory by a Transnet Contract Manager must be removed, repaired or modified by the contractor at his expense.

For every permanent or temporary electrical installation, a certificate of compliance must be issued by a competent and appropriately qualified electrician. These certificates must be available for inspection.

Single line diagrams (with supporting documentation) must be produced and maintained for all electrical installations. This information must include system fault calculations, equipment details, electrical protection discrimination curves, and cable ratings.

Work on electrical installations (new installations, and modifications or repairs to existing installations) may only be carried out by qualified and authorised personnel (i.e. electricians).

Electrical safety devices (specifically, earth leakage protection and overcurrent protection) must be installed on all distribution circuits and the settings must be established by suitably qualified personnel.

A suitable numbering and / or labelling system must be used so that each circuit breaker or earth leakage device can be clearly and readily matched with the outlet or equipment that it protects.

To ensure the safety of the user, each distribution panel must be completely enclosed, must be of the dead-front type, and must be properly constructed and earthed.

All electrical cabling must be covered (e.g. in cable trenches) or elevated (in cable trays) to protect it from damage and to eliminate tripping hazards.

All permanent and temporary electrical installations (cabling, sockets, distribution panels, transformers, switchgear, etc.) must be inspected and tested by a competent and suitably qualified electrician on a monthly basis. The testing must include a grounding (earthing) continuity test and testing of the electrical safety devices. Details of these inspections and tests must be recorded in a register which must be made available to the Transnet Contract Manager for inspection.

A rigorous Isolation, Lockout and Permit to Work system must be applied to all electrical work (i.e. work on electrical installations, machinery or equipment). All personnel must comply with the system and procedures applicable to the project.

Before any work on an electrical installation or equipment is carried out, the installation or equipment must be de-energised.

No electrical work may be performed live, regardless of the voltage, unless written approval is obtained from the Transnet Contract Manager (a justification as to why it is necessary for the work to be carried out with the equipment in an energised state must be provided).

©Transnet SOC Ltd

For all energised electrical work, a Safe Work Procedure must be in place and, with the exception of voltage testing and where no tools are used, a Permit to Work (specifically authorising energised electrical work) must be issued. When carrying out any energised electrical work, approved electrically insulated gloves, blankets, mats and other protective equipment must be used.

Control centres, switchgear rooms, substations, generators, transformers, capacitor banks, and other similar electrical plant and equipment must be appropriately guarded and labelled and, with the exception of emergency shut-off mechanisms, must be made inaccessible to unauthorised personnel (i.e. plant or equipment of this nature must be positioned within rooms or fenced enclosures which must be kept locked).

Appropriate warning signage must be prominently displayed within, and at all entrances to, these rooms or enclosures. The signage must indicate that unauthorised persons are prohibited from entering, that unauthorised persons are prohibited from handling or interfering with any electrical plant or equipment, the procedure to be followed in the event of a fire, and the first aid procedure to be followed should a person suffer electric shock. Suitable fire-fighting equipment must be provided in all such rooms or enclosures.

All electrical panels must be kept locked (using keyed-alike padlocks). Keys may only be issued to authorised personnel.

All un-insulated (bare) or partially insulated conductors must be enclosed and protected to prevent accidental contact therewith. Measures must be taken to prevent unauthorised access and appropriate warning signage must be conspicuously displayed.

Only authorised persons may enter rooms or enclosures housing electrical plant or equipment, and only authorised persons may access electrical panels or cabinets, and cable ducts or trenches. If any work must be carried out in such an area or on such equipment, a Permit to Work must first be obtained from the Transnet Contract Manager.

No connection to any electrical system may be made without prior approval and a valid Permit to Work from the Transnet Contract Manager.

No electrical equipment or apparatus may be modified without written authorisation from the Transnet Contract Manager.

Conductive ladders may not be used in proximity to non-insulated electrically energised lines or equipment.
All permanent and temporary electrical cables, whether energised or not, must at all times be handled as if they are energised.

Only appropriately certified intrinsically safe electrical equipment may be used in flammable or potentially explosive atmospheres such as in confined spaces. Any equipment or structure on which electric charges may accumulate (such as storage tanks) must be grounded (earthed).

©Transnet SOC Ltd

Lightning protection must be provided on all tall structures and buildings. Grounding (earthing) and lightning protection systems and devices must be designed, engineered, selected and installed based on site-specific requirements.

Before carrying out any excavation work, a Permit to Work (specifically authorising the excavation activities) must be obtained from the Transnet Contract Manager. Such a permit must not be issued until it has been verified that no buried hazards or services exist where the excavation work is to be carried out (refer to the Excavation Standard).

16.12.2 Arc Flash Safety

Depending on the scope and nature of the work, a documented arc flash protection programme must be in place that specifies:

- The methodology for calculating incident energies and determining flash protection boundaries; and
- The PPE required (specific to a task and the equipment on which the task is performed) and associated procedures to mitigate the hazard.

The method of calculation must be based on regional electrical code requirements, or if none exist, the Institute of Electrical and Electronics Engineers (IEEE) Standard 1584, or the United States National Fire Protection Association "Standard for Electrical Safety in the Workplace" (NFPA 70E), or published equivalent.

An Arc Flash Hazard Assessment must be carried out based on accurate and current data. All electrical cabinets where the potential for an arc flash hazard exists must be labelled in accordance with the hazard assessment and the potential incident energies calculated.

A process must be in place for updating the Arc Flash Hazard Assessment and labelling as changes and electrical upgrades occur that might affect the available short circuit current on the system.
In order to mitigate the hazard, Safe Work Procedures must be in place and all persons potentially exposed to arc flash hazards must be trained in these Safe Work Procedures and must be supplied with appropriate arc flash PPE.

16.12.3 High Voltage Power Lines

Before any mobile equipment (such as a crane, bulldozer, back-actor, boom truck or drill rig) is mobilised to a work site, an assessment must be carried out (including a thorough inspection of the work site and the access route) in order to clearly identify any overhead or underground power lines.

A system must be in place to mitigate the risks associated with working in close proximity to power lines and suitable measures must be taken to prevent personnel or equipment from coming into contact with power lines. Extreme caution must be exercised.

Where possible, exclusion zones (based on minimum clearance distances specified by the electrical power utility or the Transnet Contract Manager) must be created with rigid barriers and warning signs.

Only in exceptional circumstances, and then only after a detailed method statement and risk assessment has been approved, all necessary mitigation or control measures are in place (including the use of a spotter), and a Permit to Work has been issued by the

©Transnet SOC Ltd

Transnet Contract Manager, may equipment be operated within one boom length of energised overhead power lines. Suitable protective insulating barriers may need to be used.

If possible, the power lines must be de-energised and isolated while the work is carried out.

All equipment operators and rigging personnel must be trained in the hazards and the applicable safe approach distances (exclusions zones) associated with overhead power lines.

A procedure must be in place for the evacuation of mobile equipment or a vehicle in the event of accidental contact with power lines. All operators must be trained in this procedure and must follow it implicitly.

Scaffolding may not be erected within 5 metres of power lines or overhead track equipment.

16.12.4 Portable Electrical Equipment

Prior to site establishment, each contractor must provide a complete inventory of all portable electrical equipment that he and his sub-contractors intend to use on the site (including plant, machines, appliances, generators, hand tools, lighting, extension cords, etc.). The nameplate data for each item of equipment must be included.

All portable electrical equipment to be used on the site must be supplied and maintained in a serviceable condition.

Any electrical equipment that is in poor condition or is not in proper operating order may not be used. Any electrical equipment that a Transnet Contract Manager deems to be unsafe or unsuitable must be removed from site.

Electrical repair work or diagnostic work on electrical equipment may only be performed by personnel who are competent and authorised to perform this work (i.e. qualified electricians).

With the exception of double-insulated equipment, all electrical equipment must have an equipment grounding (earthing) conductor that connects the frame of the equipment being utilised to the grounding (earthing) conductor of the electricity supply system.

All electrical equipment and all electricity supply systems used (including generators) must be inspected and tested by a registered and competent electrician to ensure that all equipment is properly grounded (earthed).

All electrical equipment used on site must be supplied electricity through (i.e. must be protected by) an approved and tested residual current device (or earth leakage device or unit). If a socket outlet does not have a residual current device in the circuit, a portable residual current device must be used. Outlets without residual current device protection must be labelled as such.

©Transnet SOC Ltd

Any electrical equipment that causes an earth leakage device to trip or deactivate the circuit may not be used again until an electrician has inspected and tested the equipment and has recorded in a register that the equipment is safe to use.

Interlocks may never be removed or modified, and fuse terminals may never be bypassed to keep current flowing in any circuit.

All generators must be fitted with suitable overcurrent protective devices (i.e. circuit breakers or fuses).

All generators must be used in compliance with the manufacturer's requirements. Any proposed modification to a generator must be authorised in writing by the manufacturer prior to the modification being made.

Each welding machine used on site must be fitted with a Voltage Reduction Device (VRD). If this is not practical (i.e. for arc welding processes other than stick welding), a dead man's (isolation) switch in the electrode circuit (operated by a trained observer) may be used as an alternative. All welding machines must be properly grounded (earthed).

All portable electrical hand tools used on the site must be double-insulated.

Electrical equipment must be disconnected or unplugged when not in use.

Portable lights must be stable and each light bulb must be protected by a substantial guard.

Temporary festoon lighting must be double-insulated and must be supported at least 2.5 metres above the floor, if possible.

Handheld lights must be of the all-insulated type and must be extra low voltage (i.e. not exceeding 32V). 120V or 240V handheld lights are not permitted.
Any lighting used in hazardous locations (i.e. potentially explosive atmospheres, confined spaces, and damp or wet areas) must be operated at a maximum of 32 volts, unless earthed and protected by earth leakage devices.

No person may wear a watch or any jewellery, or carry any metal objects such as a lighter or keys, while working on any electrical system or equipment.

No person may work on or use electrical equipment if his clothing is wet or any part of his body is in contact with water.

No person may handle electrical equipment, equipment cords or extension cords with wet hands or if the floor or ground surface is wet.

Fire extinguishers filled with carbon dioxide must be used to fight electrical equipment fires (water may never be used). If possible, the electrical equipment should be de-energised before fire-fighting activities commence (refer to the Fire Protection and Prevention Standard).

©Transnet SOC Ltd

When cleaning or performing maintenance work on an item of electrical equipment, the equipment must be unplugged.

Equipment may not be unplugged while that equipment is switched on. Nor may equipment be plugged into a receptacle (socket) with the equipment's switch turned on.

Electrical equipment that has a defective plug or wiring may not be used. Repair work to defective or damaged electrical equipment may only be carried out by a qualified electrician.

Extension cords may be used for temporary applications only. Permanent cabling must be installed for long-term needs. Extension cords may not be run through doors, windows, ceilings or holes in walls. An extension cord must be uncoiled completely before it is used. An extension cord must be of sufficient current-carrying capacity to power the equipment that it is supplying electricity to. Cords must not be overloaded.

Extension cords must be unbroken and continuous (i.e. no joins or splices in the cord are permitted). Extension cords may not be daisy-chained (i.e. one extension cord plugged into another extension cord). Extension cords and equipment cords may not be modified to fit a receptacle (socket).

Two-conductor extension cords may not be used. A three-conductor extension cord (i.e. a grounded or earthed cord) must be used even if the equipment that it is supplying electricity to uses a two-prong plug.

Extension cords that are frayed, have insulation tears, cracks or abrasions, have exposed conductors, or have bent, broken or "spread" plug prongs may not be used.
Extension cords that will be used outdoors must have heavy duty insulation and must be weather and UV resistant.

All electrical equipment cords and extension cords must be covered or elevated to protect them from damage and to eliminate tripping hazards.
Each contractor is responsible for protecting his electrical equipment from the weather and from possible mechanical damage.

All portable electrical equipment (including generators) must be inspected, tested and tagged by a competent and appropriately qualified electrician on a monthly basis. Details of these inspections and tests must be recorded in a register which must be made available to the Transnet Contract Manager for inspection.

The inspection and testing must include a continuity test of the grounding (earthing) conductor (as applicable) and a complete examination of the equipment or system to assure safe use.

A colour coding system must be used for the tagging of all electrical equipment.

©Transnet SOC Ltd

The tag placed on a piece of equipment must be traceable to an entry in a register where the following information concerning the inspection and testing of that piece of equipment must be recorded:

- Date of inspection and testing;
- Equipment description;
- Equipment owner;
- Equipment location;
- Name, signature and licence number of the electrician who carried out the inspection and testing; and
- Comments concerning the inspection and testing, and details of any repair work carried out or required.

Any item of electrical equipment that does not pass an inspection or test must be removed from service (and tagged, "Out of Service") immediately and must then either be repaired (if possible) or removed from site.
Any item of electrical equipment without a tag or with an out-of-date inspection or test may not be used.

Any item of electrical equipment found without a tag or with an out-of-date inspection or test must be removed from service until it has been inspected and tested. If it is found that more than one item of equipment being used by a contractor has not been inspected and tested as required, all work with electrical equipment must be stopped until it can be demonstrated to the satisfaction of the Transnet Contract Manager that the contractor's systems and controls are adequate and fully implemented.

In addition to the formal monthly inspections and testing carried out by an electrician, electrical equipment (particularly extension cords, portable hand tools, welding machines, compressors and pumps) must be visually inspected by the user on a daily basis prior to use. Users must be trained to look for cracks in casings, loose casings, outer cord sheathing that is not being held firmly in position at the equipment, cuts or cracks in cord or cable insulation, exposed conductors, damaged plugs or sockets, and missing covers. Damage and / or defects must be reported immediately.

Personnel must immediately stop using and report any electrical equipment or machinery that is shocking, sparking, overheating or smoking. Corroded outlets, switches and junction boxes must also be reported.

16.13 Confined Spaces

The contractor shall comply to the requirements of General Safety Regulation 5 with regard to confined space entry and working inside confined spaces.

Entry into a confined space occurs when a person's whole body, upper body or head is within the confined space. This is not intended to prevent an authorised, competent person from inserting only his arm into the space to test for hazards using appropriate monitoring equipment. Precautions must be taken to prevent persons from being overcome by atmosphere escaping from the confined space.

©Transnet SOC Ltd

Before any person enters a confined space, a detailed risk assessment must be carried out, including the need for an authorised person to assess such things as oxygen levels, contaminants, temperature extremes and concentration of flammable substances.

As a minimum the risk assessment shall address the following:

- Isolation and lockout procedures required for chemical substances, mechanical or electrical energy, steam, pressure, heat, gases, liquids and solids;
- Venting, purging, draining and cleaning prior to entering the confined space;
- Hazards created by carrying out particular tasks or through the use of chemical substances in the confined space. Task-Based (or Issue-Based) Risk Assessments and/or Written Safe Work Procedures must be available for work in confined spaces - in particular for abrasive blasting, welding, flame cutting, grinding, chemical/steam cleaning, rubber lining and painting;
- Entry, exit and escape routes as well as barricading;
- The electrical safety, intrinsic safety and other safety specifications of equipment to be used in the confined space (explosive atmospheres must be considered);
- The need to test for presence of toxic/asphyxiant substances, radioactivity, oxygen, temperature extremes and flammable substances prior to entry and during the performance of work;
- Provision of suitable mechanical ventilation and personal protective equipment e.g. lifejackets etc. and in particular the use of respiratory protection such as compressed air breathing apparatus; and
- A ventilation rate suitable for general use must take into account factors such as air contaminant type, rate of generation, rate of oxygen depletion, temperature, efficiency of ventilation distribution and contaminant removal from the breathing zone. Therefore each situation needs to be evaluated on its own merit by a risk assessment that will select a combination of ventilation method and respiratory protection that suits the particular circumstances. This must be achieved by consultation between competent operations personnel, engineers and a ventilation specialist.

Entry and work inside a permitted confined space must be controlled and regulated by the project Isolation / Lockout and Permit to Work control systems. The Authorised Person issuing the Permit to Work may only do so if the conditions applying to the specific confined space entry have been satisfied and documented.

As a minimum, the following must be included in the permitting process:

- Access barriers to prevent unauthorised entry;
- Isolation procedures for contaminants and other energy sources;
- The need for breathing apparatus / ventilation requirements;
- The sign-in and sign-out of all persons entering the confined space;
- Display of the permit;
- Communication procedures and/or equipment;
- Safety specifications of equipment to be taken into the confined space;
- Barricading of entrances and exits;
- Rescue plan and equipment;
- Standby person(s); and

©Transnet SOC Ltd

- A completion and lock-in procedure (to ensure that space is evacuated and adequately secured).

The Permit to Work process must require competent rescue persons with suitable communication, rescue and firefighting equipment to be present where any of the following may exist:

- Compressed air breathing apparatus is required;
- There is a high risk of fires or explosions;
- The atmosphere can rapidly become unsafe for breathing purposes if the mechanical ventilation fails;
- There is a high risk of flooding or engulfment;
- Narrow tunnels or pipes are entered or where exit or escape routes cannot readily be accessed
- Work is done in remote areas; and
- A single person, who cannot be observed directly or is isolated from other workers, does the work.

Where testing for toxic/asphyxiate substances, radioactivity, oxygen, temperature extremes and other health hazards as well as for flammable substances is carried out, it may only be done by persons trained, tested and certified competent in writing to do so.

The ventilation method and quantity must be adequate to ensure oxygen levels and explosive or toxic gas levels remain within acceptable defined limits. Where ventilation is required, this must be covered by an approved documented procedure.

As a minimum standard, the volume of air pumped in and circulated in a confined space needs to be equivalent to 20 times the volume of the space per hour.

Where breathing apparatus or respiratory equipment is required, the contractor's Health and Safety Officer must be consulted with regard to the specification and selection of suitable equipment.
All persons required to use respiratory protection must be medically fit and trained in the correct use of the equipment.

Safe and convenient entry, exit and escape routes from the confined space must be provided where possible and practical. Where this cannot be achieved effectively, the risk assessment must determine if a competent rescue person must be on duty at the confined space when work is in progress.

Where a standby/rescue person is required, they will have no other duties and will be positioned outside the confined space entry point at all times while personnel are within the space.

16.14 Electrically Powered Tools and Equipment

All powered hand tools, such as circular saws, drills, chainsaws, percussion tools, jigsaws etc., must be equipped with a constant pressure switch that will shut off the power when the pressure is released. (Exception: this requirement does not apply to concrete vibrators, concrete breakers, powered tampers, jack hammers, rock drills, and similar hand operated power tools).

©Transnet SOC Ltd

Electrical power tools must be of the approved double-insulated type. The electric cord, pneumatic or hydraulic supply line of powered tools must not be used for hoisting or lowering of the tool.

Loose clothing, jewellery or gloves that could get caught in the tool must not be worn when operating powered tools. Operators of powered tools who have long hair must keep their hair tied up.

The power source must be disconnected from the tool before making any repairs, servicing, adjustments, or replacing attachments such as drill bits.

16.15 Pneumatically Powered Tools and Equipment

Pneumatic powered tools must only be driven by filtered compressed air with an in-line lubrication system, or be lubricated prior to use if there is no in-line lubrication system. When using pneumatic powered tools the designated tool pressure must be attained by the use of a regulator.

Pneumatic powered tools must be disconnected when not in use. They must not be disconnected from the air supply until all the residual pressure has been released or contained by a shut-off device. Hoses must not be kinked as a means of containment.

Employees operating pneumatic powered tools, and any potentially affected employee in the vicinity of use, must wear suitable personal protective equipment.
All rotary compressed air tools (e.g. drills) must have the rated revolution per minute (RPM) permanently marked on the casing. Only attachments of compatible RPM must be used with these machines.

The actual RPM of the tool must be checked every three months to ensure that the speed is as rated to manufacture specifications.

Pneumatic powered tools must be secured to the air supply hose by an approved positive means to prevent the tool from becoming accidentally disconnected. Safety clips or retainers must be securely installed and maintained on pneumatic impact (percussion) tools to prevent attachments from being accidentally expelled.

All pneumatically driven nailers, staplers, and other similar equipment provided with automatic fastener feed, which operate at more than 100 kPa pressure at the tool, must have a safety device on the muzzle to prevent the tool from ejecting fasteners unless the muzzle is in contact with the work surface.

Compressed air must not be used for cleaning purposes except where reduced to less than 30 kPa, and then only with effective chip guarding and personal protective equipment in place. The 30 kPa requirement does not apply to concrete form, mill scale and similar cleaning purposes. Compressed air must not be pointed at any part of the body or used for cleaning clothing.

©Transnet SOC Ltd

Airless spray guns of the type which atomize paints and fluids at high pressures must be equipped with automatic or visible manual safety devices which will prevent pulling of the trigger to prevent release of the paint or fluid until the safety device is manually released. A diffuser nut which will prevent high pressure, high velocity release while the nozzle tip is removed, plus a nozzle tip guard which will prevent the tip from coming into contact with the operator, or other equivalent protection must be provided in lieu of the above.

Abrasive cleaning nozzles must be equipped with an operating valve, which must be held open manually to enable operation. A support must be provided on which the nozzle may be mounted when it is not in use.

16.16 Hydraulically Powered Tools and Equipment

Hydraulic powered tools must use only approved fluid that retains its operating characteristics at the most extreme temperatures to which it will be exposed. The manufacturer's stated safe operating pressures for hoses, valves, pipes, filters and fittings must not be exceeded.
Only manufacturer approved hoses, valves, pipes, filters and fittings must be used.

16.17 Hand Tools

Employees required to use hand tools must receive training relevant to the tool and have their competency assessed in the operation, inspection and maintenance of the tool. Where necessary, additional applicable personal protective equipment must be worn when using hand tools.

Wrenches, including adjustable, pipe, end, and socket wrenches, must not be used when the jaws are sprung to a point where slippage occurs. Impact tools such as drift pins, wedges and chisels, must be kept free of mushroomed heads. The wooden handles of tools must be kept free of splinters or cracks.

Adjustable wrenches must not be used in lieu of ring or open-end type spanners, unless a risk assessment has been conducted and the use of the adjustable wrench is approved by the Transnet Contract Manager. Wherever possible, ring spanners must be used in preference to open end spanners.

Correct hand tools for the job must be used, e.g. screwdrivers must not be used as chisels, and pliers must not be used as hammers.

All wedges and drifts that may spring, fly or fall to lower levels upon impact must be fitted with an attachment which attaches a safety "lanyard" to a solid structure to restrain the impact tool from becoming a projectile.

All hand tools used in elevated areas, that may be dropped or fall to lower levels must be fitted with safety lanyards and attached to solid structures or in the case of podges, scaffold keys etc., attached by wrist lanyard to the user.

Purpose built tools and equipment may not be used unless a risk assessment has been conducted and authorised by the Transnet Contract Manager.

©Transnet SOC Ltd

16.17.1 Stanley Knives / Utility Knives

A utility knife must be used as a last resort, when it is the safest tool to use. Always consider alternatives that pose less of a risk to the operator.

Whenever a utility knife is used, ensure that a complete risk assessment is done and that all possible hazards have been addressed.

Only utility knives with retractable blades are to be used. The blade is to be retracted at all times when the knife is not in use or is being stored.

Before using the utility knife, ensure that the tool is in a good condition and the blade is secure in the holder (seated correctly and that there is no play). Ensure that the blade is always sharp and in good condition. This will prevent the use of excessive force.

Always wear cut resistant gloves and safety glasses when using a utility knife. There is always a risk of the blade breaking under tension and becoming a projectile.
Always ensure that you cut away from your body, and that no part of your body is in the firing line.

Always ensure cleanliness of all equipment in use during the cutting operations.

16.18 Inspection of Equipment and Tools

All tools must be inspected by the user before, during and after use. If any faults are identified, the tool must be taken out of service and not used until repaired. Faulty tools that are not able to be repaired must be tagged "out of service" and removed from site.

16.19 Manual Handling and Vibration

Any handling or lifting task that can only be done manually must be planned and rehearsed before the task is done.

If more than one person is involved in a task a communication procedure must be agreed in advance. Lowering the load must be done in a controlled manner. Dropping a load is dangerous and must be avoided.

As a guideline 25 kg is considered to be the limit of what a person can safely handle. Where there are loads exceeding 25 kg the risk of handling the load must be mitigated to assure minimal potential for any injury. When mechanical lifting aids are provided, they should be used. Extra care should be taken when lifting awkwardly shaped objects.

Position the feet correctly. The feet should be placed hip-width apart to provide a large base. One foot should be put forward and to the side of the object, which gives better balance. Bend or 'unlock' the knees and crouch to the load. The weight will then be safely taken down the spine and the strong leg muscles will do the work.

Get a firm grip. The roots of the fingers and the palm of the hand should grip the load. This keeps the load under control and permits it to be distributed more evenly.

Risk Assessment with regards Manual Handling must be conducted and also take into consideration the task factors, physical demands and tools involved in the task.

©Transnet SOC Ltd

As far as possible, exposure to vibration must be eliminated. However, if this is not possible, short-term solutions to decrease exposure include:

- Reducing the vibration levels;
- Removing the person from the vibrating equipment / tools;
- Reducing the period of time that the person works with the vibrating equipment / tools (at least 40 minutes break after 20 minutes working with a machine that vibrates excessively).

In order to reduce exposure to vibration:

- Consider buying equipment that operates effectively at lower speeds;
- Buy equipment with built-in damping materials;
- Buy lighter tools if they are available - they require less of a grip;
- Maintain the equipment;
- Make sure equipment is balanced and there are no worn parts;
- Use remote controls when they are available;
- Reduce your grip on the equipment when it is safe. The less time you actually have your hands on the equipment the better. Relax your hands during these brief breaks;
- Take scheduled breaks; and
- Do other tasks that allow you to move away from vibrating tools and equipment.

The workplace must be assessed by a competent person for compliance with good design, layout and practice, to avoid or minimise adverse health consequences due to manual handling and vibration issues.

Quantitative evaluations of vibration produced by specific equipment must include the following measurement parameters: direction of movement, frequency, intensity, and variation with time and duration, as per documented methods.

Employees and contractors must be informed of the results of assessments and instructed in appropriate manual handling techniques, where the risk assessment indicates a need.

Workplace vibration sources that could contribute to the exceedance of an Occupational Exposure Limit (hence potential for impact on worker musculo-skeletal fitness) must be identified and adequately characterised.

Manual handling tasks assessed as having the potential to cause a Lost Time Injury (i.e. with potential for impact on worker musculo-skeletal fitness) must be identified and adequately characterised.
Workplace manual / materials handling tasks risk rated as "significant" must be assessed and recorded to include biomechanical factors (e.g. posture, bending, twisting, repetitive motions, working overhead, and exerting force away from the body).

16.20 Personal Protective Equipment

PPE requirements for a particular job or for a particular area must be determined through a risk assessment for that job or area. Each contractor must provide each of his employees with all required PPE (at no cost to the employee). The specific PPE that is provided to a particular employee must be based on the nature of that employee's work and the location in which the work is performed (i.e. must be based on the hazards to which the employee

©Transnet SOC Ltd

is exposed).All applicable legislation concerning Personal Protective Equipment (PPE) must be complied with at all times.

As a minimum, the following PPE must be worn by all persons (including visitors) at all times whilst on site:

- Safety footwear with steel toe protection;
- Safety helmet (hard hat); and
- High visibility protective clothing with reflective taping (long trousers and long-sleeved shirts with collars and cuffs).
- Additional PPE requirements must be determined through hazard identification and risk assessment. This hazard-specific PPE (such as hand protection, hearing protection, hard hat, safety goggles, safety glass, face shield and respiratory protection) must be worn as required (e.g. when in a certain area, when performing a certain task, or when working with a certain substance);
- The correct PPE must always be worn:
- In accordance with site requirements (as indicated at the entrances to a site and at the entrances to buildings and / or designated areas on the premises);
- In zoned areas (e.g. noise zones and respirator zones); or
- As required by a Safe Work Procedure, or a Material Safety Data Sheet (MSDS).

Any employee who refuses to wear PPE or does not have all of the required PPE to perform his duties safely, will not be permitted to work.

Each employee must care for his PPE, maintain it in good condition, and inspect it on a daily basis. If an item of PPE has worn out, has become damaged, or is found to be defective in any way, it must be replaced by the contractor.

PPE must be stored in accordance with the manufacturer's requirements and / or recommendations.

Each employee must receive training in the use, maintenance and limitations of the PPE that is provided to him, and must be made aware of why the PPE is necessary as well as the consequences of not wearing it as instructed (i.e. the potential for injury and / or disciplinary action). Training records must be retained.

Symbolic signs indicating mandatory PPE requirements must be prominently displayed at the entrances to the work site and at the entrances to buildings and / or designated areas on the premises where additional PPE is required. These signs must comply with the applicable national standard (if one exists).

Each contractor must appoint an employee to control the issuing and replacement of PPE, keep an up-to-date register as proof of PPE issued (an employee must sign for the items that he receives, maintain PPE stock levels on site and carry out regular inspections to ensure that PPE is being used correctly and maintained in a good, serviceable and hygienic state, and is not being shared between employees.

16.20.1 Head Protection

A safety helmet (or hard hat) worn correctly will help protect the head in the event of:

- An employee being struck on the head by a falling or flying object;

©Transnet SOC Ltd

- An employee striking his head against a fixed or protruding object; or
- Accidental head contact being made with an electrical hazard.

A safety helmet must be worn in accordance with the manufacturer's requirements.
A safety helmet must be worn directly on the head. The wearing of a cap or other headgear beneath a safety helmet is prohibited unless the items have been specifically designed to be used in combination (i.e. the arrangement is approved by the safety helmet manufacturer).

The suspension system inside a safety helmet (that acts as a shock absorber) may not be removed.

The painting of safety helmets is prohibited.

Safety helmets may only be cleaned using a mild detergent and water. No solvents may be used.

16.20.2 Eye Protection

If an employee is carrying out, assisting with, or working adjacent to any activity where sparks or projectile particles are being generated, where chemical mists or fumes are being generated, where liquids may splash or spray, where harmful electromagnetic radiation (heat or light) is being generated, or where there is a risk of wind-blown particles entering the eyes, then suitable protective eyewear must be worn at all times (i.e. safety glasses, safety goggles, a face shield, a welding helmet, or a combination of these).

Such activities include:
- Working with rotating equipment (e.g. grinders, drills, mills, lathes, and saws);
- Welding and cutting;
- Chipping, chiselling or caulking;
- Using explosive powered tools;
- Abrasive blasting;
- Sanding; and
- Working with chemical substances (e.g. drilling fluids, acids, solvents, paints, pesticides, etc.).

For certain activities, special eye protection is required (e.g. a heat-resistant face shield is required when working near molten metal).
Double eye protection is required for activities such as:
- Grinding, cutting, chipping, chasing and reaming (employees must wear both a full face shield and safety glasses or goggles); and
- Arc welding (welders must wear both safety glasses and a welding helmet).

16.20.3 Hearing Protection

Regulations concerning occupational exposure to noise and the use of hearing protection must be complied with as a minimum. "Low noise" tools and machinery must be used wherever possible to reduce noise levels.

©Transnet SOC Ltd

Where noise cannot be reduced to an acceptable level through engineering and work practice controls, measures must be put in place to minimise the exposure of employees to the noise (i.e. administrative controls and personal hearing protection).

Areas where it is likely that the 95% upper confidence limit of an eight hour L_{eq} mean exceeds 85dB(A), or areas where impulse noise exceeds 140dB(C), must be designated as noise zones. These noise zones must be clearly demarcated and mapped, signs must be posted, and all employees must be made aware of the requirements for working in such an area.

Suitable hearing protection must be worn in all designated noise zones and when carrying out (or working in the vicinity of) any activity where the noise level exceeds 85dB(A).

Where hearing protection is required, a hearing conservation programme (applicable to all personnel and visitors) must be implemented. The programme must include training in the correct use and proper storage of hearing protection devices as well as replacement requirements. Training must be provided when hearing protection is first issued to an employee and refresher training must be carried out at least annually thereafter. Training records must be retained.

At least two types of personal hearing protection must be made available to employees. The hearing protection devices provided must have adequate noise reduction ratings (i.e. must be able to attenuate the noise level to below 85dB(A)).

Personal hearing protection must be issued on an individual basis and must not be shared. In addition to personally issued hearing protection, suitable disposable hearing protection must be made available at the entrances to all noise zones.

All Hearing Protection Devices (except for disposable hearing protection) must be properly inspected and cleaned on a regular basis.

16.20.4 Respiratory Protection

Designated areas (respirator zones) must be established where:

- It is likely that the 95% upper confidence limit of a Similar Exposure Group's mean exposure concentration exceeds the relevant Occupational Exposure Limit (OEL) for agents resulting in chronic effects, such as total inhalable dust, respirable dust, respirable crystalline silica, PAH, fluorides, lead, mercury, asbestos or non-asbestos fibrous materials; or
- The concentration of an agent (particulate, vapour or gas) with an acute effect exceeds 50% of the relevant OEL.

Note: For a particular hazardous agent, the OEL to be adopted must be either the client's OEL or the OEL specified in legislation, whichever is the most stringent.

These areas must be clearly demarcated and mapped, signs must be posted, and all employees must be made aware of the requirements for working in such an area.

©Transnet SOC Ltd

Suitable Respiratory Protection Devices (RPDs) must be worn in all designated respirator zones and when carrying out (or working in the vicinity of) any activity where the risk assessment has identified the need for respiratory protection.

Compatibility with the work tasks and other PPE, comfort (as it affects wear-time), and the ability to communicate adequately, must also be considered.

The risk assessment and method statement for the work to be performed, the information contained in the relevant Material Safety Data Sheets (MSDSs), and the results of any air monitoring associated with the substances to be worked with or activities to be carried out, must be used to ensure that the most suitable RPD is selected.

Only RPDs certified to a recognised standard and approved by the Transnet Contract Manager may be used.

Where respiratory protection is required, a respiratory protection programme (applicable to all personnel and visitors) must be implemented.

The respiratory protection programme must include:

- Periodic inspection of RPDs, including before each use;
- Periodic evaluation (by competent persons) of cleaning, sanitising, maintenance and storage practices;
- Performance of positive pressure and negative pressure fit checks by RPD wearers before each use to ensure that the respirator is functioning properly; and
- Training at first issue of a RPD and regular refresher training thereafter in accordance with regulatory requirements or at least once every two years (the training must cover fit testing, use, cleaning, maintenance, filter cartridge replacement, and storage). Training records must be retained.

RPDs must be used, maintained, and stored in compliance with the manufacturer's requirements as well as the respiratory protection programme.

Suitable facilities must be provided for the cleaning and sanitary storage of RPD's.

As a minimum, qualitative and documented fit testing must be carried out (although quantitative fit testing is preferred) to ensure that the use of negative pressure RPDs (including disposable RPDs) is effective. Fit testing must be performed by a competent person when an RPD is first issued and must be repeated periodically in accordance with legal requirements or every two years as a minimum. A policy must be in place requiring a clean shaven face when using a negative or neutral pressure RPD for routine tasks (otherwise a positive pressure RPD must be used). A medical evaluation including a pulmonary function test may be required to determine whether or not an individual is medically fit to wear a respirator.

For air-supplied RPDs, breathing air must be effectively filtered and / or isolated from plant and instrument air, and isolated from sources of potential contaminants. The supplied air must be tested to determine if the air quality complies with the requirements of applicable standards for breathing air.

©Transnet SOC Ltd

For nuisance dust, dust masks with a protection level of at least FFP2 must be worn.

16.20.5 Hand and Arm Protection

Gloves must be worn when handling or working with equipment, materials or substances with the potential to cause injury or illness.
Suitable gloves must be selected based on the task to be performed and the specific hazard against which the employee requires protection, such as:

- Sharp edges;
- Sharp points and splinters;
- Abrasive surfaces;
- Hazardous chemical substances (toxic, corrosive, sensitising, etc.);
- Extreme temperatures; and
- Viruses, bacteria and parasites.

16.20.6 Foot Protection

Safety boots must be worn at all times whilst on site, with the exception of offices and office or administration buildings in which closed athletic, business or similar shoes may be worn. Sandals, slops, slippers, open-toed and high-heeled shoes are not permitted on any work premises.

Safety boots must provide the following protection:

- Steel toe cap to protect against crushing (impact and compression forces);
- Leather uppers that provide resistance against water penetration and water absorption;
- Slip resistant soles;

And where a risk assessment identifies the need:

- Puncture resistant soles (i.e. steel midsoles) for protection against sharp objects;
- Chemical resistant soles for protection against spilt chemical substances (such as solvents, hydrocarbons, acids, and alkalis);
- Heat resistant soles for protection against hot surfaces or molten metal; or
- Electrical shock resistant soles for protection (insulation) against live electrical conductors.
- Gumboots with steel toe caps must be worn when working in water or very wet conditions.

16.20.7 Clothing

All employees working on a work site must wear high visibility protective clothing with reflective taping. Trousers must be long and shirts must be long-sleeved. Shirts must be buttoned at the neck and wrists.

Protective clothing must preferably be made of natural fibres.

Short pants, short-sleeved shirts, sleeveless shirts, and vests are prohibited as outer garments (with the exception of a high visibility vest worn over a long-sleeved shirt). Loose clothing may not be worn where it may become caught in moving machinery or equipment.

©Transnet SOC Ltd

For hot work (e.g. welding, cutting, etc.), work in the vicinity of molten metal, and any work carried out in the vicinity of an open flame, the protective clothing worn (shirt and trousers) must be made of a suitable fire retardant fabric. Underwear and socks must be made of natural fibres (preferably wool) or fire retardant fabric.

No employee may tuck his trousers into his boots when working in the vicinity of molten metal.

16.20.8 Body Protection

Suitable body protection must be provided as required to protect employees against specific hazards. A range of work activities require body protection in one form or another, including but not limited to:

- Working in extremes of temperature, such as firefighting, attending to a heating furnace, working with molten metal, working in refrigerated environments, etc.;
- Hot work (e.g. welding, burning, cutting and grinding);
- Working with hazardous chemical substances (e.g. acids, solvents, pesticides, etc.); and
- Clean up and disposal of hazardous materials and wastes (e.g. asbestos, hydrocarbons, etc.).

A wide variety of protective garments are available, such as firefighting suits, furnace suits, freezer jackets, leather aprons, leather spats, laboratory coats, chemical resistant aprons, chemical resistant (or hazmat) suits, and disposable coveralls.

16.20.9 Electrical Protective Equipment

To reduce the risk of electric shock, electrical insulating equipment appropriate for the voltage that may be encountered must be worn when working on energised electrical installations and when working within two metres of exposed energised conductors.

All rubber electrical insulating equipment (including gloves, sleeves, matting, covers, blankets, and line hoses) must be inspected for damage prior to and after each use, and immediately following any incident that can reasonably be suspected of having caused damage.

Rubber insulating equipment with defects and / or damage may not be used.

Rubber insulating gloves must be electrically tested before first issue and every 12 months thereafter as a minimum. Insulating gloves must also be given an air test along with the daily inspection. Essentially, this involves filling a glove with air and checking for any holes or leakage.

Insulating equipment that fails an inspection or electrical test may be repaired only as follows:

- Rubber insulating line hose may be used in shorter lengths with the defective portion(s) cut off;
- A rubber insulating blanket may be repaired using a compatible patch that results in the patched area having electrical and physical properties equal to those of the blanket;
- A rubber insulating blanket may be salvaged by cutting the defective area off the undamaged portion of the blanket;

©Transnet SOC Ltd

- Rubber insulating gloves and sleeves with minor physical defects, such as small cuts, tears, or punctures, may be repaired by applying compatible patches. The patched areas must have electrical and physical properties equal to those of the surrounding material.

Repairs to gloves are permitted only in the area between the wrist and the reinforced edge of the opening.
Repaired insulating equipment must be retested before it is put back into use.
Insulating equipment must be cleaned as required to remove foreign substances (using a mild detergent).

Insulating equipment must be stored in such a location and in such a manner so as to protect it from light, temperature extremes, excessive humidity, ozone, and other damaging substances and conditions.

Leather protective gloves must be worn over rubber insulating gloves to provide mechanical protection against cuts, abrasions, and punctures.

Suitable arc flash PPE (e.g. voltage rated gloves, fire retardant clothing, arc rated face shield, arc flash hood, arc flash suit, etc.) must be worn whenever an employee is potentially exposed to an arc flash hazard. The appropriate level of PPE must be worn depending on the task and the potential energy exposure. These PPE requirements must be clearly specified as part of arc flash protection programme (refer to the Electrical Safety Standard).

16.20.10 Jewellery
Necklaces, dangling earrings, and bracelets may not be worn on a work site. No ring or watch may be worn where there is a risk that it may become caught in machinery or equipment. No jewellery or other conductive apparel (such as a key chain or watch) may be worn when carrying out energised electrical work.

16.20.11 Hair
Scalp hair that is longer than the top of the shoulders must be tied up and restrained within the person's safety helmet or within the collar of his or her overalls, shirt or jacket.

For negative or neutral pressure Respiratory Protection Devices, facial hair must not cause the seal between the respirator and facial skin to be broken (or prevent a seal from being formed in the first place).

16.20.12 Task-Specific PPE
In addition to the standard PPE required for a work site (including a safety helmet, safety glasses, safety boots, and high visibility protective clothing), the following task-specific PPE must be used as a minimum by any person carrying out or assisting with such a task:
- Grinding – safety glasses or goggles and full face shield (i.e. double eye protection), hearing protection, respiratory protection where dust or fumes may be generated, leather gloves, leather apron, and leather spats;
- Spray Painting – respiratory protection (air-supplied hood for confined spaces), safety goggles (if the respirator design does not provide this protection), hearing protection (where air compressors are used), chemical resistant gloves, and chemical resistant disposable coveralls.

©Transnet SOC Ltd

16.21 Sun Protection

The contractor must ensure that all personnel are protected in sunlight through the use of long sleeve shirts, long trousers, brims, helmets and UV factored sunscreen. Shade structures must also be made available to all employees.

The contractor must conduct training and awareness sessions with his employees, advising on the risks associated with working in the heat (including dehydration) and the precautions to be taken (e.g. ensuring adequate fluid intake).

16.22 Fuel / Flammable Liquid Storage and Refuelling

No fuel (diesel, petrol, paraffin, etc.) or any other flammable liquid (paints, solvents, etc.) may be stored on site unless approved in writing by the Transnet Contract Manager.

If the on-site storage of a fuel or a flammable liquid is approved, the contractor must ensure the following:

- The quantity of fuel / flammable liquid to be stored on site must be kept to the minimum that is required;
- The storage area must be located in a well ventilated area at least 10 metres away from any building, drain, boundary or any combustible material;
- If more than 200 litres of fuel / flammable liquid is to be stored, the tank must be installed / the containers must be positioned within a bund (see Definitions);
- If the fuel / flammable liquid are to be stored in bulk tanks / vessels, then the minimum capacity of the bund must be 110% of the volume of the largest tank / vessel. If many small containers (e.g. 210 litre drums) are to be stored, the bund must be able to contain 25% of the total volume of the stored products;
- The bund must be impermeable. It must have a solid concrete floor and the walls must be constructed out of brick and must be plastered on the inside;
- The bund must be fitted with a lockable drain valve (for draining away rainwater), which must remain locked in the closed position. The valve may only be opened under supervision and in accordance with a written procedure;
- The fuel / flammable liquid storage area may not be used for the storage of any other materials / equipment, and must be kept completely free of all combustible materials (including rubbish, brush and long grass) at all times;
- Access to the storage area must be controlled (wire mesh fencing and gate);
- Appropriate warning signage (i.e. "Flammable Liquid", "No Smoking" and "No Naked Flames") must be prominently displayed at the storage area. The contents and volume of each tank must be indicated;
- In order to contain spillages, the offloading / refuelling bay at the fuel / flammable liquid storage area must have a solid concrete base surrounded by bund walls, ramps or humps and / or spill trenches (covered with steel grating) that lead into a sump;
- Fuel dispensing pumps must be protected against impact damage;
- All fuel / flammable liquid storage tanks and dispensing equipment must be electrically bonded and properly earthed;
- All electrical installations and fittings must be of an approved intrinsically safe type;
- Two 9kg dry chemical powder fire extinguishers must be mounted in an easily accessible position near the entrance gate to the fuel / flammable liquid storage area. Depending on the size of the storage area, additional fire extinguishers may be required to ensure that an extinguisher is no further than 15 metres away from any point on the perimeter of the storage area;

©Transnet SOC Ltd

- A fire extinguisher must be at hand wherever refuelling is carried out;
- Smoking or open flames within 10 metres of a fuel / flammable liquid storage / refuelling area is strictly prohibited;
- No petrol or diesel powered vehicle or equipment may be refuelled while the engine / motor is running;
- Cellular phones must be switched off in fuel / flammable liquid storage / refuelling areas;
- Spill clean-up kits (containing a suitable absorbent fibre product) must be provided;
- Any spillages must be cleaned up immediately and all contaminated cleaning materials must be disposed of in accordance with the applicable legislation;
- If a flammable liquid is spilt or is leaking from a container / vessel, the area must be cordoned off and appropriate warning signage must be displayed to keep unauthorised personnel away from the affected area. Every effort must be made to contain the spillage. All hot work in the vicinity must be stopped immediately. If the spilt product is volatile and the possibility exists that a vapour cloud may form, or if the leak or spillage cannot be contained or stopped, then appropriate emergency response procedures must be activated (refer to Section 14) including the evacuation of all persons in the vicinity. Suitable firefighting equipment must be positioned ready for use should the spilt product ignite;
- The manual decanting of fuel or a flammable liquid from a large container should only be done using a stirrup pump (or similar) or a purpose-made frame which allows the container / drum to tilt for decanting and then return to the upright position;
- Drip trays must be used wherever required;
- All tanks, drums, cans, etc. containing flammable liquids must be tightly closed and properly sealed except for when a container is being filled or when a product is being decanted;
- The transport or storage of corrosive or flammable liquids in open containers is strictly prohibited
- Daily-use quantities of fuel (up to a maximum of 20 litres) must be handled in an approved safety can with a flash arresting screen, spring closing lid and spout cover that will safely relieve internal pressure if the can is exposed to fire;
- Where safety cans may be impracticable, only approved metal containers with screw caps may be used. Each container must be clearly labelled to indicate its contents;
- Only small quantities of flammable liquids (paints, solvents, etc.) may be stored within a building. Each product must be kept either in its original container or in an approved container which must be properly sealed. Each container must be clearly labelled to indicate its contents. When not in use, all such containers must be stored in a well-ventilated steel cabinet which must be kept locked to prevent unauthorised access;
- Not even small quantities of flammable liquids may be stored or dispensed in buildings or places of public assembly, in general warehouses, or in buildings containing sources of ignition such as space heaters, cooking devices, open electric motors, motor vehicles, or where welding, cutting, or grinding activities are being carried out;
- Safe Work Procedures must be compiled for the transportation (including delivery), offloading, storage, handling and use of any fuel / flammable liquid on site;
- All personnel that will be required to work with or may come into contact with a flammable liquid must be made aware of the hazards associated with the product and must be thoroughly trained in the safe transportation, use, handling and storage thereof.

©Transnet SOC Ltd

16.23 Fire Protection and Prevention

The contractor must compile a Fire Protection and Prevention Plan for the work that will be carried out on site.

The contractor must assess / survey his area of responsibility and identify locations where the risk of fire is high. Cognisance must be taken of the fact that certain locations may need to be designated as high risk due to the presence of large quantities of flammable or combustible materials / substances. For all high risk areas, the contractor must ensure that additional precautions are taken to prevent fires and strict control is exercised over any hot work (i.e. welding, cutting, grinding, etc.) that is carried out.

The contractor must supply and maintain all required firefighting equipment. The type, capacity, positioning, and number of firefighting appliances must be to the satisfaction of the Transnet Contract Manager and must meet the requirements of the applicable legislation. Fire mains, hydrants and hose reels will rarely be available on site, so use must primarily be made of portable fire extinguishers.

Firefighting equipment, fixed and portable, must be strategically located with a view to being able to rapidly deploy the equipment in order to bring potentially dangerous and destructive fires under control while still in their infancy.

All fire extinguishers (and any other firefighting equipment) placed on site must be:

- Conspicuously numbered;
- Recorded in a register;
- Visually inspected by a competent person on a monthly basis (the results of each inspection must be recorded in the register and the competent person must sign off on the entries made); and
- Inspected and serviced by an accredited service provider every six months (the Transnet Contract Manager may require that this frequency be increased depending on the environmental conditions (e.g. high dust levels, water, heat, etc.) to which the fire extinguishers are exposed).

Any fire extinguisher that has a broken seal, has depressurised, or shows any sign of damage must be sent to an accredited service provider for repair and / or recharging. Details must be recorded in the register.

Firefighting equipment may not be used for any purpose other than fighting fires. Disciplinary action must be taken against any person who misuses or wilfully damages any firefighting equipment.

Access to firefighting equipment, fixed or portable, must be kept unobstructed at all times.

Approved signage must be in place to clearly indicate the location of each permanently mounted fire extinguisher, fire hose reel, etc.

The contractor must ensure that all persons working in / entering his area of responsibility are made aware of where all firefighting appliances and alarm points are located.

©Transnet SOC Ltd

The contractor must ensure that his employees (and those of any appointed sub-contractors) are trained in firefighting procedures and the use of firefighting equipment.

The contractor must compile an emergency response procedure detailing the actions that must be taken in the event of a fire or a fire / evacuation alarm (see Section 14). All personnel working within the contractor's area of responsibility must be trained, and all visitors must be instructed, on this procedure. Copies of the procedure must be prominently displayed in the workplace in all languages commonly used on the site.

A person discovering a fire must extinguish the fire if he can do so safely, and then immediately report the incident to his supervisor. If the person cannot extinguish the fire, he must raise the nearest alarm and then report the fire as quickly as possible to his supervisor, the person responsible for the area, and / or Security.

On hearing a fire / evacuation alarm, all persons must make any operational plant or equipment safe, and then proceed to the nearest emergency assembly point and await instructions.

All incidents of fire (including the use or misuse of any firefighting equipment) must be reported to the Transnet Contract Manager immediately. Used fire extinguishers must be replaced by the contractor without delay.

No hot work (i.e. welding, cutting, grinding, etc.) or any other activity that could give rise to a fire may be performed outside of a designated workshop without a Permit to Work having been issued.

Wherever hot work is being carried out, a fire extinguisher must be at hand. Where the risk assessment determents that it is necessary, a fire watch must be stationed.

Supervisors must carry out workplace inspections regularly to ensure adherence to fire prevention measures and procedures.

At the end of every working period (i.e. before each tea / lunch break and at the end of every shift / day), the workplace must be thoroughly inspected to ensure that no material is left smouldering and no condition / situation exists that could give rise to a fire.

The contractor must ensure that all supervisors and all employees carrying out or assisting with any hot work or any other activity that could give rise to a fire have been trained in firefighting procedures and the use of firefighting equipment. The training must be conducted by an accredited training provider.

When using electrical equipment, all cables must be in good condition and the nearest convenient socket must be used.

No power socket may be loaded beyond its rated capacity through the use of adaptors, etc.

Makeshift electrical connections are not permitted under any circumstances.

©Transnet SOC Ltd

Water-based firefighting equipment must not be used on electrical equipment or burning liquids.

Each vehicle used on site for work purposes and each item of mobile equipment with a diesel or petrol engine must be fitted with a permanently mounted fire extinguisher.

Smoking is only permitted in designated smoking areas. Cigarette ends / butts must be properly stubbed out in the ashtrays provided and never thrown into waste bins.

The contractor must ensure that good housekeeping practices are enforced, as this is crucial to the prevention of fires.

All combustible waste materials must be removed from the workplace on a daily basis (at the end of each shift) and placed in waste receptacles located at least 5 metres away from any structure.

The accumulation of waste materials in out-of-the-way places is prohibited. Offices, desks, cabinets, etc. must always be kept tidy and uncluttered. Waste paper bins must be emptied regularly.

The storage of combustible materials under stairways or in attics is prohibited. The storage of any materials against the exterior of a building or any other structure is prohibited.

All walkways, passages and stairways must be kept clear (i.e. must be unobstructed) at all times, as they may need to be used as a means of escape. The areas around and the routes to all exits, fire escape doors, fire hydrants, fire hose reels and fire extinguishers must be kept clear (i.e. must be unobstructed) at all times.

"No Smoking" signs must be conspicuously displayed in and around all storage areas / rooms.

Waste may not be burned under any circumstances.

No flammable liquid (such as petrol, acetone, alcohol, benzene, etc.) may be used for starting fires or as a solvent for cleaning clothes, tools, equipment, etc. Only solvents approved by the Transnet Contract Manager may be used for cleaning purposes.

Whenever any work is carried out involving the use of a flammable substance / material, the area must be cordoned off and appropriate warning signage (i.e. "No Unauthorised Entry", "No Smoking" and "No Naked Flames") must be displayed.

16.24 Smoking

The contractor must not permit smoking on site except within designated smoking areas selected in accordance with the applicable legislation. Such an area must be clearly demarcated and the required signage must be displayed.

Any person found smoking or discarding a cigarette butt outside of a designated smoking area may be removed (temporarily or permanently) from site. In all designated smoking

©Transnet SOC Ltd

areas, adequate non-combustible commercial ashtrays and / or cigarette butt receptacles (butt cans) must be provided.

Ashtrays and other receptacles provided for the disposal of smoking materials must not be emptied into rubbish bins or any other container holding combustible materials.

"No Smoking" signs must be strictly observed.

16.25 Housekeeping

The contractor must maintain all work areas in a tidy state, free of debris and rubbish. Unless directed otherwise, the contractor must dispose of all debris, rubbish, spoil and hazardous waste off site in a designated and authorised area or facility. The contractor must familiarise himself with the waste management plan for the site including collection and disposal arrangements, and must align his waste management activities accordingly.

In cases where an inadequate standard of housekeeping has developed and compromised safety and cleanliness, a Transnet Contract Manager may instruct the contractor to cease work until the area has been tidied up and made safe.

Neither additional costs nor contract deadline extensions will be allowed as a result of such a stoppage. Failure to comply will result in a clean-up being arranged through another service provider at the cost of the non-complying contractor.

The contractor must carry out housekeeping inspections on a weekly basis to ensure maintenance of satisfactory standards. The contractor must document the results of each inspection. These records must be maintained and must be made available to the Transnet Contract Manager on request.

The contractor must implement a housekeeping plan for the duration of the contract ensuring that the site housekeeping is maintained. Furthermore, at the end of every shift, the contractor must ensure that all work areas are cleaned, all tools and equipment are properly stored, and construction rubble is removed.

Where the contractor fails to maintain housekeeping standards, the Transnet Contract Manager may instruct the contractor to appoint a dedicated housekeeping team at the contractor's expense.
Littering is prohibited.

16.26 Waste Management

Waste may not be disposed of unless the disposal of that waste is authorised by law. The contractor must therefore ensure that all waste that is generated is handled, stored, transported and disposed of in accordance with the requirements of the applicable legislation / local authority.

No waste may be removed from the site to a waste storage or disposal facility unless that facility has been approved or licenced waste facility. Approved/licensed waste disposal service providers must be used for any waste removed from site. These service providers must be audited on a two-yearly basis (or more frequently if deemed necessary based on risk) in order to ensure compliance with legislation and to help ensure that no liabilities accrue to the contract.

©Transnet SOC Ltd

An adequate number of waste bins and skips must be provided by the contractor and suitable arrangements must be made to ensure that these bins and skis are emptied regularly. Hazardous wastes must be kept separate from general wastes.

16.27 Stacking and Storage

All irregular shaped items will be stacked at floor / ground level in designated stacking areas on a level, firm base capable of withstanding the weight of the commodities being stacked and stacked in such a manner that the items do not topple over or change position due to subsidence or weight transfer when being moved.

Where these commodities are stacked on shelves or racks, the shelves or racks must be designed to carry the weight of the commodity being stacked.
All racks or shelves where heavy material or commodities are stacked will have a weight carrying limitation clearly marked on the structure and have a safety factor of at least +10% of maximum total carrying capacity.

All materials, commodities or articles, which could be damaged due to inclement weather, must be stored under cover.

Waste material that is combustible must not be allowed to accumulate in sufficient quantities to create a hazard.

No commodities or equipment may be stacked or stored within 500mm of rolling stock tracks or where mobile equipment travels.

The storage of material, small equipment, tools, files and general items in cupboards and on shelves must be neat and controlled at all times. Incompatible substances must not be stored in or on the same cupboard or shelf.

No equipment, tools, files or documents may be stored or stacked on top of cupboards which are higher than 1.5 metres in height.

16.28 Demarcation

Temporary demarcation in the form of hazard tape (red and white) may be used to demarcate areas where there is, for relatively simple reasons, restricted access.

Where hazards exist and entry must be specifically excluded for safety or health reasons, hazard tape in any form must not be used in isolation. A robust and substantial barrier of timber, rope or other material must be used in conjunction with barrier tape, to prevent entry to unauthorised persons.

Outside storage areas where it is impractical to use floor demarcation, demarcation may take the form of creosote poles and wire rope or similar. Spans between uprights should be painted yellow.

16.29 Facilities

The Contractor must in addition to Facilities Regulations 2004, provide at or within reasonable access of every site, clean, hygienic and maintained facilities.

©Transnet SOC Ltd

Sanitary conveniences must be provided and maintained at a rate of at least one shower facility for every 15 workers, at least one sanitary facility for each sex and for every 30 workers, separate male and female changing facilities and sheltered eating areas. (Check SANS 10400 Part F).

Where chemical toilets are provided, one toilet for every twenty five employees must be allocated.

All toilets must be cleaned daily, disinfected and provided with toilet paper. All employees making use of these facilities have the responsibility to help keep the facilities neat, clean and hygienic.

Washing facilities, including soap and towels, must be made available for use by the contractor's employees.

Drainage from all washing / toilet facilities must be properly designed and constructed to prevent employee exposure to waste water (and the associated biological hazards). Waste water may not accumulate or stand in pools at any location on the project site.

Change rooms must be provided and must be kept clean and free from odours at all times.

No chemicals or equipment or items (other than those normally associated with for cleaning of these hygiene facilities) may be stored in the facilities.

All entrances must be constructed in a way to afford privacy to users.

Drinking water must be provided.

A sheltered (covered) area must be set aside on site to be used as a dining facility (eating area). Adequate seating must be provided for the maximum number of employees. The facility must be kept clean and tidy. Food may only be consumed in authorised sheltered areas.

A suitably sized, impervious receptacle (bin) must be provided for the disposal of waste food and other refuse generated at the dining facility. This bin must be emptied and cleaned regularly (i.e. promptly after meal times).

Adequate storage must be provided to the contractor's employees for the storage of food and drinks. Where fridges are provided, they must not be overstocked and must maintain sufficiently low temperatures.

16.30 Occupational Hygiene

The contractor must ensure that the exposure or potential exposure of his employees to any of the following stressors is assessed and measured to determine the effectiveness of control measures as well as compliance with legal and other requirements, particularly Occupational Exposure Limits.

- Noise;
- Thermal stress (heat and cold);

©Transnet SOC Ltd

- Particulates (dust);
- Silica (free crystalline silica);
- Asbestos;
- Gases or vapours;
- Lead;
- Chemicals;
- Ionising radiation;
- Non-ionising radiation;
- Vibration (hand / arm vibration and whole body vibration);
- Ergonomics; and
- Illumination.

A baseline survey must be carried out by an Approved Inspection Authority: A plan for measuring and monitoring occupational exposure must be developed by the contractor. All monitoring results obtained must be analysed on a regular basis to:
• Identify trends and potential exceedances of legal or other requirements (such as Occupational Exposure Limits);
• Identify inconsistent or unusual results;
• Evaluate the effectiveness of existing control measures;
• Measure performance against stated objectives; and Identify continual improvement opportunities.

Each exceedance of a specified requirement or limit must be recorded, investigated and reported. Appropriate corrective actions must be identified and implemented

16.31 Lighting

For all work areas and access ways, if the natural lighting available is inadequate it must be supplemented by artificial lighting to meet the minimum levels required.

A lighting survey to determine luminance must be conducted for all work areas, at least once every two years and prior to work commencing for the first time in any area. Measurements do not need to be conducted by an Approved Inspection Authority for Occupational Hygiene

Emergency lighting must be provided in all indoor workplaces that do have adequate natural lighting or in which persons work at night. The emergency sources of lighting that are provided must be such that, when activated, an illuminance of not less than 0.3 lux is obtained at floor level, to enable employees to evacuate safely.

Where it is necessary to stop machinery or shut down plant or processes before evacuating the workplace, or where dangerous materials are present or dangerous processes are carried out, the illuminance must be not less than 20 lux.

Windows and translucent sheeting must be kept adequately clean and clear of obstructions as far as reasonably practicable. Light fittings, i.e. lenses and reflectors must be kept clean.

If a light intensity meter is used, a valid calibration certificate must be available.

©Transnet SOC Ltd

Neon lights must not be installed in areas where moving parts of machinery or equipment cannot be fully guarded, i.e. lathes, bench grinders, etc. in order to eliminate the stroboscopic effect.

No person may use a portable electrical light where the operating voltage exceeds 50 volts, unless:

- It is fitted with a non-hydroscopic, non-conducting handle;
- All metal parts which may become live are protected against accidental contact;
- The lamp is protected by means of a guard firmly attached to the handle; and
- The cable can withstand rough use.

No person may use a portable electric light in damp or wet conditions or in closely confined spaces, inside metal vessels or when in contact with large masses of metal, unless:

- The lamp is connected to a source incorporating an earth leakage; and
- The operating voltage of the lamp does not exceed 50 volts.

16.32 Hearing Conservation

A hearing conservation program must be implemented and protection against the effects of noise exposure must be provided when the noise exposures equal or exceed an 8-hour time-weighted average sound level of 85 decibels measured on the A-weighted scale of a standard sound level meter at slow response.

For the hearing conservation program to be effective it must include as a minimum:

- Monitoring of the workplace to determine the representative exposure of employees to excessive noise levels;
- An audiometric testing program for employees, which must include:
  - A baseline audiogram for all employees exposed to noise levels equal to or in excess of the standard;
  - Annual audiograms for each overexposed employee;
  - Analysis of audiogram results with retesting and/or referral to an otolaryngologist or qualified physician when a significant threshold shift (STS) occurs; and
  - Written employee notification of the STS.
- A training program for all employees exposed to noise;
- Provision of personal protective equipment to all affected employees when administrative or engineering controls fail to reduce sound levels to within the levels of the standards.

Monitoring of employee exposures to noise shall be conducted by an Approved inspection Authority. The monitoring requirement may be met by either area monitoring or personal monitoring that is representative of employee exposures. Personal monitoring is preferred, and may be required based on the type(s) of noise sources.

For purposes of the hearing conservation program, employee noise exposures shall be computed in accordance with legislation.

A person-task specification shall be available for every job category and shall be submitted with an employee for audiometric testing.

©Transnet SOC Ltd

Audiometric testing and an annual audiogram shall be conducted by a competent person and provided as part of the regular medical examinations. Audiometric test results obtained from the pre-employment medical examination for a new employee shall be used as the baseline audiogram. Testing to establish a baseline audiogram shall be preceded by at least 14 hours without exposure to workplace noise.

Hearing protectors shall not be used as a substitute for the requirement that baseline audiograms be preceded by 14 hours without exposure to workplace noise. Employees shall be notified of the need to avoid high levels of non-occupational noise exposure during this 14-hour period.

Record-keeping for the audiogram shall include:
- Name and job classification of the employee;
- Date of the audiogram;
- The examiner's name;
- Date of the last acoustic or exhaustive calibration of the audiometer;
- Employee's most recent noise exposure assessment.

Audiometric test results shall be maintained in the employee's medical file.

Personal protective equipment shall be provided and replaced as necessary at no cost to employees. Supervisors shall ensure that hearing protective devices are worn by all employees who are exposed to a time-weighted average of 85 decibels or greater and who have experienced a significant threshold shift. Employees shall be given the opportunity to select their hearing protectors from a variety of suitable protectors.

Noise zones shall be indicated my means of signs at every entrance to such zones.
When noise levels exceed 100 dB(A), a combination of earplug and earmuff may be required to achieve protection of the worker. Hearing Protection Devices should be worn for the full noise exposure period.

16.33 Particulate and Gas / Vapour Exposures

The concentration of an HCS in the air is, or maybe, such that the exposure of employees working in that workplace exceeds the recommended limit without the wearing of respiratory protective equipment, is zoned as a respirator zone.

Designated areas must be created where:
- It is likely that the 95 per cent upper confidence limit of a Specific Exposure Group's (SEG) mean exposure concentration for agents resulting in chronic effects (such as total inhalable dust, respirable dust, respirable crystalline silica, PAH, fluorides, lead, mercury, asbestos or non-asbestos fibrous materials) exceeds the relevant OEL; and
- Agents with an acute effect, such as particulate hazards, or gases (e.g. CO, SO2, NH3, HF, etc.), or vapours exceed 50 per cent of the relevant OEL.

Designated areas must:

©Transnet SOC Ltd

- Be identified and mapped, signposted or otherwise clearly communicated to employees working in the area. Signposting, where necessary, must use appropriate wording or symbols on signs to identify the hazard;
- Have a documented respiratory protection programme based on suitable risk assessment and standards, which is applied to employees, contractors and visitors;
- Have regular monitoring of SEGs working in the area; and
- Have a formal review of the practicality of engineering controls at least every two years, or less where it is a critical control for a significant risk.

Particulate and gas / vapour monitoring must be appropriate to the exposure conditions and toxicants, and based on the use of equipment approved by local regulatory authorities, as per documented methods.

Where risk assessment indicates the possible presence of levels of gas or vapour sufficient to cause health effects in less than one shift (e.g. confined space entry), continuous monitoring is required as long as the potential for harm exists.

Employees and contractors must be covered by a medical surveillance programme when:

- Their Specific Exposure Group TWA mean exposure to respirable crystalline silica, total inhalable dust, respirable dust, lead or asbestos is greater than 50 per cent of the relevant OEL;
- The medical adviser considers that it is advisable; or
- There is a legal requirement for medical monitoring.

Where risk assessment indicates a risk of a respiratory condition, assessment programmes must include chest x-rays and / or lung function tests. The test or tests chosen must enable the earliest detection of adverse effects from the exposure of concern. Where indicated, they must meet the following standards:

- High quality chest x-rays will be taken every five years, unless local legislation requires these to be more frequent;
- All chest x-rays for pneumoconiosis surveillance will be read to International Labour Organisation (ILO) standards by an ILO B reader, wherever possible, and if not, by a competent radiologist using verifiable quality criteria;
- Any progression of more than one step on the ILO extended scheme to a reading above 1/0 will be reviewed by a physician;
- Any reading suggesting active lung disease will be reviewed by a physician; and
- All spirometry will be performed by trained staff following the American Thoracic Society guidelines or equivalent and be offered at a frequency determined by the likely rate of detectable change in lung function.

Controls must be of an adequate standard such that surfaces are adequately cleaned to avoid:

- Dust generation due to material dislodgment (e.g. windblown), where practicable; or
- Fume generation from accumulated dust during welding / heating or cutting operations.

Where risk assessment indicates the need to reduce exposures to toxic substances for employees or their families, good personal hygiene must be enforced. The programme must include:

- No smoking, eating or drinking in designated hazard areas;

©Transnet SOC Ltd

- Washing of hands and face prior to drinking, eating or smoking;
- Showering at work post shift or after exposure to 'dirty' conditions; and
- Laundering of contaminated clothing by the contractor.

Abrasive blast cleaning must be conducted so as to protect worker health and minimise dust emissions. Substitutes must be used whenever practicable for abrasives containing crystalline silica. However, if such abrasives are used, workers must be aware of the hazards and exposure monitoring conducted. The hazardous properties of alternative materials must be considered before use.

Where required, training in the recognition of signs and symptoms of hazardous particulate and gas / vapour exposure, emergency procedures and preventative measures must be provided.

16.33.1 Respiratory Protection Devices

The selection of Respiratory Protection Devices (RPD's) must be based on:

- The potential particulate size distribution, gas / vapour types, substance toxicity and likely concentrations;
- Compatibility with the work tasks and other PPE; and
- Comfort (as it affects wear-time) and allowance for adequate communication.
- The type(s) of airborne contaminants that are present (gases, vapours, and particulates and aerosols including dusts, fumes, sprays, mists, and smoke);

Only RPD's approved by the Transnet Contract Manager may be used. Suitable facilities must be available for cleaning and sanitary storage of RPD's.

Half-mask and full-face air-purifying respirators must NOT be used where:

- The atmosphere is oxygen deficient (< 19.5 per cent);
- The atmosphere is immediately dangerous to life or health (e.g. in areas where CO concentrations are > 1500 ppm, HF > 30 ppm or NH4 > 300 ppm);
- Gases and vapours are more than ten times their OEL or greater than 1000 ppm for half-mask respirators, or more than 100 times their OEL for full-face respirators; or
- Particulates are more than five times their OEL for half-mask respirators, or more than 50 times their OEL for full-face respirators.

For atmospheres that are oxygen deficient, or contain unknown hazards, or have concentrations of gases and vapours that are unknown, or could potentially exceed levels that are immediately dangerous to life or health, an air-supplied type respirator must be worn.

For effective use of negative pressure RPD's (including disposable RPD's), fit testing must be qualitative and documented as a minimum, although quantitative fit testing is preferred. Fit testing must be performed by a competent person when RPD's are first issued and must be repeated periodically according to legal requirements or two-yearly as a minimum frequency. There must be a policy requiring a clean shaven face when using a negative or neutral pressure RPD for routine tasks, or the use of a positive pressure RPD will be required. A pulmonary function test and medical evaluation may be required to determine whether or not an individual is medically fit to wear a respirator.

©Transnet SOC Ltd

For air-supplied RPD's, breathing air must be effectively filtered and / or isolated from plant and instrument air, and isolated from sources of potential contaminants. The quality of the breathing air must be checked for conformance with applicable standards.

The respiratory protection programme must include:

- Periodic inspection of RPD's, including before each use;
- Periodic evaluation of cleaning, sanitising, maintenance and storage practices by competent persons;
- Performance of positive and negative fit checks before each use by RPD wearers to ensure that the respirator is functioning properly; and
- Training at first issue of a RPD and regular refresher training thereafter in accordance with regulatory requirements or at least once every two years.

16.33.2 Asbestos and Non-asbestos Fibrous Silicates

This section applies to asbestos and bio-persistent non-asbestos fibrous silicates that may display asbestos-like toxicity, related to fibre diameter and length. Local regulations must be followed as a minimum. The following requirements must be met:

- A management program must be in place and actively pursued;
- No new products containing these materials may be purchased;
- Installed materials of this type must be identified and assessed annually for current safety. Where 'safe in place', it should not be removed, unless there is an opportunity for removal during renovation or construction of buildings or equipment;
- Work areas must be barricaded off and signposted to restrict entry; and
- Contaminated material must be promptly placed in appropriate marked plastic disposal bags or covered containers for disposal to an approved landfill.

All workers exposed to these materials must be on a register. "Exposed" means working on or near such material that has been disturbed, abraded or cut. The register must contain details of their annual medical examination and the results of occupational hygiene monitoring.
Asbestos contractors must be competent, registered and have adequate equipment, procedures and monitoring.

Where required, the asbestos / bio-persistent non-asbestos fibrous silicates management programme must cover work practices, training, monitoring, medical surveillance, and waste handling and disposal.

Maintenance operations must be made aware of potential cristobalite exposure hazards when disturbing non-asbestos fibrous silicates that have undergone high temperature conditions.

The potential for occurrence of naturally occurring asbestos materials in exploration or mining production activities must be assessed, the risk of exposure determined and appropriate control measures implemented where required.

16.34 Hazardous Chemical Substances

No chemical substance may be brought onto site unless it appears on the Chemical Substances Register which will be developed and kept by the contractor.
The register will contain the following information:

- Trade name / product name of substance;

©Transnet SOC Ltd

- Manufacturer / supplier of substance;
- Maximum inventory;
- Storage requirements and precautions;
- Inventory of special emergency items held for handling spillages, fires, etc. (e.g. reagents to neutralise spillages, firefighting foam, etc.); and
- Approved disposal methods.

The contractor must ensure that a Material Safety Data Sheet (MSDS) is obtained for each chemical substance brought onto site. A file, or files, containing all of the MSDS's must be maintained and must be readily available to all personnel on site (particularly first aiders) as well as other potentially affected parties (e.g. emergency services personnel, persons from the local community, etc.). The MSDS's must be in the language(s) commonly used on site.

The contractor must appoint a trained and competent Hazardous Chemical Substances Coordinator who understands and is able to evaluate the risks associated with a wide variety of substances. This person shall be responsible for:

- Assessing the hazardous properties and risks associated with all chemical substances brought onto site by the contractor and appointed sub-contractors (using the MSDS's);
- Determining precautions and safe practices for transportation, use, handling, storage and disposal (including PPE requirements) (using the MSDS's);
- Determining first aid and emergency response requirements / procedures (using the MSDS's);
- Maintaining the MSDS file;
- Managing and monitoring the consumption of inventory; and
- Providing an "as needed" service to site personnel and suppliers.

The risks associated with the transportation, use, handling, storage and disposal of all hazardous chemical substances brought onto site must be assessed and managed by the contractor through a process that incorporates risk reduction using the hierarchy of controls. The contractor must provide Safe Work Procedures for the transportation, use, handling, storage and disposal of all hazardous chemical substances to be used on site.

Whenever a task-based risk assessment is carried out, consideration must be given to the use of chemical substances (e.g. greases, solvents, etc.).

The contractor must provide his employees with all of the Personal Protective Equipment that is necessary to prevent exposure / injury while handling / using the hazardous chemical substances that they will be required to work with. Appropriate PPE must be selected with consideration given to the potential hazards, permeability, penetration, resistance to damage and compatibility with the work tasks.

The contractor's employees must be trained in the safe transportation, use, handling, storage and disposal of the hazardous chemical substances that they will be required to work with or may come into contact with. The training must specifically address PPE requirements (including the correct selection, fitment and use thereof).

©Transnet SOC Ltd

All personnel must be trained to understand the potential health effects associated with exposure to hazardous chemical substances and therefore the importance of Safe Work Procedures and PPE. All personnel must be trained on emergency response procedures and first aid measures.

Behaviour-based observations and coaching must include the use / handling of hazardous chemical substances.

An appropriate occupational exposure monitoring and medical surveillance programme must be in place for all personnel potentially exposed to hazardous chemical substances which have the potential to cause immediate or long-term harm.

Emergency showers and eyewash stations must be provided where required by law, or where a risk assessment indicates a need. The emergency showers and eyewash stations must be appropriately located, signposted, and regularly tested and maintained. Employees must receive training on the location and use of the showers / eyewash stations.

An emergency response plan for incidents involving hazardous chemical substances must be in place. Regular and appropriately staged emergency drills (possibly involving external spill response and ambulance support services) must be held and lessons learnt must be incorporated into the emergency response plan.

The contractor must provide appropriate storage facilities for all hazardous chemical substances to be used on site. The storage facilities must be secure and protected from damage. They must also be designed for easy access for firefighting purposes. Where applicable, the storage facility must protect chemical containers from physical damage due to temperature extremes, moisture, corrosive mists or vapours, and vehicles.

The inventory of hazardous chemical substances stored on site must be kept to a minimum. The quantity of each chemical stored must be justifiable.

Storage and segregation requirements for all hazardous chemical substances to be used on site must be based on:

- The quantities of the substances stored;
- The physical state of the substances (solid, liquid or gas);
- The degree of incompatibility; and
- The known behaviour of the substances.

Access to areas where hazardous chemical substances are stored and handled must be limited and controlled.

Every chemical substance container must be adequately and clearly labelled to identify its contents, to indicate precautionary requirements for the substance, and to indicate the date of expiry (if applicable). Pipes used to transfer / convey / distribute chemical substances must be clearly identified (e.g. colour coding). Directional flow must be indicated where practical.

©Transnet SOC Ltd

Before any item, equipment or empty container containing a chemical residue is disposed of as general waste, it must be properly decontaminated (where applicable). Before being disposed of, empty chemical containers must also be rendered unusable for carrying water (by puncturing, cutting or crushing them).

Hazardous chemical substance waste (i.e. redundant / expired hazardous chemical substances, containers containing residues, contaminated items / materials, etc.) must be disposed of in accordance with the applicable legislation.

Maintenance, inspection and testing schedules and procedures must be in place for critical equipment associated with hazardous chemical substances. A system must be in place to ensure that the risks are assessed before any changes are made to equipment and / or processes for the transportation, storage, handling, use or disposal of a hazardous chemical substance.

A programme must be in place to continually investigate possibilities / opportunities for replacing hazardous substances with safer alternatives.

16.35 Radiation

The risks associated with ionising (from naturally occurring radioactive minerals (NORM), radon, and man-made sources), ultra violet (UV) and electromagnetic field (EMF) radiation exposure must be assessed by a competent person.

There must be an inventory of all radiation sources that have the potential to cause adverse health effects. For each radiation source, the type of radiation (e.g. radioisotope, radon, x-ray, EMF, laser, etc.), the strength of the radiation, and the location must be recorded.

Where risk assessment indicates the need, a documented radiation management programme must be developed such that:

- All types of radiation sources are adequately characterised and described;
- Exposures are eliminated or reduced to as low as reasonably practicable (ALARP);
- A clearly defined chain of responsibility (with duties) is provided; and
- Education is provided for employees regarding radiation safety, including the radiation management programme elements.

The ionising radiation management programme must meet all applicable regulatory requirements, and as a minimum must include the following elements (as applicable):

- Surveyed radiation areas and quantification of exposure sources / levels;
- Exposure and medical monitoring programmes based on established investigation levels;
- Transport of radioactive materials in compliance with international radiation transport regulations, when no local regulations are in place;
- Waste monitoring and disposal programmes;
- Feedstock and equipment checks for naturally-occurring ionising radiation;
- Clearance and control procedures for all contaminated materials and equipment leaving or arriving at site (including scrap);
- Leak (wipe) tests on sealed radioactive containment equipment;

©Transnet SOC Ltd

- Lock-out procedures for vessels and equipment containing radioactive sources and radon decay product measurement prior to entry;
- Emergency procedures;
- Environmental impact risk assessment (air, water, waste, foods, etc.);
- Product / waste life cycle control; and
- Dose assessment for employees and critical exposure groups, according to documented methods and by a competent person.

Areas with ionising radiation with annual doses greater than 5 milli Sieverts (mSv) must be designated as restricted access or controlled areas. These areas must be identified and mapped, signposted or otherwise clearly communicated to employees working in the area.

Each person whose potential exposure exceeds 5 mSv per annum or who is a designated radiation worker must undergo periodic personal radiation monitoring and medical surveillance designed to show continued fitness for radiation work.

All sources of ionising radiation must be managed in use and when they are either disposed of or securely stored in accordance with local regulations. Each operation where individual worker's exposures could exceed 5 mSv per annum must have a trained radiation protection adviser or ready access to a trained protection consultant.

There must be documented procedures for the inspection, assessment and maintenance of the controls, and emergency procedures to deal with incidents involving ionising radiation sources (including fire and explosions). All controls must be reassessed annually to ensure their continued effectiveness and that operating practices are in accordance with written procedures.

16.36 Thermal Stress

Hot areas or activities where employees have experienced or could experience excessive fatigue, muscle cramp, dehydration, dizziness and other symptoms of heat stress must be identified and described.

Where a risk of thermal stress is determined, a competent person must conduct monitoring surveys on site, in consultation with workers.

For defined extreme thermal conditions and job activities, medical examinations must include information about the operator's physiological and biomedical aspects, and an assessment of fitness for the working conditions.

Cold areas or activities where employees have experienced or could experience pain or loss of feeling in extremities, frostbite, severe shivering, excessive fatigue and other symptoms of cold stress must be identified and described.

Workplace thermal stress levels (temperature, air movement, humidity, etc.), activities (work level, etc.) and conditions (clothing, health, etc.) that have the potential to exacerbate thermal stress effects must be adequately characterised and described. Workplace exposure assessment must be repeated according to regulatory requirements or whenever there is a change in production, work organisation, process or equipment which may impact thermal stress levels.

©Transnet SOC Ltd

Detailed heat stress assessment of identified tasks or jobs must be tiered to:

- Commence with the use of a simple heat stress index as a screening tool; then, if necessary;
- Use rational heat stress indices in an iterative manner to determine the 'best' control methods for alleviating potential heat stress; and
- Undertake physiological monitoring when exposure times are calculated to be less than 30 minutes, or where high level PPE that limits heat loss must be worn.

Detailed cold stress assessment of identified tasks or jobs must be conducted according to current appropriate guidelines that incorporate a cold stress index, to determine the 'best' control methods for alleviating potential cold stress.

When a risk of thermal stress is identified, the following exposure controls must be implemented:

- An acclimatisation period for new workers and those returning from extended leave or sickness;
- Training in the recognition of signs and symptoms of heat or cold stress, emergency procedures and preventative measures;
- Protective observation (buddy system or supervision); and
- A requirement for self-paced working.

The following exposure controls must be considered by a competent person:

- Work / rest regimes and job rotation based on measurements conducted;
- Suitable rest areas with a provision of cool drinking water and cool conditions for high temperatures, or provision of warm drinks and warm conditions for cold temperatures;
- Selection of appropriate clothing or other PPE for extreme temperature conditions;
- The use of engineering controls; and
- Undertake hot / cold tasks during a cooler / warmer time of the day.

Where thermal stress is assessed to be a risk, the operation must develop a suitable emergency response plan.

16.37 Fitness for Work and Fatigue Management

The contractor must develop and implement a programme to manage employee fitness for work. All employees working on site for whom the contractor is responsible (i.e. direct employees of the contractor as well as the employees of any appointed sub-contractors) must be subject to this programme.

All safety critical jobs (i.e. roles where fatigue or other causes of reduced fitness for work could lead to serious injury, illness or death to employees, significant equipment / plant damage, or significant environmental impact) must be identified and the risks associated with reduced fitness for work in these roles must be assessed.

A programme to manage these risks must be implemented, and it must include:

- Mechanisms for managing fatigue, stress and lack of fitness;
- An alcohol and other (including prescription, pharmaceutical or illicit) drugs policy that includes testing;

©Transnet SOC Ltd

- An Employee Assistance Programme providing confidential access to resources and counsellors; and
- Training and awareness programmes.

Each employee has an obligation to present himself fit for work at the start of the day / shift, and to remain fit for work throughout the work period. Reporting for work under the influence of alcohol or any other intoxicating substance will not be tolerated. Any transgression concerning the alcohol and other drugs policy applicable to the project may result in the offending employee's access to the project premises being temporarily or permanently withdrawn.

Alcohol and drug testing on the project premises will be carried out randomly (as employees report for duty and during the course of the day / shift), following significant incidents (all persons involved), and whenever there is reasonable suspicion. Alcohol and drug testing may also be carried out as part of a Pre-Employment Medical Examination.

The Contractor must ensure that it complies to the requirements of RSR 00-4-1.2016 Edition 1, Part 4-1 Human Factors Management-Fatigue Management standard, Transnet Fatigue Risk Management Plan (FRMP) and Fatigue Risk Management System (FRMS).

The Contractor shall document, implement and maintain processes and procedures to identify, assess and mitigate the risks associated with fatigue's contributory factors.

The Contractor shall collect data and report on their management of fatigue as outlined in Clause 8.3 of Part 4-1 Human Factors Management-Fatigue Management standard.

Sleep deprivation during shift work or from excessive working hours is a known cause of fatigue. Fatigued employees are at increased risk of accidents. Shift system design must consider:

- The effect on worker fatigue;
- The effects of activities carried out during scheduled and overtime hours;
- The impact on sleep cycles of activities such as commuting to and from site; and
- The monitoring and control of working hours.

The contractor is responsible for the administration of the working hours of his employees and of any appointed sub-contractors. The maximum working hours per day and the minimum rest times between shifts must be specified in the contractor's SHE Management Plan and must comply with all applicable legislation.

All employees engaged in safety critical jobs must undergo fitness assessments (medical examinations) which must be carried out prior to the commencement of employment on the contract, prior to a change in role, periodically based on an employee's individual risk profile, and on termination of employment on the contract:

Note: The results of an Exit Medical Examination from previous employment will not be accepted as a Pre-Employment Medical Examination.

©Transnet SOC Ltd

Note: The medical examinations described above may only be carried out by an occupational health practitioner.

A detailed job (role) description and an exposure profile (noise, dust, heat, fumes, vapours, etc.) must be provided for each employee or group of employees. The medical examinations that an employee undergoes must be based on (i.e. the employee's fitness must be assessed against) the information contained in these documents as well as the baseline risk assessment for the work. This information must be made available to the occupational health practitioner performing the medical examination.

For each role, the medical criteria for fitness must be documented and these must be based on an evaluation of the physical and medical requirements for the role.

Depending on the circumstances, certain vaccinations may need to be provided to employees.

The medical examinations carried out for all drivers and operators must include testing / assessment for medical conditions that could affect the safe operation of vehicles or equipment.

Specific testing / questioning must be carried out to determine if an individual:

- Suffers from epilepsy or any other medical condition deemed to be a risk by the occupational health practitioner;
- Makes use of chronic medication that could affect performance;
- Is colour-blind; or
- Has poor day or night vision.

The medical examinations carried out for employees that are required to work at height must include testing / questioning to determine if an individual suffers from epilepsy, hypertension (high blood pressure) or any other medical condition deemed to be a risk (with regard to working at height) by the occupational health practitioner.
Electricians must be tested for colour-blindness.

With regard to the placement of new employees:

- Prospective employees must be referred to a suitable occupational medical practitioner (doctor) for a "Pre-Employment Medical Examination";
- If an individual is found to be medically "unfit for placement", the doctor will indicate which work activities cannot be performed by the person;
- The individual may still be employed on the project if his medical restrictions can be accommodated and provided that no legislation is transgressed.

A process must be established to manage medical restrictions that may be placed on an employee. For every employee with a medical restriction, regular follow up visits with the occupational health practitioner must be arranged to ensure that each case is proactively managed.

An employee in a safety critical job must report (to his supervisor) any condition that might impair his ability to safely perform the duties associated with his role. A mechanism

©Transnet SOC Ltd

must be in place for such reports to be referred to an occupational health practitioner to determine if the employee is fit to continue with his work.

Proof of all medical examinations (i.e. certificates of fitness signed by an occupational health practitioner) must be kept on site and these records must be readily available for inspection by the Transnet Contract Manager. An employee's certificates of fitness must be included in his Personal Profile (dossier). If an Employee Personal Profile (dossier) hasn't already been compiled for a particular employee, then this must be done without delay following the employee's Pre-Employment Medical Examination. No employee in a safety critical role may commence work on site without proof that he has undergone a Pre-Employment Medical Examination.

Occupational medical examinations and data interpretation may only be carried out by medical practitioners that are appropriately qualified and certified to do so. Occupational medical data contained in reports to management must be grouped and summarised to ensure that the confidentiality rights of each individual employee are maintained. All occupational medical data and records must be retained for at least 40 years.

16.38 Legionnaires Disease

All equipment with the potential for generating Legionella (such as cooling towers and associated equipment, air-handling systems, hot water services and showers) must be identified and the risks of contamination and aerosol generation assessed.

Where there is an assessed risk that Legionella could grow in the system and cause harm, a programme must be in place such that:

- All such equipment is identified on a register. The register must contain details of the regular maintenance, cleaning and checking programmes;
- Control measures are in place to minimise aerosol emissions;
- There must be a documented water treatment programme, including procedures for inspection, assessment and maintenance of the controls; and
- New or retrofitted equipment is designed and constructed to minimise the risk of Legionella growth.

Where available, the Legionella plate count test should be used if more effective methods are not available.

Good maintenance procedures must be followed to minimise the risk of significant contamination of equipment with other bacteria and microbial organisms.

Adequate procedures must be available for disinfecting systems if significant concentrations of Legionella bacteria are present. Once disinfected, systems must be retested to confirm effectiveness of treatment.

16.39 HIV / AIDS

The contractor must assess the risks posed by HIV. Appropriate mitigation strategies must be implemented as required.

Discrimination towards employees on the basis of actual or perceived HIV status is forbidden.

©Transnet SOC Ltd

All information on the HIV status and condition of employees and community members, including that relating to counselling, care and treatment and receipt of benefits, must be maintained in medical confidence.

HIV / AIDS screening may not be a requirement for recruitment or a condition of employment.

17. Structure

The contractor must ensure that,

- all reasonably practicable steps are taken to prevent the uncontrolled collapse of any new or existing structure or any part thereof, which may become unstable or is in a temporary state of weakness or instability due to the carrying out of construction work;
- No structure or part of a structure is loaded in a manner which would render it unsafe; and
- all drawings pertaining to the design of the relevant structure are kept on site and are available on request to an inspector, other contractors, the client and the client's agent or employee.

18. Emergency Preparedness and Response

The contractor must develop, implement, test and maintain an Emergency Response Plan (incorporating emergency evacuation procedures) that focuses specifically on the contractor's team and work activities. The plan must be risk-based and must detail the procedures that must be followed when responding to all potential emergency scenarios such as a medical emergency (including first aid response), a fire, an explosion, a hazardous substance spill, flooding, rescue from height, rescue from a confined space, etc.

The contractor's Emergency Response Plan must be aligned with the Emergency Response Plan developed by Transnet.
Potential off-site emergency scenarios must be included (e.g. emergency scenarios related to the transport of personnel, the transport of hazardous materials, and personnel performing work in remote locations).

Consideration must be given to neighbours, and to the availability and capability of local emergency services. Details of any arrangements with external emergency response service providers must be included.

The Emergency Response Plan must satisfy and comply with all applicable legal requirements. The plan must be adequately resourced to ensure effective implementation. These resources must include appropriate personnel, external emergency response service providers, emergency response equipment, and warning devices. All equipment and warning devices must be identified, maintained and tested to ensure availability at all times.

Accountability for the Emergency Response Plan must be clearly defined. An Emergency Response Team (ERT) responsible for the implementation, management and execution of

©Transnet SOC Ltd

the Emergency Response Plan must be established. The roles and responsibilities of each team member must be clearly defined in the plan. Each team member must receive appropriate training to ensure that each role is performed competently.

The process for managing incident communication, notification, and reporting must be incorporated into the Emergency Response Plan. The responsible person(s) must be clearly identified, and the protocols for communicating with internal and external stakeholders must be defined.

Emergency evacuation procedures must be developed and included in the Emergency Response Plan. A copy of the plan must be provided to the Transnet Contract Manager for approval prior to site establishment.

The Emergency Response Plan must be formally reviewed (and amended if necessary) on at least an annual basis, and following any emergency situation, to ensure that it remains appropriate and effective.

At each work site:

- A suitable evacuation alarm (siren) must be provided. If work is to be carried out in proximity to an existing operational plant, the alarm provided by the contractor must be distinctly different (in terms of the sound that it generates) to any alarm installed in the operational plant. All persons working in an area where an evacuation alarm is sounded must respond to it immediately.
- Suitable fire-fighting equipment must be provided and maintained, and personnel must be trained in fire-fighting procedures and the use of fire-fighting equipment.
- Suitable first aid equipment and supplies must be provided and maintained, and an adequate number of appropriately trained First Aiders must be in place (refer to Section 14.2).
- Emergency assembly points positioned in safe locations away from buildings, plant and equipment must be designated (and conspicuously signposted). In the event of an evacuation, all persons (i.e. personnel and visitors) must assemble and be accounted for at these emergency assembly points.
- All personnel must receive awareness training on the applicable emergency response procedures, and all visitors entering the site must be properly instructed in these procedures.
- The emergency response procedures must be displayed on each notice board.
- A diagram (site plan) indicating evacuation routes, emergency assembly point locations, and the positioning of emergency equipment (fire extinguishers, first aid boxes, etc.) must be prominently displayed in all buildings and plants, in all offices, on all notice boards, and in other locations on the site as may be required.
- An up-to-date list of emergency telephone numbers must be compiled and maintained. A copy of this list must be posted at each site entrance, in each office, near each telephone, and on every notice board.
- Emergency response drills must be conducted to test the effectiveness of the emergency procedures and equipment, as well as the knowledge and proficiency of the response personnel. Where appropriate, drills must include liaison with and the involvement of external emergency response service providers. A variety of emergency scenarios must be tested including, but not limited to, medical

©Transnet SOC Ltd

emergencies, fires, rescues, and hazardous substance spills. A drill must be carried out one month after site establishment and six-monthly thereafter.

Each drill must be monitored and the outcomes (highlights and shortcomings) must be documented. Corrective actions must be identified and implemented to address the shortcomings, and the Emergency Response Plan and associated procedures must be amended as required.

18.1 First Aid Kits

A suitable first aid kit (i.e. appropriate to the level of training) must be readily available to each First Aider. All kits must be provided and maintained by the contractor.

Taking into account the type of injuries that are likely to occur in the workplace, each first aid kit must contain suitable equipment and supplies. First aid equipment and supplies required by applicable legislation must be provided as a minimum. Additional items / supplies may need to be provided depending on the nature of the workplace (specific hazards) and the level of training of the first aider in position of the kit.

The contents of each first aid kit must be kept clean and dry. Access to first aid equipment / supplies must be limited to train First Aiders only. Access to portable kit bags must be controlled and steel first aid boxes in the workplace must be kept locked.

Approved signage must be in place to indicate the locations of the first aid boxes / bags.

A record of each treatment administered must be kept in a suitable register.

19. Management of Change

To ensure that proposed changes do not give rise to unacceptable health or safety risk, the contractor must develop and implement a process for identifying and managing change in the workplace (e.g. changes to scope, schedule, procedures, work methods, site conditions, designs, plans, plant and equipment, materials, processes, etc.) that may impact on health or safety performance.

The management of change process must take into consideration that changes may be planned or unplanned, sudden or gradual, temporary or permanent.

The process must aim to ensure that:

- Changes are identified and assessed before they are implemented;
- Careful consideration is given to managing the risks associated with any change;
- Due diligence can be shown to have taken place;
- The number of unsatisfactory or unnecessary changes is minimised;
- The right people are involved in the change process; and
- All statutory requirements are met.

All risks associated with a proposed change must be evaluated and ranked. The risks that are ranked as moderate or higher must be managed to prevent serious injury or illness.

©Transnet SOC Ltd

It must not simply be assumed that a change will not result in significant risks. All proposed changes must be formally evaluated. The evaluation or review must include:

- An appropriate level of technical expertise;
- The involvement of the workforce potentially affected by the proposed change; and
- Approval of the change by a person with at least the same level of authority as those who control the existing process or item being changed.

20. Sub-contractor Alignment / Stakeholder management

Processes must be in place to ensure that the health and safety risks associated with the procurement of materials, equipment, services and labour are identified, evaluated and effectively managed.

A process for evaluating a sub-contractor's (or supplier's) ability to provide materials, equipment, services and labour that meet defined specifications must be in place. A prospective sub-contractor's health and safety management expertise, experience and capability (including previous health and safety performance) must be formally assessed prior to any contract or purchase order being awarded.

Each appointed sub-contractor must develop and implement a detailed SHE Management Plan based on the requirements of the contractor's SHE Management Plan and the Health and Safety Specification for the contract. This plan must be reviewed and approved by the contractor prior to the commencement of any work.

The properties of all materials provided to the project must be adequately understood, documented and integrated into operating procedures where exposure to these materials presents a significant health or safety risk.

Procedures, commensurate with the evaluated risk, must be in place for the receiving, storing, dispatching and transporting of all equipment and materials.

Before work commences on any contract, all sub-contractor personnel must receive comprehensive orientation and induction training

All work carried out by a sub-contractor must be managed (activity supervised) throughout the contract period and performance must be reviewed (audited) on a monthly basis

21. Section 37(2) Mandatary Agreement

Transnet and the Contractor shall enter into an agreement in terms of section 37(2) of the Occupational Health and Safety Act to the arrangements and procedures between them to ensure compliance by the contractor with the provisions of the OHS Act.

The agreement shall be completed and signed by the contractor mandated representative as soon as possible and returned to the relevant Transnet Contract Manager for his/her signature on behalf of Transnet.

The contractor shall enter into a Section 37(2) Agreement with their respective sub-contractors. Signed copy of such agreement must be kept on the contractor's compliance file.

©Transnet SOC Ltd

22. Incident Reporting and Investigation

All incidents referred to in Regulation 9 of General Administration Regulations of the OHS Act and in terms of National Railway Safety Act 6 of 2002 (and applicable SANS Codes) involving the contractor and his subcontractor on TFR premises, shall be reported to the TFR Contract Manager and Department of Labour as prescribed by the OHS Act

The contractor must establish a procedure for the management of all health and safety incidents. This procedure must define the responsibilities, methodologies and processes that must be followed for:

- Reporting an incident;
- Investigating an incident;
- Analysing an incident to determine the root cause;
- Identifying and implementing corrective actions to prevent a recurrence; and
- Communicating information concerning an incident to relevant persons and / or groups.

An incident may have multiple impacts. For each impact, the Actual Consequence and the Maximum Reasonable Outcome must be evaluated. Each impact must be evaluated independently, with the most significant classification forming the primary rating of the incident.

A Near Hit is an incident. All Near Hits must be reported.

An incident must be reported on the same work day or shift on which it occurs and preliminary details must be recorded. Depending on the Actual Consequence and Maximum Reasonable Potential Outcome of the impact(s), the relevant internal and external parties must be notified in accordance with specified protocols and timeframes, and legislative requirements.

In the event of a significant incident (i.e. an incident with an Actual Consequence of Moderate, Major or Catastrophic, or a Maximum Reasonable Potential Outcome of High or Extreme, work must cease and must only resume once the necessary actions (including the re-evaluation of any relevant risk assessments) have been taken to eliminate or reduce the risk of recurrence.

Work must only be permitted to recommence once formal authorisation has been granted by the Transnet Contract Manager. In the case of incidents with an Actual Consequence of Major or Catastrophic, work must not be permitted to recommence until authorisation has been granted by the relevant government authorities (i.e. the South African Police, the Department of Labour or the Department of Mineral Resources).

The Construction Manager must ensure that an investigation is completed within 7 calendar days for each incident that occurs, and that appropriately senior personnel participate in, and authorise the outcomes of, each investigation. Incident investigations must be facilitated by competent and experienced persons who have been trained in the appropriate methodology.

©Transnet SOC Ltd

Each incident (including Near Hits) must be investigated to a level of detail that is appropriate for the Maximum Reasonable Potential Outcome of the incident. Each incident must be analysed to determine the root cause, and corrective actions must be identified and prioritised for implementation to eliminate or reduce the risk(s) in order to prevent recurrence of the incident.

For each corrective action, a responsible person must be designated and an appropriate timeframe (target date) for completion of the corrective action must be specified. Progress on implementing corrective actions (i.e. closing incidents) must be monitored and reported on. The implementation of corrective actions must be verified during monthly audits by the Health and Safety Officers but also no later than 30 calendar days after the conclusion of the incident investigation.

The contractor must document the results of each investigation and a report must be submitted to the Transnet Contract Manager within five working days of the incident occurring.

As a minimum, each incident report must include:
- The date, time and location of the incident;
- A detailed description of the incident, including photographs;
- The names of any injured persons;
- Injury details (if applicable);
- A summary of the first aid and / or medical treatment provided (if applicable);
- The current status of any injured persons;
- The root causes of the incident; and
- Detailed corrective actions, including responsible persons and target dates for implementation.

Each significant incident must be summarised for its lessons learnt following the investigation. This information must be reviewed by the contractor's Construction Manager to assure completeness, accuracy and relevance before it is shared with (communicated to) all project personnel.

23. Non-conformance and Action Management

The contractor must establish a process for identifying and recording corrective actions arising from:
- Incident investigations;
- Hazard identification and risk assessment;
- Measurement and monitoring;
- Improvement plans and suggestions;
- Managing change;
- Audits and inspections; and
- Safety observations and coaching (safety interactions).

The contractor must establish a procedure for managing actions that addresses:
- Identification, categorisation and prioritisation of actions;
- Formal evaluation and approval of actions (management of change process);
- Assignment of responsibilities, resources and schedules for implementation;

©Transnet SOC Ltd

- Implementation of actions;
- Tracking and reporting on implementation status; and
- Monitoring and verifying the effectiveness of the actions.

24. Performance Assessment and Auditing

The contractor must establish and maintain programmes for measuring and monitoring HEALTH AND SAFETY performance on a regular basis. Metrics must include leading and lagging indicators, and be based on qualitative and quantitative data.

24.1 Reporting on Performance

Reports summarising the contractor's health and safety performance on the contract must be compiled and reported to the Transnet Contract Manager on a monthly basis.

The contractor must be prepared to discuss the content of these reports at scheduled health and safety meetings.

The reports must contain the following information:

- Number of contractor and sub-contractor employees on site;
- Total hours worked on site by contractor and sub-contractor employees (by company);
- Number of incidents by category (i.e. Near Hit, FAI, MTI and LTI);
- Lost Time Injury Frequency Rate (LTIFR) (project to date and 12-month rolling);
- Details of all new incidents for the reporting period and the corrective actions taken or to be taken;
- Feedback (progress updates) on all open incidents and outstanding corrective actions;
- Status and feedback on any employee that may have been injured and has not yet returned to work;
- Details of all health and safety training carried out during the reporting period;
- Number of SOC's (Safety Observations and Coaching) carried out during the reporting period;
- SOC trends identified and proposed action for the coming week or month to maintain positive trends and / or address negative trends;
- Details of all audits, inspections and site visits carried out during the reporting period, and the corrective actions taken (or to be taken) to address all non-conformances;
- Feedback (progress updates) on all open non-conformances and outstanding corrective actions;
- Number of Toolbox Talks conducted during the reporting period (monthly);
- Number of Planned Task Observations (PTO's) carried out during the reporting period (monthly);
- Details of all active risk assessments and Safe Work Procedures highlighting those that are due for review in the coming month (monthly);
- A look ahead (to the coming week, month or quarter) to ensure that appropriate health and safety planning and preparation is done for upcoming work;
- Challenges faced with regard to health and safety; and
- Any other health and safety related information specific to the project that may be required.

©Transnet SOC Ltd

Leading indicators (e.g. audit findings, observations, etc.) must be analysed, and any negative trends identified with regard to unsafe behaviour or conditions must be appropriately addressed to prevent incidents.

Lagging indicators (e.g. injuries, illnesses, near hits, etc.) must be investigated in detail to determine the root causes. Corrective actions must be identified, implemented and integrated into Safe Work Procedures to prevent recurrences.

24.2 Audits and Inspections

On a monthly basis, the health and safety management system and workplace activities of the contractor will be audited by the Transnet Contract Manager, any person delegated by him or Transnet Health and Safety Specialist to assess compliance with the project health and safety requirements. Any deviation from these requirements (i.e. non-conformance) that places the health or safety of any person in immediate danger will result in the specific activity being stopped until the non-conformance is corrected.

For each non-conformance determined during any audit, the contractor must identify and implement appropriate corrective actions.

For each corrective action, a responsible person must be designated and an appropriate timeframe (target date) for completion of the corrective action must be specified. Progress on implementing corrective actions (i.e. closing non-conformances) must be monitored and reported on. The implementation of corrective actions will be verified during the monthly audits.

Should it be determined that the contractor's level of compliance is unsatisfactory, all work being performed by the contractor on the project site may be stopped (at the contractor's expense) until an investigation into the reasons for the poor performance has been carried out, a corrective action plan has been developed, and corrective actions have been implemented.

In addition to the audit carried out by the Transnet Contract Manager or Health and Safety Specialist, the contractor must carry out an internal audit on a monthly basis to assess compliance with the project health and safety requirements (including the requirements of this specification and the contractor's Health and Safety Management Plan). Furthermore, the contractor must ensure that each appointed sub-contractor is audited and measured to the same standard. Copies of these audit reports must be submitted to the Transnet Contract Manager on a monthly basis.
The contractor must carry out internal health and safety inspections as follows:

- General site health and safety inspections on a daily basis; and
- Inspections of plant, tools and equipment prior to establishment or use on site, and at least monthly thereafter.

All audits and inspections must be carried out by competent persons who have been appointed in writing.

A schedule of planned audits and inspections must be compiled and maintained ensuring that:

- All work areas and all activities are covered at regular intervals;

©Transnet SOC Ltd

- All applicable legal requirements are complied with; and
- Areas or activities with significant associated hazards or risks receive greater attention.

25. Confidentiality

25.1 The Contractor must, at all times, consider all data or information given to him or that is required in connection with the work of the Company, as confidential and not makes unauthorized use of it.

25.2 He/she must ensure that such data or information is not given to any non-employee of the contractor without written consent of the TFR Contract Manager.

25.3 The Contractor shall be aware of the confidentiality of the mentioned information and is compelled to treat it accordingly.

25.4 The contractor must provide adequate physical protection for any confidential documents, etc, which were obtained from Transnet in connection with the contract work as well as any copies made thereof. If any documents or sketches are lost, the TFR Contract Manager must be notified immediately

©Transnet SOC Ltd

ANNEXURE K: Assessment Schedule - Health and Safety Requirements

Submit the following documents as a minimum with your tender:

1. The Tenderers must provide their own project specific health and safety Plan.
2. Health and safety cost breakdown (Bill of Quantities)
3. Safety, Policy signed by the Chief Executive Officer, must include or cover the following five elements –
    - Commitment to Safety, prevention of pollution,
    - Continual improvement,
    - Compliance to legal requirements, appropriate to the nature of contractor's activities,
    - Hold management accountable for development of the safety systems
    - Include objectives and targets.
4. Table or outline the Roles & Responsibilities, such as S16.2 CEO, CR8.1 Construction manager, CR8.2 Assistant Construction manager, CR8.5 Safety officer, CR8.7 Construction Supervisor, CR8.8 Construction assistant supervisor, CR9.1 Risk Assessor, 17.1 SHE Reps, etc. as per the Occupational health and safety Act 85 of 1993
5. List of job categories for project and competencies required per category and develop a training Matrix for all employees who will be working on the project. This matrix must include Management and highlight training planned dates.
6. Overview of the project specific Baseline Risk Assessment (RA), indicating major activities of the project
7. **Three years** synopsis of SHE incidents, description, type and action taken to prevent re-occurrence.
8. Complete and return with tender documentation the Contractor Safety Questionnaire included as an Annexure B.

Attached submissions to this schedule:

.....

.....

.....

.....

.....

.....

.....

.....

The assessment of the Tenderer's Health and Safety Requirements will be as follows:

Assessment						
Qualitative Assessment	**SHE Plan, Letter of Good standing & Safety, Health & Environmental Policy**	**Roles & Responsibilities as stipulated from above**	**List of Job Categories for project as stipulated from above**	**Overview of the project specific Baseline Risk Assessment (RA), indicating major activities of the project namely:**	**Three years synopsis of SHE incidents, descriptions, type and action taken**	**Complete and return the *Contractor* Safety Questionnaire attached hereto**
No response	The Tenderer has submitted no information or inadequate information to determine a score.					
(Poor response)	SHE Plan is not project specific and information supplied is totally insignificant to archieve the required standard of service. The Health and safety bill of quantities supplied is totally insignificant to achieve the required standard of service. 1 of the 5 key policy components are	Roles and responsibilities do not meet the Occupational health and safety Act as per construction regulations and TFR health and safety specification.	Key responsible persons are not included on training matrix as per proposed organogram structure.	Information supplied is totally insignificant/inadequate to achieve the required standard of service.	Information supplied is totally insignificant/inadequate to achieve the required standard of service.	Information supplied is totally insignificant/inadequate to achieve the required standard of service.

	recognized and meet the *Employer's* requirement.					
(Good response)	SHE plan is project specific, but the information lacks convincing evidence, that stated *Employer's* requirements will be met. The information provided in the Health and safety bill of quantities is poor and lacks convincing evidence.There's a medium risk that stated *Employer's* requirments will not be met. 2 of the 5 key policy components are recognized and meet the *Employer's* requirement.	Roles and responsibilities are unlikely to ensure compliance as per the w*orks* information and not in line with OHS Act and TFR health and safety specification.	Not all key responsible persons are included in the training matrix. Trainings matrix submitted does not cover all SHE training listed on Health and Safety specification. Training matrix not signed by responsible personnel.	Poor response/answer/solution lacks convincing evidence, medium risk that stated *Employer's* requirements will not be met.	Poor response/answer/solution lacks convincing evidence, medium risk that stated *Employer's* requirements will not be met.	Poor response/answer/solution lacks convincing evidence, medium risk that stated *Employer's* requirements will not be met.
(Better response)	SHE plan is project specific. The information is satisfactory to the	Satisfactory response on roles and responsibilities	Satisfactory response on the list of job categories and	Satisfactory response/answer/solution to the particular	Satisfactory response/answer/solution to the	Satisfactory response/answer/solution to the particular aspect of

	particular aspect, and evidence given is sufficient that *Employers* requirements will be met. The information provided in the Health and safety bill of quantities is satisfactory and the evidence is convincing, that stated *Employer's* requirments will be met. 3 of the 5 key policy components are recognized and meet the *Employer's* requirements.	as per *Employer's* requirements.	trainings as per proposed project organogram structure. Training matrix covers most of the trainings listed on TFR Health and safety specification.	aspect of the requirement, evidence given that the stated *Employer's* requirements will be met.	particular aspect of the requirement, evidence given that the stated *Employer's* requirements will be met.	the requirement, evidence given that the stated *Employer's* requirements will be met.
(Best response)	SHE plan is project specific. The information is good and demonstrate real understanding & ability to meet stated *Employer's* requirements. The information provided in the Health	Roles and responsibilities are likely to ensure compliance as per Works Information, OHS Act and TGC health and safety specification.	Most of key persons listed on the training matrix as per proposed project organogram structure. Trainings specified on the matrix are in line with TFR health and safety specification.	Good response/answer/solution which demonstrates real understanding and evidence of ability to meet stated *Employer's* requirements.	Good response/answer/solution which demonstrates real understanding and evidence of ability to meet stated *Employer's* requirements.	Good response/answer/solution which demonstrates real understanding and evidence of ability to meet stated *Employer's* requirements.

	and safety bill of quantities is good and demonstrates real understanding and evidence of ability to meet stated *Employer's* requirements. 4 of the five key policy components are recognized and meets the *Employer's* requirements.					
(Excellent response)	She plan is project specific. The information is very good and gives real confidence that the tenderer, is most likely to ensure compliance with stated *Employer's* requirements. The information provided in the Health and safety bill of quantities is very good and gives real confidence that the tender is most likely to ensure compliance with	Roles and Responsibilities most likely to ensure compliance as per requirements of OHS Act and TFR Health and Safety Management Specification.	Training matrix include Management and all employees /personnel in the project. Training matrix had been signed by responsible personnel.	Very good response/answer/solution gives real confidence that the tenderer is most likely to ensure compliance with stated *Employer's* requirements.	Very good response/answer/solution gives real confidence that the tenderer is most likely to ensure compliance with stated *Employer's* requirements.	Very good response/answer/solution gives real confidence that the tenderer is most likely to ensure compliance with stated *Employer's* requirements.

	stated stated *Employer's* requirements. All 5 key policy components are recognized and meets the *Employer's* requirements.					

ANNEXURE L: Health and Safety Questionnaire

Health, Safety Questionnaire

1. SAFE WORK PERFORMANCE

1A. Injury Experience / Historical Performance - Alberta

Use the previous three years injury and illness records to complete the following:

Year			
Number of medical treatment cases			
Number of restricted work day cases			
Number of lost time injury cases			
Number of fatal injuries			
Total recordable frequency			
Lost time injury frequency			
Number of worker manhours			

1 - Medical Treatment Case	Any occupational injury or illness requiring treatment provided by a physician or treatment provided under the direction of a physician
2 – Restricted Work Day Case	Any occupational injury or illness that prevents a worker from performing any of his/her craft jurisdiction duties
3 – Lost Time injury Cases	Any occupational injury that prevents the worker from performing any work for at least one day
4 – Total Recordable Frequency	Total number of Medical Treatment, Restricted Work and Lost Time Injury cases multiplied by 200,000 then divided by total manhours
5- Lost Time Injury Frequency	Total number of Lost Time Injury cases multiplied by 200,000 then divide by total manhours

1B. Workers' Compensation Experience

Use the previous three years injury and illness records to complete the following (if applicable):

Industry Code:	Industry Classification:

Year			
Industry Rate			
Contractor Rate			
% Discount or Surcharge			

Is your Workers' Compensation account in good standing? ☐ Yes ☐ No
(Please provide letter of confirmation)

2. CITATIONS

2A. Has your company been cited, charged or prosecuted under Health, Safety and/or Environmental Legislation in the last 5 years?
☐ Yes ☐ No
If yes, provide details:

2B. Has your company been cited, charged or prosecuted under the above Legislation in another Country, Region or State?
☐ Yes ☐ No
If yes, provide details:

3. CERTIFICATE OF RECOGNITION

Does your company have a Certificate of Recognition?
☐ Yes ☐ No If Yes, what is the Certificate No. _____ Issue Date _____

4. SAFETY PROGRAM

Do you have a written safety program manual? ☐ Yes ☐ No
If Yes, provide a copy for review

Do you have a pocket safety booklet for field distribution? ☐ Yes ☐ No
If Yes, provide a copy for review

Does your safety program contain the following elements:

	YES	NO		YES	NO
CORPORATE SAFETY POLICY	☐	☐	EQUIPMENT MAINTENANCE	☐	☐
INCIDENT NOTIFICATION POLICY	☐	☐	EMERGENCY RESPONSE	☐	☐
RECORDKEEPING & STATISTICS	☐	☐	HAZARD ASSESSMENT	☐	☐
REFERENCE TO LEGISLATION	☐	☐	SAFE WORK PRACTICES	☐	☐
GENERAL RULES & REGULATIONS	☐	☐	SAFE WORK PROCEDURES	☐	☐
PROGRESSIVE DISCIPLINE POLICY	☐	☐	WORKPLACE INSPECTIONS	☐	☐
RESPONSIBILITIES	☐	☐	INVESTIGATION PROCESS	☐	☐
PPE STANDARDS	☐	☐	TRAINING POLICY & PROGRAM	☐	☐
ENVIRONMENTAL STANDARDS	☐	☐	COMMUNICATION PROCESSES	☐	☐
MODIFIED WORK PROGRAM	☐	☐			

5. TRAINING PROGRAM

5A. Do you have an orientation program for new hire employees? ☐ Yes ☐ No
If Yes, include a course outline. Does it include any of the following:

	YES	NO		YES	NO
GENERAL RULES & REGULATIONS	☐	☐	CONFINED SPACE ENTRY	☐	☐
EMERGENCY REPORTING	☐	☐	TRENCHING & EXCAVATION	☐	☐
INJURY REPORTING	☐	☐	SIGNS & BARRICADES	☐	☐
LEGISLATION	☐	☐	DANGEROUS HOLES & OPENINGS	☐	☐
RIGHT TO REFUSE WORK	☐	☐	RIGGING & CRANES	☐	☐
PERSONAL PROTECTIVE EQUIPMENT	☐	☐	MOBILE VEHICLES	☐	☐
EMERGENCY PROCEDURES	☐	☐	PREVENTATIVE MAINTENANCE	☐	☐
PROJECT SAFETY COMMITTEE	☐	☐	HAND & POWER TOOLS	☐	☐
HOUSEKEEPING	☐	☐	FIRE PREVENTION & PROTECTION	☐	☐
LADDERS & SCAFFOLDS	☐	☐	ELECTRICAL SAFETY	☐	☐
FALL ARREST STANDARDS	☐	☐	COMPRESSED GAS CYLINDERS	☐	☐
AERIAL WORK PLATFORMS	☐	☐	WEATHER EXTREMES	☐	☐

5B. Do you have a program for training newly hired or promoted supervisors? ☐ Yes ☐ No

(If Yes, submit an outline for evaluation. Does it include instruction on the following:

	Yes	No		Yes	No
EMPLOYER RESPONSIBILITIES	☐	☐	SAFETY COMMUNICATION	☐	☐
EMPLOYEE RESPONSIBILITIES	☐	☐	FIRST AID/MEDICAL PROCEDURES	☐	☐
DUE DILIGENCE	☐	☐	NEW WORKER TRAINING	☐	☐
SAFETY LEADERSHIP	☐	☐	ENVIRONMENTAL REQUIREMENTS	☐	☐
WORK REFUSALS	☐	☐	HAZARD ASSESSMENT	☐	☐
INSPECTION PROCESSES	☐	☐	PRE-JOB SAFETY INSTRUCTION	☐	☐
EMERGENCY PROCEDURES	☐	☐	DRUG & ALCOHOL POLICY	☐	☐
INCIDENT INVESTIGATION	☐	☐	PROGRESSIVE DISCIPLINARY POLICY	☐	☐
SAFE WORK PROCEDURES	☐	☐	SAFE WORK PRACTICES	☐	☐
SAFETY MEETINGS	☐	☐	NOTIFICATION REQUIREMENTS	☐	☐

6. SAFETY ACTIVITIES

Do you conduct safety inspections? Yes ☐ No ☐ Weekly ☐ Monthly ☐ Quarterly ☐

Describe your safety inspection process (include participation, documentation requirements, follow-up, report distribution).

Who follows up on inspection action items?

Do you hold site safety meetings for field employees? If Yes, how often?

Yes ☐ No ☐ Daily ☐ Weekly ☐ Biweekly ☐

Do you hold site meetings where safety is addressed with management and field supervisors?

Yes ☐ No ☐ Weekly ☐ Biweekly ☐ Monthly ☐

Is pre-job safety instruction provided before to each new task? ☐ Yes ☐ No

Is the process documented? ☐ Yes ☐ No

Who leads the discussion?

Do you have a hazard assessment process? ☐ Yes ☐ No

- Are hazard assessments documented? If yes, how are hazard assessments communicated and implemented on each project? Who is responsible for leading the hazard assessment process?

Does your company have policies and procedures for environmental protection, spill clean-up, reporting, waste disposal, and recycling as part of the Health & Safety Program?

☐ Yes ☐ No

How does your company measure its H&S success?

- Attach separate sheet to explain

7. SAFETY STEWARDSHIP

7A Are incident reports and report summaries sent to the following and how often?

	Yes	No	Monthly	Quarterly	Annually
Project/Site Manager	☐	☐	☐	☐	☐
Managing Director	☐	☐	☐	☐	☐
Safety Director/Manager	☐	☐	☐	☐	☐
/Chief Executive Officer	☐	☐	☐	☐	☐

7B How are incident records and summaries kept? How often are they reported internally?

	Yes	No	Monthly	Quarterly	Annually
Incidents totaled for the entire company	☐	☐	☐	☐	☐
Incidents totaled by project	☐	☐	☐	☐	☐
• Subtotaled by superintendent	☐	☐	☐	☐	☐
• Subtotaled by foreman	☐	☐	☐	☐	☐

7C How are the costs of individual incidents kept? How often are they reported internally?

	Yes	No	Monthly	Quarterly	Annually
Costs totaled for the entire company	☐	☐	☐	☐	☐
Costs totaled by project	☐	☐	☐	☐	☐
• Subtotaled by superintendent	☐	☐	☐	☐	☐
• Subtotaled by foreman/general foreman	☐	☐	☐	☐	☐

7D Does your company track non-injury incidents?

	Yes	No	Monthly	Quarterly	Annually
Near Miss	☐	☐	☐	☐	☐
Property Damage	☐	☐	☐	☐	☐
Fire	☐	☐	☐	☐	☐
Security	☐	☐	☐	☐	☐
Environmental	☐	☐	☐	☐	☐

8 PERSONNEL

List key health and safety officers planned for this project. Attach resume.

Name	Position/Title	Designation

Supply name, address and phone number of your company's corporate health and safety representative. Does this individual have responsibilities other than health, safety and environment?

Name	Address	Telephone Number

Other responsibilities:

9 REFERENCES

List the last three company's your form has worked for that could verify the quality and management commitment to your occupational Health & Safety program

Name and Company	Address	Phone Number

ANNEXURE M: Health and Safety Cost Breakdown

NB: This Safety Cost breakdown is required to illustrate to Transnet that safety costs have been factored into your tender price and will not be paid for as a separate expense.

Tenderer (Company)	**Responsible Person**	**Designation**	**Date**
Project/Tender Title	**Project/Tender No.**	**Project Location / Description**	

#	Cost element	Unit Cost (R)	# of Units	Total Cost (R)
1.	Human Resources			
2.	Systems Documentation			
3.	Meetings & Administration			
4.	H&S Training			
5.	PPE & Safety Equipment			
6.	Signage & Barricading			
7.	Workplace Facilities			
8.	Emergency & Rescue Measures			
9.	Hygiene Surveys & Monitoring			
10.	Medical Surveillance			
11.	Safe Transport of Workers			
12.	HazMat Management (e.g. asbestos /silica)			
13.	Substance Abuse Testing (3 kits @R500 pm)			
14.	H&S Reward & Recognition			
15.	Other			

Total Health and Safety Estimate (R)	
Total Estimate Value (R)	
H&S Cost as % of Tender value	

Mandatary Agreement

OCCUPATIONAL HEALTH AND SAFETY ACT 85 of 1993 (AS AMENDED)

AGREEMENT WITH MANDATORY
In terms of Section 37(1) & (2)

WRITTEN AGREEMENT ENTERED INTO AND BETWEEN

Transnet SOC Ltd
(Hereinafter referred to as the Employer)

AND

(Hereinafter referred to as Mandatory (Principal Contractor)

Compensation Fund Number :

Project Name :

©Transnet SOC Ltd

TABLE OF CONTENTS

1. **DEFINITIONS**
2. **INTERPRETATION**
3. **REPORTING**
4. **WARRANTY OF COMPLIANCE**
5. **APPOINTMENTS AND TRAINING**
6. **SUPERVISION, DISCIPLINE AND REPORTING**
7. **ACCESS TO THE OHS ACT**
8. **COOPERATION**
9. **WORK PROCEDURES**
10. **HEALTH AND SAFETY MEETINGS**
11. **COMPENSATION REGISTRATION**
12. **MEDICAL EXAMINATIONS**
13. **INCIDENT REPORTING AND INVESTIGATION**
14. **SUBCONTRACTORS**
15. **SECURITY AND ACCESS**
16. **FIRE PRECAUTIONS AND FACILITIES**
17. **ABLUTION FACILITIES**
18. **HYGIENE AND CLEANLINESS**
19. **NO NUISANCE**
20. **INTOXICATION NOT ALLOWED**
21. **PERSONAL PROTECTIVE EQUIPMENT**
22. **PLANT, MACHINERY AND EQUIPMENT**
23. **NO USAGE OF EMPLOYER'S EQUIPMENT**
24. **TRANSPORT**
25. **CLARIFICATION**
26. **DURATION OF AGREEMENT**
27. **NON COMPLINCE**

©Transnet SOC Ltd

28. HEADING

PREAMBLE

WHEREAS section 37(1) & (2) of the Occupational Health and Safety Act No 85 of 1993 ("the Act") requires that parties have an agreement in writing to ensure compliance by a mandatory in line with the provisions of the Act.

AND WHEREAS Transnet SOC Ltd requires the services of the Contractors to execute certain projects within its workshops.

AND WHEREAS TRANSNET SOC LTD can be better served by Contractors who have the infrastructure, specialist employees and expertise to execute such projects at the highest level of efficiency on short notice.

NOW THEREFORE the parties agree as follows;

1. DEFINITIONS

For the purpose of this agreement, unless the context indicates otherwise, the following definitions are set out for the terms indicated:

1.1 "**Act**" means the Occupational Health and Safety Act No 85 of 1993;

1.2 "**Agreement**" means this Mandatary agreement;

1.3 **"Contractor "** means the Mandatory;

1.4 **"COID Act"** means the Compensation for Occupational Injuries and Diseases Act No 130 of 1993.

1.5 "**Effective Date**" means the date of signature of this Agreement by the last party signing hereto;

1.6 "**Employer**" refers to TRANSNET SOC LTD;

1.7 "**Mandatary**" means an agent, Contractor or sub-contractor for work, but without derogating from the status in his own right as an employer or user;

1.8 "**Parties**" means TRANSNET SOC LTD and the Contractor, and "**Party**" shall mean either one of them, as the context indicates;

1.9 **"Principal Contract"** means the appointed contractor whereby such contractor has to provide goods and or services to TRANSNET SOC LTD.

1.10 "**Regulations**" means regulations promulgated in terms of the relevant legislation.

1.11 "**Section**" means the relevant section of the Occupational Health and Safety Act No 85 of 1993

1.12 "**Services**" means the services to be provided by the Contractor to TRANSNET SOC LTD.

1.13 "**TRANSNET SOC LTD**" means Transnet Group and all its operating divisions and Specialist units with (Registration No. **1990/000900/06),** a public company incorporated in accordance with the company laws of the Republic of South Africa;

2. INTERPRETATION

©Transnet SOC Ltd

2.1 Clause headings in this Agreement are included for ease of reference only and do not form part of this Agreement for the purposes of interpretation or for any other purpose. No provision shall be construed against or interpreted to the disadvantage of either Party hereto by reason of such Party having or being deemed to have structured or drafted such provision.

2.2 Any term, word or phrase used in this Agreement, other than those defined under the clause heading "Definitions" shall be given its plain English meaning, and those terms, words, acronyms, and phrases used in this Agreement will be interpreted in accordance with the generally accepted meanings accorded thereto.

2.3 A reference to the singular incorporates a reference to the plural and vice versa.

2.4 A reference to natural persons incorporates a reference to legal persons and vice versa.

2.5 A reference to a particular gender incorporates a reference to the other gender.

3. REPORTING

3.1 The Mandatary and/or his designated person appointed in terms of Section 16(2) of the Occupational Health and Safety Act 85 of 1993 ("the OHS Act") shall report to the Risk Manager and/or a Project Manager and/or a representative designated by the Employer prior to commencing the work at the premises of the Employer.

4. WARRANTY OF COMPLIANCE

4.1 In terms of this Agreement the Mandatary warrants that he agrees to any of the arrangements and procedures as prescribed by the Employer and as provided for in terms of Section 37(2) of the OHS Act for the purposes of compliance with the OHS Act.

4.2 The Mandatary further warrants that he and/or his employees undertake to maintain such compliance with the OHS Act. Without derogating from the generality of the above, nor from the provisions of the said Agreement, the Mandatary shall ensure that the clauses as hereunder described are at all times adhered to by himself and his employees.

4.3 The Mandatary hereby undertakes to ensure that the health and safety of any other person on the premises is not endangered by the conduct of his activities and that of his employees.

5. APPOINTMENTS AND TRAINING

5.1 The Mandatary shall appoint competent persons as per Section 16(2) of the OHS Act. Any such appointed person shall be trained on any occupational health and safety matter and the OHS Act provisions pertinent to the work is to be performed under his responsibility. Copies of any appointments made by the Mandatary shall immediately be provided to the Employer.

5.2 The Mandatary shall further ensure that all his employees are trained on the health and safety aspects relating to the work to be done on the premises of the Employer and that they understand the hazards associated with such work being carried out on the premises. Without derogating from the foregoing, the Mandatary shall, in particular, ensure that all his users or operators of any materials, machinery or equipment are properly trained in the use of such materials, machinery or equipment.

5.3 Notwithstanding the provisions of the above, the Mandatary shall ensure that he, his appointed responsible persons and his employees are at all times familiar with the provisions of the OHS Act, and that they comply with the provisions of the Act.

©Transnet SOC Ltd

6. SUPERVISION, DISCIPLINE AND REPORTING

6.1 The Mandatary shall ensure that all work performed on the Employer's a premise is done under strict supervision and that no unsafe or unhealthy work practices are permitted. Discipline regarding health and safety matters shall be strictly enforced against any of his employees regarding non-compliance by such employee with any health and safety matters.

6.2 The Mandatary shall further ensure that his employees report to him all unsafe or unhealthy work situations immediately after they become aware of such conditions and that he in turn immediately reports these to the Employer and/or his representative.

7. ACCESS TO THE OHS ACT

7.1 The Mandatary shall ensure that he has an updated copy of the OHS Act on site at all times and that this is accessible to his appointed responsible persons and employees, save that the parties may make arrangements for the Mandatary and his appointed responsible persons and employees to have access to the Employer's updated copy/copies of the Act.

8. COOPERATION

8.1 The Mandatary and/or his responsible persons and employees shall provide full co-operation and information if and when the Employer or his representative inquires into any occupational health and safety issues concerning the Mandatary. It is hereby recorded that the Employer and his representative shall at all times be entitled to make such inquiry.

8.2 Without derogating from the generality of the above, the Mandatary and his responsible persons shall make available to the Employer and his representative, on request, all and/or any checklists and inspection registers required to be kept by him in respect of any of his materials, machinery or equipment.

9. WORK PROCEDURES

9.1 The Mandatary shall, after having established the dangers associated with the work performed, develop and implement mitigation measures to minimize or eliminate such dangers for the purpose of ensuring a healthy and safe working environment. The Mandatary shall then ensure that his responsible persons and employees are familiar with such mitigation measures.

9.2 The Mandatary shall implement any other safe work practices as prescribed by the Employer and shall ensure that his responsible persons and employees are made conversant with such other safe work practices as prescribed by the Employer and that his responsible persons and employees adhere to such safe work practices.

9.3 The Mandatary shall ensure that work for which any permit is required by the Employer is not performed by his employees prior to the Employer obtaining such permit from the Mandatary.

10. HEALTH AND SAFETY MEETINGS

10.1 If required in terms of the OHS Act, the Mandatary shall establish his own health and safety committee(s) and ensure that his employees, being the committee members, provide health and safety representatives to attend the Employer's health and safety committee meetings.

11. COMPENSATION REGISTRATION

11.1 The Mandatary shall ensure that he has a valid proof of registration with the Compensation Commissioner, as required in terms of **COID Act**, and that all payments owing to the Commissioner are discharged. The Mandatary shall further ensure that the cover remain in force while any such employee is present on the premises.

©Transnet SOC Ltd

12. MEDICAL EXAMINATIONS

12.1 The Mandatary shall ensure that all his employees undergo routine medical examinations and that they are medically fit for the purposes of the work they are to perform.

13. INCIDENT REPORTING AND INVESTIGATION

13.1 All incidents referred to in Section 24 of the OHS Act shall be reported by the Mandatary to the Department of Labour and to the Employer. The Employer shall further be provided with copies of any written documentation relating to any incident.

13.2 The Employer retains an interest in the reporting of any incident as described above as well as in any formal investigation and/or inquiry conducted in terms of section 32 of the OHS-Act into such incident.

14. SUBCONTRACTORS

14.1 The Mandatary shall notify the Employer of any subcontractor he may wish to perform work on his behalf on the Employer's premises. It is hereby recorded that all the terms and provisions contained in this clause shall be equally binding upon the subcontractor prior to the subcontractor commencing with the work. Without derogating from the generality of this paragraph:

14.1.1 The Mandatary shall ensure that training as discussed under appointments and training, is provided prior to the subcontractor commencing work on the Employer's premises.

14.1.2 The Mandatary shall ensure that work performed by the subcontractor is done under his strict supervision, discipline and reporting.

14.1.3 The Mandatary shall inform the Employer of any health and safety hazards and/or issue that the subcontractor may have brought to his attention.

14.1.4 The Mandatary shall inform the Employer of any difficulty encountered regarding compliance by the subcontractor with any health and safety instruction, procedure and/or legal provision applicable to the work the subcontractor performs on the Employer's premises.

15. SECURITY AND ACCESS

15.1 The Mandatary and his employees shall enter and leave the premises only through the main gate(s) and/or checkpoint(s) designated by the Employer. The Mandatary shall ensure that employees observe the security rules of the Employer at all times and shall not permit any person who is not directly associated with the work from entering the premises.

15.2 The Mandatary and his employees shall not enter any area of the premises that is not directly associated with their work.

15.3 The Mandatary shall ensure that all materials, machinery or equipment brought by him onto the premises are recorded at the main gate(s) and/or checkpoint(s). Failure to do this may result in a refusal by the Employer to allow the materials, machinery or equipment to be removed from the Employer's premises.

16. FIRE PRECAUTIONS AND FACILITIES

16.1 The Mandatary shall ensure that an adequate supply of fire-protection and first-aid facilities are provided for the work to be performed on the Employer's premises, save that the Parties may mutually make arrangements for the provision of such facilities.

©Transnet SOC Ltd

16.2 The Mandatary shall further ensure that all his employees are familiar with fire precautions at the premises, which includes fire-alarm signals and emergency exits, and that such precautions are adhered to.

17. ABLUTION FACILITIES

17.1 The Mandatary shall ensure that an adequate supply of ablution facilities are provided for his employees performing work on the Employer's premises, save that the parties may mutually make arrangements for the provision of such facilities.

18. HYGIENE AND CLEANLINESS

18.1 The Mandatary shall ensure that the work site and surround area is at all times maintained to the reasonably practicable level of hygiene and cleanliness. In this regard, no loose materials shall be left lying about unnecessarily and the work site shall be cleared of waste material regularly and on completion of the work.

19. NO NUISANCE

19.1 The Mandatary shall ensure that neither he nor his employees undertake any activity that may cause environmental impairment or constitute any form of nuisance to the Employer and/or his surroundings.

19.2 The Mandatary shall ensure that no hindrance, hazard, annoyance or inconvenience is inflicted on the Employer, another Mandatary or any tenants. Where such situations are unavoidable, the Mandatary shall give prior notice to the Employer.

20. INTOXICATION NOT ALLOWED

20.1 No intoxicating substance of any form shall be allowed on site. Any person suspected of being intoxicated shall not be allowed on the site. Any person required to take medication shall notify the relevant responsible person thereof, as well as the potential side effects of the medication.

21. PERSONAL PROTECTIVE EQUIPMENT

21.1 The Mandatary shall ensure that his responsible persons and employees are provided with adequate personal protective equipment (PPE) for the work they may perform and in accordance with the requirements of General Safety Regulation 2 (1) of the OHS Act. The Mandatary shall further ensure that his responsible persons and employees wear the PPE issued to them at all material times.

22. PLANT, MACHINERY AND EQUIPMENT

22.1 The Mandatary shall ensure that all the plant, machinery, equipment and/or vehicles he may wish to utilize on the Employer's premises is/are at all times of sound order and fit for the purpose for which it/they is/are attended to, and that it/they complies/comply with the requirements of Section 10 of the OHS Act.

22.2 In accordance with the provisions of Section 10(4) of the OHS Act, the Mandatary hereby assumes the liability for taking the necessary steps to ensure that any article or substance that it erects or installs at the premises, or manufactures, sells or supplies to or for the Employer, complies with all the prescribed requirements and will be safe and without risks in terms of health and safety when properly used.

©Transnet SOC Ltd

23. NO USAGE OF THE EMPLOYER'S EQUIPMENT

23.1 The Mandatary hereby acknowledges that his employees are not permitted to use any materials, machinery or equipment of the Employer unless the prior written consent of the Employer has been obtained, in which case the Mandatary shall ensure that only those persons authorized to make use of such materials, machinery or equipment, have access thereto.

24. TRANSPORT

24.1 The Mandatary shall ensure that all road vehicles used on the premises are in a roadworthy condition and are licensed and insured. The Mandatary shall ensure that all drivers shall have relevant and valid driving licenses and the Mandatary shall ensure that no vehicle/s shall carry passengers unless it is specifically designed to do and that all drivers shall adhere to the speed limits and road signs on the premises at all times.

24.2 In the event that any hazardous substances are to be transported on the premises, the Mandatary shall ensure that the requirements of the Hazardous Substances Act 15 of 1973 are complied with fully all times.

25. CLARIFICATION

25.1 In the event that the Mandatary requires clarification of any of the terms or provisions of this Agreement, he should take the necessary steps to contact the Risk Manager of the Employer to obtain such clarification.

26. DURATION OF AGREEMENT

26.1 This Agreement shall remain in force for the duration of the work to be performed by the Mandatary and/or while any of the Mandatary's employees are present on the Employer's premises.

27. NON COMPLIANCE WITH THE AGREEMENT

27.1 If the Mandatory fails to comply with any provisions of this Agreement, the Employer shall be entitled to give the mandatory 7 (seven) days written notice to remedy such non-compliance and if the Mandatory fails to comply with such notice, then the Employer shall forthwith be entitled but not obliged, without prejudice to any other rights or remedies which the mandatory may have in law,

271.1 to suspend the main Agreement; or

27.1.2 To claim immediate performance and/or payment of such obligations.

27.2 Should mandatory continue to breach the contract on three occasions, then the Employer is authorised to suspend the main contract without complying with the condition stated in the clause above.

28. HEADINGS

The headings as contained in this Agreement are for reference purposes only and shall not be construed as having any interpretative value in them or as giving any indication as to the meaning of the contents of the paragraphs contained in this Agreement.

©Transnet SOC Ltd

Thus done and signed

at _____on the _____ day of _____ 201__

_____
For and on behalf of the Employer

Witnesses:

1. _____

2. _____

at _____on the _____ day of _____ 201__

_____
for and on behalf of the Mandatary

Witnesses:

3. _____

4. _____

©Transnet SOC Ltd

Transnet SOC Limited Registration Number 1990/00900/06

TRANSNET SPECIFICATION

E7/1 - SPECIFICATION FOR GENERAL WORK AND WORKS ON, OVER, UNDER OR ADJACENT TO RAILWAY LINES AND NEAR HIGH VOLTAGE EQUIPMENT

(This specification shall be used in network operator contracts)

Circulation Not Restricted

© This document as a whole is protected by copyright. The information herein is the sole property of Transnet SOC Ltd. It may not be used, disclosed or reproduced in part or in whole in any manner whatsoever, except with the written permission of and in a manner permitted by the proprietors.

(This page not to be issued with contract)

SPECIFICATION FOR GENERAL WORK AND WORKS ON, OVER, UNDER OR ADJACENT TO RAILWAY LINES AND NEAR HIGH VOLTAGE EQUIPMENT

Author:	Project Manager Capital Program (Electrical)	G. Maposa	
Approved:	Senior Engineer Infra Engineering (Train Authorisation Systems)	J. van den Berg	
"	Principal Engineer Infra Engineering (Track)	M. Marutla	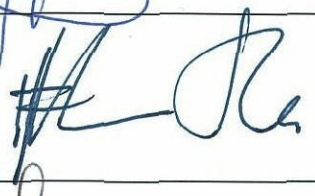
"	Principal Engineer Infra Engineering (Structures)	J. Homan	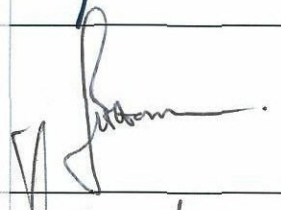
"	Principal Engineer Infra Engineering (Electrical)	J. Vosloo	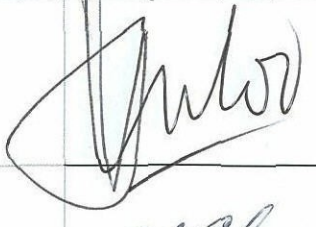
"	Principal Engineer Technology Management (Electrical)	W. Coetzee	
"	Chief Engineer Transport Telecoms	D. Botha	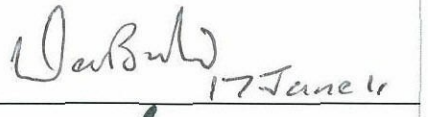
Authorised:	Chief Engineer Infrastructure Engineering	J. van Aardt	

Date: May 2011

(This page not to be issued with contract)

Transnet SOC Limited Registration Number 1990/00900/06

TRANSNET SPECIFICATION

E7/1 - SPECIFICATION FOR GENERAL WORK AND WORKS ON, OVER, UNDER OR ADJACENT TO RAILWAY LINES AND NEAR HIGH VOLTAGE EQUIPMENT

(This specification shall be used in network operator contracts)

Circulation Not Restricted

© This document as a whole is protected by copyright. The information herein is the sole property of Transnet SOC Ltd. It may not be used, disclosed or reproduced in part or in whole in any manner whatsoever, except with the written permission of and in a manner permitted by the proprietors.

CONTENTS

CLAUSE	HEADING	PAGE
1.0	SCOPE	3
2.0	DEFINITIONS	3
	PART A - GENERAL SPECIFICATION	
3.0	AUTHORITY OF OFFICERS OF TRANSNET	4
4.0	CONTRACTOR'S REPRESENTATIVES AND STAFF	4
5.0	OCCUPATIONS AND WORK PERMITS	4
6.0	SPEED RESTRICTIONS AND PROTECTION	5
7.0	ROADS ON THE NETWORK OPERATOR'S PROPERTY	5
8.0	CLEARANCES	5
9.0	STACKING OF MATERIAL	5
10.0	EXCAVATION, SHORING, DEWATERING AND DRAINAGE	5
11.0	FALSEWORK FOR STRUCTURES	6
12.0	PILING	6
13.0	UNDERGROUND SERVICES	6
14.0	BLASTING AND USE OF EXPLOSIVES	6
15.0	RAIL TROLLEYS	7
16.0	SIGNAL TRACK CIRCUITS	7
17.0	PENALTY FOR DELAYS TO TRAINS	7
18.0	SURVEY BEACONS AND PEGS	7
19.0	TEMPORARY LEVEL CROSSINGS	8
20.0	COMPLETION OF THE WORKS	8
21.0	PROTECTION OF PERSONS AND PROPERTY	9
22.0	INTERFERENCE WITH THE NETWORK OPERATOR'S ASSETS AND WORK ON OPEN LINES	10
23.0	ACCESS, RIGHTS-OF-WAY AND CAMPSITES	10
24.0	SUPERVISION	10
25.0	HOUSING OF EMPLOYEES	10
26.0	OPTICAL FIBRE CABLE ROUTES	10
	PART B - ADDITIONAL SPECIFICATION FOR WORK NEAR HIGH-VOLTAGE ELECTRICAL EQUIPMENT	
27.0	GENERAL	11
28.0	WORK ON BUILDINGS OR FIXED STRUCTURES	11
29.0	WORK DONE ON OR OUTSIDE OF ROLLING STOCK, INCLUDING LOADING AND UNLOADING	11
30.0	USE OF EQUIPMENT	12
31.0	CARRYING AND HANDLING MATERIAL AND EQUIPMENT	12
32.0	PRECAUTIONS TO BE TAKEN WHEN ERECTING OR REMOVING POLES, ANTENNAE AND TREES ETC.	12
33.0	USE OF WATER	13
34.0	USE OF CONSTRUCTION PLANT	13
35.0	WORK PERFORMED UNDER DEAD CONDITIONS UNDER COVER OF A WORK PERMIT	13
36.0	TRACTION RETURN CIRCUITS IN RAILS	13
37.0	HIGH-VOLTAGE ELECTRICAL EQUIPMENT NOT MAINTAINED AND/OR OPERATED BY THE NETWORK OPERATOR	14

1.0 SCOPE

1.1 This specification covers the network operator's requirements for general work and works on, over, under or adjacent to railway lines and near high voltage equipment.

2.0 DEFINITIONS

The following definitions shall apply:

"Authorised Person" - A person whether an employee of the network operator or not, who has been specially authorised to undertake specific duties in terms of Transnet' publication Electrical Safety Instructions, and who holds a certificate or letter of authority to that effect.

"Barrier" Any device designed to restrict access to "live" high-voltage electrical equipment.

"Bond" - A short conductor installed to provide electrical continuity.

"Contractor" - Any person or organisation appointed by the network operator to carry out work on its behalf.

"Contract Supervisor" - The person or juristic person appointed by the network operator from time to time as the Contract Supervisor, to administer the Contractor's performance and execution of the Works according to the powers and rights held by and obligations placed upon the Contract Supervisor in terms of the Contract.

"Dead" - Isolated and earthed.

"Electrical Officer (Contracts)" - The person appointed in writing by the Project Manager in terms of this specification as the person who shall be consulted by the Contractor in all electrical matters to ensure that adequate safety precautions are taken by the Contractor.

"Executive Officer" - The person appointed by the network operator from time to time as the Executive Officer to act according to the rights and powers held by and obligations placed upon him in terms of the Contract.

"High-Voltage" - A voltage normally exceeding 1000 volts.

"Live" - A conductor is said to be "live" when it is at a potential different from that of the earth or any other conductor of the system of which it forms a part.

"Near" - To be in such a position that a person's body or the tools he is using or any equipment he is handling may come within 3 metres of "live" exposed high-voltage electrical equipment.

"Occupation" - An authorisation granted by the network operator for work to be carried out under specified conditions on, over, under or adjacent to railway lines.

"Occupation Between Trains" - An occupation during an interval between successive trains.

"Optical Fibre Cable" - Buried or suspended composite cable containing optical fibres used in:

- telecommunication networks for transmission of digital information and
- safety sensitive train operations systems.

"Project Manager" – As defined in the special conditions of the contract. The person or juristic person appointed by the network operator from time to time as the Project Manager, to administer the Contract according to the powers and rights held by and obligations placed upon him in terms of the Contract.

"Responsible Representative" - The responsible person in charge, appointed by a contractor, who has undergone specific training (and holds a certificate) to supervise (general or direct) staff under his control who perform general work or to work on, over, under or adjacent to railway lines and in the vicinity of high-voltage electrical equipment.

"Total Occupation" - An occupation for a period when trains are not to traverse the section of line covered by the occupation.

"Work on" - Work undertaken on or so close to the equipment that the specified working clearances to the "live" equipment cannot be maintained.

"Work Permit" - A combined written application and authority to proceed with work on or near dead electrical equipment.

"Works" – The contractual intent for the work to be done as defined in the contract at a defined work site.

PART A - GENERAL SPECIFICATION

3.0 AUTHORITY OF OFFICERS OF TRANSNET

3.1 The Contractor shall co-operate with the officers of the network operator and shall comply with all instructions issued and restrictions imposed with respect to the Works which bear on the existence and operation of the network operator's railway lines and high-voltage equipment.

3.2 Without limiting the generality of the provisions of clause 3.1, any duly authorised representative of the network operator, having identified himself, may stop the work if, in his opinion, the safe passage of trains or the safety of the network operator's assets or any person is affected. **CONSIDERATIONS OF SAFETY SHALL TAKE PRECEDENCE OVER ALL OTHER CONSIDERATIONS**.

4.0 CONTRACTOR'S REPRESENTATIVES AND STAFF

4.1 The Contractor shall nominate Responsible Representatives of whom at least one shall be available at any hour for call-out in cases of emergency. The Contractor shall provide the Contract Supervisor with the names, addresses and telephone numbers of the representatives.

4.2 The Contractor guarantees that he has satisfied himself that the Responsible Representative is fully conversant with this specification and that he shall comply with all his obligations in respect thereof.

4.3 The Contractor shall ensure that all contractor staff receives relevant awareness, educational and competence training regarding safety as prescribed.

5.0 OCCUPATIONS AND WORK PERMITS

5.1 Work to be done during total occupation or during an occupation between trains or under a work permit shall be done in a manner decided by the Contract Supervisor and at times to suit the network operator requirements.

5.2 The Contractor shall organise the Works in a manner which will minimise the number and duration of occupations and work permits required.

5.3 The network operator will not be liable for any financial or other loss suffered by the Contractor arising from his failure to complete any work scheduled during the period of an occupation or work permit.

5.4 The Contractor shall submit to the Contract Supervisor, in writing, requests for occupations or work permits together with details of the work to be undertaken, at least 21 days before they are required. The network operator does not undertake to grant an occupation or work permit for any particular date, time or duration.

5.5 The network operator reserves the right to cancel any occupation or work permit at any time before or during the period of occupation or work permit. If, due to cancellation or change in date or time, the Contractor is not permitted to start work under conditions of total occupation or work permit at the time arranged, all costs caused by the cancellation shall be born by the Contractor except as provided for in clauses 5.6 to 5.8.

5.6 When the Contractor is notified less than 2 hours before the scheduled starting time that the occupation or work permit is cancelled, he may claim reimbursement of his direct financial losses caused by the loss of working time up to the time his labour and plant are employed on other work, but not exceeding the period of the cancelled occupation or work permit.

5.7 When the Contractor is notified less than 2 hours before the scheduled starting time, or during an occupation or work permit, that the duration of the occupation or work permit is reduced, he may claim reimbursement of his direct financial losses caused by the loss of working time due to the reduced duration of the occupation or work permit.

5.8 Reimbursement of the Contractor for any loss of working time in terms of clause 5.6 and 5.7, shall be subject to his claims being submitted within 14 days of the event with full details of labour and plant involved, and provided that the Contract Supervisor certifies that no other work on which the labour and plant could be employed was immediately available.

5.9 Before starting any work for which an occupation has been arranged, the Contractor shall obtain from the Contract Supervisor written confirmation of the date, time and duration of the occupation.

5.10 Before starting any work for which a work permit has been arranged, the Responsible Representative shall read and sign portion C of the Work Permit, signifying that he is aware of the work boundaries within which work may be undertaken. After the work for which the permit was granted has been completed, or when the

work permit is due to be terminated, or if the permit is cancelled after the start, the same person who signed portion C shall sign portion D of the Work Permit, thereby acknowledging that he is aware that the electrical equipment is to be made “live”. The Contractor shall advise all his workmen accordingly.

6.0 SPEED RESTRICTIONS AND PROTECTION

6.1 When speed restrictions are imposed by the network operator because of the Contractor's activities, the Contractor shall organise and carry out his work so as to permit the removal of the restrictions as soon as possible.

6.2 When the Contract Supervisor considers protection to be necessary the Contractor shall, unless otherwise agreed, provide all protection including flagmen, other personnel and all equipment for the protection of the network operator's and the Contractor's personnel and assets, the public and including trains.

6.2.1 The network operator will provide training free of charge of the Contractor's flagmen and other personnel performing protection duties. The Contractor shall consult with the Contract Supervisor, whenever he considers that protection will be necessary, taking into account the minimum permissible clearances set out in the Manual for Track Maintenance (Document no. BBB0481):

- Drawing no. BE-97 Sheet 1: Horizontal Clearances: 1065mm gauge (Annexure 1 sheet 1)
- Drawing no. BE-97 Sheet 2: Vertical Clearances: 1065mm gauge (Annexure 1 sheet 2)
- Drawing no. BE-97 Sheet 3: Clearances: Platform (Annexure 1 sheet 3)
- Drawing no. BE-97 Sheet 5: Clearances: 610mm Gauge (Annexure 1 sheet 5)

6.3 The Contractor shall appoint a Responsible Representative to receive and transmit any instruction which may be given by the network operator personnel providing protection.

7.0 ROADS AND ROADS ON THE NETWORK OPERATOR’S PROPERTY

7.1 The Contractor shall take every reasonable precaution to prevent damage to any roads or bridges used to obtain access to the site, and shall select routes, use vehicles, and restrict loads so that any extraordinary traffic as may arise from the moving of plant or material to or from the site shall be limited as far as is reasonably possible.

7.2 The Contractor shall not occupy or interfere in any way with the free use of any public or private road, right-of-way, path or street unless the Contract Supervisor has obtained the approval of the road authority concerned.

8.0 CLEARANCES

8.1 No temporary works shall encroach on the appropriate minimum clearances set out in the Manual for Track Maintenance (Document no. BBB0481):

- Drawing no. BE-97 Sheet 1: Horizontal Clearances: 1065mm gauge (Annexure 1 sheet 1)
- Drawing no. BE-97 Sheet 2: Vertical Clearances: 1065mm gauge (Annexure 1 sheet 2)
- Drawing no. BE-97 Sheet 3: Clearances: Platform (Annexure 1 sheet 3)
- Drawing no. BE-97 Sheet 5: Clearances: 610mm Gauge (Annexure 1 sheet 5)

9.0 STACKING OF MATERIAL

9.1 The Contractor shall not stack any material closer than 3m from the centre line of any railway line without prior approval of the Contract Supervisor.

10.0 EXCAVATION, SHORING, DEWATERING AND DRAINAGE

10.1 Unless otherwise approved by the Contract Supervisor any excavation adjacent to a railway line shall not encroach on the hatched area shown in Figure 1.

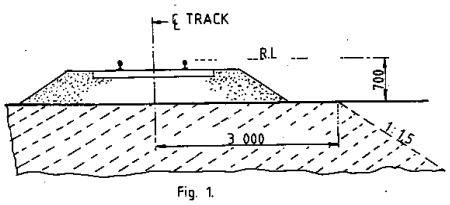

Fig. 1.

10.2 The Contractor shall provide, at his own cost any shoring, dewatering or drainage of any excavation unless otherwise stipulated elsewhere in the Contract.

10.3 Where required by the Contract Supervisor, drawings of shoring for any excavation under or adjacent to a railway line shall be submitted and permission to proceed, obtained before the excavation is commenced.

10.4 The Contractor shall prevent ingress of water to the excavation but where water does enter, he shall dispose of it as directed by the Contract Supervisor.

10.5 The Contractor shall not block, obstruct or damage any existing drains either above or below ground level unless he has made adequate prior arrangements to deal with drainage.

11.0 FALSEWORK FOR STRUCTURES

11.1 Drawings of falsework for the construction of any structure over, under or adjacent to any railway line shall be submitted to the Contract Supervisor and his permission to proceed obtained before the falsework is erected. Each drawing shall be given a title and a distinguishing number and shall be signed by a registered professional engineer certifying that he has checked the design of the falsework and that the drawings are correct and in accordance with the design.

11.2 After the falsework has been erected and before any load is applied, the Contractor shall submit to the Contract Supervisor a certificate signed by a registered professional engineer certifying that he has checked the falsework and that it has been erected in accordance with the drawings. Titles and numbers of the drawings shall be stated in the certificate. Notwithstanding permission given by the Contract Supervisor to proceed, the Contractor shall be entirely responsible for the safety and adequacy of the falsework.

12.0 PILING

12.1 The Contract Supervisor will specify the conditions under which piles may be installed on the network operator’s property.

13.0 UNDERGROUND SERVICES

13.1 No pegs or stakes shall be driven or any excavation made before the Contractor has established that there are no underground services which may be damaged thereby.

13.2 Any damage shall be reported immediately to the Contract Supervisor, or to the official in charge at the nearest station, or to the traffic controller in the case of centralised traffic control.

14.0 BLASTING AND USE OF EXPLOSIVES

14.1 When blasting within 500m of a railway line, the Contractor shall observe the requirements stipulated in this specification.

14.2 No blasting shall be carried out except with the prior written permission of the Contract Supervisor and under such conditions as he may impose.

14.3 On electrified lines the Contractor shall also obtain the permission of the Electrical Officer (Contracts) before blasting, and shall give at least 21 days notice of his intention to blast. No blasting shall be done in the vicinity of electrified lines unless a member of the network operator's electrical personnel is present.

14.4 The Contractor shall arrange for the supply, transport storage and use of explosives.

14.5 The Contractor shall have labour, tools and plant, to the satisfaction of the Contract Supervisor, available on the site to clear immediately any stones or debris deposited on the track or formation by blasting, and to repair any damage to the track or formation immediately after blasting. Repairs to the track shall be carried out only under the supervision of a duly authorised representative of the network operator.

14.6 The Contractor shall notify the Contract Supervisor of his intention to blast at least 21 days before the commencement of any blasting operations.

14.7 Before any blasting is undertaken, the Contractor and the Contract Supervisor shall jointly examine and measure up any buildings, houses or structures in the vicinity of the proposed blasting to establish the extent of any existing cracking or damage to such structures, etc. The Contractor, shall, subject to the provisions stipulated in the Contract Insurance Policy, make good any deterioration of such buildings, houses, or structures, which, in the opinion of the Contract Supervisor, was directly caused by the blasting.

14.8 After completion of the blasting the Contractor shall obtain a written clearance from each landowner in

the vicinity of the blasting operations to the effect that all claims for compensation in respect of damage caused by the blasting operations to their respective properties, have been settled.

14.9 The Contractor shall provide proof that he has complied with the provisions of clauses 10.17.1 to 10.17.4 of the Explosives Regulations (Act 26 of 1956 as amended).

14.10 Blasting within 500m of a railway line will only be permitted during intervals between trains. A person appointed by the Contract Supervisor, assisted by flagmen with the necessary protective equipment, will be in communication with the controlling railway station.

Only this person will be authorised to give the Contractor permission to blast, and the Contractor shall obey his instructions implicitly regarding the time during which blasting may take place.

14.11 The flagmen described in clause14.10, where provided by the network operator, are for the protection of trains and the network operator's property only, and their presence does not relieve the Contractor in any manner of his responsibilities in terms of Explosives Act or Regulations, or any obligation in terms of this Contract.

14.12 The person described in clause 14.10 will record in a book provided and retained by the network operator, the dates and times:-

(i) when each request is made by him to the controlling station for permission to blast;

(ii) when blasting may take place;

(iii) when blasting actually takes place; and

(iv) when he advises the controlling station that the line is safe for the passage of trains.

14.13 Before each blast the Contractor shall record in the same book, the details of the blast to be carried out. The person appointed by the Contract Supervisor and the person who will do the blasting shall both sign the book whenever an entry described in clause 14.12 is made.

15.0 RAIL TROLLEYS

15.1 The use of rail trolleys or trestle trolleys on a railway line for working on high voltage equipment will be permitted only if approved by the Contract Supervisor and under the conditions stipulated by him.

15.2 All costs in connection with trolley working and any train protection services requested by the Contractor shall, be borne by the Contractor, unless otherwise agreed.

16.0 SIGNAL TRACK CIRCUITS

16.1 Where signal track circuits are installed, the Contractor shall ensure that no material capable of conducting an electrical current makes contact between rails of railway line/lines.

16.2 No signal connections on track-circuited tracks shall be severed without the Contract Supervisor's knowledge and consent.

17.0 PENALTY FOR DELAYS TO TRAINS

17.1 If any trains are delayed by the Contractor and the Contract Supervisor is satisfied that the delay was avoidable, a penalty will be imposed on the Contractor as stipulated in the contract, for the period and number of trains delayed.

18.0 SURVEY BEACONS AND PEGS

18.1 The Contractor shall not on any account move or damage any beacon, bench mark, reference mark, signal or trigonometrical station in the execution of the Works without the written approval of the Contract Supervisor.

Should the Contractor be responsible for any such occurrence, he shall report the circumstances to the Contract Supervisor who will arrange with the Director-General of Surveys for replacement of the beacon or mark at the cost of the Contractor.

18.2 The Contractor shall not move or damage any cadastral or mining beacon without the written approval of the Contract Supervisor and before it has been referenced by a registered land surveyor. Any old boundary beacon, which becomes an internal beacon on creation of new boundaries, shall not be moved without the written approval of the Contract Supervisor.

Should the Contractor move or damage any cadastral or mining beacon without authority, he shall be responsible for having it replaced, at his cost, by a land surveyor.

18.3 The Contractor shall preserve all pegs and bench marks. Such survey points shall not be removed without the written approval of the Contract Supervisor. Should any peg or benchmark be removed without authority, the Contract Supervisor will arrange for its replacement and the cost will be recovered from the Contractor. No claim will be considered for delay in replacing any such peg or bench mark. Each peg replaced shall be checked by the Contractor.

18.4 Where a new boundary has been established, beacons on the fence line shall not be disturbed, and fence posts or anchors may not be placed or excavations made within 0,6 m of any beacon without the prior written approval of the Contract Supervisor.

19.0 TEMPORARY LEVEL CROSSINGS

19.1 The Contract Supervisor may, on request of the Contractor, and if necessary for the purpose of execution of the Works, permit the construction of a temporary level crossing over a railway a line at a position approved by the Contract Supervisor and at the Contractor's cost. The period for which the temporary level crossing is permitted will be at the discretion of the Contract Supervisor.

19.2 The Contractor will provide protection and supervise the construction of the road over the track(s) and within the railway servitude at the level crossing, as well as the erection of all road signs and height gauges. All cost to be borne by the applicant.

The Contractor shall exercise extreme caution in carrying out this work, especially in respect of damage to tracks, services, overhead power and communications routes and prevent contact with “live” overhead electrical equipment.

Unless otherwise agreed, the Contractor will provide the service deviations or alterations to the network operator’s track-, structure-, drainage-, electrical-, telecommunications- and train authorisation systems to accommodate the level crossing.

19.3 The Contractor shall take all necessary steps including the provision of gates, locks and, where necessary, watchmen to restrict the use of the temporary level crossing to himself and his employees, his subcontractors and their employees, the staff of the network operator and to such other persons as the Contract Supervisor may permit and of whose identity the Contractor will be advised. If so ordered by the Contract Supervisor, the Contractor shall provide persons to control road traffic using the temporary level crossing. Such persons shall stop all road traffic when any approaching train is within seven hundred and fifty (750) metres of the temporary level crossing, and shall not allow road traffic to proceed over it until the lines are clear.

19.4 The Contractor shall maintain the temporary level crossing within the railway servitude in good condition for the period it is in use. A temporary agreement with the road authority to be concluded for the maintenance of the level crossing outside the railway servitude.

19.5 When the temporary level crossing is no longer required by the Contractor, or permitted by the network operator, the Contractor shall at his own cost remove it and restore the site and the network operator’s track-, structure-, drainage-, electrical-, telecommunications- and train authorisation systems to its original condition. Work over the tracks and within the railway servitude will be supervised by the network operator.

20.0 COMPLETION OF THE WORKS

20.1 On completion of the works, the Contractor shall remove all the remaining construction plant and material from the site, other than material which is the property of the network operator, and leave the site in a clean, neat and tidy condition. If material and plant is required for the liability and maintenance period the Contract supervisor must authorise it’s retention on site.

21.0 PROTECTION OF PERSONS AND PROPERTY

21.1 The Contractor shall provide and maintain all lights, guards, barriers, fencing and watchmen when and where necessary or as required by the Contract Supervisor or by any statutory authority, for the protection of the Works and for the safety and convenience of the public.

Red, yellow, green or blue lights may not be used by the Contractor as they can be mistaken for signals. Red, yellow, green or white flags shall only be used for protection by the Contractor. Within the precincts of a port the Contractor shall obtain the permission of the Port Captain before installing any light.

21.2 The Contractor shall take all the requisite measures and precautions during the course of the Works to:

(i) protect the public and property of the public,

(ii) protect the property and workmen of both the network operator and the Contractor,

(iii) avoid damage to and prevent trespass on adjoining properties, and

(iv) ensure compliance with any instruction issued by the Contract Supervisor or other authorised person, and with any stipulation embodied in the contract documents which affects the safety of any person or thing.

21.3 The network operator will provide, at its own cost, protection for the safe working of trains during such operations as the Contract Supervisor may consider necessary. Protection by the network operator for any purpose whatsoever, does not absolve the Contractor of his responsibilities in terms of the Contract.

21.4 The Contractor shall take all precautions and appoint guards, watchmen and compound managers for prevention of disorder among and misconduct by the persons employed on the Works and by any other persons, whether employees or not, on the work site and for the preservation of the peace and protection of persons and property in the direct neighbourhood. Any relocation of camps because of disorder shall be at the Contractor's expense.

21.5 All operations necessary for the execution of the Works, including the provision of any temporary work and camping sites, shall be carried out so as not to cause veldt fires, ground and environmental pollution, soil erosion or restriction of or interference with streams, furrows, drains and water supplies.

If the original surface of the ground is disturbed in connection with the Works, it shall be made good by the Contractor to the satisfaction of the land owner, occupier or responsible authority.

21.6 The Contractor shall take all reasonable steps to minimise noise and disturbance when carrying out the Works, including work permitted outside normal working hours.

21.7 Dumping of waste or excess materials by the Contractor shall, in urban areas, be done under the direction and control of, and at sites made available by the local authority. Dumping outside local authority boundaries shall be done only with the express permission and under the direction and control of the Contract Supervisor.

21.8 The Contractor shall comply with environmental protection measures and specifications stipulated by the Contract Supervisor and/or local and environmental authorities.

22.0 INTERFERENCE WITH THE NETWORK OPERATOR'S ASSETS AND WORK ON OPEN LINES

22.1 The Contractor shall not interfere in any manner whatsoever with an open line, nor shall he carry out any work or perform any act which affects the security, use or safety of an open line except with the authority of the Contract Supervisor and in the presence of a duly authorised representative of the network operator.

22.2 The Contractor shall not carry out any work or operate any plant, or place any material whatsoever nearer than three metres from the centre line of any open line except with the written permission of the Contract Supervisor and subject to such conditions as he may impose.

22.3 Care must be taken not to interfere with or damage any services such as overhead wire routes, cables or pipes and optical fibre cable, except as provided for the work specified. The Contractor will be held responsible for any damage to or interruption of such services arising from any act or omission on his part or of any of his employees, or persons engaged by him on the Works. The cost of repairing, replacing or restoring the services, as well as all other costs arising from any damage to services, shall be borne by, and will be recovered from the Contractor.

22.4 Authority granted by the Contract Supervisor and the presence of an authorised representative of the network operator in terms hereof, shall not relieve the Contractor of his duty to comply with this specification.

23.0 ACCESS, RIGHTS-OF-WAY AND CAMPSITES

23.1 Where entry onto the network operator's property is restricted, permission to enter will be given only for the purpose of carrying out the Works and will be subject to the terms and conditions laid down by the network operator.

23.2 The Contractor shall arrange for campsites, workplaces and access thereto as well as for any right-of-

way over private property to the site of the Works, and for access within the boundaries of the network operator's property. The owners of private property to be traversed shall be approached and treated with tact and courtesy by the Contractor, who shall, if necessary, obtain a letter of introduction to such property owners from the Contract Supervisor.

The Contractor shall be responsible for the closing of all gates on roads and tracks used by him or his employees. Except with the prior approval of the Contract Supervisor and the owner or occupier of any private land to be traversed, the Contractor shall not cut, lower, damage, remove or otherwise interfere with any fence or gate which is either on the network operator's property or on private property and which restricts access to the Works. Where such approval has been given, the Contractor shall prevent entry of animals or unauthorised persons onto the network operator's or private property, and shall make the fences safe against trespass at the close of each day's work.

23.3 The Contractor shall take all reasonable steps to confine the movement of vehicles and plant to the approved right-of-way to minimise damage to property, crops and natural vegetation.

23.4 When access is no longer required, and before completion of the Works, the Contractor shall repair, restore or replace any fence or gate damaged during execution of the Works to the satisfaction of the Contract Supervisor and shall furnish the Contract Supervisor with a certificate signed by the owner and occupier of land over which he has gained access to a campsite, workplace and the Works, certifying that the owner and occupier have no claim against the Contractor or the network operator arising from the Contractor's use of the land. Should the Contractor be unable to obtain the required certificate, he shall report the circumstances to the Contract Supervisor.

24.0 SUPERVISION

24.1 The Contract Supervisor will provide overall technical superintendence of the Works, and may direct the Contractor in terms of the provisions of the Contract or in respect of any measures which the Contract Supervisor may require for the operations of the network operator, the safety of trains, property and workmen of the network operator, and for the safety of other property and persons. The Contractor shall carry out the directions of the Contract Supervisor. The superintendence exercised by the Contract Supervisor, including any agreement, approval, refusal or withdrawal of any approval given, shall not relieve the Contractor of any of his duties and liabilities under the Contract, and shall not imply any assumption by the network operator or by the Contract Supervisor of the legal and other responsibilities of the Contractor in carrying out the Works.

24.2 The Contract Supervisor may delegate to any deputy or other person, any of his duties or functions under the Contract. On receiving notice in writing of such delegation, the Contractor shall recognise and obey the deputy or person to whom any such duties or functions have been delegated as if he were the Contract Supervisor.

24.3 The Contractor shall exercise supervision over the Works at all times when work is performed or shall be represented by an agent having full power and authority to act on behalf of the Contractor. Such agent shall be competent and responsible, and have adequate experience in carrying out work of a similar nature to the Works, and shall exercise personal supervision on behalf of the Contractor. The Contract Supervisor shall be notified in writing of such appointment which will be subject to his approval.

24.4 The Contractor or his duly authorised agent shall be available on the site at all times while the Works are in progress to receive the orders and directions of the Contract Supervisor.

25.0 HOUSING OF EMPLOYEES

25.1 The Contractor shall, where necessary, make his own arrangements for suitable housing of his employees. Where temporary housing is permitted by the Contract Supervisor on any part of the site, the Contractor shall provide suitable sanitation, lighting and potable water supplies in terms of the requirements of the local authority or the current network operator’s specification; Minimum Communal Health Requirements in Areas outside the Jurisdiction of a Local Authority - E.4B, as applicable.

25.2 Fouling the area inside or outside the network operator's boundaries shall be prevented. The Contractor will be called upon by the Contract Supervisor to dispose of any foul or waste matter generated by the Contractor.

26.0 OPTICAL FIBRE CABLE ROUTES

26.1 The Contractor shall not handle, impact, move or deviate any optical fibre cable without prior approval.

26.2 Works that in any way affect the optical fibre cable requires prior approval from the Contract Supervisor

who will determine the work method and procedures to be followed.

PART B - SPECIFICATION FOR WORK NEAR HIGH-VOLTAGE ELECTRICAL EQUIPMENT

27.0 GENERAL

27.1 This specification is based on the contents of Transnet's publication ELECTRICAL SAFETY INSTRUCTIONS, as amended, a copy of which will be made available on loan to the Contractor for the duration of the contract.

These instructions apply to all work near "live" high-voltage equipment maintained and/or operated by the network operator, and the onus rests on the Contractor to ensure that he obtains a copy.

27.2 This specification must be read in conjunction with and not in lieu of the Electrical Safety Instructions.

27.3 The Contractor's attention is drawn in particular to the contents of Part I, Sections 1 and 2 of the Electrical Safety Instructions.

27.4 The Electrical Safety Instructions cover the minimum safety precautions which must be taken to ensure safe working on or near high-voltage electrical equipment, and must be observed at all times. Should additional safety measures be considered necessary because of peculiar local conditions, these may be ordered by and at the discretion of the Electrical Officer (Contracts).

27.5 The Contractor shall obtain the approval of the Electrical Officer (Contracts) before any work is done which causes or could cause any portion of a person's body or the tools he is using or any equipment he is handling, to come within 3 metres of any "live" high-voltage equipment.

27.6 The Contractor shall regard all high-voltage equipment as "live" unless a work permit is in force.

27.7 Safety precautions taken or barriers erected shall comply with the requirements of the Electrical Officer (Contracts), and shall be approved by him before the work to be protected is undertaken by the Contractor. The Contractor shall unless otherwise agreed, bear the cost of the provision of the barriers and other safety precautions required, including the attendance of the network operator's staff where this is necessary.

27.8 No barrier shall be removed unless authorised by the Electrical Officer (Contracts).

28.0 WORK ON BUILDINGS OR FIXED STRUCTURES

28.1 Before any work is carried out or measurements are taken on any part of a building, fixed structure or earthworks of any kind above ground level situated within 3 metres of "live" high-voltage equipment, the Electrical Officer (Contracts) shall be consulted to ascertain the conditions under which the work may be carried out.

28.2 No barrier erected to comply with the requirements of the Electrical Officer (Contracts) shall be used as temporary staging or shuttering for any part of the Works.

28.3 The shuttering for bridge piers, abutments, retaining walls or parapets adjacent to or over any track may be permitted to serve as a barrier, provided that it extends at least 2,5 metres above any working level in the case of piers, abutments and retaining walls and 1,5 metres above any working level in the case of parapets.

29.0 WORK DONE ON OR OUTSIDE OF ROLLING STOCK, INCLUDING LOADING OR UNLOADING

29.1 No person may stand, climb or work, whilst on any platform, surface or foothold:

29.1.1 higher than the normal unrestricted access way, namely -

29.1.1.1 external walkways on diesel, steam and electric locomotives, steam heat vans, etc. and

29.1.1.2 walkways between coaches and locomotives.

29.1.2 of restricted access ways in terms of the Electrical Safety Instructions namely -

29.1.2.1 the floor level of open wagons

29.1.2.2 external walkways or decks of road-rail vehicles, on-track maintenance machines and material trains.

29.1.3 Unauthorised staff working on these platforms must be directly supervised by duly authorised persons in terms of clause 607.1.3 of the Electrical Safety Instructions. These persons must attend the relevant electrical safety module training. A letter of training must then be issued by an accredited training authority. A Category C Certificate of Authority must be obtained from the

local depot examining officer.

29.2 When in the above positions no person may raise his hands or any equipment he is handling above his head.

29.3 In cases where the Contractor operates his own rail mounted equipment, he shall arrange for the walkways on this plant to be inspected by the Electrical Officer (Contracts) and approved, before commencement of work.

29.4 The handling of long lengths of material such as metal pipes, reinforcing bars, etc should be avoided, but if essential they shall be handled as nearly as possible in a horizontal position below head height.

29.5 The Responsible Representative shall warn all persons under his control of the danger of being near “live” high-voltage equipment, and shall ensure that the warning is fully understood.

29.6 Where the conditions in clauses 30.1 to 30.4 cannot be observed the Electrical Officer (Contracts), shall be notified. He will arrange for suitable Safety measures to be taken. The Electrical Officer (Contracts), may in his discretion and in appropriate circumstances, arrange for a suitable employee of the Contractor to be specially trained by the network operator and at the Contractor’s cost, as an Authorised Person to work closer than 3 metres from “live” overhead conductors and under such conditions as may be imposed by the senior responsible electrical engineer of the network operator.

30.0 USE OF EQUIPMENT

30.1 Measuring Tapes and Devices

30.1.1 Measuring tapes may be used near “live” high-voltage equipment provided that no part of any tape or a person's body comes within 3 metres of the “live” equipment.

30.1.2 In windy conditions the distance shall be increased to ensure that if the tape should fall it will not be blown nearer than 3 metres from the “live” high-voltage equipment.

30.1.3 Special measuring devices longer than 2 metres such as survey sticks and rods may be used if these are of non-conducting material and approved by the responsible Electrical Engineer of the network operator, but these devices must not be used within 3 metres of “live” high-voltage equipment in rainy or wet conditions.

30.1.4 The assistance of the Electrical Officer (Contracts) shall be requested when measurements within the limits defined in clauses 31.1.1 to 31.1.3 are required.

30.1.5 The restrictions described in 31.1.1 to 31.1.3 do not apply on a bridge deck between permanent parapets nor in other situations where a barrier effectively prevents contact with the “live” high-voltage equipment.

30.2 Portable Ladders

30.2.1 Any type of portable ladder longer then 2 metres may only be used near “live” high-voltage equipment under the direct supervision of the Responsible Representative. He shall ensure that the ladder is always used in such a manner that the distance from the base of the ladder to any “live” high-voltage equipment is greater than the fully extended length of the ladder plus 3 metres. Where these conditions cannot be observed, the Electrical Officer (Contracts) shall be advised, and he will arrange for suitable safety measures to be taken.

31.0 CARRYING AND HANDLING MATERIAL AND EQUIPMENT

31.1 Pipes, scaffolding, iron sheets, reinforcing bars and other material which exceeds 2 metres in length shall be carried completely below head height near “live” high-voltage equipment. For maximum safety such material should be carried by two or more persons so as to maintain it as nearly as possible in a horizontal position. The utmost care must be taken to ensure that no part of the material comes within 3 metres of any “live” high-voltage equipment.

31.2 Long lengths of wire or cable shall never be run out in conditions where a part of a wire or cable can come within 3 metres of any “live” high-voltage equipment unless the Electrical Officer (Contracts) has been advised and has approved appropriate safety precautions.

31.3 The presence of overhead power lines shall always be taken account of especially when communications lines or cables or aerial cables, stay wires, etc. are being erected above ground level.

32.0 PRECAUTIONS TO BE TAKEN WHEN ERECTING OR REMOVING POLES, ANTENNAE, TREES ETC.

32.1 A pole may be handled for the purpose of erection or removal near high-voltage equipment under the following conditions:

(i) If the distance between the point at which the pole is to be erected or removed and the nearest “live” high-voltage equipment is more than the length of the pole plus 3 metres, the work shall be supervised by the Responsible Representative.

(ii) If the distance described in (i) is less than the length of the pole plus 3 metres, the Electrical Officer (Contracts) shall be consulted to arrange for an Authorised Person to supervise the work and to ensure that the pole is earthed where possible. The pole shall be kept in contact with the point of erection, and adequate precautions shall be taken to prevent contact with “live” high-voltage equipment.

32.2 The cost of supervision by an Authorised Person and the provision of earthing shall, unless otherwise agreed, be borne by the Contractor.

32.3 The provisions of clauses 33.1 and 33.2 shall also apply to the erection or removal of columns, antennae, trees, posts, etc.

33.0 USE OF WATER

33.1 No water shall be used in the form of a jet if it can make contact with any “live” high-voltage equipment or with any person working on such equipment.

34.0 USE OF CONSTRUCTION PLANT

34.1 "Construction plant" entails all types of plant including cranes, piling frames, boring machines, excavators, draglines, dewatering equipment and road vehicles with or without lifting equipment.

34.2 When work is being undertaken in such a position that it is possible for construction plant or its load to come within 3 metres of “live” high-voltage equipment, the Electrical Officer (Contracts) shall be consulted. He will arrange for an Authorised Person to supervise the work and to ensure that the plant is adequately earthed. The Electrical Officer (Contracts) will decide whether further safety measures are necessary.

34.3 The cost of any supervision by an Authorised Person and the provision of earthing shall, unless otherwise agreed, be borne by the Contractor.

34.4 When loads are handled by cranes, non-metallic rope hand lines shall be used, affixed to such loads so as to prevent their swinging and coming within 3 metres of “live” high-voltage equipment.

34.5 Clauses 35.1 to 35.4 shall apply *mutatis mutandis* to the use of maintenance machines of any nature.

35.0 WORK PERFORMED UNDER DEAD CONDITIONS UNDER COVER OF A WORK PERMIT

35.1 If the Responsible Representative finds that the work cannot be done in safety with the high-voltage electrical equipment “live”, he shall consult the Electrical Officer (Contracts) who will decide on the action to be taken.

35.2 If a work permit is issued the Responsible Representative shall-

(i) before commencement of work ensure that the limits within which work may be carried out have been explained to him by the Authorised Person who issued the permit to him, and that he fully understands these limits.

(ii) sign portion C of the permit before commencement of work;

(iii) explain to all persons under his control the limits within which work may be carried out, and ensure that they fully understand these limits;

(iv) care for the safety of all persons under his control whilst work is in progress; and

(v) withdraw all personnel under his control from the equipment on completion of the work before he signs portion D of the work permit.

36.0 TRACTION RETURN CIRCUITS IN RAILS

36.1 DANGEROUS CONDITIONS CAN BE CREATED BY REMOVING OR SEVERING ANY BOND.

36.2 Broken rails with an air gap between the ends, and joints at which fishplates are removed under "broken bond" conditions, are potentially lethal. The rails on either side of an air gap between rail ends on electrified lines shall not be touched simultaneously until rendered safe by the network operator personnel.

36.3 The Contractor shall not break any permanent bonds between rails or between rails and any structure. He shall give the Contract Supervisor at least 7 days written notice when removal of such bonds is necessary.

36.4 No work on the track which involves interference with the traction return rail circuit either by cutting or removing the rails, or by removal of bonds shall be done unless the Electrical Officer (Contracts) is consulted. He will take such precautions as may be necessary to ensure continuity of the return circuit before permitting the work to be commenced.

37.0 HIGH-VOLTAGE ELECTRICAL EQUIPMENT NOT MAINTAINED AND/OR OPERATED BY THE NETWORK OPERATOR

Where the work is undertaken on or near high-voltage electrical equipment which is not maintained and/or operated by the network operator, the Occupational Health and Safety Act No. 85 of 1993, and Regulations and Instructions, or the Mines Health and Safety Act (Act 29 of 1996), shall apply.

Such equipment includes:-

(i) Eskom and municipal equipment;

(ii) The Contractor's own power supplies; and

(iii) Electrical equipment being installed but not yet taken over from the Contractor.

END