A3_1220C_MST_1

| 1 | 2 | 3 | 4 | 5 | 6 | 7 | 8 |
|---|---|---|---|---|---|---|---|

## GENERAL NOTES

A) THIS DRAWING TO BE USED FOR ELECTRICAL PURPOSES ONLY.

B) DO NOT SCALE THIS DRAWING.

C) REFER TO ARCHITECTS AND STRUCTURAL ENGINEERS DRAWINGS FOR ALL BUILDING DIMENSIONS, LATEST BUILDING REVISIONS AND SERVICES.

D) THIS DRAWING IS TO BE READ IN CONJUNCTION WITH THE ELECTRICAL SPECIFICATIONS.

E) ALL WORK TO COMPLY WITH RELEVANT STANDARD CODES OF PRACTICE, SPECIFICATIONS AND REGULATIONS.

F) NOT WITHSTANDING ANYTHING TO THE CONTRARY, ALL RIGHTS RESERVED. NO PART OF THIS DRAWING MAY BE REPRODUCED IN ANY MATERIAL FORM (INCLUDING PHOTOCOPYING OR STORING IN ANY MEDIUM OR BY ELECTRONIC MEANS AND WHETHER OR NOT TRANSIENTLY OR INCIDENTLY TO SOME OTHER USE OF THIS DRAWING) AND ALSO, THIS DRAWING MAY NOT BE USED FOR ANY PURPOSE OR REASON OTHER THAN FOR WHICH IT WAS ORIGINALLY ISSUED, WITHOUT THE WRITTEN PERMISSION OF IBUYA CONSULTING ENGINEERS

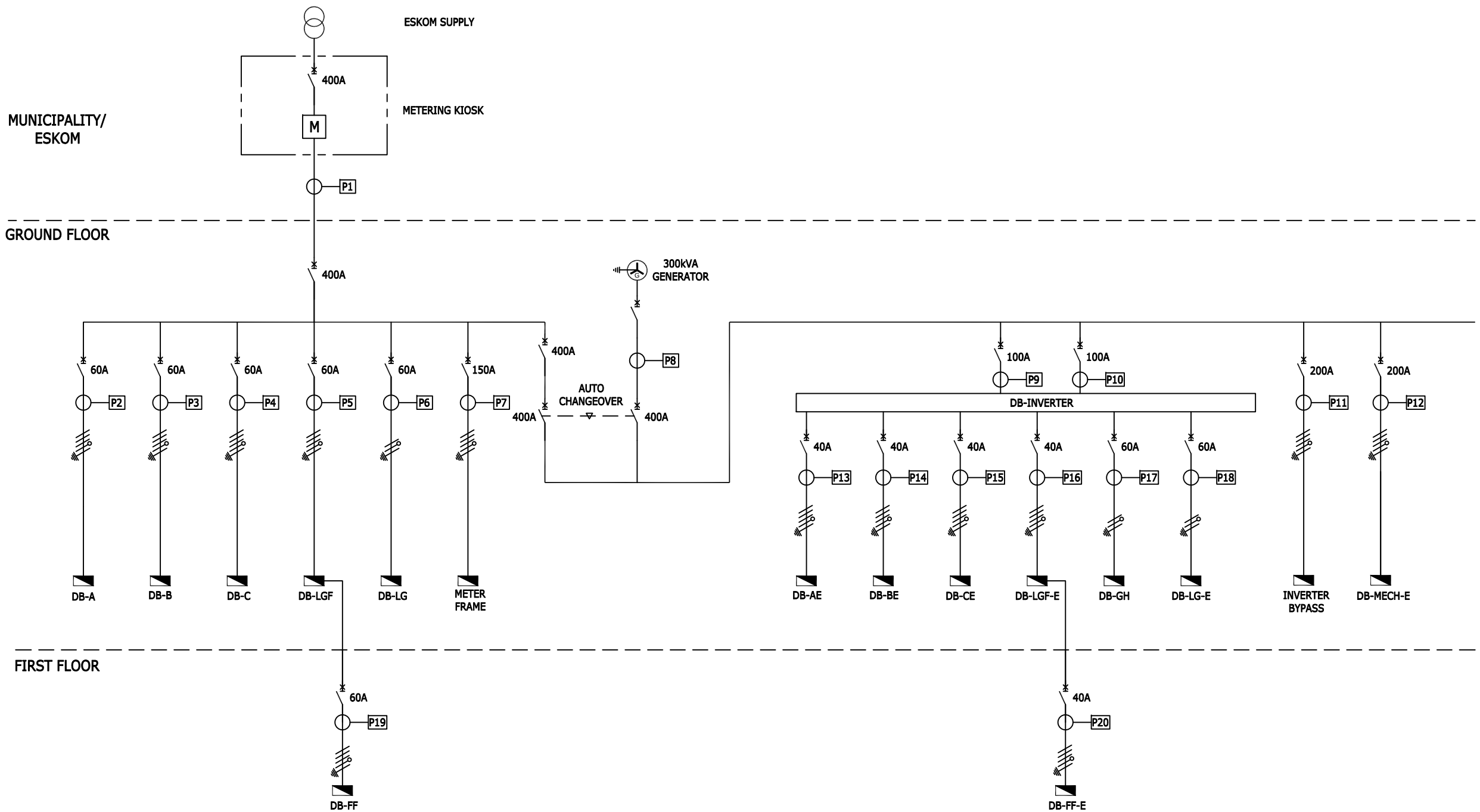


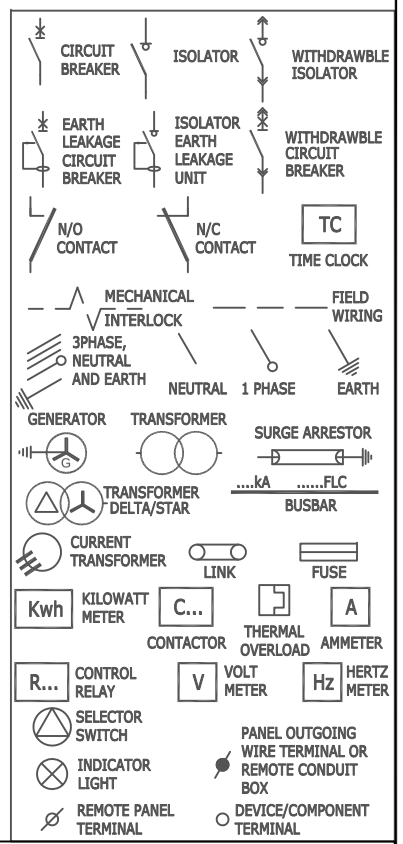


NOT WITHSTANDING ANYTHING TO THE CONTRARY, ALL RIGHTS RESERVED. NO PART OF THIS DRAWING MAY BE REPRODUCED IN ANY MATERIAL FORM (INCLUDING PHOTOCOPYING OR STORING IN ANY MEDIUM OR BY ELECTRONIC MEANS WHETHER OR NOT TRANSIENTLY OR INCIDENTLY TO SOME OTHER USE OF THIS DRAWING) AND ALSO, THIS DRAWING MAY NOT BE USED FOR ANY PURPOSE OR REASON OTHER THAN FOR WHICH IT WAS ORIGINALLY ISSUED, WITHOUT THE WRITTEN PERMISSION OF IBUYA CONSULTING ENGINEERS.

| REV | DESCRIPTION | BY | DATE | CHKD. |
|---|---|---|---|---|
| 0 | Original Issue | NG | 27/05/25 | KS |

| ENGINEER | DRAWN | DATE: | SCALE: | CHKD. |
|---|---|---|---|---|
| K.Singh | NG | 22/08/24 | NTS | MK |
| | | | PAPER SIZE: A3 | |

| PROJECT No. | DRAWING No. | SHEET: | REV |
|---|---|---|---|
| 23044 | 400 | 1 of 1 | 0 |

File Name : Lyr:

DRAWING TITLE: SAPS MSINSINI POLICE STATION

DRAWING TITLE: Overall Distribution Board Schematic Layout

IBUYA Consulting Engineers
"POWERING DEVELOPMENT"
BLOCK D
ESSEX PARK
46 ESSEX TERRACE
WESTVILLE
P.O. BOX 1692
WANDSBECK 3631
TEL: +27 (031) 2667332
FAX: +27 (031) 2667340
E-mail: ibuya@ibuya.co.za