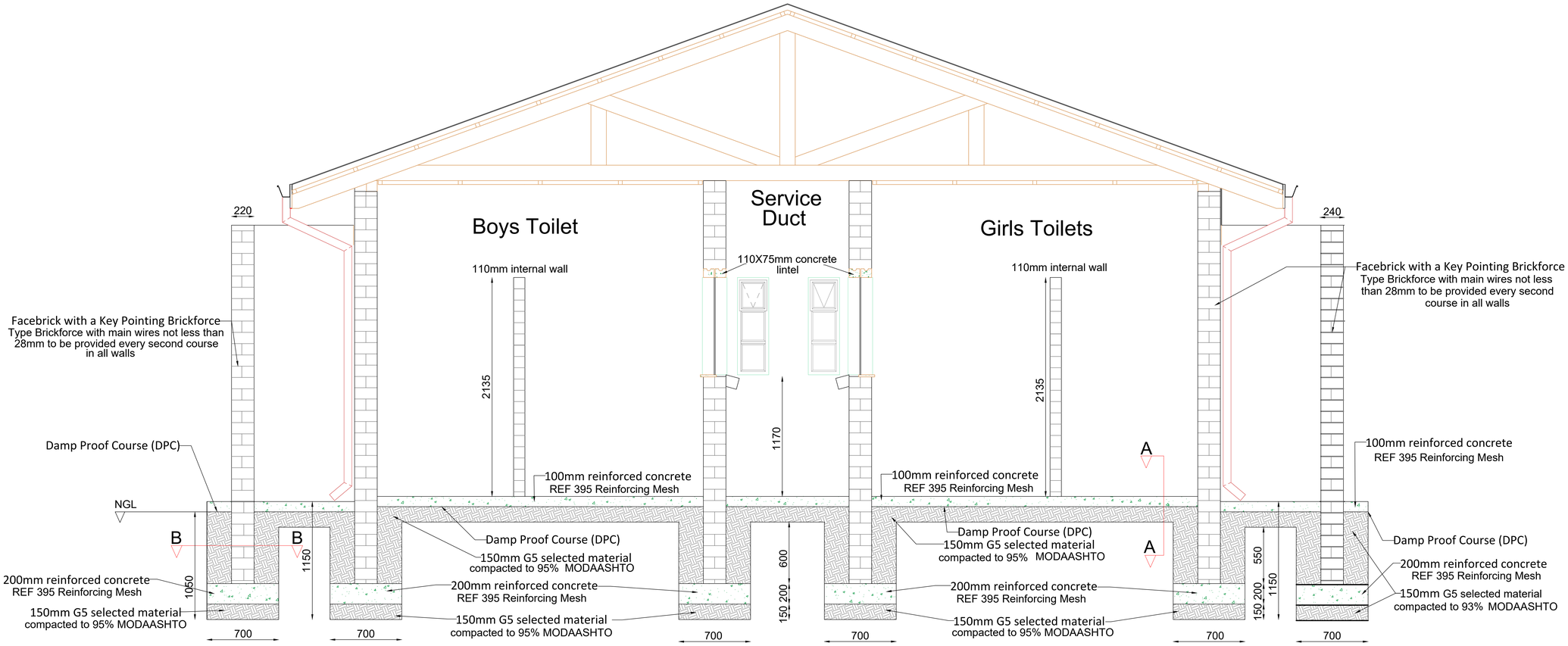


SCALE 1:16

## A Section A-A

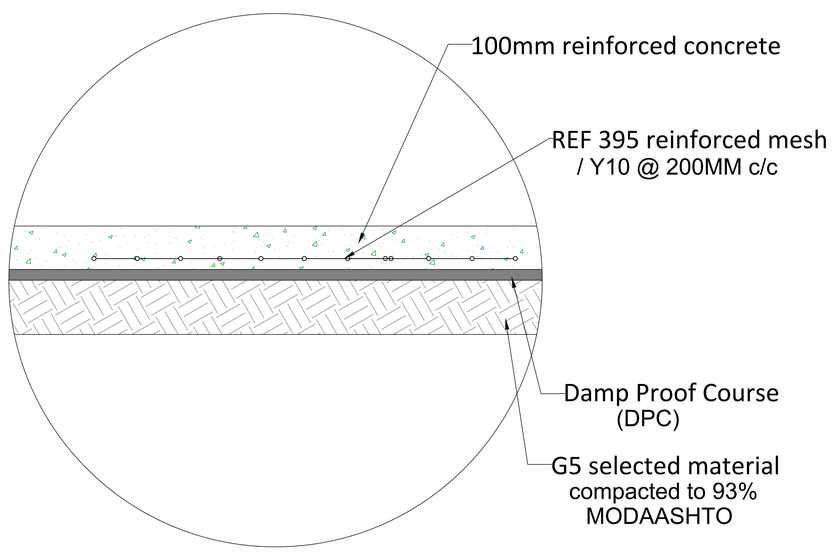


SCALE 1:10

## B Section B-B

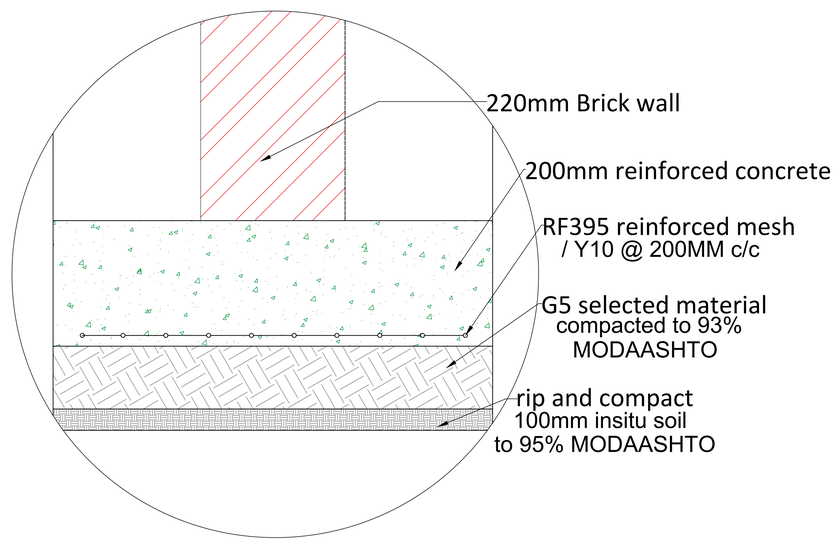


SCALE 1:10

### GENERAL NOTES

- ALL DIMENSIONS ARE IN mm AND MUST BE CHECKED
- DISCREPANCIES, ERRORS AND DIMENSIONS ARE TO BE REPORTED TO THE ARCHITECT (EMPLOYER) IMMEDIATELY THEY BECOME EVIDENT FOR RECTIFICATION OR CLARIFICATION BEFORE ANY CONSTRUCTION MAY COMMENCE.
- ALL MATERIALS AND CONSTRUCTION MUST COMPLY WITH THE NATIONAL BUILDING REGULATIONS (ACT NO 103 OF 1977) INCLUDING ALL AMENDMENTS, SANS 10400 AS WELL AS THE BY-LAWS OF THE LOCAL AUTHORITIES.
- CLEAR THE SITE OF AL VEGETATION, TOPSOIL, AND ORGANIC MATTER TO ATLEAST 1.5m AROUND THE FOUNDATION PERIMETER
- 250-MICRON PVC DAMP-PROOF MEBRANE SHOULD BE PLACED ABOVE THE SURFACE BED ON TOP OF THE APPROVED
- NO CONCRETE TO BE POURED UNTIL THE STEEL HAS BEEN INSPECTED BY CONSULTING ENGINEER
- CONTRACTOR TO MAINTAIN STEEL IN CORRECT POSITION AFTER PLACING AND DURING CONCRETING
- 10mm JOINTEX SEALED WITH POLYSULPHIDE ALL ROUND EXPANSION JOINT AT 5m MAX.
- ALL MATERIALS MUST BE FIXED AND FINISHED STRICTLY TO MANUFACTURER'S SPECIFICATION, UNLESS OTHERWISE SPECIFIED.
- SHOP DRAWINGS TO BE SUBMITTED FOR APPROVAL PRIOR TO MANUFACTURE OR INSTALLATION.
- COPY RIGHT AND RIGHT OF REPRODUCTION OF THIS DRAWING OR ANY PORTION THEREOF IS RESERVED BY GREENFIELD RESOURCES.

| REV. NO. | DATE | DESCRIPTION |
|---|---|---|
| 0 | -.-.- | Rev. |
| | | REVISIONS |

DEPARTMENT:

higher education & training
Department: Higher Education and Training
REPUBLIC OF SOUTH AFRICA

CLIENT:

IKHALA
PUBLIC FURTHER EDUCATION AND TRAINING COLLEGE

PROJECT CONSULTANT:

GREENFIELD RESOURCES
INTEGRITY | EFFICIENCY | AGILITY

Description: Alterations and Additions in Ikhala Tvet College: Sterkspruit Business Campus

Project Status: Stage 3: Ablution Foundation Details

Drg No: 25006DWG-C001-03DM

| | | | |
|---|---|---|---|
| Drawn by: | D.M | Date: | 19-09-2025 |
| Checked by: | D.T | Scale | As Shown |
| Project No. | 25006 | | |