TRANSET PIPELINES

FIREFIGTHING UPGRADE

HOWICK

FIRE CONTROL PANEL CAUSE AND EFFECT MATRIX

	Valve Description	Valve P&ID Tag	Zone	TEST MODE	
				PUSH BUTTON	
				DWP MANIFOLD MONITORS	SPILL BASIN BUND POURERS
1	Foam EPV Isolation Valve	08-XV-181		X	X
2	Manifold: Monitors	08-PCV-186A	Zone 1	X	X
3	Spill Basin Bund Pourers	08-PCV-186A	Zone 2	X	X
4	Pump-set P181/182			X	X
5	Fire Alarm Indication and Buzzer			X	X

TRANSET PIPELINES

FIREFIGTHING UPGRADE

HOWICK

FIRE CONTROL PANEL CAUSE AND EFFECT MATRIX

	Valve Description	Valve P&ID Tag	Zone	TEST MODE	
				PUSH BUTTON	
				DWP MANIFOLD MONITORS	SPILL BASIN BUND POURERS
1	Foam EPV Isolation Valve	08-XV-181			
2	Manifold: Monitors	08-PCV-186A	Zone 1	X	X
3	Spill Basin Bund Pourers	08-PCV-186A	Zone 2	X	X
4	Pump-set P181/182			X	X
5	Fire Alarm Indication and Buzzer			X	X

TRANSET PIPELINES

FIREFIGTHING UPGRADE

HOWICK

SCENARIO PANEL CAUSE AND EFFECT MATRIX

	Valve Description	Valve P&ID Tag	Zone	AUTO MODE	
				PUSH BUTTON	
				DWP MANIFOLD MONITORS	SPILL BASIN BUND POURERS
1	Foam EPV Isolation Valve	08-XV-181		X	X
2	Manifold: Monitors	08-PCV-186A	Zone 1	X	X
3	Spill Basin Bund Pourers	08-PCV-186A	Zone 2	X	X
4	Pump-set P181/182			X	X
5	Fire Alarm Indication and Buzzer			X	X

TRANSET PIPELINES

FIREFIGTHING UPGRADE

HOWICK

SCENARIO PANEL CAUSE AND EFFECT MATRIX

	Valve Description	Valve P&ID Tag	Zone	TEST MODE	
				PUSH BUTTON	
				DWP MANIFOLD MONITORS	SPILL BASIN BUND POURERS
1	Foam EPV Isolation Valve	08-XV-181			
2	Manifold: Monitors	08-PCV-186A	Zone 1	X	X
3	Spill Basin Bund Pourers	08-PCV-186A	Zone 2	X	X
4	Pump-set P181/182			X	X
5	Fire Alarm Indication and Buzzer			X	X

AUTOMATION STANDARD

PL 723

REV 3

Legend:

Items that remain unresolved (date 1 December 2009)

APPROVAL

RESPONSIBILITY	DESIGNATION	SIGNATURE	DATE
COMPILED BY	Transnet Pipelines Industrial Automation Technology		
APPROVED BY	Transnet Pipelines MCI Manager	RA Parsons	
ACCEPTED BY			

AMENDMENT RECORD

REV	REV DATE	CHG REQ NO.	CHANGE SUMMARY	PAGES AFFECTED
0.0	3/7/99	N/A	Document distributed for comment	All
0.1	3/8/99	N/A	Document distributed for approval	All
0.2			Document distributed for approval	All
0.3	24/08/00	N/A	Update for PCS7	All
0.5	23/07/01	N/A	Revised with Transnet Pipelines	All
0.6			Revision after DBN	All
0.7	15/02/02	N/A	Document submitted to Transnet Pipelines for comment	All
0.8	10/03/02	N/A	SCADA section added, document reformatted and submitted to Transnet Pipelines for comment	All
0.9	01/06/02	N/A	Transnet Pipelines comments added and document submitted for approval.	All
1.0	01/09/02	N/A	Document approved by Transnet Pipelines.	All
1.1	01/06/03	N/A	Document reformatted. Cross Reference added to end of document.	All
1.2	20/02/05	N/A	Launcher & LP Routing Group Description expanded.	All
2.0	03/04/2006	N/A	Document separated into an Automation Standard, defining Transnet Pipelines requirements, and an LSX Automation EDS, which details the practical implementation of the LSX Control System.	All
2.1	18/06/2007	N/A	Detail amended to reflect current practise. Mainline VSD device/groups added. Line Control and Reporting sections added.	All
2.2	22/07/2008	N/A	MCC Reporting section updated. Issued as a FEED Document for the NMPP Project.	All
2.3a	04/12/2008	N/A	NMPP requirements added. Submitted for TPL Approval.	All
2.3b	04/03/2009	N/A	Data from Part 1Rev 1.2 added. Comments received for Rev 2.3a added.	All
2.3c	26/03/2009	N/A	Update to include ABB ACS1000 detail, Machine Monitoring detail.	All
2.3d	31/03/2009	N/A	Review Workshop: TPL, Uhde, Siemens	All
3	1/12/2009	N/A	Issued as baseline document for NMPP Project.	All

DISTRIBUTION

COPY	ISSUED TO ORGANISATION / DESIGNATION	INDIVIDUALS NAME
MASTER		
1.		
2.		
3.		
4.		
5.		
6.		

TABLE OF CONTENTS

1 INTRODUCTION 11
1.1 GENERAL 11
1.2 PROCESS CONTROL OVERVIEW 11
1.2.1 INTAKE STATIONS 11
1.2.2 PUMP STATIONS 11
1.2.3 DELIVERY STATIONS 12
1.2.4 TERMINAL FACILITIES 12
1.2.5 REMOTE BLOCK VALVE CHAMBERS 12
1.2.6 TELECONTROL FACILITIES 12
1.3 ABBREVIATIONS 15
1.4 REFERENCES 15
2 CONTROL AND OPERATING PHILOSOPHY 16
2.1 DEFINITIONS 16
2.1.1 DEVICE 16
2.1.2 DEVICE GROUP 16
2.1.3 MODES OF OPERATION 16
2.1.4 MODES OF CONTROL 17
2.1.5 PRIMARY ROUTE 17
2.1.6 TRANSITION ROUTE 17
2.1.7 INTERLOCKS 18
3 DEVICE TYPICALS 19
3.1 STATION/MCC/SCC 19
3.1.1 DESCRIPTION 19
3.1.2 PLC I/O SIGNALS 19
3.1.3 CONTROL METHODOLOGY 19
3.1.4 POWER FAILURE 19
3.1.5 SCADA REPRESENTATION 19
3.2 AUTO / MANUAL 21
3.2.1 DESCRIPTION 21
3.2.2 PLC I/O SIGNALS 21
3.2.3 CONTROL METHODOLOGY 21
3.2.4 POWER FAILURE 21
3.2.5 SCADA REPRESENTATION 21
3.3 VALVES 22
3.3.1 DESCRIPTION 22
3.3.2 PLC I/O SIGNALS 22
3.3.3 CONTROL METHODOLOGY – ON/OFF VALVE 23
3.3.4 CONTROL METHODOLOGY – PROVER 4 WAY VALVE 24
3.3.5 CONTROL METHODOLOGY – PROVER BORSIG VALVE/RAM 26
3.3.6 POWER FAILURE 28
3.3.7 SCADA REPRESENTATION 28
3.4 CONTROL VALVES (NON MODULATING) 30
3.4.1 DESCRIPTION 30
3.4.2 PLC I/O SIGNALS 30
3.4.3 CONTROL METHODOLOGY 30
3.4.4 POWER FAILURE 32
3.4.5 SCADA REPRESENTATION 33
3.5 CONTROL VALVES (MODULATING) 35
3.5.1 DESCRIPTION FOR VALVES 35
3.5.2 PLC I/O SIGNALS 35
3.5.3 CONTROL METHODOLOGY 35
3.5.4 POWER FAILURE 37
3.5.5 SCADA REPRESENTATION 38
3.6 MAINLINE PUMP SETS – DIRECT ON LINE (SPAM 150C) 39
3.6.1 DESCRIPTION 39
3.6.2 HARDWIRED INTERFACE – PLC I/O SIGNALS 39
3.6.3 CONTROL METHODOLOGY 40
3.6.4 POWER FAILURE 43
3.6.5 SCADA REPRESENTATION 43

3.7 PUMP SETS – VSD (ABB AIR-COOLED ACS1000) 46
3.7.1 DESCRIPTION 46
3.7.2 PLC FIELD INTERFACE SIGNALS 46
3.7.3 PROFIBUS MAPPING – VSD TO PLC 47
3.7.4 CONTROL METHODOLOGY 49
3.7.5 RESET CONDITIONS 56
3.7.6 PLC / SCADA INTERFACE 57
3.7.7 SCADA REPRESENTATION 57
3.8 AUXILIARY MOTORS – DIRECT ON LINE 60
3.8.1 DESCRIPTION 60
3.8.2 PLC FIELD INTERFACE SIGNALS 60
3.8.3 CONTROL METHODOLOGY 60
3.8.4 POWER FAILURE 61
3.8.5 SCADA REPRESENTATION 61
3.9 AUXILIARY MOTORS – VARIABLE SPEED DRIVES 63
3.9.1 DESCRIPTION 63
3.9.2 PLC FIELD INTERFACE SIGNALS 63
3.9.3 CONTROL METHODOLOGY 64
3.9.4 POWER FAILURE 65
3.9.5 SCADA REPRESENTATION 65
3.10 ANALOGUE TRANSMITTER 66
3.10.1 DESCRIPTION 66
3.10.2 PLC FIELD INTERFACE SIGNALS 66
3.10.3 PARAMETRISATION 66
3.10.4 POWER FAILURE 68
3.10.5 SCADA REPRESENTATION 68
3.11 SWITCHES 70
3.11.1 DESCRIPTION 70
3.11.2 PLC FIELD INTERFACE SIGNALS 70
3.11.3 POWER FAILURE 70
3.11.4 SCADA REPRESENTATION 70
3.12 DUTY/STANDBY CONTROLLER 71
3.12.1 DESCRIPTION 71
3.12.2 DUTY/STANDBY SELECTION 71
3.12.3 PLC FIELD INTERFACE SIGNALS 72
3.12.4 POWER FAILURE 72
3.12.5 SCADA REPRESENTATION 72
4 GENERAL CONTROL PHILOSOPHY – DEVICE GROUPS 73
1.1 DEVICE GROUP CONTROL 73
4.2.1 GENERAL 73
4.2.2 SEQUENCES 74
4.3 RECEIVER 75
4.3.1 GROUP DESCRIPTION 75
4.3.2 MODES OF CONTROL 76
4.3.3 MODES OF OPERATION 76
4.3.4 GROUP FUNCTIONALITY 76
4.3.5 DEVICE GROUP AVAILABILITY 79
4.3.6 ALARM STRATEGIES 79
4.3.7 INTERLOCKING STRATEGIES 80
4.3.8 GRAPHIC REPRESENTATION 81
4.3.9 TYPICAL SEQUENCE FLOWCHARTS 81
4.4 MAINLINE PUMP SETS – D.O.L 82
4.4.1 GROUP DESCRIPTION 82
4.4.2 MODES OF CONTROL 82
4.4.3 MODES OF OPERATION 82
4.4.4 GROUP FUNCTIONALITY 83
4.4.5 DEVICE GROUP AVAILABILITY 85
4.4.6 ALARM STRATEGIES 85
4.4.7 INTERLOCKING STRATEGIES 86
4.4.8 GRAPHIC REPRESENTATION 86
4.4.9 TYPICAL SEQUENCE FLOWCHARTS 87
4.5 PUMP SET – VSD (VARIABLE SPEED DRIVE) 88
4.5.1 GROUP DESCRIPTION 88
4.5.2 MODES OF CONTROL 88
4.5.3 MODES OF OPERATION 88
4.5.4 GROUP FUNCTIONALITY 89
4.5.5 DEVICE GROUP AVAILABILITY 90
4.5.6 ALARM CONDITIONS 91
4.5.7 INTERLOCKING STRATEGIES 91

4.5.8 GRAPHIC REPRESENTATION 91
4.5.9 TYPICAL SEQUENCE FLOWCHARTS 92
4.6 SPEED CONTROL – VSD (HP APPLICATION) 93
4.6.1 GROUP DESCRIPTION 93
4.6.2 GROUP FUNCTIONALITY 93
4.6.3 DEVICE GROUP AVAILABILITY 94
4.6.4 ALARM STRATEGIES 94
4.6.5 INTERLOCKING STRATEGIES 94
4.6.6 GRAPHIC REPRESENTATION 94
4.7 LAUNCHER 96
4.7.1 GROUP DESCRIPTION - LAUNCHER 96
4.7.2 MODES OF CONTROL 97
4.7.3 MODES OF OPERATION 97
4.7.4 GROUP FUNCTIONALITY 97
4.7.5 DEVICE GROUP AVAILABILITY 99
4.7.6 ALARM STRATEGIES 100
4.7.7 INTERLOCKING STRATEGIES 101
4.7.8 GRAPHIC REPRESENTATION 101
4.7.9 TYPICAL SEQUENCE FLOWCHARTS 101
4.8 INTERFACE HANDLING 102
4.8.1 GROUP DESCRIPTION – INTERFACE HANDLING 102
4.8.2 MODES OF CONTROL 102
4.8.3 MODES OF OPERATION 102
4.8.4 GROUP FUNCTIONALITY 103
4.8.5 LAUNCH TABLE AVAILABILITY 107
4.8.6 DENSITY HUT LAUNCH AVAILABILITY 107
4.8.7 ALARM STRATEGIES 107
4.8.8 INTERLOCKING STRATEGIES 108
4.8.9 GRAPHIC REPRESENTATION 108
4.8.10 TYPICAL SEQUENCE FLOWCHARTS 108
4.9 HP ROUTING 109
4.9.1 GROUP DESCRIPTION 109
4.9.2 MODES OF CONTROL 110
4.9.3 MODES OF OPERATION 110
4.9.4 GROUP FUNCTIONALITY 110
4.9.5 DEVICE GROUP AVAILABILITY 114
4.9.6 ALARM STRATEGIES 114
4.9.7 INTERLOCKING STRATEGIES 114
4.9.8 GRAPHIC REPRESENTATION 115
4.9.9 TYPICAL SEQUENCE FLOWCHARTS 116
4.10 FLOW CONTROL 117
4.10.1 GROUP DESCRIPTION 117
4.10.2 DEVICE GROUP OBJECT CONTROL 118
4.10.3 MODES OF CONTROL 118
4.10.4 MODES OF OPERATION 118
4.10.5 GROUP FUNCTIONALITY 118
4.10.6 DEVICE GROUP AVAILABILITY 121
4.10.7 ALARM STRATEGIES 121
4.10.8 INTERLOCKING STRATEGIES 121
4.10.9 GRAPHIC REPRESENTATION 121
4.11 SUMP INJECTION (VENTURI) 123
4.11.1 GROUP DESCRIPTION 123
4.11.2 MODES OF CONTROL 123
4.11.3 MODES OF OPERATION 123
4.11.4 GROUP FUNCTIONALITY 124
4.11.5 DEVICE GROUP AVAILABILITY 125
4.11.6 ALARM STRATEGIES 125
4.11.7 INTERLOCKING STRATEGIES 125
4.11.8 GRAPHIC REPRESENTATION 126
4.11.9 TYPICAL SEQUENCE FLOWCHARTS 126
4.12 SUMP INJECTION (SUMP PUMP) 127
4.12.1 GROUP DESCRIPTION 127
4.12.2 MODES OF CONTROL 127
4.12.3 MODES OF OPERATION 127
4.12.4 GROUP FUNCTIONALITY 127
4.12.5 DEVICE GROUP AVAILABILITY 128
4.12.6 ALARM STRATEGIES 128
4.12.7 INTERLOCKING STRATEGIES 129
4.12.8 GRAPHIC REPRESENTATION 129
4.12.9 TYPICAL SEQUENCE FLOWCHARTS 130

4.13 INTERMIX TRANSFER (SUMP PUMP) ... 131
4.13.1 GROUP DESCRIPTION ... 131
4.13.2 MODES OF CONTROL ... 131
4.13.3 MODES OF OPERATION ... 131
4.13.4 GROUP FUNCTIONALITY ... 131
4.13.5 DEVICE GROUP AVAILABILITY ... 132
4.13.6 ALARM STRATEGIES ... 132
4.13.7 INTERLOCKING STRATEGIES ... 133
4.13.8 GRAPHIC REPRESENTATION ... 133
4.13.9 TYPICAL SEQUENCE FLOWCHARTS ... 133
4.14 SUMP FLOW CONTROL ... 134
4.14.1 GROUP DESCRIPTION ... 134
4.14.2 MODES OF CONTROL ... 134
4.14.3 MODES OF OPERATION ... 134
4.14.4 GROUP FUNCTIONALITY ... 134
4.14.5 DEVICE GROUP AVAILABILITY ... 134
4.14.6 ALARM STRATEGIES ... 134
4.14.7 INTERLOCKING STRATEGIES ... 134
4.14.8 GRAPHIC REPRESENTATION ... 135
4.15 ELECTRICAL DISTRIBUTION ... 136
4.15.1 GROUP DESCRIPTION ... 136
4.15.2 MODES OF CONTROL ... 136
4.15.3 MODES OF OPERATION ... 136
4.15.4 GROUP FUNCTIONALITY ... 136
4.15.5 DEVICE GROUP AVAILABILITY ... 137
4.15.6 ALARM STRATEGIES ... 138
4.15.7 INTERLOCKING STRATEGIES ... 138
4.15.8 GRAPHIC REPRESENTATION ... 138
4.16 LUBE OIL PUMPS ... 140
4.16.1 GROUP DESCRIPTION ... 140
4.16.2 MODES OF CONTROL ... 140
4.16.3 MODES OF OPERATION ... 140
4.16.4 GROUP FUNCTIONALITY ... 141
4.16.5 DEVICE GROUP AVAILABILITY ... 141
4.16.6 ALARM STRATEGIES ... 141
4.16.7 INTERLOCKING STRATEGIES ... 141
4.16.8 GRAPHIC REPRESENTATION ... 142
4.17 PURGE AIR FANS ... 144
4.17.1 GROUP DESCRIPTION ... 144
4.17.2 MODES OF CONTROL ... 144
4.17.3 MODES OF OPERATION ... 144
4.17.4 GROUP FUNCTIONALITY ... 144
4.17.5 DEVICE GROUP AVAILABILITY ... 145
4.17.6 ALARM STRATEGIES ... 145
4.17.7 INTERLOCKING STRATEGIES ... 145
4.17.8 GRAPHIC REPRESENTATION ... 145
4.18 PRESSURISATION FANS (CONTROL ROOM FANS) ... 147
4.18.1 GROUP DESCRIPTION ... 147
4.18.2 MODES OF CONTROL ... 147
4.18.3 MODES OF OPERATION ... 147
4.18.4 GROUP FUNCTIONALITY ... 147
4.18.5 DEVICE GROUP AVAILABILITY ... 148
4.18.6 ALARM STRATEGIES ... 148
4.18.7 INTERLOCKING STRATEGIES ... 148
4.18.8 GRAPHIC REPRESENTATION ... 148
4.19 INHIBITOR & DRA (DRAG REDUCING AGENTS) INJECTION ... 150
4.19.1 GROUP DESCRIPTION ... 150
4.19.2 MODES OF CONTROL ... 151
4.19.3 MODES OF OPERATION ... 151
4.19.4 GROUP FUNCTIONALITY ... 151
4.19.5 DEVICE GROUP AVAILABILITY ... 152
4.19.6 ALARM STRATEGIES ... 152
4.19.7 INTERLOCKING STRATEGIES ... 152
4.19.8 GRAPHIC REPRESENTATION ... 152
4.20 GENERAL GROUP ... 153
4.20.1 GROUP DESCRIPTION ... 153
4.20.2 PLC I/O INTERFACE ... 153
4.20.3 MODES OF CONTROL ... 154
4.20.4 MODES OF OPERATION ... 154
4.20.5 GROUP FUNCTIONALITY ... 154

4.20.6 DEVICE GROUP AVAILABILITY 154
4.20.7 ALARM STRATEGIES 155
4.20.8 INTERLOCKING STRATEGIES 155
4.20.9 GRAPHIC REPRESENTATION 155
4.21 LP ROUTING DEVICE GROUP - GENERAL 157
4.21.1 GROUP DESCRIPTION 157
4.21.2 MODES OF CONTROL 157
4.21.3 MODES OF OPERATION 157
4.21.4 GROUP FUNCTIONALITY 157
4.21.5 DEVICE GROUP AVAILABILITY 160
4.21.6 ALARM STRATEGIES 160
4.21.7 INTERLOCKING STRATEGIES 161
4.21.8 GRAPHIC REPRESENTATION 161
4.22 LP ROUTING PRODUCT GROUPS 162
4.22.1 TRANSFER METERING CONCEPTS 162
4.22.2 GROUP DESCRIPTION 163
4.22.3 MODES OF CONTROL 164
4.22.4 MODES OF OPERATION 164
4.22.5 GROUP FUNCTIONALITY 165
4.22.6 ROUTE AVAILABILITY 176
4.22.7 ALARM STRATEGIES 176
4.22.8 INTERLOCKING STRATEGIES 176
4.22.9 GRAPHIC REPRESENTATION 177
4.22.10 TYPICAL SEQUENCE FLOWCHARTS & SCHEDULES 178
4.23 ACCUMULATOR TRANSFER 179
4.23.1 GROUP DESCRIPTION 179
4.23.2 GROUP FUNCTIONALITY 180
4.23.3 DEVICE GROUP AVAILABILITY 181
4.23.4 ROUTE AVAILABILITY 182
4.23.5 ALARM STRATEGIES 182
4.23.6 INTERLOCKING STRATEGIES 182
4.23.7 GRAPHIC REPRESENTATIONS 182
4.24 PROVER 183
4.24.1 GROUP DESCRIPTION 183
4.24.2 MODES OF CONTROL 185
4.24.3 MODES OF OPERATION 185
4.24.4 GROUP FUNCTIONALITY 185
4.24.5 DEVICE GROUP AVAILABILITY 189
4.24.6 ALARM STRATEGIES 190
4.24.7 INTERLOCKING STRATEGIES 190
4.24.8 GRAPHIC REPRESENTATIONS 191
4.24.9 TYPICAL SEQUENCE FLOWCHARTS & AVAILABILITY SCHEDULES 192
4.25 ROAD AND RAIL TANKER LOADING/OFFLOADING 193
4.25.1 GROUP DESCRIPTION 193
4.25.2 MODES OF CONTROL 193
4.25.3 MODES OF OPERATION 193
4.25.4 GROUP FUNCTIONALITY 193
4.25.5 ALARM STRATEGIES 195
4.25.6 INTERLOCKING STRATEGIES 195
4.26 TANK FARM 196
4.26.1 GROUP DESCRIPTION 196
4.26.2 MODES OF CONTROL 197
4.26.3 MODES OF OPERATION 197
4.26.4 GROUP FUNCTIONALITY 197
4.26.5 DEVICE GROUP AVAILABILITY 200
4.26.6 ALARM STRATEGIES 200
4.26.7 INTERLOCKING STRATEGIES 200
4.26.8 GRAPHIC REPRESENTATION 200
4.27 INTERMIX BLEND CONTROL 201
4.27.1 GROUP DESCRIPTION 201
4.27.2 MODES OF CONTROL 201
4.27.3 MODES OF OPERATION 201
4.27.4 GROUP FUNCTIONALITY 202
4.27.5 DEVICE GROUP AVAILABILITY 208
4.27.6 ALARM STRATEGIES 209
4.27.7 INTERLOCKING STRATEGIES 209
4.27.8 GRAPHIC REPRESENTATION 209
4.27.9 TYPICAL BLEND SEQUENCE FLOWCHARTS 210
5 LINE SEQUENCES – MASTER CONTROL CENTRE 211

5.1 INTRODUCTION 211
5.2 OPERATING CONCEPT 211
5.2.1 SEQUENCE START-UP 211
5.2.2 FLOW CONTROL 212
5.2.3 SEQUENCE SHUTDOWN 212
5.2.4 EMERGENCY SHUTDOWN 213
6 OPERATIONAL REPORTING REQUIREMENTS 214
6.1 INTRODUCTION 214
6.2 GENERAL OPERATIONAL REPORTS – PUMP STATIONS 215
6.2.1 HOURLY REPORTS 215
6.2.2 TRANSMIX REPORTS 219
6.2.3 INTERMIXTURE BLENDED AND TRANSMIXES TAKEN OFF REPORTS 220
6.2.4 TRANSMIX AND INTERMIXTURE HANDLED 221
6.2.5 HIGH DISCHARGE REPORTS 222
6.2.6 LOW INCOMING PRESSURE (ICP) REPORT 222
6.2.7 PUMP REPORTS 222
6.2.8 WEEKLY INTERMIXTURE TANK AND ACCUMULATOR TANK REPORTS 223
6.3 GENERAL OPERATIONAL REPORTS – MASTER CONTROL CENTRE 226
6.3.1 DAILY STATEMENT / OPERATIONS NOTICE 226
6.3.2 WEEKLY STATEMENT 227
6.3.3 MONTHLY STATEMENT 227
6.3.4 BI-ANNUAL STATEMENT 227
6.3.5 ANNUAL STATEMENT 227
6.3.6 PIPELINE SHUTDOWN REPORT 227
6.3.7 PIPELINE LOG SHEETS 228
6.4 OPERATIONAL REPORTS – SPECIFIC PUMP STATIONS 229
6.4.1 INTERMIX REFRACTIONATOR PLANT 229

1 INTRODUCTION

1.1 GENERAL

The objective of this Standard is to establish the requirements that shall be fulfilled in the design of a control system for the automation of Transnet Pipeline's Pipeline Network.

This Automation Standard has been updated to incorporate Control and Automation concepts to be implemented on Control Systems installed within the TPL Pipeline infrastructure post 2008. Automation Standard Rev 2.1 and prior versions covers Control and Automation concepts implemented on Control Systems installed within the TPL Pipeline infrastructure pre 2008.

Implementation of these requirements on the various control systems installed within the TPL Pipeline Infrastructure are detailed within the following Functional Design Specifications:

PL 723-1	LSX Automation Engineering Design Specification
PL 723-2	PCS 7 Automation Engineering Design Specification

1.2 PROCESS CONTROL OVERVIEW

Pump Stations (or outstations as they are often referred to) are located at various points along the various pipelines owned and operated by Transnet Pipelines and consist of the following types:

1.2.1 INTAKE STATIONS

These stations are used to introduce product into the pipelines and as such are fed from client storage facilities via dedicated feeder lines. In order to accurately meter the volume of product intake as well as to establish the quality of product taken in (used to establish both accurate mass balances as well as percentage product degradation during product transfer), the volume of product received is metered to API Standards.
Spheres and pigs may be introduced into the line for the purposes of cleaning of the pipeline or separation of products. Pressure head is provided by means of multiple stage mainline pump and motor sets.

1.2.2 PUMP STATIONS

These pump stations are used to maintain pressure head and each station consists of multiple stage centrifugal mainline pump and motor sets.
Depending on pressure head requirements and in order to optimise both flow and pressure requirements, various combinations of stages are run, usually with stages in reserve/backup should a pump set fail.

Facilities included at these pump stations also include receivers to remove spheres from the pipelines prior to product entering the mainline pump sets, launchers to re-introduce spheres into the pipelines after the mainline pump sets in order to separate products, density monitoring facilities to enable accurate sphere launch/transmix control and Intermixture injection facilities to enable the injection of sump tank contents back into the mainlines.

1.2.3 DELIVERY STATIONS

These stations are used to deliver product to clients at various stages along the pipelines, via dedicated consignee feeder lines. To accurately establish the volume of product delivered, the volume is metered to API Standards, being affected via interface to a Flow Computer metering system.

Facilities at these delivery stations include intermix tank storage and blending facilities to enable the re-introduction of intermixture from the intermix tanks back into the manifold as well as storage facilities in the form of accumulator tanks. Introduction of intermixture (consisting of transmix product) is to be accurately controlled in order to ensure that the quality of product being transferred is not downgraded to fall outside of pre-arranged target set points.

1.2.4 TERMINAL FACILITIES

Terminals receive, distribute and accumulate multiple products, usually on a per grade basis. Products are usually custody transfer metered into Tankage. Tank Overfill Protection is provided in accordance with "Safety and Environmental Standards for Fuel Storage Sites – Final Report' as compiled by the Buncefield Standards Task Group dated 24 July 2007 and API 2350 recommendations.

Product distribution out of the product dedicated accumulator tanks is accomplished by accumulator / booster pumps, the purpose of which is to increase the product pressure to an acceptable inlet pressure required by the mainline pumps.

1.2.5 REMOTE BLOCK VALVE CHAMBERS

MBV Valve chambers are located along pipeline infrastructure between pump stations and are used to isolate pipelines for maintenance and shutdown purposes. Pressure and temperature instrumentation installed in these chambers form an integral part of Pipeline Monitoring Systems (Batch Tracking and Leak Detection) installed.
These sites are in most cases remote from stable power supplies, regular maintenance and operational teams. All Automation and Communications equipment at MBV chambers are backed up via UPS equipment, to increase the availability of the pipeline process control signals transmitted to the Control System during local power failure conditions.

1.2.6 TELECONTROL FACILITIES

The following facilities are available at the remote stations and are monitored and/or controlled from the master control centre. It should be noted that telecontrol facilities are divided into two categories: facilities concerned with high pressure manifold control and product transfer and those facilities concerned with low pressure manifold control and product intake or delivery.

Detailed Functional Design Specifications detailing the control methodology to be adopted in controlling these facilities/devices have been included in this Automation Standard.

1.2.6.1 Mainline Pump and Motor Sets (HP Manifold)

These mainline pump and motor sets consist of multiple stage centrifugal pump and motor sets and are used to introduce additional pressure head into the pipeline.

Control of the mainline pump and motor sets requires interface and control of not only the pump set itself but also the suction/inlet valve (hand operated), bypass and outlet/discharge

valves (motorised actuated). Indication of pump suction and discharge pressure is achieved via means of pressure transmitters installed on the pump inlet and outlet lines respectively.

1.2.6.2 Receivers (HP Manifold)

Receivers are used to remove incoming spheres and pigs from the pipeline and comprise mechanically of a receiving barrel, kicker and bypass line. The receiver is placed on and off line by means of control system interface to effect control of the inlet, discharge and bypass valves (motorised actuated).

Imminent arrival and receipt of incoming spheres and pigs are indicated by sphere detector switches mounted remotely on the pipeline and locally on the receiver barrel, with the pressurisation of the receiver being indicated by low and high level switches mounted on the receiver itself.

Draining and filling of the receiver is required to be performed manually.

1.2.6.3 Launchers (HP Manifold)

Launchers are used to introduce spheres, batching pigs and scraper pigs into the pipeline and mechanically consist of a launcher barrel, magazine, kicker and bypass line and an open cage basket valve for release of spheres into the main flow path.

The launcher is placed on and off line by means of control of the inlet, discharge and bypass valves (motorised actuated), via interface to the control system.

A sphere detector switch located downstream of the launcher discharge valve indicates successful launching of spheres. Primed status of the launcher is indicated by feedback from low and high level switches mounted on the launcher barrel and magazine respectively.

Draining and filling of the launcher is required to be manually done.

1.2.6.4 Sump Injection Facilities (HP Manifold)

Intermixture injection facilities at the remote stations comprise of sump tanks, used to collect product from sources typically when the receiver and launchers are drained of product or for maintenance purposes, and injection facilities used to re-introduce product back into the line.

Sump injection may be controlled by means of an injector and venturi, with intermixture flow rate being controlled indirectly using a control valve (motorised actuated) located in the high pressure line, upstream of the venturi (controlling differential pressure across the venturi and hence the intermixture flow rate).

At some stations the sump injection is implemented by pumping the product via sump pump through the sump injection valve into the mainline.

1.2.6.5 Interface Handling Control Facilities (HP Manifold)

Interface Handling control facilities at remote stations comprise of instrumentation located on the pipeline as follows: -

- Remotely upstream of the station, in order to indicate the imminent arrival of an interface.
- Locally on the manifold, in order to give the operator a continuous indication of product quality in order to assist in sphere launching and interface control.
- Locally after the launcher in order to indicate quality of product leaving the station.

Launch control facilities in the form of a density hut, hydrometer and launch control panel are also provided in order that the operator may perform manual launching.

1.2.6.6 Lube Oil Facilities.

Associated with the operation of some mainline pump and motor sets, forced lube oil control may be required in order to provide a steady flow of lubrication oil to the pump and motor bearings.

1.2.6.7 Purge Air Facilities.

Associated with the operation of some mainline motors, purge air control may be required in order to comply with safety regulations and cooling requirements.

1.2.6.8 Pressurisation Facilities.

Associated with the operation of some remote stations, purging and pressurisation of control rooms may be required in order to comply with Hazardous Area safety regulations.

1.2.6.9 Delivery Facilities (LP Manifold)

Delivery of product to a client is achieved via control system interface to both a delivery manifold and metering system, with the flow rate being controlled by a flow control valve located upstream of the delivery manifold.

1.2.6.10 Intake Facilities (LP Manifold)

Intake of product from a client is achieved via control system interface to both an intake manifold and metering system, with the flow rate being controlled by a flow control valve located downstream of the intake manifold.

1.2.6.11 Prover Loop Facilities (LP Manifold)

Prover loop facilities at delivery and intake stations are utilised to accurately establish meter factors to be used in the metering of product, to API Standards.

Control of the Prover loop operation consists of the transfer of a fixed volume of metered product, for a specified number of cycles in order to establish a meter factor.

Facilities to fill and empty the Prover may be provided and consist of dedicated transfer tanks, transfer pumps and associated inlet and outlet piping. Control of the filling and draining of Provers may be effected by interface to the control system requiring the automatic control of all associated inlet and outlet valves, as well as the continuous level measurement of the transfer tanks.

1.2.6.12 Intermixture Handling Facilities (LP Manifold)

Intermixture handling and injection facilities at the remote stations may comprise of intermix tanks used to accumulate intermix product as well as PLC measurement and pumping facilities used to re-introduce product back into the line.

Accurate control of intermixture blending into product being delivered is required in order to ensure that the product is not delivered out of specification.

Tanker Loading facilities may also be provided to transfer product to the IRP Plant (Refractionator).

1.2.6.13 Accumulator Tank Facilities (LP Manifold)

Accumulator Tank facilities in the form of dedicated accumulator tanks are provided at some delivery/intake stations for the purposes of accumulating product. Facilities may include

transfer pumps, inlet and outlet valves (motorised actuators), level measurement and independent overfill protection systems.

Product transfer to and from accumulator tanks is considered to form part of consignee deliveries and is thus metered to API Standards.

1.2.6.14 Booster Pump Spillback Control facilities

Booster may require minimum flow spillback facilities, to ensure minimum flow requirements. These facilities may also be used for inter-tank transfer.

1.3 ABBREVIATIONS

SCADA	Supervisory Control and Data Acquisition
MDS	Metering Database System.
PLC	Programmable Logic Controllers.
HP	High Pressure
LP	Low Pressure.
FC	Flow Computer.
MCC	Master Control Centre.
OMS	Operations Management System (Transnet Pipelines)
S5	SIMATIC S5 Automation equipment
S7	SIMATIC S7 Automation equipment
EDS	Engineering Design Specification
API	American Petroleum Institute
LDS	Leak detection System
BTM	Batch Tracking Module

1.4 REFERENCES

1. Transnet Pipelines Metering Standard PL 709
2. µ5000 Metering Functional Design Specification PL 709-1
3. S600 Metering Engineering Design Specification PL 709-2
4. Transnet Pipelines MC&I Policy Rev 1.0
5. API Manual of Petroleum Measurement Standards
6. Custody Transfer Metering Functional Design Specification G52001-W4000-U200
7. Recommendations on the Design and Operation of Fuel Storage sites – Buncefield Major Incident and Investigation Board dated July 2007.
8. "Safety and Environmental Standards for Fuel Storage Sites – Final Report' as compiled by the Buncefield Standards Task Group dated 24 July 2007

2 CONTROL AND OPERATING PHILOSOPHY

2.1 DEFINITIONS

2.1.1 DEVICE

Devices are defined as any field equipment, inclusive of valves, pumps, motors and instrumentation that are monitored / controlled by the PLC System.

2.1.1.1 Device Fault

A Device Fault is defined as any condition prohibiting control from the PLC System (e.g. wire break, thermal overload, control error).

2.1.1.2 Device Available

A device is defined as being Available if the device is not in local and has no fault condition.

2.1.2 DEVICE GROUP

A Device Group is defined as a collection of devices, grouped both logically and functionally for the purposes of control and monitoring e.g. Receivers, Launchers. Note that Control Sequences (e.g. Start-up, Shutdown, On-line and Off-line) are unique to individual Device Groups.

2.1.2.1 Group Available

A device group is defined as being Available when all devices associated with a group are available and all associated process conditions are healthy (e.g. hand valves in the correct positions and vessels at correct levels).
Group availability is indicated on the group name banner. If the banner is green the group is available and if yellow the group is not available.

2.1.2.2 Group Ready

A device group is defined as being Ready when the device group is available and in automatic mode of operation. If the group is not ready, associated sequences cannot be controlled.

2.1.2.3 Group Fault

A device group is defined as being in a Fault condition when any of the devices in that group are in a fault condition. Fault conditions may activate offline sequences for groups where required.

2.1.3 MODES OF OPERATION

2.1.3.1 Local

In this mode, control of a Device occurs either from the device itself (in the case of valve actuators) or from Starter Panels in the Switchgear Room (in the case of Motors). Note that although Control Action from the PLC is ignored in this mode, hard-wired interlock functionality remains enabled (e.g. Pump Switchgear Trips, etc.). The PLC still monitors and indicates the status of the devices in local.

2.1.3.2 Manual

In this mode, control of a Device occurs from the SCADA System (both in SCADA and TELE modes of control). Note that when in manual mode of operation, direct control of the device will be permissible with responsibility for control of the Plant resting with the Operator.

Hard wired and PLC Interlocking shall be active in this mode.

Responsibility for selecting Control Modes of Operation (MAN/AUTO) for Device Groups shall remain the responsibility of the Operator who is in control of the Group i.e. a Group will remain in MANUAL Mode until the Operator changes to AUTOMATIC Mode and vice versa.

2.1.3.3 Automatic

In this mode, device groups are controlled by the PLC via control sequences initiated via the SCADA (both in SCADA and TELE modes of control).

Responsibility for selecting Control Modes of Operation (MAN/AUTO) for Device Groups shall remain the responsibility of the Operator who is in control of the Group is, i.e. a Group will remain in AUTOMATIC Mode until the Operator changes to MANUAL Mode and vice versa.

2.1.4 MODES OF CONTROL

Three modes of control are defined as follows:

2.1.4.1 STATION

This is defined as the mode in which control requests to the Control System PLC's can only be issued from the local Control System situated at the remote station itself. All control requests emanating from sources other than the local Control System (e.g. control commands as issued from the either Master Control Centre MCC or Secondary Control Centre SCC) will be ignored.

2.1.4.2 MCC

This is defined as the mode in which control requests to the Control System PLC's can only be issued from the Control System situated at the Master Control Centre in Durban. All requests emanating from sources other than from the MCC (i.e. local Control System or Secondary Control Centre SCC) will be ignored.

Note that in this document all references to Master Control Centre will apply to the Secondary Control Centre as well, unless expressly stipulated otherwise in the text.

2.1.4.3 SCC

This is defined as the mode in which control requests to the Control System PLC's can only be issued from the CONTROL System situated at the Secondary Control Centre. All requests emanating from sources other than from the SCC (i.e. local CONTROL System or Master Control Centre MCC) will be ignored.

2.1.5 PRIMARY ROUTE

Primary route is defined as the first delivery/intake route selected for a product.

2.1.6 TRANSITION ROUTE

Transition route is defined as the second delivery/intake route selected for a product. Transition occurs when the delivery/intake route is switched from the primary to the transition route.

2.1.7 INTERLOCKS

2.1.7.1 Hard wired interlocks

Hard-wired Interlocks are defined as interlocks, which are physically wired and due to safety reasons, may not be overridden. Hard-wired Interlock functionality remains active in all modes of operation i.e. automatic, manual and local.

2.1.7.2 PLC Interlocks

PLC Interlocks are defined as interlocks, which are programmed in the PLC and due to safety reasons, may not be overridden e.g. tank inlet valve is interlocked closed on activation of a high level switch. All PLC Interlock functionality remains active in both manual and automatic modes of operation i.e. not in local. Motor Protection trips remain active in local, manual and automatic modes of operation.

Two types of interlocks have been defined as follows:

TRIP is a non-latched interlock within the PLC that returns a device to a pre-defined safe state and permits control of the device thereafter (e.g. All Motor Protection Trips). A trip condition is indicated on the control system graphic by means of a flashing red device symbol and is only active within an associated device group i.e. never across device groups.

INTERLOCK is a latched interlock within the PLC that returns a device to a pre-determined safe state and holds the device in that state until the condition that caused the interlock has been removed (e.g. associated control valve is closed on tank high level). An interlock condition is indicated on the control system graphic by means of a purple border around the device being interlocked and may be active both within and across device groups.

2.1.7.3 Safety Instrumented Function interlocks

Safety Instrumented Function interlocks are safety interlocks that are defined with Safety Integrity levels of SIL 1 and greater, and are implemented using adequately rated Safety Instrumented Systems, independently from the Control System. SIF Interlock functionality remains active in all modes of operation i.e. automatic, manual and local.

3 DEVICE TYPICALS

3.1 STATION/MCC/SCC

3.1.1 DESCRIPTION

It is possible to access and control different groups from three different locations i.e. Master Control Centre, Secondary Control Centre and the Control room on the local station. This access selection is done via the STATION/MCC/SCC typical.

For safety reasons, it shall only be possible to alter the Control Mode of a device group (STATION/MCC/SCC) from the system at which the Control Mode is enabled. This ensures that responsibility for mode changes as well as for Plant Operation remains with the Operational staff in whose Mode the Group is placed.

Global handover for all HP and LP device groups associated with a Station may be achieved by accessing the STATION/MCC/SCC button located on the HP and LP Overview Graphics respectively, on any of the Control Systems.

In the event of an emergency (e.g. a loss of communications with the MCC) it shall be possible to take control of all Device Groups at the local Station. This is done by forcing the device groups to STATION control (password protected) either individually or globally.

3.1.2 PLC I/O SIGNALS

None.

3.1.3 CONTROL METHODOLOGY

To transfer the control of groups between STATION, MCC or SCC the operator who wishes to take control will issue a command which has to be acknowledged by the operator who has control before control will pass from one to the other.
If a request is issued and is not acknowledged within a configurable time the mode will remain unchanged and an appropriate message displayed.

This typical is defined at a Device Group level and it is thus possible on a single remote station to have Device Groups in different control modes i.e. STATION, MCC or SCC.

3.1.4 POWER FAILURE

After a power failure or cold restart of the PLC, all the groups will default to MCC control.

3.1.5 SCADA REPRESENTATION

Control System dependant – refer to LSX and PCS7 Typicals.

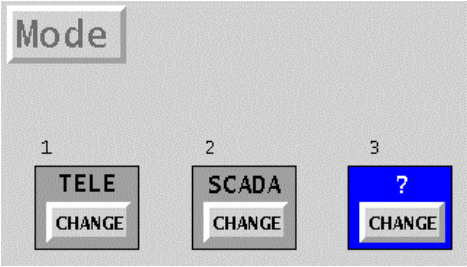
Mode
1
TELE
CHANGE
2
SCADA
CHANGE
3
?
CHANGE

3.2 AUTO / MANUAL

3.2.1 DESCRIPTION

All stations are divided into device groups, which can be selected to either Automatic or Manual mode of operation.

3.2.2 PLC I/O SIGNALS

None

3.2.3 CONTROL METHODOLOGY

The Operator will issue a command to transfer control of the group from Auto to Manual or vice versa and this transfer from one mode to another shall be bump-less i.e. no device within the device group shall change state.

This mode is defined at device group level and therefore it is possible on a single remote station to have device groups in different modes of operation i.e. Auto or Manual.

3.2.4 POWER FAILURE

After a power failure or cold restart of the PLC, all the groups will default to AUTO mode.

3.2.5 SCADA REPRESENTATION

Control System dependant – refer to LSX and PCS7 Typicals.

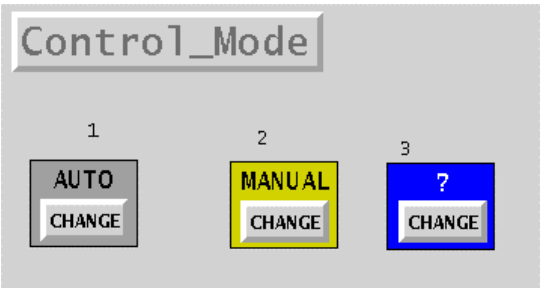

3.3 VALVES

3.3.1 DESCRIPTION

3.3.1.1 Actuated Valves

Actuated valves are used to control the flow of product and / or to isolate between products or functions. All actuated valves can be operated via the SCADA interface i.e. opened and closed from the control room/MCC. Valve Operation shall be reversible in mid travel condition; e.g. it shall be possible to reverse the action of a valve before the valve has reached the end stop position.

3.3.1.2 Hand Valves with Position Feedback (ZV)

Position feedback is used on hand valves, which can block the main flow of product, and for interlocking and indication purposes.

The Device Typicals for hand valves with position feedback are similar to that of actuated valve typicals with the following exceptions:

- Control commands are not permitted and hence control errors are not possible
- Local indication is not displayed

Note that Wire Break Indication is active.

3.3.1.3 Hand Valves without Position Feedback (Pseudo valves)

The operator must open and close these hand valves locally and then enter the position of the valve on the SCADA for indication/interlocking purposes.

The Device Typicals for hand valves without position feedback are similar to that of actuated valve typicals with the following exceptions:

- Control commands are directly coupled to the valve status
- Local indication is not displayed
- Wire Break Indication is not active.

3.3.2 PLC I/O SIGNALS

PLC I/O signals are as follows:

Digital Outputs (**only actuated valves)**
Open Valve request (O) Permanent high while not Valve Close FB
Close Valve request (C) Permanent high while not Valve Open FB
Only one output signal per valve will be active at any time and reversible in mid travel.

Digital Inputs
Valve Open Feedback (OP)
Valve Close Feedback (CL)
Valve Remote Feedback (SL)

Status	PLC Valve Open Feedback	PLC Valve Close Feedback	Local Feedback

Loss of feedback / wire break	0	0	X
Valve Open	0	1	X
Valve Close	1	0	X
Valve in Mid Travel/ opening/closing	1	1	X
Valve in Local			0
Valve in Remote			1

3.3.3 CONTROL METHODOLOGY – ON/OFF VALVE

PLC control of actuated valves may be performed in either Manual or Automatic modes of operation.

In Manual the valve is controlled by the operator via the SCADA interface and therefore assumes responsibility. When in Automatic mode of control, the valve is controlled by pre-programmed sequences. These sequences will be dealt with later in this document.

When the OPEN command is issued, the valve will proceed to open and display an "opening" status on the SCADA until the open limit has been reached. The SCADA status will then change to "open".
When the CLOSE command is issued, the valve will proceed to close and display a "closing" status on the SCADA until the close limit has been reached. The SCADA status will then change to "closed".

On receipt of a command, the relevant output will stay high until the required feedback or control error is received. Valve direction may be changed in mid travel by issuing another command from the SCADA.

The valve position indicated on the SCADA is determined by the feedback status of the limit switches located in the actuator.

Should the valve be placed in LOCAL the Device status will indicate a LOCAL status on the SCADA, by means of a yellow border around the symbol. Transfer of a Device either from LOCAL to REMOTE or visa versa shall be bumpless i.e. the device shall not change state.

3.3.3.1 CONTROL ERROR

A CONTROL_ERROR will be generated when the actuator is in REMOTE Mode of operation, under the following circumstances:

- If a command is issued and the valve does not leave the original position after a configurable time delay (in the PLC)
- If a command is issued and the valve does not reach the opposite position after a configurable time delay (in the PLC)
- If the actuator feedback changes without a command being issued.

Note:
1. If the valve direction is changed during mid-travel, the monitoring time will be reinitiated and the valve will move in the new direction.
2. A control error is not generated in local mode.
3. A control error is cleared if:

- Local selected
- Any control command is issued
- The control error alarm is acknowledged

3.3.3.2 WIREBREAK

A WIRE_BREAK status will be displayed if both feedbacks are lost "0", regardless of all other commands and conditions.

3.3.3.3 SELECTION

For all valves associated with LP Manifold Routes, SELECTION indicates whether the valve has been selected for Primary Route, Transition Route or both.

These valves may be selected for routing of product and will display the letters "P", "T", or "B" depending on the selection. i.e.
Primary route selection - "P"
Transition route selection - "T"
Primary and Transition selection - "B"
All valves forming part of the primary route only, will have the character "P" displayed; all valves forming part of the transition route only will have the character "T" displayed, and those valves forming part of both the primary and transition route will have the character "B" displayed.

3.3.3.4 NOT CONTROLLABLE

In the event that a Device Group is in automatic and an associated actuator in remote, a Not Controllable status will be issued when attempting to control the actuator in manual. In the event that a Device Group is in manual and an associated actuator in remote, a Not Controllable status will be issued when attempting to control the actuator in automatic. Note that the output will not be affected. In the event that an actuator is in local, no Not Controllable status will be issued.

3.3.3.5 PLC INTERLOCKS

When a valve is required to be in a specific state or PLC Interlocks are active, an "interlock" facility is available for this purpose. This will interlock the valve into the desired position. The operator cannot change the status of the valve in this condition. The Interlock command is not active in Local mode.

Should the Device be interlocked, the Device status will indicate INTERLOCKED by means of a purple border around the object.

3.3.4 CONTROL METHODOLOGY – PROVER 4 WAY VALVE

Control of the Prover 4 way valve may be initiated either from the s600 Flow Computer (if placed in FC CONTROL mode) or from the PLC (if placed in PLC CONTROL mode). If placed in FC CONTROL mode, the FC issues forward and reverse commands to the PLC to execute, whereas in PLC CONTROL, the operator initiates control via the SCADA interface and therefore assumes responsibility. Note that in both modes of operation, the PLC issues control commands to the valve.

When the FORWARD command is issued, the valve will proceed to open and display a "forwarding" status on the SCADA until the forward limit has been reached. The SCADA status will then change to "forward".
When the REVERSE command is issued, the valve will proceed to close and display a "reversing" status on the SCADA until the reverse limit has been reached. The SCADA status will then change to "reversed".

On receipt of a command, the relevant output will stay high until the required feedback or control error is received. Valve direction may be changed in mid travel by issuing another command from either the SCADA (in PLC CONTROL mode) or FC (in FC CONTROL mode).

A valve timeout alarm is raised if the valve position inputs do not reflect the required position within a configurable timeout period. Four way valve timeout will be initiated from the FC when in FC CONTROL mode, and from the PLC in PLC CONTROL mode. The timer is activated when the command is issued. No timeout will exist when the valve is placed in LOCAL.

In PLC CONTROL MODE, the PLC will monitor the valve operation and raise a valve status alarm if the 4-way valve fails during operation.

Note that if a proof is initiated when the 4 Way Valve is in LOCAL and PLC CONTROL mode, the prove sequence will wait indefinitely for the valve to attain the correct position before continuing with the prove sequence.

The valve position indicated on the SCADA is determined by the feedback status of the limit switches located in the actuator.

Should the valve be placed in LOCAL the Device status will indicate a LOCAL status on the SCADA, by means of a yellow border around the symbol. Transfer of a Device either from LOCAL to REMOTE or visa versa shall be bumpless i.e. the device shall not change state.

If the 4-way valve is in FC CONTROL mode a purple border is displayed around the valve symbol on the Control System.

3.3.4.1 CONTROL ERROR

A CONTROL_ERROR will be generated within the Control System when the actuator is in PLC CONTROL Mode of operation, under the following circumstances:

- If a command is issued and the valve does not leave the original position after a configurable time delay (in the PLC)
- If a command is issued and the valve does not reach the opposite position after a configurable time delay (in the PLC)
- If the actuator feedback changes without a command being issued.

Note:
1. If the valve direction is changed during mid-travel, the monitoring time will be reinitiated and the valve will move in the new direction.
2. A control error is not generated in local mode.
3. A control error is cleared if:

- Local selected
- Any control command is issued
- The control error alarm is acknowledged.

3.3.4.2 WIREBREAK

A WIRE_BREAK status will be displayed if both feedbacks are lost "0", regardless of all other commands and conditions.

3.3.4.3 SELECTION

In the case of the Prover 4 Way valve, SELECTION indicates the mode in which the FC has been placed e.g. FC CONTROL or PLC CONTROL. FC CONTROL mode is issued to the S600 FC by means of an active input. When in FC CONTROL, the FC issues control commands to the PLC to execute. When in PLC CONTROL, the PLC issues control commands to execute.

3.3.4.4 NOT CONTROLLABLE

In the event that a Device Group is in FC CONTROL mode and an associated actuator in remote, a Not Controllable status will be issued when attempting to control the actuator in manual. In the event that a Device Group is in PLC CONTROL mode and an associated actuator in remote, a Not Controllable status will be issued when attempting to control the actuator in automatic. Note that the output will not be affected. In the event that an actuator is in local, no Not Controllable status will be issued.

3.3.4.5 PLC INTERLOCKS

Not Required.

3.3.5 CONTROL METHODOLOGY – PROVER BORSIG VALVE/RAM

Control of the Prover valve/RAM may be initiated either from the s600 Flow Computer (if placed in FC CONTROL mode) or from the PLC (if placed in PLC CONTROL mode). If placed in FC CONTROL mode, the FC issues forward and reverse commands to the PLC to execute, whereas in PLC CONTROL, the operator initiates control via the SCADA interface and therefore assumes responsibility. Note that in both modes of operation, the PLC issues control commands to the valve/RAM.

When the PROVE command is issued, the valve/RAM will proceed to move to the prove position and displays a "proving" status on the SCADA until the prove limit has been reached. The SCADA status will then change to "prove".
When the RECEIVE command is issued, the valve will proceed to move to the receive position and displays a "receiving" status on the SCADA until the receive limit has been reached. The SCADA status will then change to "receive".
When the UNLOAD command is issued, the valve will proceed to move to the unload position and displays a "proving" status on the SCADA until the unload limit has been reached. The SCADA status will then change to "unload".

On receipt of a command, the relevant output will stay high until the required feedback or control error is received. Valve/RAM direction may be changed in mid travel by issuing another command from either the SCADA (in PLC CONTROL mode) or FC (in FC CONTROL mode).

A valve/RAM timeout alarm is raised if the valve/RAM position inputs do not reflect the required position within a configurable timeout period. Valve/RAM timeout will be initiated from the FC when in FC CONTROL mode, and from the PLC in PLC CONTROL mode. The timer is activated when the command is issued. No timeout will exist when the valve/RAM is placed in LOCAL.

In PLC CONTROL MODE, the PLC will monitor the valve/RAM operation and raise a valve/RAM status alarm if the valve/RAM fails during operation.

Note that if a proof is initiated when the Valve/RAM is in LOCAL and PLC CONTROL mode, the prove sequence will wait indefinitely for the valve/RAM to attain the correct position before continuing with the prove sequence.

The valve/RAM position indicated on the SCADA is determined by the feedback status of the limit switches located in the actuator.

Should the valve/RAM be placed in LOCAL the Device status will indicate a LOCAL status on the SCADA, by means of a yellow border around the symbol. Transfer of a Device either from LOCAL to REMOTE or visa versa shall be bumpless i.e. the device shall not change state.

If the valve/RAM is in FC CONTROL mode a purple border is displayed around the valve symbol on the Control System.

3.3.5.1 CONTROL ERROR

A CONTROL_ERROR will be generated within the Control System when the valve/RAM actuator is in PLC CONTROL Mode of operation, under the following circumstances:

- If a command is issued and the valve/RAM does not leave the original position after a configurable time delay (in the PLC)
- If a command is issued and the valve/RAM does not reach the opposite position after a configurable time delay (in the PLC)
- If the actuator feedback changes without a command being issued.

Note:

1. If the valve/RAM direction is changed during mid-travel, the monitoring time will be reinitiated and the valve will move in the new direction.
2. A control error is not generated in local mode.
3. A control error is cleared if:
    - Local selected
    - Any control command is issued
    - The control error alarm is acknowledged.

3.3.5.2 WIREBREAK

A WIRE_BREAK status will be displayed if both feedbacks are lost “0”, regardless of all other commands and conditions.

3.3.5.3 SELECTION

In the case of the Prover valve/RAM, SELECTION indicates the mode in which the FC has been placed e.g. FC CONTROL or PLC CONTROL. FC CONTROL mode is issued to the S600 FC by means of an active input. When in FC CONTROL, the FC issues control

commands to the PLC to execute. When in PLC CONTROL, the PLC issues control commands to execute.

3.3.5.4 NOT CONTROLLABLE

In the event that a Device Group is in FC CONTROL mode and an associated actuator in remote, a Not Controllable status will be issued when attempting to control the actuator in manual. In the event that a Device Group is in PLC CONTROL mode and an associated actuator in remote, a Not Controllable status will be issued when attempting to control the actuator in automatic. Note that the output will not be affected. In the event that an actuator is in local, no Not Controllable status will be issued.

3.3.5.5 PLC INTERLOCKS

Not Required.

3.3.6 POWER FAILURE

In the event of a loss of power to the actuator, the actuator will remain in its current position and a local indication is displayed.

When a power failure occurs causing the PLC to restart, all outputs are reset and the valve will remain in its current position.

3.3.7 SCADA REPRESENTATION

Control System dependant – refer to LSX and PCS7 Typicals.

The Colours on the valve are determined according to the following table.

←Priority	CONDITION				
	Open	**Close**	**Opening**	**Closing**	**Implausible**
Control Error	Green Blinking	Red Blinking	Green Border Blinking	Red Border Blinking	Blue Blinking
Wire Break	Blue Blinking	Blue Blinking	Blue Blinking	Blue Blinking	Blue Blinking
Not Controllable	Blue Blinking	Blue Blinking	Blue Blinking	Blue Blinking	Blue Blinking
Hard Interlock	Blue Blinking	Blue Blinking	Blue Blinking	Blue Blinking	Blue Blinking
Normal	Solid Green	Solid Red	Green Border	Red Border	Blue Blinking

Actuated Valve

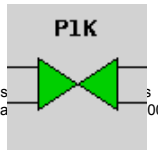

Pseudo Valve and Proximity valve

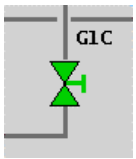

3.4 CONTROL VALVES (NON MODULATING)

3.4.1 DESCRIPTION

Non Modulating Control valves operate the same as an actuated valve except that the open and close outputs are pulsed until the required position is reached. This position could be anywhere between the open and close limits. A 4-20mA signal from the valve indicates the actual position feedback.

3.4.2 PLC I/O SIGNALS

Digital Outputs
Pulsed digital output "Open Valve Request" while not "Valve Open Feedback"
Pulsed digital output "Close Valve Request" while not "Valve Close Feedback"

Only one output signal per valve will be active at any time and reversible in mid travel.

Digital Inputs:
Valve Open Feedback
Valve Close Feedback
Valve Remote Feedback

Analogue Inputs:
Valve position feedback

Status	PLC Valve Open Feedback	PLC Valve Close Feedback	Local Feedback
Loss of feedback / wire break	0	0	X
Valve Open	0	1	X
Valve Close	1	0	X
Valve in Mid Travel/ opening/closing	1	1	X
Valve in Local			0
Valve in Remote			1

3.4.3 CONTROL METHODOLOGY

PLC control of actuated valves may be performed in either Manual or Automatic modes of operation.

Manual
In manual the valve is controlled by the operator via the SCADA interface and therefore assumes responsibility. The actual valve position will depend on the valve position set point value (0 – 100%) entered by the operator on the SCADA.

Automatic
When the valve is in automatic, control is only permissible by the software within the PLC. The actual valve position is now determined by the measured variable of the PID controller.

The valve can be inched, stepped or fully opened or closed.
Full - output active until feedback received

Step - output pulsed high for x seconds (long time set during commissioning)
Inch - output pulsed high for y seconds (short time set during commissioning)

An analogue input is used to indicate the current valve position (0 – 100%). Note that 100% means that the valve is fully closed and 0% is fully open.

The valve position indicated on the SCADA is determined by the feedback status of the limit switches located in the actuator. Opening and Closing status will be transmitted to the SCADA, with a configurable deadband and configurable resolution (default of 1%) in order to reduce loading on message channels.

Full
When the operator issues the full open command, the open command is high and the valve will proceed to open until the open limit has been reached. The SCADA status will then change to "open".
When the operator issues the full close command, the close command is high and the valve will proceed to close until the close limit has been reached. The SCADA status will then change to "closed".
Valve direction may be changed in mid travel by issuing the opposite command from the SCADA.

Inch/step
When the operator issues the step or inch open command, the open command is pulsed and the valve will proceed to open for as long as the output is on. As soon as the output is switched off a "stopped" indication is displayed. If the open limit has been reached the SCADA status will then change to "open".
When the operator issues the step or inch open command, the close command is pulsed and the valve will proceed to close for as long as the output is on. As soon as the output is switched off a "stopped" indication is displayed. If the close limit has been reached the SCADA status will then change to "closed".
Valve direction may be changed in mid travel by issuing the opposite command from the SCADA.

The valve position indicated on the SCADA is determined by the feedback status of the limit switches located in the actuator.

Should the valve be placed in LOCAL the Device status will indicate a LOCAL status on the SCADA, by means of a yellow border around the symbol. Transfer of a Device either from LOCAL to REMOTE or visa versa shall be bumpless i.e. the device shall not change state.

3.4.3.1 CONTROL ERROR

A CONTROL_ERROR will be generated when the actuator is in REMOTE Mode of operation, under the following circumstances:

- If a command is issued and the valve does not leave the original position after a configurable time delay (in the PLC)
- If a command is issued and the valve does not reach the desired output position after a configurable time delay (in the PLC)
- If the actuator feedback changes without a command being issued.

Note:

1. If the valve direction is changed during mid-travel, the monitoring time will be reinitiated and the valve will move in the new direction.
2. A control error is not generated in local mode.
3. A control error is cleared if:
   - Local selected
   - Any control command is issued
   - The control error alarm is acknowledged

3.4.3.2 WIREBREAK

A WIRE_BREAK status will be displayed if both feedbacks are lost "0", regardless of all other commands and conditions.

3.4.3.3 SELECTION

For all valves associated with LP Manifold Routes, SELECTION indicates whether the valve has been selected for Primary Route, Transition Route or both.

These valves may be selected for routing of product and will display the letters "P", "T", or "B" depending on the selection. i.e.
Primary route selection - "P"
Transition route selection - "T"
Primary and Transition selection - "B"

All valves forming part of the primary route only, will have the character "P" displayed; all valves forming part of the transition route only will have the character "T" displayed, and those valves forming part of both the primary and transition route will have the character "B" displayed.

3.4.3.4 NOT CONTROLLABLE

In the event that a Device Group is in automatic and an associated actuator in remote, a Not Controllable status will be issued when attempting to control the actuator in manual. In the event that a Device Group is in manual and an associated actuator in remote, a Not Controllable status will be issued when attempting to control the actuator in automatic. Note that the output will not be affected. In the event that an actuator is in local, no Not Controllable status will be issued.

3.4.3.5 PLC INTERLOCKS

When a valve is required to be in a specific state or PLC Interlocks are active, an "interlock" facility is available for this purpose. This will interlock the valve into the desired position. The operator cannot change the status of the valve in this condition. The Interlock command is not active in Local mode.

Should the Device be interlocked, the Device status will indicate INTERLOCKED by means of a purple border around the object.

3.4.4 POWER FAILURE

In the event of a loss of power to the actuator, the actuator will remain in its current position and a local indication is displayed.

When a power failure occurs causing the PLC to restart, all outputs are reset and the valve will remain in its current position.

3.4.5 SCADA REPRESENTATION

Control System dependant – refer to LSX and PCS7 Typicals.

The Colours on the valve are determined according to the following table.

←Priority	CONDITION					
	Open	**Close**	**Opening**	**Closing**	**Implausible**	**Stopped**
Control Error	Green Blinking	Red Blinking	Green Border Blinking	Red Border Blinking	Blue Blinking	Solid Blue
Wire Break	Blue Blinking	Blue Blinking	Blue Blinking	Blue Blinking	Blue Blinking	Blue Blinking
Not Controllable	Blue Blinking	Blue Blinking	Blue Blinking	Blue Blinking	Blue Blinking	Blue Blinking
Hard Interlock	Blue Blinking	Blue Blinking	Blue Blinking	Blue Blinking	Blue Blinking	Blue Blinking
Normal	Solid Green	Solid Red	Green Border	Red Border	Blue Blinking	Red Blinking

Manifold Control Valve

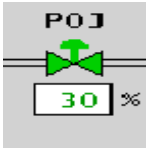

Manifold Control Valve Detail

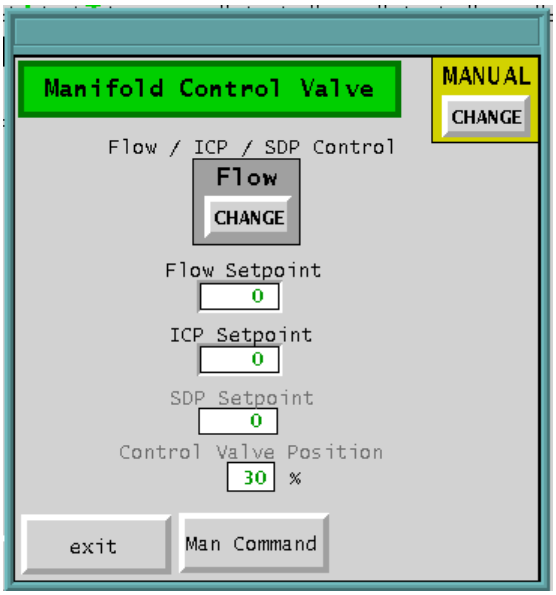

Sump Control Valve

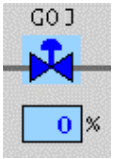

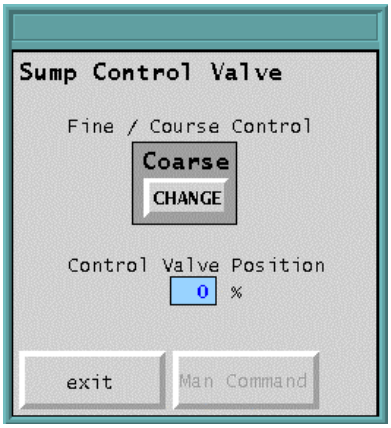

3.5 CONTROL VALVES (MODULATING)

3.5.1 DESCRIPTION FOR VALVES

A 4-20mA signal drives the valve to the required position.
A 4-20mA signal from the valve indicates the actual position feedback, with limits indicating fully open and closed position.

3.5.2 PLC I/O SIGNALS

Digital Inputs:
Valve Open Feedback
Valve Close Feedback
Valve Remote Feedback

Analogue Inputs:
Valve position feedback

Analogue Outputs:
Valve position required

Status	PLC Valve Open Feedback	PLC Valve Close Feedback	Local Feedback
Loss of feedback / wire break	0	0	X
Valve Open	0	1	X
Valve Close	1	0	X
Valve in Mid Travel/ opening/closing	1	1	X
Valve in Local			0
Valve in Remote			1

3.5.3 CONTROL METHODOLOGY

PLC control of actuated valves may be performed in either Manual or Automatic modes of operation.

The valve position depends on the analogue output from the PLC that can be set to any position required (0 – 100% throttling). An analogue input is used to indicate the current valve position (0 – 100%). Note that 100% means that the valve is fully closed and 0% is fully open.

When the operator enters a desired valve position set point, the analogue output to the actuator is changed accordingly and the valve will proceed to the desired position, until the desired position has been reached. The SCADA status will then change to “stopped”. Opening and Closing status will be transmitted to the SCADA, with a configurable deadband and configurable resolution (default of 1%) in order to reduce loading on message channels.

Valve direction may be changed in mid travel by issuing another set point from the SCADA

The valve position indicated on the SCADA is determined by the feedback status of the limit switches located in the actuator.

Manual
In manual the valve is controlled by the operator via the SCADA interface and therefore assumes responsibility. The actual valve position will depend on the valve position set point value (0 – 100%) entered by the operator on the SCADA.

Automatic
When the valve is in automatic, control is only permissible by the software within the PLC. The actual valve position is now determined by the measured variable of the PID controller.

In automatic mode (group auto) the PID controller has got two different modes of operation that are switched by the PLC:
PID Tracking mode:
In some cases the PLC needs to set the control valve to a fixed position, i.e. the controller is not in closed loop control. In this mode the PLC tracking value (control valve output position) is written to the controller output.
PID Automatic mode
In this mode the PID algorithm calculates the PID output. Depending on the measured variable set point entered by the operator on the SCADA system and the actual process variable the control valve position is adjusted accordingly.
It is possible to limit the control valve position between a high and low limit.

Should the valve be placed in LOCAL the Device status will indicate a LOCAL status on the SCADA, by means of a yellow border around the symbol. Transfer of a Device either from LOCAL to REMOTE or visa versa shall be bumpless i.e. the device shall not change state.

3.5.3.1 CONTROL ERROR

A CONTROL_ERROR will be generated when the actuator is in REMOTE Mode of operation, under the following circumstances:

- If a command is issued and the valve does not leave the original position after a configurable time delay (in the PLC)
- If a command is issued and the valve does not reach the desired output position after a configurable time delay (in the PLC)
- If the actuator feedback changes without a command being issued.

Note:
1. If the valve direction is changed during mid-travel, the monitoring time will be reinitiated and the valve will move in the new direction.
2. A control error is not generated in local mode.
3. A control error is cleared if:
    - Local selected
    - Any control command is issued
    - The control error alarm is acknowledged

3.5.3.2 WIREBREAK

A WIRE_BREAK status will be displayed if both feedbacks are lost “0”, regardless of all other commands and conditions.

3.5.3.3 SELECTION

For all valves associated with LP Manifold Routes, SELECTION indicates whether the valve has been selected for Primary Route, Transition Route or both.

These valves may be selected for routing of product and will display the letters “P”, “T”, or “B” depending on the selection. i.e.
Primary route selection - “P”
Transition route selection - “T”
Primary and Transition selection - “B”

All valves forming part of the primary route only, will have the character “P” displayed; all valves forming part of the transition route only will have the character “T” displayed, and those valves forming part of both the primary and transition route will have the character “B” displayed.

3.5.3.4 NOT CONTROLLABLE

In the event that a Device Group is in automatic and an associated actuator in remote, a Not Controllable status will be issued when attempting to control the actuator in manual. In the event that a Device Group is in manual and an associated actuator in remote, a Not Controllable status will be issued when attempting to control the actuator in automatic. Note that the output will not be affected. In the event that an actuator is in local, no Not Controllable status will be issued.

3.5.3.5 PLC INTERLOCKS

When a valve is required to be in a specific state or PLC Interlocks are active, an “interlock” facility is available for this purpose. This will interlock the valve into the desired position. The operator cannot change the status of the valve in this condition. The Interlock command is not active in Local mode.

Should the Device be interlocked, the Device status will indicate INTERLOCKED by means of a purple border around the object.

3.5.4 POWER FAILURE

In the event of a loss of power to the actuator, the actuator will remain in its current position and a local indication is displayed.

When a power failure occurs causing the PLC to restart, all outputs are reset and the valve will remain in its current position.

3.5.5 SCADA REPRESENTATION

Control System dependant – refer to LSX and PCS7 Typicals.

The Colours on the valve are determined according to the following table.

←Priority	CONDITION						
		Open	**Close**	**Opening**	**Closing**	**Implausible**	**Stopped**
	Control Error	Green Blinking	Red Blinking	Green Border Blinking	Red Border Blinking	Blue Blinking	Solid Blue
	Wire Break	Blue Blinking	Blue Blinking	Blue Blinking	Blue Blinking	Blue Blinking	Blue Blinking
	Not Controllable	Blue Blinking	Blue Blinking	Blue Blinking	Blue Blinking	Blue Blinking	Blue Blinking
	Normal	Solid Green	Solid Red	Green Border	Red Border	Blue Blinking	Red Blinking

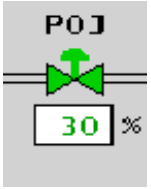

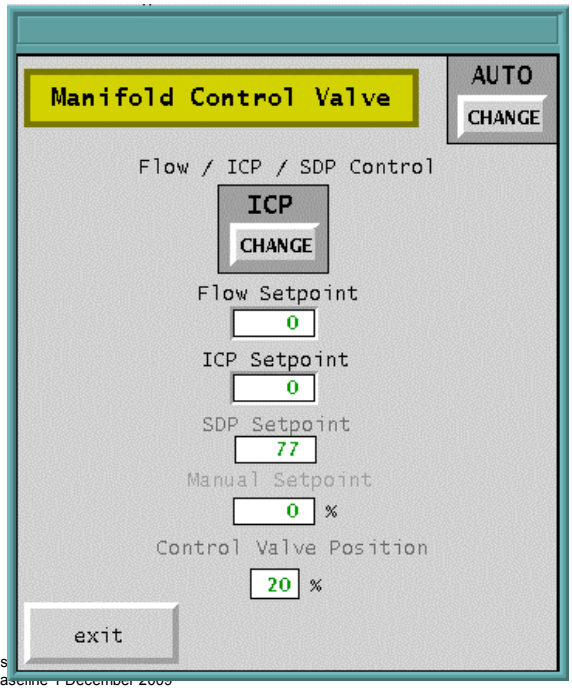

3.6 MAINLINE PUMP SETS – DIRECT ON LINE (SPAM 150C)

3.6.1 DESCRIPTION

This section covers Medium Voltage DOL Pump sets used in mainline, accumulator and booster pump applications, where SPAM 150C Electrical Protection Relays are used for electrical protection and Machine Monitoring Systems are not installed.

Multi-stage Pump Sets are used to maintain pressure along the pipeline as required. A Pump Set is operated in conjunction with Inlet, Discharge and Bypass valves.

3.6.2 HARDWIRED INTERFACE – PLC I/O SIGNALS

Where motor protection schemas require hard-wired interface to the Control System, Pump Set control will be as follows from PLC:

Temporary High digital output "Start" whilst the following conditions do not exist: "Motor running" feedback or a fault condition occurs or the monitoring time elapsed.
The "Stop" output will go low when a stop request is issued or a trip condition occurs, and will remain low until there are no faults and a start request is issued or the motor is placed in local.

NOTE: Since the protection of the mainline pump is done by the PLC, the "Stop" output is also active in local. Should there be any trip or interlock condition active, the "Stop" output will be low regardless of the mode.

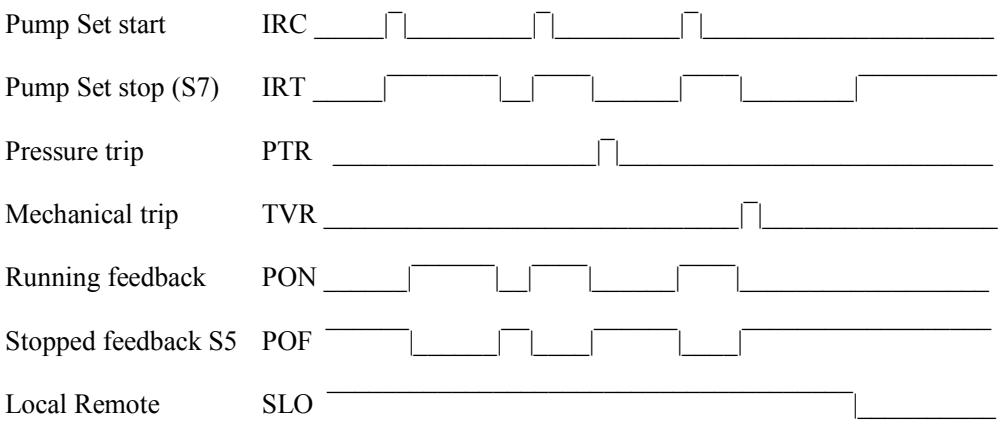

The following signals are hardwired to the Control System:

Digital Outputs

Pump Set Start	(IRC)	Temporary High for start
Pump Set Stop	(IRT)	Temporary Low for stop
Pressure trip	(PTR)	High if trip condition
Mechanical trip	(TVR)	High if trip condition

Digital Inputs

Motor Running status	PON	(Contactor closed = 1)
Motor Stopped status	POF	(Contactor open = 1)
Starter in Local status	SLO	(Remote = 1)
Master Trip Relay status	MTR	(Healthy = 1)
Fuse Blown status	FBL	(Healthy = 1)
Remote Emergency Stop status	RES	(Not activated = 1)
Thermal Overload Trip status	TOP	(Healthy = 0)
Earth Leakage Trip Status	ELP	(Healthy = 0)
Electronic Protection Relay Fail status	ERP	(Healthy = 0)
Loss of Control Voltage status	VT	(Power on = 1)
Multistart Inhibit status	SPH	(Healthy = 1)
Breaker Racked Out status	BRS	(Racked Out = 1)

3.6.3 CONTROL METHODOLOGY

PLC control of Mainline Pump and Motor Sets may be performed in either Manual or Automatic modes of operation. In manual the motor is controlled by the operator via the SCADA interface and therefore assumes responsibility. When in automatic mode of control the Pump set is controlled by pre-programmed sequences in conjunction with the Inlet, Discharge and Bypass valves. These sequences will be dealt with later in this document.

To keep the station maximum power demand to a minimum, it is only possible to start one pump at a time in manual and automatic modes of operation. The pump is also started against a closed valve. This ensures that there is no flow on start-up, minimising the pump start-up current.

When a pump start command is issued, a Start Inhibit bit and a configurable timer T1 is set in PLC. This timer value should never be set < 1 sec, thus ensuring that motor current is monitored after UL1 has been exceeded. The “Start Inhibit” is active until the timer T1 has timed out and the motor current has dropped to below the high limit (UL1).

In automatic mode, all other pump set on line sequences will progress to the point at which the respective pump sets are required to be started, and will wait until the Start Inhibit bit is cleared. A 1 second sequence delay will ensure that motor current is monitored after UL1 has been exceeded. The discharge valve will be opened as soon as the current falls below UL1.

In manual mode, if a Pump Set is not running, the start inhibit of any other Pump Set will interlock the Pump Set off. Where manual start requests have been issued with the Start Inhibit bit set, these start requests will be ignored.

Where multiple On Line sequences have been initiated, pump start requests are staggered to prevent simultaneous starts. Pump starts will occur in numeric order.

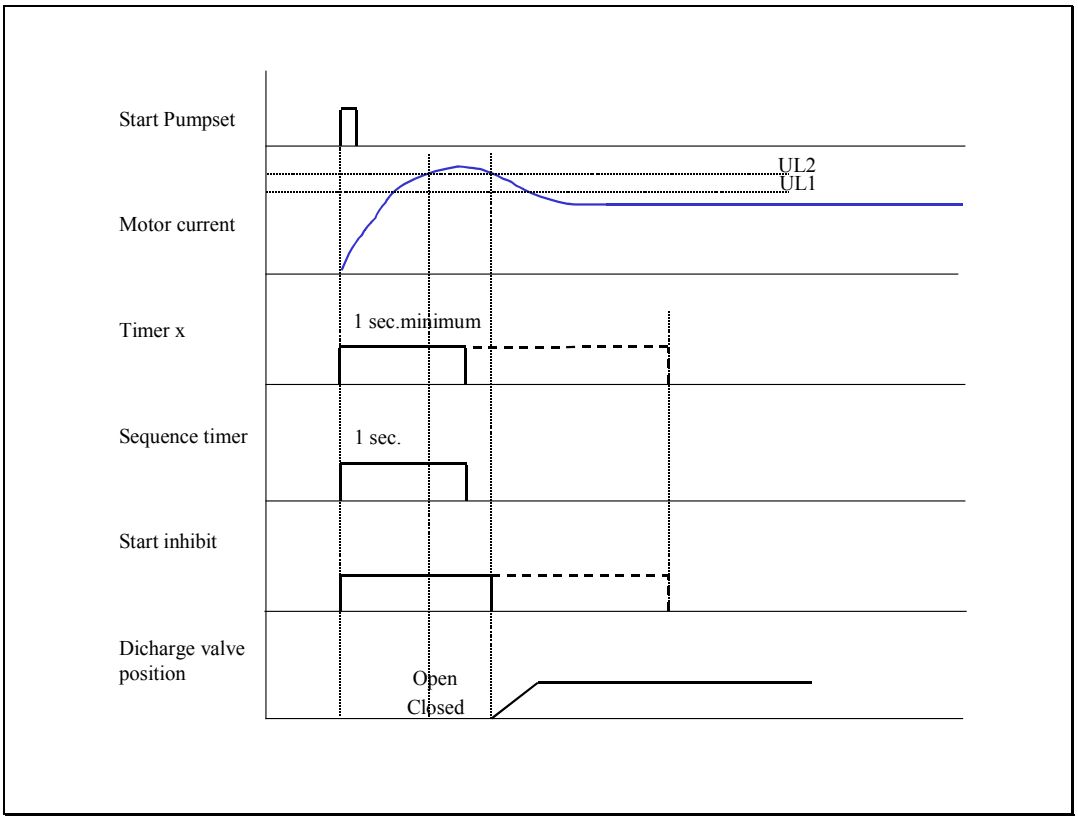

Should the Device be placed in LOCAL the Device status will indicate a LOCAL status on the SCADA. Transfer of a Device either from LOCAL to REMOTE or visa versa shall be bump less i.e. the device shall not change state.

3.6.3.1 PLC Stop Request (IRT)

The following conditions will result in a stop request being issued by the PLC: -

Mechanical Trip	(TVR)
Pressure Trip	(PTR)
Incomer OCB's open	via POF
Device Fault	
No Valid Flow-Path	via POF
Any Interlocked Condition	via POF

3.6.3.2 PLC Pressure Trip (PTR)

The following will result in a Pressure trip request being issued by the PLC: -

Pump casing temperature high	(UL2)
Delayed Suction pressure low	(LL2)
Delayed Flow low (No Flow protection)	(LL2)
Delayed Discharge pressure high	(UL2)
No Purge air flow (if available)	
No Lube Oil flow (if available)	

When the Pressure trip is activated the PTR trip output will be set. When the trip condition normalises, the PTR trip will be reset automatically. Note that the PTR Trip will cause the Main Trip Relay K14 in the Starter circuit to operate i.e. a Non-Latched trip condition will exist within the Starter panel.

During start-up, the LO Suction Pressure and HI Discharge Pressure trips are inhibited for a pre-set time [configurable in the PLC].

3.6.3.3 PLC Mechanical Trip (TVR)

The following conditions will induce a Mechanical trip from the PLC: -

Seal leakage	
Delayed Motor vibration high	(UL2)
Delayed Pump vibration high	(UL2)
Motor drive end bearing temperature high	(UL2)
Motor non-drive end bearing temperature high	(UL2)
Pump drive end bearing temperature high	(UL2)
Pump non-drive end bearing temperature high	(UL2)
Stator temperature/Purge Air Temp high	(UL2)

When the Mechanical trip is activated the TVR trip output will be set. When the trip condition normalises, the TVR trip will be reset automatically. Note that the TVR Trip will cause the Master Trip Relay in the Starter circuit to operate and will require a physical reset i.e. a Latched trip condition will exist within the Starter panel.

During start-up, the Vibration Trips are inhibited for a pre-set time [configurable in the PLC].

3.6.3.4 PLC Interlocks

Interlock ON is never used. Interlock OFF indicates that the Device is interlocked off due to an external interlock (e.g. Valid Flow Path) active. Should the Device be Interlocked, the Device status will indicate Interlocked by means of a purple border around the object.

The following conditions will cause the device to be interlocked OFF from the PLC:

Incomer OCB's open	via POF
No Valid Flow-Path	via POF
Any Interlocked Condition	via POF

3.6.3.5 HARDWIRED INTERLOCKS

PTR and TVR Trips are hardwired into the switchgear starter circuits via PLC controlled interposing relays (failsafe configuration) and thus constitute Hard Interlocks.

3.6.3.6 MOTOR PROTECTION TRIPS

The Mainline Pump & Motor Sets are protected by a number of instruments and protection relays.

The following conditions will cause a device fault and will result in the PLC stopping the Mainline Pump Set: -

Thermal overload	(TOP) Signal from SPAM
Earth leakage	(ELP) Signal from SPAM

Electronic Protection relay (SPAM)	(ERP) Signal from SPAM
Fuse blown	(FBL)
Remote Emergency stop	(RES)
Loss of Control Voltage	(VT)
Seal Leak Detection	(PSxxx) Signal from Instrument

3.6.3.7 CONTROL ERROR

A control error will be generated when the mainline pump and motor set is in REMOTE Mode of operation, under the following circumstances:

- If a command is issued and the motor contactor does not leave the original position after a configurable time delay (in the PLC)
- If a command is issued and the motor contactor does reach the opposite position after a configurable time delay (in the PLC)
- If the mainline pump and motor set feedback changes without a command being issued (S7 only).

Note:

1. A control error is not generated in local mode.
2. A control error is acknowledged if:
    - Local selected
    - If a "On" Command is issued the Control error will reset and the motor will start.
    - The control error alarm is acknowledged

3.6.3.8 WIREBREAK

A WIRE_BREAK status will be displayed if both feedbacks are lost "0", regardless of all other commands and conditions.

3.6.3.9 RACKED OUT

RACKED OUT indicates the status of the Device e.g. Ok or Racked Out.

3.6.3.10 NOT CONTROLLABLE

In the event that a Device Group is in automatic and an associated actuator in remote, a Not Controllable status will be issued when attempting to control the actuator in manual. In the event that a Device Group is in manual and an associated actuator in remote, a Not Controllable status will be issued when attempting to control the actuator in automatic. Note that the output will not be affected. In the event that an actuator is in local, no Not Controllable status will be issued.

3.6.4 POWER FAILURE

In the event of a loss of power to the mainline pump and motor set, the mainline pump and motor set will stop.
When a power failure occurs causing the PLC to restart, all outputs are reset and the motor will stop.

3.6.5 SCADA REPRESENTATION

Control System dependant – refer to LSX and PCS7 Typicals.

The Colours on the Pump Set are determined according to the following table.

←Priority	CONDITION				
	On	**Off**	**Starting**	**Aborting**	**Implausible**
Control Error	Green Blinking	Red Blinking	Green Border Blinking	Red Border Blinking	Blue Blinking
Hard Interlock	Green Blinking	Red Blinking	Green Border Blinking	Red Border Blinking	Blue Blinking
Not Controllable	Green Blinking	Red Blinking	Green Border Blinking	Red Border Blinking	Blue Blinking
Remote Stop	Green Blinking	Red Blinking	Green Border Blinking	Red Border Blinking	Blue Blinking
Loss of CV	Green Blinking	Red Blinking	Green Border Blinking	Red Border Blinking	Blue Blinking
Seal Leakage	Green Blinking	Red Blinking	Green Border Blinking	Red Border Blinking	Blue Blinking
Trips	Green Blinking	Red Blinking	Green Border Blinking	Red Border Blinking	Blue Blinking
UnderVoltage	Green Blinking	Red Blinking	Green Border Blinking	Red Border Blinking	Blue Blinking
Wire break	Blue Blinking	Blue Blinking	Blue Blinking	Blue Blinking	Blue Blinking
Normal	Solid Green	Solid Red	Green Border	Red Border	Solid Blue

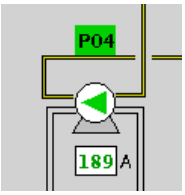

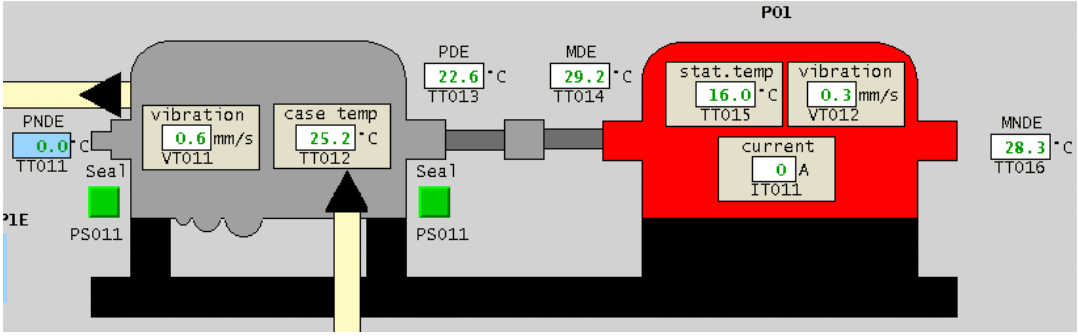
P01
PDE
22.6 °C
TT013
MDE
29.2 °C
TT014
stat.temp
16.0 °C
TT015
vibration
0.3 mm/s
VT012
PNDE
0.0 °C
TT011
Seal
PS011
vibration
0.6 mm/s
VT011
case temp
25.2 °C
TT012
Seal
PS011
current
0 A
IT011
MNDE
28.3 °C
TT016

3.7 PUMP SETS – VSD (ABB AIR-COOLED ACS1000)

3.7.1 DESCRIPTION

This section covers Medium Voltage Pump sets used in mainline applications, where ABB ACS1000 Air-Cooled VSD's have been installed and where Machine Monitoring Systems are not installed.

VSD Pump Set is used to maintain pressure/flow along the pipeline as required. The Pump Set is operated in conjunction with Inlet and Discharge valves.

The drive will not be allowed to be operated in local (at the VSD panel) without the PLC providing plant protection interlocking i.e. NO operation without the PLC online or the protection hardwired links from the PLC (TVR / PTR) being healthy. Note that local control at the VSD itself will be possible, provided the hardwired PTR and TVR signals are in a healthy state (Refer to Section 3.7.4).

3.7.2 PLC FIELD INTERFACE SIGNALS

Signal interface to the PLC may comprise of both hardwired signals and Profibus interface. Motor protection and internal interlocking will be undertaken by the VSD drive control unit.

3.7.2.1 Field instrumentation hardwired to VSD

The following inputs will be hardwired to the VSD panel:

Motor stator Temperature (U)	(TT015U)
Motor stator Temperature (V)	(TT015V)
Motor stator Temperature (W)	(TT015W)

3.7.2.2 Signals interfaced from the VSD to PLC via Profibus interface

The following analogue input signals will be interfaced to PLC via the Profibus interface:

Motor Current	(IT011)
Motor speed	(ST011)
Motor stator Temperature (U)	(TT015U)
Motor stator Temperature (V)	(TT015V)
Motor stator Temperature (W)	(TT015W)

The following analogue output signal will be interfaced to PLC via the Profibus interface:

Speed Reference	(SC011)

The following digital input signals will be interfaced to PLC via the Profibus interface:

Description	PLC mnemonics	VSD mnemonics
VSD VCB Ready to be closed	(RDYON)	RDYON
VSD Ready to run	(RDYRUN)	RDYRUN
VSD Running feedback	(PON)	RDYREF
VSD Running at speed	(ASP)	AT_SETPOINT

VSD Tripped feedback (latched)	(MTR)	TRIPPED
Emergency stop feedback	(RES)	EmergStop
Loss of control voltage feedback	(VT)	AUX POWER
Motor Winding Temp Wire Break	(TT015WB)	MotWdgMLos
Mains Supply Undervoltage	(UV)	Undervoltage
Local Remote Select feedback	(SLO)	REMOTE

RDYREF is to be used as motor running feedback and the at_setpoint feedback will be used to indicate a control deviation on the speed controller.

The following digital output signals will be interfaced to PLC via Profibus interface:

VCB close request	(F53-C)
Motor start / stop request	(IRC)
Remote reset	(RR)

The remote reset function issued by the PLC is to be logged with date and time of action.
The VCB close request is an output which is controlled by the PLC, the operator has NO access to select and operate this signal.

3.7.2.3 Signals interfaced from the VSD to PLC via hardwired interface

Two hardwired output signals, 'external motor cooling' and 'external motor protection' are used to achieve hardwire interlocks of PTR and TVR.

PTR to 'process stop'	(PTR)
TVR to 'external motor protection'	(TVR)

The PTR input to the drive is wired via DI 2.8. The TVR input to the drive is wired via DI 3.11.

PTR initiates a soft stop on the drive.

TVR initiates a trip 1b on the drive thus opening the VCB.

3.7.3 PROFIBUS MAPPING – VSD TO PLC

This table maps all the interface signal words that will be mapped to the PLC via the Profibus interface. Only those bits required in the PLC for control purposes will be masked into the block structures of the PLC software. The words required by the PLC are summarised in the table below.
Note for the reset command all fault words will be brought into the PLC and the required bit will be masked out. See section "Reset Conditions" for details.
Ref to the ABB App H – signal & parameter table for the detailed operation of the signals.

Drive Analogue Inputs	Description	Profibus Parameter Allocation			Remarks
		Group	Index	Bit	
1	Speed reference	23	01	-	Output speed reference from PLC PID control block to the drive.

Drive Analogue Outputs	Description	Profibus Parameter Allocation			Remarks
		Group	Index	Bit	

2	Motor current	01	07	-	Average motor current
3	Motor speed	01	03	-	Calculated by the drive electronics including a slip factor.
4	Motor stator temperature (U)	04	06	-	Non latched trip function within the drive
5	Motor stator temperature (V)	04	07	-	Non latched trip function within the drive
6	Motor stator temperature (W)	04	08	-	Non latched trip function within the drive

Commands

PLC signal	ABB Description	Profibus Parameter Allocation			Remarks
		Group	Index	Bit	
FxxC	ON	07	06	B0	Rdyrun – this command closes the VCB to the drive. (Ex: F53C)
Default 1	OFF 2	07	06	B1	Immediate off command
Default 1	OFF 3	07	06	B2	Emergency stop -
IRC	RUN	07	06	B3	Command to run the drive after the electronics has been charged. A ‘1’ will run the drive and a’0’ will stop the drive.
RESET	RESET	07	06	B7	Pulse input to reset the drive electronics. Only used to allow the drive to be reset after certain controlled conditions. NO operator access to this command.

Feedback signals from VSD drive to PLC

PLC signal	ABB Description	Profibus Parameter Allocation			Remarks
		Group	Index	Bit	
RDYON	RDYON	08	01	B0	VCB is ready to be closed
RDYRUN	RDYRUN	08	01	B1	Drive is charged and ready to operate
PON	RDYREF	08	01	B2	Drive has magnetised and is about to start running
MTR	TRIPPED	08	01	B3	
ASP	AT_SETPOINT	08	01	B8	Drive is running at speed
SLO	REMOTE	08	01	B9	Drive remote selected
VT	AUX POWER FAULT	08	03	B2	Auxiliary power to the drive electronics fault
	MotWdgMLos	09	02	B14	Stator temp wire break input to PLC
UV	Undervoltage	09	03	B11	
RES	EmergStop	09	04	B5	
	MCB open feedback	08	03	B4	Status of the VCB open

	MCB closed feedback	08	03	B5	Status of the VCB closed

3.7.4 CONTROL METHODOLOGY

PLC control of VSD Mainline Pump and Motor Sets may be performed in either Manual or Automatic modes of operation. In manual the motor is controlled by the operator via the SCADA interface and therefore assumes responsibility. When in automatic mode of control the Pump set is controlled by pre-programmed sequences in conjunction with the Inlet, Discharge and Bypass valves. These sequences will be dealt with later in this document.

In some instances, due to the cooling restrictions of the drive motor, the drive is not allowed to operate below a specified speed set point. Attempted operation of the drive speed below this set point will be restricted in these cases by the drive electronics (usually set to run at a minimum speed of 60%).

The ramp period (2 secs configurable) of the drive from 0% to minimum speed will be set-up in the drive to allow soft start and protect the power supply from start up current surges. The run down time (configurable) from minimum speed to 0% on switch off will be determined by the free wheel loading of the pump.

The PID controller output and set point will also be restricted to operate within the range of minimum speed to 100% where required. This restriction will be hard coded in the PLC. This restriction will also be configured in the VSD panel.

Operation of the VSD VCB is also controlled by the VSD unit through the drive electronics interconnection to the upstream VCB. The preparation of the drive, closing of VCB, charging of power pack etc will have to be initiated from the PLC. To achieve this, two start conditions have been defined, these being a cold start i.e. VCB is open and the drive needs to be prepared by closing the VCB and powering the drive controller. The other being a warm start, which has the drive energised and read to be run i.e. the VCB is closed and the electronics are charged and ready to start running the drive.

Due to the nature of the VSD soft start characteristic there is no requirement for the pump to start against closed discharge valves and no interlocking is required to restrict simultaneous starts. The drive does not have any restriction on the number of starts in time. There is no multi-start inhibit condition.

3.7.4.1 Drive cold start. (Fxxc – IRC)

The PLC will close the breaker only if it has a clear RDYON signal from the drive electronics and the VCB is open. Normal plant conditions and operation will leave the VCB closed.
This sequence will be initiated on receipt of a Start Request; with the drive not powered i.e. the VCB is open. To start from cold the PLC will be required to check the drive is ready to be operated by checking the status of the RDYON signal. If this fails the drive should be in alarm condition and the technical staff notified to reset or prepare the drive for operation.

RDYON	08-01-B0	Feedback	Drive ready to close VCB
ON	07-06-B0	Command	Close the VCB
RDYRUN	08-01-B1	Feedback	VCB is closed and the drive ready to run the pump

RUN	07-06-B3	Command	Run the pump
RDYREF	08-01-B2	Feedback	The drive is ready for speed control.

In all cases above the command must wait for the feedback signal before proceeding with the sequence.

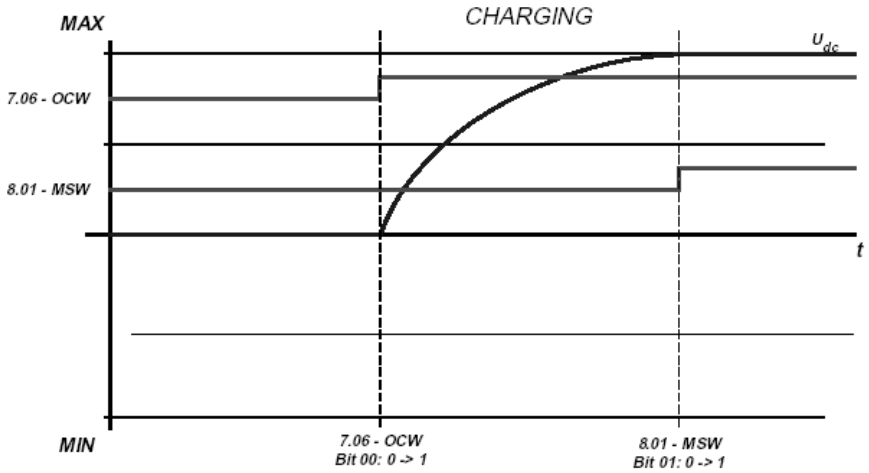

Starting condition in the PLC is defined as the time between issuing the ON command and receiving the RDYREF signal i.e. the pump symbol is green outline.

3.7.4.2 Drive Warm start (IRC)

This sequence will be initiated on receipt of a Start Request, with the drive stopped and the electronics powered up.

RDYRUN	08-01-B1	Feedback	VCB is closed and the drive ready to run the pump
RUN	07-06-B3	Command	Run the pump command
RDYREF	08-01-B2	Feedback	The drive is ready for control of the speed.

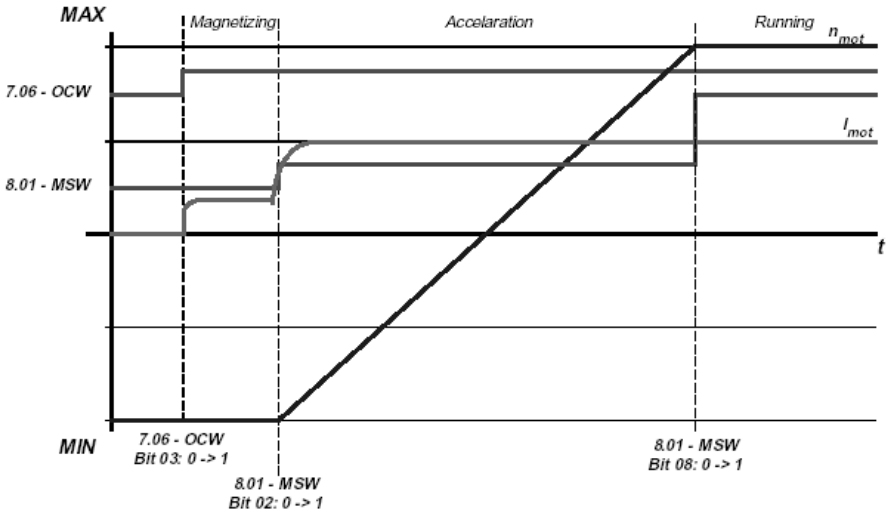

3.7.4.3 PLC Stop Request (IRT)

The drive requires the motor RUN input to be raised to a high condition and maintained high while the drive is required to run. On receipt of a stop request, the RUN command (IRC) is taken low. The following signals will cause the RUN command to be removed thus stopping the drive.

Pump set stop	not (IRC)
PLC pressure trip (PTR)	not (IRC)
PLC mechanical trip (TVR)	not (IRC)
Any device fault	not (IRC)
All Incomer VCB's open	not (IRC)

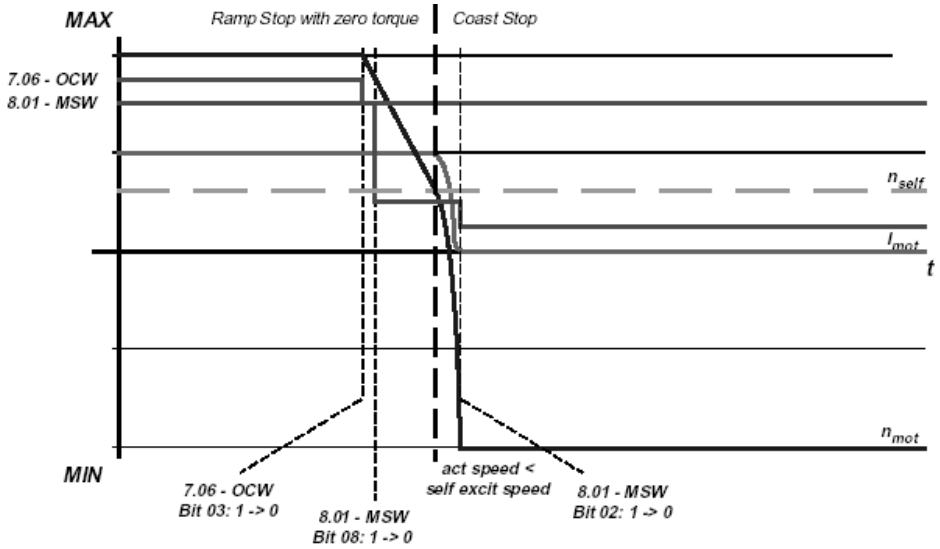

Stopping condition in the PLC is defined as the time between IRC off (ON removed) and the RDYREF signal being removed.

Timing diagram start or stop commands

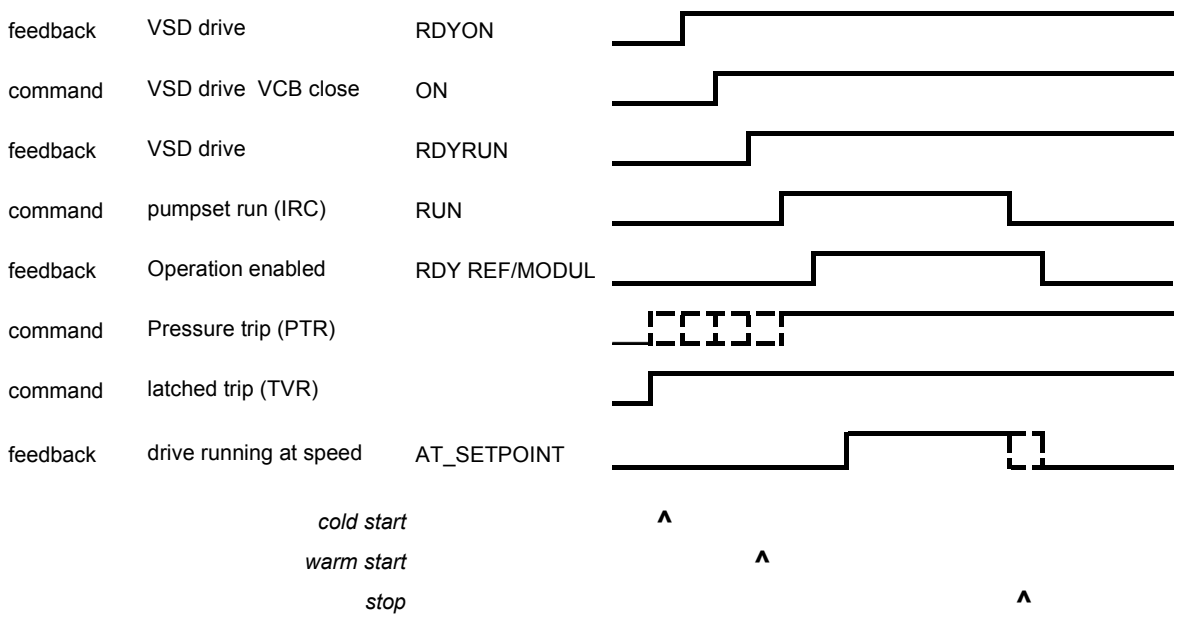

VCB close command must be kept high to keep the VCB closed.

RDYRUN: This diagram shows a normal stop and not a trip stop, thus feedback is high.

PTR does not need to be high to close the VCB (don't care if high or low). It is required to be high for warm start.

The arrows at the bottom of the diagram indicate the conditions for cold start, warm start and stop. Don't care conditions are indicated by dotted outline.

3.7.4.4 PLC Pressure Trip (PTR)

This signal is hardwired to the VSD panel as a 'process stop' input which will soft stop the drive. The signal output from the PLC must be kept 'high' to maintain the healthy condition. Feedback of this signal is given via Process Stop signal on the Profibus interface.

The following will result in a Pressure trip request being issued by the PLC via a (PTR) request signal to the VSD. (Bit=0) and dropping DI 2.8 low: -

Pump casing temperature high (UL2)
Delayed Suction pressure low (LL2)
Delayed Discharge pressure high (UL2)

When the Pressure trip (PTR) is activated the PLC output will be removed and driven low. This trip will also remove IRC i.e. stop the pump. When the trip condition normalises, the PLC output will be restored to a 'high' condition automatically. This will allow the drive electronics to be ready to re start without requiring a local reset at the VSD panel.
The PLC will be able to trip the drive in local using the PTR hardwired output to the drive. Once the condition causing the PTR trip condition has returned to healthy the PTR output will be returned to its normal healthy (high) condition.

During start-up, the LO Suction Pressure and HI Discharge Pressure trips are inhibited for a pre-set time [configurable in the PLC]. The default time is 15 seconds. These times should ideally be set to zero, as the VSD has a hydraulic soft-start effect and cavitation and overpressure should be avoided.
Pressure trip needs to be active in both local and remote.

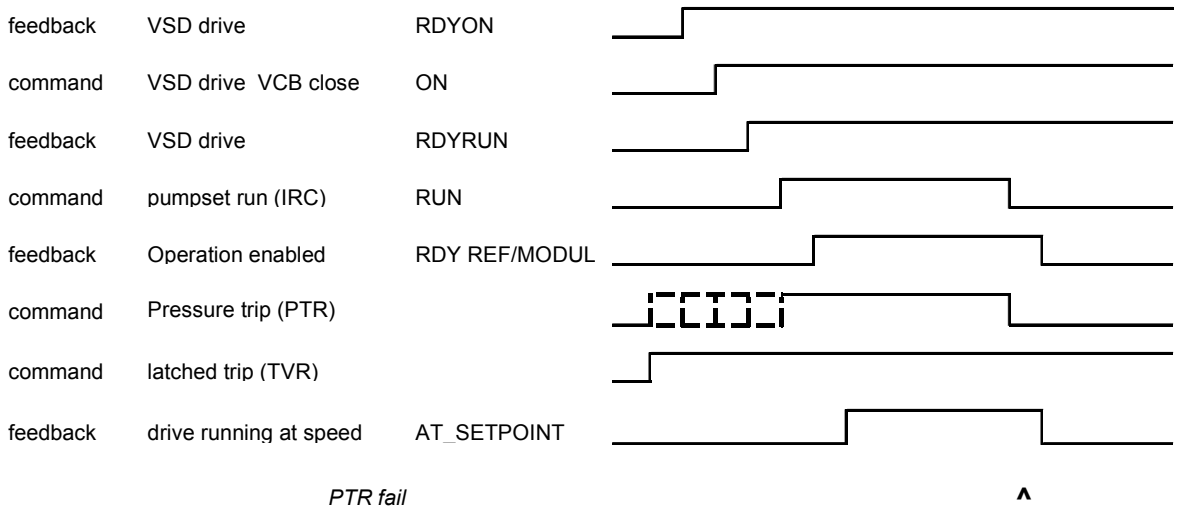

3.7.4.5 PLC Latched Trip (TVR)

This signal is hardwired to the VSD panel as an 'external motor protection' input which will latch the trip condition in the drive, and the VCB will be opened. Feedback of this signal is given via ExtMotProt (09-01-07) signal on the Profibus interface.

The following conditions will induce a Mechanical trip from the PLC: -

Seal leakage	
Delayed Motor vibration high	(UL2)
Delayed Pump vibration high	(UL2)
Motor drive end bearing temperature high	(UL2)
Motor non-drive end bearing temperature high	(UL2)
Pump drive end bearing temperature high	(UL2)
Pump non-drive end bearing temperature high	(UL2)
Stator temperature/Purge Air Temp high	(UL2)

When the TVR trip is activated the PLC output will be removed and driven low. When the trip condition normalises, the PLC output will be restored to a 'high' condition automatically. Note that the TVR Trip will cause the Drive electronics to trip the VCB and therefore will require a physical reset at the panel by technical staff. {It is the equivalent of a Master Trip Relay (MTR)}.
Mechanical trip needs to be active in both local and remote.

During start-up, the Vibration Trips are inhibited for a pre-set time [configurable in the PLC]. The default time is 15 seconds.

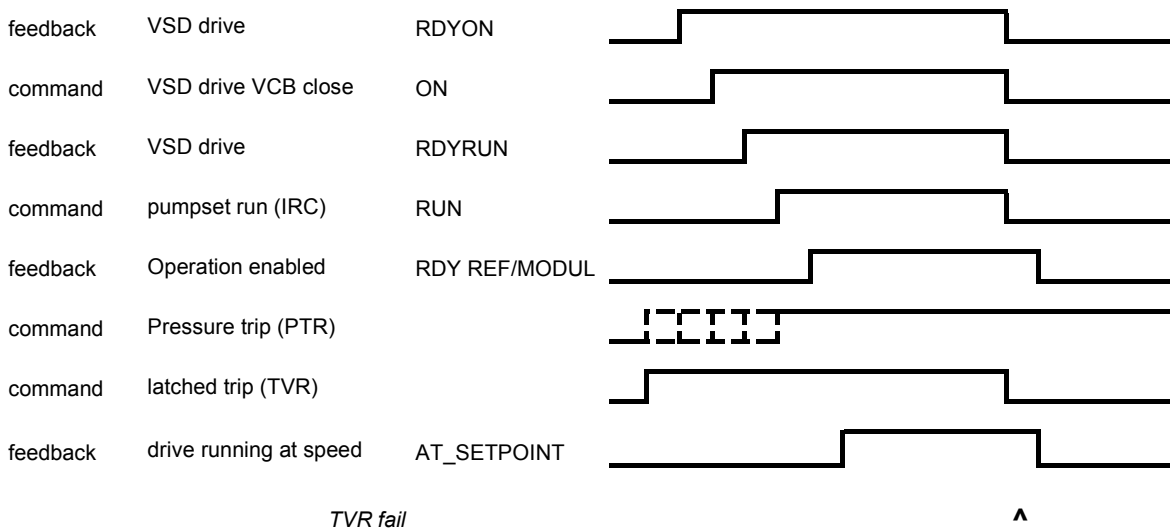

3.7.4.6 Latched / Non latched Conditions

Ref to ABB documents Appendix H Chapter 4 page 237 for details

3.7.4.7 PLC Interlocks

Interlock ON is never used. Interlock OFF indicates that the Device is interlocked off due to an external interlock (e.g. Valid Flow Path) active. Should the Device be Interlocked, the Device status will indicate Interlocked by means of a purple border around the object.

The following conditions will cause the device to be interlocked OFF from the PLC:

Incomer OCB's open	via POF
No Valid Flow-Path	via POF
Any Interlocked Condition	via POF

3.7.4.8 HARDWIRED INTERLOCKS

PTR and TVR Trips are hardwired into the switchgear starter circuits via PLC controlled interposing relays (failsafe configuration) and thus constitute Hard Interlocks.

3.7.4.9 MOTOR PROTECTION TRIPS

The Mainline Pump & Motor Sets are protected by a number of instruments and protection relays.

The following conditions will cause a device fault and will result in the PLC removing the motor start request signal: -

Local hardwired emergency stop wired to VSD panel, feedback via profibus

Loss of control voltage, feedback via profibus

VSD tripped, feedback via profibus

Seal leak detection

3.7.4.10 CONTROL ERROR

A control error will be generated when the mainline pump and motor set is in Remote, for the following reasons:

- If a command is issued and the VSD motor running (RDYREF) is not present after a configurable time delay (in the PLC)
- If stop or trip command is issued and the VSD motor running signal is not indicating a stop (not RDYREF) condition after a configurable time delay (in the PLC)
- If the mainline pump and motor set feedback changes without a command being issued

Note:

1. A control error is not generated in local mode.
2. A control error is acknowledged if:
   - Local selected
   - Stop command is issued
   - The control error alarm is acknowledged

3.7.4.11 WIREBREAK

A WIRE_BREAK status will be displayed if both feedbacks are lost “0”, regardless of all other commands and conditions.

3.7.4.12 NOT CONTROLLABLE

In the event that a Device Group is in automatic and the associated Pump Set in remote, a Not Controllable status will be issued when attempting to control the Pump Set in manual. In the event that a Device Group is in manual and the associated Pump Set in remote, a Not Controllable status will be issued when attempting to control the Pump Set in automatic. Note that the output will not be affected.

3.7.4.13 Profibus Comms fault

A VSD COMMS FAULT status will be displayed if the profibus connection is lost. In the case of the drive electronics the detected wire break will shutdown the drive and it will be inhibited from starting unless the profibus connection has been re-established. The PLC will indicate a device fault.

If the drive is in Local and the hardwired PTR and TVR signals are healthy the drive will be allowed to operate from the local panel.

3.7.4.14 Motor stator temperature wire break

The motor stator temperature devices are fitted with a wire break device that is monitored by the drive electronics. If they fail the wire break alarm is activated. The drive will shut down and the PLC is to issue a stop command. This input will cause a VSD device fault, and stop the drive.

No facility is provided to override motor stator temperature TT015 A/B/C.

3.7.4.15 Remote reset.

A remote reset facility may be required to reset any latched trip condition in the drive control panel. This is equivalent to a mechanical trip relay in the conventional pump control system. The PLC is not being provided with an ability to operate this function except for the power fail condition defined below.

See power fail for the only reset condition issued by the PLC.

3.7.5 RESET CONDITIONS

To determine if the drive may be reset by the PLC, all fault words are read in and masked.

The following conditions shall allow a remote reset via the PLC:

- Charging failure (09_03_B14) and Eskom PQM indicating healthy supply but drive indicating a tripped condition
- Auto restart (09_07_B2) and Eskom PQM indicating healthy supply but drive indicating a tripped condition
- Under voltage (09_03_B11) or Ride through failure (09_04_B9) and Eskom PQM indicating healthy supply but drive indicating a tripped condition
- Fault words 1, 2, 5, 6, indicating no faults but drive indicating a tripped condition

A PQM fail is due to ESCOM supply power fail. The PLC will monitor the power quality meter (PQM) output.

The PLC is to issue a 'reset' (07-01-B7) command when the above conditions are active and the power quality meter indicates a healthy state after a configurable time delay in the PLC. These are the only 'reset' conditions issued by the PLC. The reset is transparent to the operator. No facility is being provided to allow the operator to initiate or force this command from the PLC.

In the event of a loss of power to the mainline pump and motor set, the mainline pump and motor will stop.

To ensure that the reset signal only reacts to the above signals from the VSD the entire fault words will be read into the PLC and a mask used to filter out any other condition.

bits	0	1	2	3	4	5	6	7	8	9	10	11	12	13	14	15
Fault word 1	x	x	x	x	x	x	x	x	**1/0**	x	x	x	x	x	x	x
mask 1	0	0	0	0	0	0	0	0	**1**	0	0	0	0	0	0	0
Fault word 2	x	x	x	x	x	x	x	x	x	x	x	x	x	x	x	x
mask 2	0	0	0	0	0	0	0	0	0	0	0	0	0	0	0	0
Fault word 3	x	x	x	x	x	x	x	x	x	x	x	**1/0**	x	x	**1/0**	x
mask 3	0	0	0	0	0	0	0	0	0	0	0	**1**	0	0	**1**	0
Fault word 4	x	x	x	x	x	x	x	x	**1/0**	**1/0**	x	x	x	x	x	x
mask 4	0	0	0	0	0	0	0	0	**1**	**1**	0	0	0	0	0	0
Fault word 5	x	x	x	x	x	x	x	x	x	x	x	x	x	x	x	x
mask 5	0	0	0	0	0	0	0	0	0	0	0	0	0	0	0	0
Fault word 6	x	x	x	x	x	x	x	x	x	x	x	x	x	x	x	x
mask 6	0	0	0	0	0	0	0	0	0	0	0	0	0	0	0	0
Fault word 7	x	x	**1/0**	x	x	x	x	x	x	x	x	x	x	x	x	x
mask 7	0	0	**1**	0	0	0	0	0	0	0	0	0	0	0	0	0

do not care	x
mask out	0
mask in bit	**1**

The reset logic is to mask the above bit into the logic together with the ESCOM power fail condition defined above and will then enable the reset output from the PLC to the drive electronics. Any other bit being true ie having a one in the word will inhibit the reset function.

3.7.6 PLC / SCADA INTERFACE

SCADA interface is via a standard PCS7 EDC typical using the following typicals:
Reference 1.4.9 Drawing Number G52001-L4001-M529

3.7.7 SCADA REPRESENTATION

Control System dependant – refer to LSX and PCS7 Typicals.

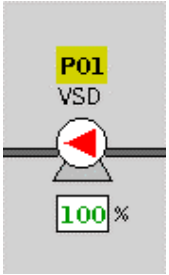
P01
VSD
100 %

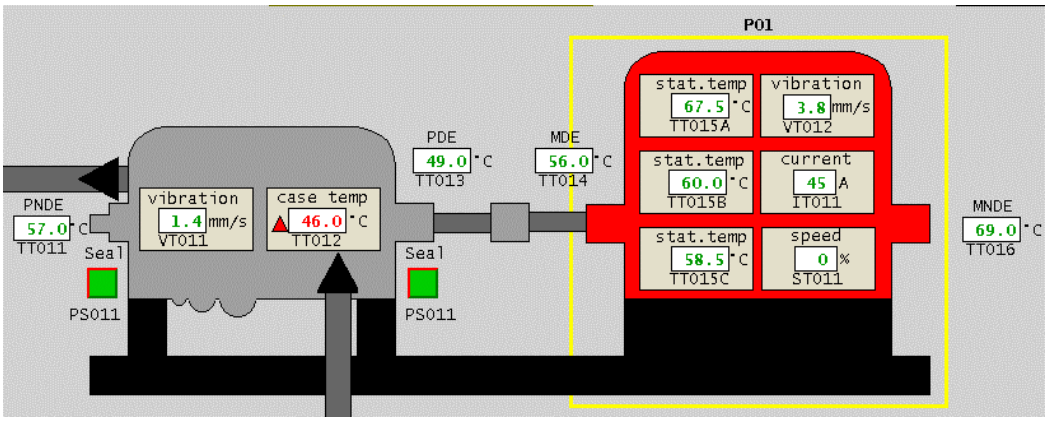
P01
stat.temp
67.5 °C
TT015A
vibration
3.8 mm/s
VT012
stat.temp
60.0 °C
TT015B
current
45 A
IT011
stat.temp
58.5 °C
TT015C
speed
0 %
ST011
PDE
49.0 °C
TT013
MDE
56.0 °C
TT014
PNDE
57.0 °C
TT011
Seal
PS011
vibration
1.4 mm/s
VT011
case temp
46.0 °C
TT012
Seal
PS011
MNDE
69.0 °C
TT016

The Colours on the Pump Set are determined according to the following table.

		Condition				
		On	**Off**	**Starting**	**Stopping**	**Implausible**
Priority	Control Error	GB	RB	GBB	RBB	BB
	Hard Interlock	GB	RB	GBB	RBB	BB
	Not Controllable	GB	RB	GBB	RBB	BB
	Remote Stop	GB	RB	GBB	RBB	BB
	Loss of CV	GB	RB	GBB	RBB	BB
	Seal Leakage	GB	RB	GBB	RBB	BB
	Trips	GB	RB	GBB	RBB	BB
	Undervoltage	GB	RB	GBB	RBB	BB
		Unack/Ack	**Unack/Ack**	**Unack/Ack**	**Unack/Ack**	**Unack/Ack**
	Mode (Implausible)	BB / B	BB / B	BB / B	BB / B	BB / B
	Wirebreak	BB / B	BB / B	BB / B	BB / B	BB / B
	Forced (Implausible)	BB / B	BB / B	BB / B	BB / B	BB / B
	Reset	N /A	N /A	N /A	N /A	N /A
	Rdyon	N /A	N /A	N /A	N /A	N /A
	Rdyrun	N /A	N /A	N /A	N /A	N /A
	At_Setpoint	N /A	N /A	N /A	N /A	N /A
	TT015_WB	N /A	N /A	N /A	N /A	N /A
	VCB	N /A	N /A	N /A	N /A	N /A

GB Green Blinking
B Blue
BB Blue Blinking
RBB Red Border Blinking
RB Red Blinking
GBB Green Border Blinking

3.8 AUXILIARY MOTORS – DIRECT ON LINE

3.8.1 DESCRIPTION

Auxiliary Motors are defined as motors that are powered from the LV Panel (400 VAC) and are used to perform such functions as Sump Transfer, Prover Transfer and Blending. All auxiliary motors are fitted with thermal overload protection.

Motor Protection trips remain active in local, manual and automatic modes of operation.

3.8.2 PLC FIELD INTERFACE SIGNALS

LV motor control will be as follows from PLC: (Digital Outputs)

When a pump is switched on, the start output is pulsed high until the running feedback is received or a fault occurs. When a pump is switched off, the stop output is pulsed high until the stopped feedback is received.

The thermal overload is hard wired into the switchgear and if activated, needs to be manually reset by technical staff before the pump can be started again.

Outputs

Motor Start	(IRC) Temporary High to start
Motor Stop	(IRT) Temporary High to stop

Inputs

Motor running Feedback	(PON) High when running
Motor stopped Feedback	(POF) High when stopped
Motor Local/Off or Remote feedback	(SLO) High when remote selected
Thermal overload	(TOP) Low when active
Emergency Stop feedback	(RES) High when activated

3.8.3 CONTROL METHODOLOGY

PLC control of Auxiliary Motor may be performed in either Manual or Automatic modes of operation. In manual the motor is controlled by the operator via the SCADA interface and therefore assumes responsibility. When in automatic mode of control the Motor is controlled by pre-programmed sequences. These sequences will be dealt with later in this document.

Should the Device be placed in LOCAL the Device status will indicate a LOCAL status on the SCADA. Transfer of a Device either from LOCAL to REMOTE or visa versa shall be bump less i.e. the device shall not change state.

3.8.3.1 CONTROL ERROR

A control error will be generated when the auxiliary motor is in REMOTE Mode of Operation, under the following circumstances:

- If a command is issued and the motor contactor does not leave the original position after a configurable time delay (in the PLC)
- If a command is issued and the motor contactor does reach the opposite position after a configurable time delay (in the PLC)
- If the auxiliary motor set feedback changes without a command being issued (S7 only).

Note:
1. A control error is not generated in local mode.
2. A control error is acknowledged if:
   - Local selected
   - If a "On" Command is issued the Control error will reset and the motor will start.
   - The control error alarm is acknowledged

3.8.3.2 WIREBREAK

A WIRE_BREAK status will be displayed if both feedbacks are lost "0", regardless of all other commands and conditions.

3.8.3.3 MOTOR PROTECTION TRIPS

The following conditions will cause a device fault and will result in the PLC stopping the Auxiliary Pump Set: -

Thermal overload (TOP) Signal

3.8.3.4 PLC INTERLOCKS

Interlock ON is never used. Interlock OFF indicates that the Device is interlocked off due to an external interlock (e.g. Valid Flow Path) active. Should the Device be Interlocked, the Device status will indicate Interlocked by means of a purple border around the object.

3.8.3.5 HARDWIRED INTERLOCKS

Hard Interlock function is used to indicate hard-wired interlocking that due to safety reasons may not be overridden. This function is used in this case to indicate e-stop status. E_STOP indicates either a panel or field emergency stop button is activated.

3.8.3.6 NOT CONTROLLABLE

In the event that a Device Group is in automatic and an associated actuator in remote, a Not Controllable status will be issued when attempting to control the actuator in manual. In the event that a Device Group is in manual and an associated actuator in remote, a Not Controllable status will be issued when attempting to control the actuator in automatic. Note that the output will not be affected. In the event that an actuator is in local, no Not Controllable status will be issued.

3.8.4 POWER FAILURE

In the event of a loss of power to the Auxiliary Motor, the motor will stop.
When a power failure occurs causing the PLC to restart, all outputs are reset and the motor will stop.

3.8.5 SCADA REPRESENTATION

Control System dependant – refer to LSX and PCS7 Typicals.

The Colours on the LV-Motor are determined according to the following table.

←Priority		CONDITION				
		On	**Off**	**Starting**	**Aborting**	**Implausible**
	Control Error	Green Blinking	Red Blinking	Green Border Blinking	Red Border Blinking	Blue Blinking
	Wire Break	Blue Blinking	Blue Blinking	Blue Blinking	Blue Blinking	Blue Blinking
	Not Controllable	Blue Blinking	Blue Blinking	Blue Blinking	Blue Blinking	Blue Blinking
	Hard Interlock	Blue Blinking	Blue Blinking	Blue Blinking	Blue Blinking	Blue Blinking
	Normal	Solid Green	Solid Red	Green Border	Red Border	Solid Blue

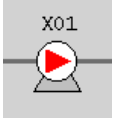

3.9 AUXILIARY MOTORS – VARIABLE SPEED DRIVES

3.9.1 DESCRIPTION

Auxiliary VSD Motors are defined as motors that are controlled by a variable speed drive controller. They are powered from the LV Panel (400 VAC). They are used in applications were the speed needs to be changed according to process conditions, such as Blending.

The electrical start/stop circuit is similar to the normal auxiliary motor, with the following exceptions:

- VSD provides protection for both the internal VSD circuitry as well as the motor. Activation of protection circuitry within the VSD is latched and is indicated via means of a common fault signal from the VSD. This fault signal replaces the thermal overload device in aux motors.
- Emergency Stop status is fed back to the PLC.

The drive speed will be controlled to the required speed set point, with the actual speed being indicated.

Motor Protection trips remain active in local, manual and automatic modes of operation.

Operator control will be as follows:

- The standard auxiliary motor typical will be used.
- Under the motor symbol an analogue field will indicate actual speed.
- Speed control will be effected using the standard blending flow control loop.

3.9.2 PLC FIELD INTERFACE SIGNALS

LV motor control will be as follows from PLC: (Digital Outputs)

When a pump is switched on, the start output is pulsed high until the running feedback is received or a fault occurs. When a pump is switched off, the stop output is pulsed high until the stopped feedback is received.

The VSD fault signal is a latched signal on the VSD and if activated, will need to be manually reset by technical staff before the pump can be started again.

Outputs

Motor Start	(IRC) Temporary High to start
Motor Stop	(IRT) Temporary High to stop

Inputs

Motor running Feedback	(PON) High when running
Motor stopped Feedback	(POF) High when stopped
Motor Remote feedback	(SLO) High when remote selected
VSD Fault	(FLT) Low when active

Remote emergency stop (RES) Low when active

3.9.3 CONTROL METHODOLOGY

PLC control of Auxiliary Motor may be performed in either Manual or Automatic modes of operation. In manual the motor is controlled by the operator via the SCADA interface and therefore assumes responsibility. When in automatic mode of control the Motor is controlled by pre-programmed sequences. These sequences will be dealt with later in this document.

Should the Device be placed in LOCAL the Device status will indicate a LOCAL status on the SCADA. Transfer of a Device either from LOCAL to REMOTE or visa versa shall be bump less i.e. the device shall not change state.

3.9.3.1 CONTROL ERROR

A control error will be generated when the auxiliary motor is in REMOTE Mode of Operation, under the following circumstances:

- If a command is issued and the motor contactor does not leave the original position after a configurable time delay (in the PLC)
- If a command is issued and the motor contactor does reach the opposite position after a configurable time delay (in the PLC)
- If the auxiliary motor set feedback changes without a command being issued (S7 only).

Note:

1. A control error is not generated in local mode.
2. A control error is acknowledged if:
    - Local selected
    - If a "On" Command is issued the Control error will reset and the motor will start.
    - The control error alarm is acknowledged

3.9.3.2 WIREBREAK

A WIRE_BREAK status will be displayed if both feedbacks are lost "0", regardless of all other commands and conditions.

3.9.3.3 MOTOR PROTECTION TRIPS

The following conditions will cause a device fault and will result in the PLC stopping the Auxiliary Pump Set: -

VSD Fault (FLT) Signal

3.9.3.4 PLC INTERLOCKS

Interlock ON is never used. Interlock OFF indicates that the Device is interlocked off due to an external interlock (e.g. Valid Flow Path) active. Should the Device be Interlocked, the Device status will indicate Interlocked by means of a purple border around the object.

3.9.3.5 HARDWIRED INTERLOCKS

Hard Interlock function is used to indicate hard-wired interlocking that due to safety reasons may not be overridden. This function is used in this case to indicate e-stop status. E_STOP indicates either a panel or field emergency stop button is activated.

3.9.3.6 NOT CONTROLLABLE

In the event that a Device Group is in automatic and an associated actuator in remote, a Not Controllable status will be issued when attempting to control the actuator in manual. In the event that a Device Group is in manual and an associated actuator in remote, a Not Controllable status will be issued when attempting to control the actuator in automatic. Note that the output will not be affected. In the event that an actuator is in local, no Not Controllable status will be issued.

3.9.4 POWER FAILURE

In the event of a loss of power to the Auxiliary Motor, the motor will stop.
When a power failure occurs causing the PLC to restart, all outputs are reset and the motor will stop.

3.9.5 SCADA REPRESENTATION

Control System dependant – refer to LSX and PCS7 Typicals.

The Colours on the LV-Motor are determined according to the following table.

←Priority		CONDITION				
		On	**Off**	**Starting**	**Aborting**	**Implausible**
	Control Error	Green Blinking	Red Blinking	Green Border Blinking	Red Border Blinking	Blue Blinking
	Wire Break	Blue Blinking	Blue Blinking	Blue Blinking	Blue Blinking	Blue Blinking
	Not Controllable	Blue Blinking	Blue Blinking	Blue Blinking	Blue Blinking	Blue Blinking
	Hard Interlock	Blue Blinking	Blue Blinking	Blue Blinking	Blue Blinking	Blue Blinking
	Normal	Solid Green	Solid Red	Green Border	Red Border	Solid Blue

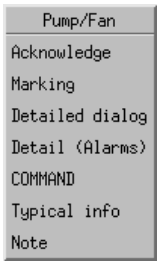

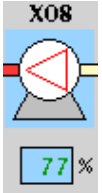

3.10 ANALOGUE TRANSMITTER

3.10.1 DESCRIPTION

To accurately monitor and control process variables, analogue transmitters are used to supply the PLC with a 4 – 20 mA signal representation of these variables. These signals are parameterised within the SCADA software. (Parameterisation incorporates definition of the range, alarm and trip values as well as signal smoothing and / or averaging if required).

Analogue values can be switched within the PLC to a substituted value, either via an technician override facility, or in the event that a fault is detected from the channel driver, or if the over or under-range limits are violated (3,6 –21mA), or if there is bad quality code.

Analogue values can be interlocked, enabling technical staff the ability to override actual signals that are faulty, thus permitting continued operation with no protection/compensation. This function shall be password protected and has to be followed up with the repair / replacement of the transmitter.

The following analogue transmitters are commonly used on Transnet Pipelines Sites:

Temperature
Level
Pressure and Differential Pressure
Flow
Density
Vibration
Current

3.10.2 PLC FIELD INTERFACE SIGNALS

The interface to the PLC will be either a two wire (loop powered) or four wire (self powered) 4 – 20 mA analogue signal. This signal will be analysed and scaled according to the required range with all the alarming and tripping functions in the PLC.

3.10.3 PARAMETRISATION

The following parameters are set in the software for every analogue:

Scaling
The raw analogue input value is scaled between the upper and lower scaling factors. This scaling factor is dependant on the span that the instrument has been calibrated to e.g. 0 – 100 %, 200 – 1200 kPa. The values are in floating point format.

Over/under range

The over and under range bits are evaluated from the raw analogue input value. The analogue input is monitored to determine if it falls within the specified operating (4 – 20mA) and overflow ranges (3,6 – 21mA).

The NAMUR guidelines for analogue signal processing define range limits for live zero (4 to 20 mA) analogue signals as being: 3.6 mA >= Analogue signal >= 21 mA. These NAMUR limits are set as fixed defaults for limit monitoring. Note that it is possible to select variable limits for overflow monitoring.

Note: The selectable limits must lie below the over range and above the under range limits of the module. Analogue values falling outside of the NAMUR ranges are also possible in as far as the module does not limit the measured values to these ranges.

Value limit and tolerance monitoring
There are 4 limit set points that can be set, two for a high and two for a low limit violation. Where available, two out of tolerance alarms can also be set, one for high and one for low tolerance violation. These are alarmed by the SCADA and can be used within the PLC program to facilitate control.

- UL2 actual value above the high alarm set point
- UL1 actual value above the high warning set point
- LL1 actual value below the low alarm set point
- LL2 actual value below the low warning set point
- Actual value above the upper tolerance set point
- Actual value below the lower tolerance set point

Averaging time
The actual value will be determined by averaging the value over a period of time that is set.

Deadband
The deadband defines a range that the actual value must exceed or fall below before these limits return to their healthy state. This reduces limit violations should the actual value fluctuate around a limit.

Damping time
A limit violation is only set once the limit is exceeded and the damping time expired. Damping time thus delays limit violations.

Substitute value
Substitution can be activated by the operator for maintenance purposes (faulty transmitter). If the substitution value is set to a value that falls within the healthy/acceptable range, the process will not be stopped.

Substitution is also activated if there is a fault on the transmitter, defined as being either a fault on the analogue channel as read by the quality code of the channel driver (usually wire break condition), or if over or under-flow is reached (over/under-range). The analogue value may be placed in override mode and a substitute value entered. Substituted values are indicated on the SCADA by means of a light blue background.

Smoothing

The actual value of an analogue value may be smoothed based on a smoothing factor entered, in accordance with formulae associated with the type of Control System being used.

3.10.4 POWER FAILURE

In the event of a loss of power to the Transmitter, the device will indicate a fault condition (and will automatically revert to the substitute value).
When a power failure occurs and is then restored causing the PLC to restart, the actual value is automatically updated.

3.10.5 SCADA REPRESENTATION

Control System dependant – refer to LSX and PCS7 Typicals.

Normal Analogue Representation

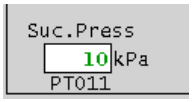

Low limit Analogue Representation

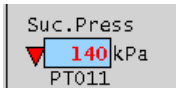

Low Limit 2 Analogue Representation

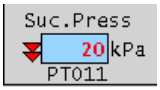

Upper Limit Analogue Representation

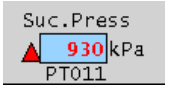

Upper Limit 2 Analogue Representation

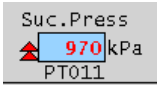

Units of measurement for different applications

TRANSMITTER	UNIT
Temperature	°C
Pressure	kPa

Flow	l/min
Density	kg/l
Vibration	mm/s
Level / Position	%
Current	A

	Text	**Background**	**Arrows**
Normal	Green	White	None
Limit violation UL1	Red	White	Up
Limit violation UL2	Red	White	Two Up
Limit violation LL1	Red	White	Down
Limit violation LL2	Red	White	Two Down
Tolerance Violation TL1			
Tolerance Violation TL2			
Wire break	Blue	Blue	None
Override	Blue	Blue	X

3.11 SWITCHES

3.11.1 DESCRIPTION

Digital inputs are used to indicate the status of switches such as level, flow, pressure, differential pressure or proximity. Digital Input status is displayed on the SCADA. When the switch is activated, the display will change colour and alarm messages shall be logged.

There shall be no control on switch signals, except forcing as is done via the SCADA to override a faulty switch. Interlocking incorporates changing the signal to be high (interlock 1), low (interlock 0) or remain as per process (process). This function shall be password protected and has to be followed up with the repair / replacement of the switch.

3.11.2 PLC FIELD INTERFACE SIGNALS

This signal will be digital and can be used for alarming.

3.11.3 POWER FAILURE

In the event of a loss of power to a Switch, the device will indicate an alarm condition.

When a power failure occurs and is then restored causing the PLC to restart, the field status is automatically updated.

3.11.4 SCADA REPRESENTATION

Control System dependant – refer to LSX and PCS7 Typicals.

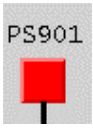

3.12 DUTY/STANDBY CONTROLLER

3.12.1 DESCRIPTION

This determines, from a selection of two or more devices (e.g. fans or pumps), a duty and a standby depending on the time they are running. It also initiates switching of these devices in automatic mode.

Used for:

- Lube oil
- Pressurisation fans
- Purge air fans
- Ventilation Fans

3.12.2 DUTY/STANDBY SELECTION

The duty fan is always indicated on the SCADA, regardless of the mode.

Each device has a counter assigned which is incremented in minutes when running, regardless of the mode. Counters may be reset either from the PLC or from SCADA, in the event that either of the counters reaches its rollover value (both the counters are reset to zero).

When duty counters are equal, device 1 is set to duty and device 2 is set to standby. When the duty device reaches its preconfigured duty hours, change over is effected.

When the changeover takes place, the standby device is first started and when the running feedback is received, the duty device is stopped and duty/standby status altered between the devices. Should the standby device fail to start, the duty device will continue to run.

Manual
In manual the device is controlled by the operator via the SCADA interface and therefore assumes responsibility. The operator should ideally run the device that is selected as duty.

Automatic
In automatic the devices are switched as follows:

There are no online and offline sequences associated with the device group although online and offline start commands may be associated if required. If these are not required the online start command should be set to “1”, ensuring that the device duty is switched as soon as the device group is changed to automatic.

Devices are required to maintain their state when the Device Group is switched to manual.

When in automatic and on issuing of a group start request on the duty/standby faceplate, the devices are switched according to the duty controller’s requirements. The online command is latched and can only be reset with the offline command. This ensures that should the group be switched to manual, the start latch is not reset and thus when the group is switched back to automatic; the devices are switched immediately according to the duty controller. In this case it is not required to issue a new group start command.

The offline start request will stop both devices.

Should the duty device not be available, the standby is started and will continue running until the duty becomes available again.

In automatic, it is possible to switch both devices off or switch both on depending on external conditions i.e. insufficient flow.

3.12.3 PLC FIELD INTERFACE SIGNALS

None.

3.12.4 POWER FAILURE

In the event of a loss of power to the Auxiliary Motor, the motor will stop.
When a power failure occurs causing the PLC to restart, all outputs are reset and the motor will stop.

3.12.5 SCADA REPRESENTATION

Control System dependant – refer to LSX and PCS7 Typicals.

Texts

18	Duty Fan Q03
19	Duty Fan Q04
20	Duty Fan Q01
21	Duty Fan Q02
26	Duty Fan Q03 + Q04
27	No duty fan selected
28	Duty Fan Q01 + Q02
41	Duty Pump X03
42	Duty Pump X04
43	Duty Pump X03 + X04
44	No duty Pump selected

4 GENERAL CONTROL PHILOSOPHY – DEVICE GROUPS

1.1 DEVICE GROUP CONTROL

4.2.1 GENERAL

Modes of Operation and Modes of Control are latched internally and are linked to all the devices in a Device Group. On a cold restart or power up of the PLC, all groups default to automatic mode of operation and MCC mode of control.

4.2.1.1 Device available

- Is set if the device is in remote and not in fault
- Creates a sequence fault if sequence is running and the device becomes not available

4.2.1.2 Group Availability

- Is set if all devices in the group are available and defined process conditions are healthy e.g. ZV's in the correct state, levels healthy.
- Status indicated on group banner

4.2.1.3 Group Ready

- Is set if the group is available and in automatic mode.
- If the group becomes "not ready", any online and flushing sequences are aborted. Offline sequences are also aborted if defined as such.

4.2.1.4 Group Fault

- Is set if any of the devices in the group are in a fault condition.
- Can be used to start the offline sequence if required

4.2.1.5 Flushing

- A FLUSH FLOW Bit is set when all devices are in a state that will allow a flow path through the group. Note that in Receivers, Launchers and Provers; the bypass valve must be closed.
- The FLUSHED Bit is set once the FLUSH FLOW Bit is set, the interface has passed through the station and a configured timer has elapsed. The FLUSHED Bit on all associated Device Groups will be reset on detection of an interface and in the case of Receivers, Launchers and Provers on detection of a low level condition as well.
- If a FLUSHED Bit is not set and the device group is placed on line, a HOT SPOT error bit will be set (Message "Possible Hot Spot"). Applicable to Pump Set, Strainer (HP Routing), Receiver, Launcher and Prover Device Groups.

4.2.1.6 Manifold Flush – Initiate Flush Seq

A manifold flush can be initiated from the Overview graphic on the station. This will initiate a flushing sequence on all groups that are available and in automatic mode of operation. It saves the operator from initiating a flush sequence from each group graphic.

4.2.1.7 No Valid Flow Path

A Group NO FLOW PATH bit is set when devices are in a state that will not permit product flow through the group i.e. a valve is not open and not in wire-break condition. A wire-break condition is taken as an open valve and the flow path is valid. The diagram below looks at the valve status in the field e.g. Valve open equals logic 1 and if wire break logic equals 1. Referring to figure below, a Valve not open and not wirebreak condition will result in a No Flow Path condition.

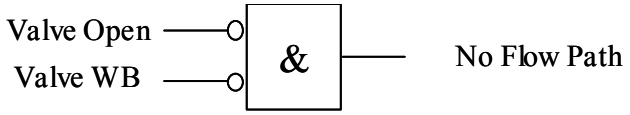

4.2.2 SEQUENCES

Sequences are used for the automatic control of Device Groups. In automatic the PLC stops and starts sequences according to operator group commands, process conditions, process errors or other sequences.

Three main sequences are used per group:

Online sequence – This sequence brings the device group to an operational state (i.e. with product flowing through).
Offline sequence - This sequence brings the device group to a non-operational state. In most cases this means that product flow bypasses the group.
Flushing sequence – This sequence opens a flow path through the device group, for the purposes of flushing. The group is then taken offline again.

4.2.2.1 Sequential Flow Charts (SFC)

SFC charts are used to ensure step-by-step execution of sequences. SFC Charts comprise of Steps (which contain control requests that are required to be executed) and transitions (which contain conditions that are required to be fulfilled prior to moving to the next Step).

Device control requests are issued to device typicals from within SFC Steps, with device feedback status forming part of conditions defined in the SFC Transition. Control Errors generated from control requests will cause associated Device Groups to become not available and will cause the sequence to stop, if defined as such.

The Transition checks for the correct feedback of the devices switched in the active Step. The transition of an offline sequence that continues running on a fault also checks if the device is not available. This enables the sequence to continue even when a control command has not been successfully executed.

4.3 RECEIVER

4.3.1 GROUP DESCRIPTION

The Receiver Group may be controlled either in automatic, manual or local mode. Receiver pressurisation and sphere removal however, remains a local operation. This functionality requires the installation of motorised actuators on the Bypass, Inlet and Outlet Valves, as well as the installation of both low and high level switches on the receiver to ensure successful draining and filling prior to being switched on-line.

The Receiver is classed as a pressure vessel and thus a local pressure gauge is installed on the Receiver to provide local indication of the pressure within the Receiver Barrel.

Where required, double block and bleed valves will be installed at the inlet of the Receiver as well as on the kicker line. These double block and bleed valves have been installed as safety isolation valves to be utilized during maintenance and or Pig / sphere removal.

A Local Sphere Detector is located within the Receiver barrel to provide an indication of spheres received. Sphere Detector switches are mounted remotely to provide an indication of the impending arrival of Spheres. Two types of sphere detectors may be installed; namely either a non-intrusive ultrasonic type or intrusive flap type. Where the ultrasonic type is used, sonic velocity inputs may be used for interface detection. Where flap types are used, two are installed for reliability purposes. Pulses received from the flap type sphere detectors are interfaced into high-speed interrupt modules.

Receiver valve actuators shall be selected to ensure that the time it takes to place the Receiver on line is faster than the time it takes for the sphere to reach the receiver after the sphere has been remotely detected.

It should be noted that three different types of spheres are used as follows: -

Batching Pigs
Cleaning Pigs
Spheres

Receiver/Launcher Transfer Tanks may be installed and used to hold receiver product during draining operations. This product is then re-introduced back into the receiver before being placed back on line. Use of transfer tanks is intended to reduce the amount of intermix created during maintenance operations. These facilities comprise of a transfer tank, routing valves, and transfer pump. This operation is intended to be a manual operation, locally controlled by the operator. The valves are thus hand-operated, and the pump locally controlled. No level transmitter is installed on these transfer tanks.

Control and Monitoring functionality shall be achieved via the following devices:

Pumps
Rx/Lx Transfer Pump (X xx)

Valves

Receiver Inlet valve	(RxA and B)
Receiver Bypass valve	(RxK)
Receiver Discharge valve	(RxE and F)
Receiver Bleed Valves	(RxT and U)
Receiver Drain valve	(RxW) where x denotes the Receiver ID
Rx/Lx Transfer Outlet Valve	(FxE)
Rx/Lx Transfer Inlet Valve	(FxA)
Rx/Lx Transfer 4-way valve	(FxR) where x denotes the Tank ID

Instrumentation

Receiver High Level	(LSH xx1)
Receiver Low Level	(LSL xx1)
Remote Sphere Detector Switch x2	(ZI xx1 & ZI xx2)
Local Sphere Detector Switch	(ZI xx3)
Transfer Pump Flow switch	(FS xx1) where xx denotes Receiver Group ID

4.3.2 MODES OF CONTROL

The Receiver Device Group shall be controllable both locally from the SCADA System installed at the Pump Station as well as remotely from the Master Control Centre in Durban.

4.3.3 MODES OF OPERATION

All devices related to the Receiver shall have the following three Modes of Operation:

- Local
- Manual
- Automatic

4.3.4 GROUP FUNCTIONALITY

4.3.4.1 MODE

Where a receiver can be operated both as a receiver and launcher, and the flow direction is such that the mode of operation of the receiver is that of launcher, a text message is displayed on the SCADA graphic indicating “LAUNCHER MODE”, and the flow direction is indicated by means of an arrow.

4.3.4.2 Sphere Counter Control

ZI 101, ZI 102 and ZI 103 are enabled for counting in receiver and launcher operation. There will be two counters for each sphere detector that are enabled depending on receiver or launcher operation according to the selected mode.

Receiver

A Local Sphere Counter and either one or two Remote Sphere Counters shall be incremented on detection of incoming spheres by local and remote Sphere Detectors respectively, in order to indicate the number of Spheres received and outstanding.

On removal of Spheres from the Receiver Barrel and successful re-priming (as indicated by both Low and High Level switches being de-activated and then activated), all Sphere Counters shall be reset. The Local Sphere Counter shall be set to zero and the Remote counter set to the difference between the Local and Remote Sphere Counters.

For forward flow all counters (ZI 101, ZI 102 and ZI 103) are enabled for receiver operation and disabled for launcher operation. The launcher loaded sphere counter setpoint is disabled. Manual reset will only reset the receiver counters. If the mode is changed and spheres are still outstanding (local sphere counter is less then remote sphere counter), these spheres will decrement the remote counters to reflect the correct state of sphere received.

Launcher
For reverse flow all counters (ZI 101, ZI 102 and ZI 103) are enabled for launcher operation and disabled for receiver operation. The launcher loaded sphere counter setpoint is enabled according to launcher operation. Manual reset will only reset the launcher counters.
Either remote sphere detector will indicate a successful launch. The local sphere counter will only indicate the amount of spheres launched.

If the mode is changed directly after a launch (launcher local sphere counter is bigger then remote counters), the receiver remote counters are incremented by one to indicate a sphere outstanding for receiver operation. The launcher remote sphere counters are also incremented by one, indicating a successful launch, and the Spheres Loaded Counter will decrement.

The sphere counts are reset if the launcher magazine is drained i.e. if the high level switch is not active. Manual resetting of the local Sphere Counter via the SCADA System is possible. This will not affect the loaded sphere counter.

Re-priming will reset both the receiver and the launcher sphere counter depending on their specific operation.

4.3.4.3 Double Block and Bleed Operation

Where required, double block and bleed valves will be installed at the inlet of the Receiver as well as on the kicker line, to replace the existing receiver inlet and discharge valves. These double block and bleed valves have been installed as safety isolation valves to be utilized during maintenance and or Pig / sphere removal.

The first block valve on both the inlet and outlet will be actuated and controlled during the normal receiver operation (as per Section 4.2 in the Automation Standard).

The second block valve and bleed valve on both the inlet and outlet of the receiver will be hand operated, with the block valve being left open and the bleed valve closed during normal operation. These valves will then be hand-operated during maintenance and or Pig / sphere removal. Both these valves will have feedback interfaced to the control system and will form part of the availability of the receiver. Valves of size > 400NB will be actuated and interfaced into the Control system as ZV valves.

4.3.4.4 No Valid Flow Path

If a No Valid Flow Path alarm condition is detected, a group NO FLOW PATH bit is set and used to transmit an Emergency Shutdown (ESD) alarm to the Master Control Centre, in order to initiate an orderly shutdown of the line (Refer to Section 4.20.5.1 General Device Group for details).

4.3.4.5 Receiver Fault

If a Receiver Not On Line or Trap Fault alarm condition is detected, an Emergency Shutdown (ESD) alarm is sent to the Master Control Centre, in order to initiate an orderly shutdown of the line (Refer to Section 4.20.5.1 General Device Group for details).

4.3.4.6 Receiver Online Sequence

The Receiver On-line Sequence is activated on receipt of –

- an Online Request from the SCADA, or
- a signal from the remote Sphere Detectors, if in bypass.

A check is undertaken to ascertain if the Receiver Group is "Ready". If ready, the Receiver Discharge and Inlet Valves are opened and on successful completion the Bypass Valve is closed. If the group is not “Ready”, the sequence cannot be initiated.

All faults during the online process shall result in the Sequence aborting, complete with all associated alarming and event logging procedures.
Once online, any faults that occur shall be alarmed, with the Receiver remaining in its current state.

4.3.4.7 Receiver Offline Sequence

The Receiver Off-line Sequence is activated on receipt of –

- an Offline Request from the SCADA

A check is undertaken to ascertain if the Receiver Group is "Ready". If ready, the Bypass Valve is opened and on successful completion, the Discharge and Inlet Valves are closed. If the group is not “Ready”, the sequence cannot be initiated.

All faults during the offline process shall result in the Sequence aborting, complete with all associated alarming and event logging procedures.

4.3.4.8 Receiver Flushing Sequence

The Receiver Flushing Sequence is activated on –

- Receipt of a Flush Request from the SCADA, if in bypass.
- Receipt of a Manifold Flush Request from the SCADA Overview Screen, if in bypass.
- Detection of an incoming interface (“Interface detected”), if in bypass. Refer to Section 4.9.4.6 HP Routing Group Interface Detection for details.
- Intermix Detection, if in bypass. Refer to Section 4.22.5.3 LP Product Routing Group for details.

The receiver flushing sequence can only be initiated if the receiver is not on line.

A check is undertaken to ascertain if the Receiver Group is "Ready". If the group is not “Ready”, the sequence cannot be initiated. The Inlet and Outlet Valves shall be automatically opened and on successful completion, the Bypass Valve is closed.

If an interface detected initiated flushing, the sequence will continue until the interface detected is reset. Then the bypass valve is opened. Once open, the discharge and inlet valves are closed. This will complete the flushing sequence.

If no interface detected is active, the receiver will be flushed for a predetermined time [configurable in the PLC, default 120 min]. Once this flushing time has expired, a check is made to see if an interface detected bit is active. If an interface detected is active the flushing sequence will continue until the interface detected is reset. Then the bypass valve is opened and once fully open, the inlet and outlet valves are closed.

All faults during the flushing process shall result in the Sequence aborting, complete with all associated alarming and event logging procedures.

4.3.5 DEVICE GROUP AVAILABILITY

The following conditions will render the Receiver Device Group "Not Available" and automatic control via the PLC will be inhibited:

- Receiver Valves in Local/Fault States (inlet, outlet and bypass)
- Receiver Drain valve not closed
- Receiver Bleed valves not closed.
- Receiver Second Block valves not open.
- Receiver not primed or level switches faulty
- Receiver Barrel Full i.e. Local Sphere Counter >Capacity - 1 (configurable in the PLC) and Receiver off line and in receive mode.
- If the Receiver is on line and in receive mode after an incoming sphere has been detected the Receiver group will become “Not Available” until the sphere has reached the trap counter (Receiver Sphere Detector). In other words – it shall not be possible to run a Receiver Offline Sequence with a sphere outstanding. Conversely, the Device Group will remain available in the situation where an incoming sphere has been detected and the Receiver is Offline, provided all conditions for availability are met. In other words it shall be possible to run an Online sequence with a sphere outstanding.

Recovery of the Receiver from a "Not Available" status shall entail the following:

- In the event of the Receiver not indicating a primed status, the Receiver will need to be pressurised until the high level switch is activated
- In the event that the Receiver Valves indicate a "Not Available" status, the fault condition will need to be corrected or the actuator switched from local to remote
- In the event that the Receiver indicates a full barrel, the Receiver will need to be drained and re-primed as indicated by the activation of the Low Level Switch followed by the High Level Switch.

4.3.6 ALARM STRATEGIES

The following conditions will result in alarms being issued.

4.3.6.1 Receiver Not On Line

If an incoming sphere has been detected and the Receiver is not on line and ready, an alarm shall be given after a timer [configurable in the PLC] has elapsed. If the receiver is not online and not ready, an alarm shall be given immediately.

This alarm is only used in receiver mode.

4.3.6.2 Incoming Sphere not received

In the event that a Sphere is detected remotely but not locally after an elapsed period of time [configurable in the PLC], an alarm shall be given. This alarm is only used in receiver mode.

4.3.6.3 Remote sphere detector fault

If only one of the remote detectors (ZI 1x1 or ZI 1x2) is activated or if the local detector is triggered without any of the remote detectors being triggered, a remote detector fault alarm is generated. This alarm is reset by clearing both remote counters (both counters made equal). The higher number of the two counters is used as the actual pig count. This alarm is only used in receiver mode.

4.3.6.4 Hotspot

Should a Receiver fail to be flushed (i.e. the FLUSH Bit is not set), the Operator is warned of the possibility of having introduced a hotspot should the Receiver status change to not offline.

4.3.6.5 No Valid Flow Path

Should the bypass valve and either the inlet or discharge valve be not open and not in wire-break condition, the operator will receive an alarm “Valves Mis-operated”.

4.3.6.6 Trap Full

Should the Trap Counter be greater than the Receiver Capacity – 1 [configurable in the PLC] the operator will receive an alarm “Trap Full”. Default Receiver Capacity is set at 7. This alarm is only used in receiver mode.

4.3.6.7 Trap Fault

In the event that a Trap Full condition is detected and an incoming sphere is detected, the operator will receive an alarm “Trap Fault”. This alarm is only used in receiver mode.

4.3.6.8 Pig launched

A message “Pig Launched” is displayed on the barrel of the launcher if the Launcher sphere detector switch is activated and the Launcher valve is not open. This message is reset if the launcher is drained i.e. drain valve open, no high level and no low level.
This message is not alarmed and only used in launcher mode.

4.3.6.9 Magazine Empty

This alarm is triggered if one or no (PLC configured setpoint) spheres are remaining in the launcher magazine to warn the operator. It is still possible to launch the last sphere.
This alarm is only used in launcher mode.

4.3.6.10 Sphere Received

If either of the two remote sphere detectors is activated, the operator will receive an alarm “Sphere detected” in receiver mode. This alarm is not displayed on any screen but is entered in the alarm channel.

4.3.7 INTERLOCKING STRATEGIES

The following interlocking strategies have been defined for the Receiver Device Group:

4.3.7.1 Hard wired interlocks

None.

4.3.7.2 PLC Interlocks

None.

4.3.8 GRAPHIC REPRESENTATION

Control System dependant – refer to LSX and PCS7 Typicals.

Receiver Group

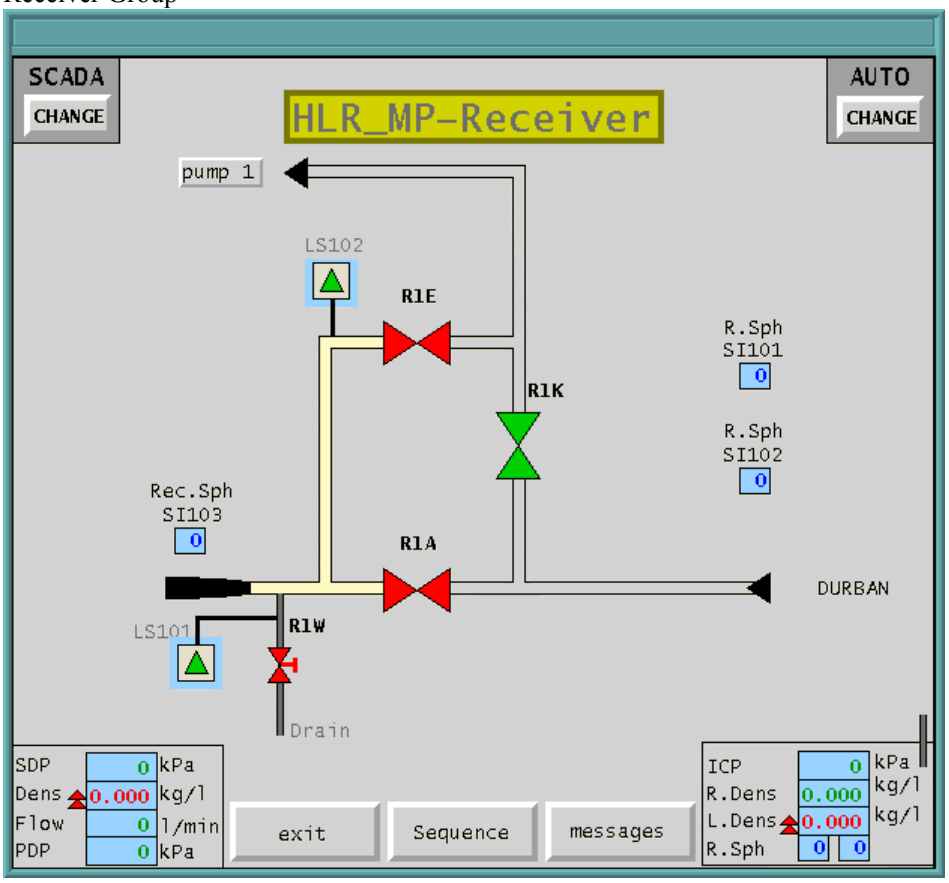

4.3.9 TYPICAL SEQUENCE FLOWCHARTS

Available on request.

4.4 MAINLINE PUMP SETS – D.O.L

4.4.1 GROUP DESCRIPTION

This section covers Medium Voltage DOL Pump sets used in mainline, accumulator and booster pump applications, where the Pumpset is not equipped with its own individual Lube Oil System, where Machine Monitoring Systems are not installed and where the Pumpsets are placed in a series configuration.

A Medium Voltage Pump Set Device Group comprises of the pump, motor, inlet (PxA), outlet (PxE) and bypass (PxK) valves. Multistage pump sets are used to maintain desired pressure profiles, by switching online and offline as required. Valves and instrumentation may vary according to application.

Control and Monitoring functionality shall be achieved via the following devices:

Valves & Pumps

Pump Set Inlet valve	(nn PxA)
Pump Set Bypass valve	(nn PxK) Note: On some stations this could be a check valve.
Pump Set Discharge valve	(XV PxE)
Mainline Pump	(P0x)

where x is the Pump Set Device Group ID.
where nn is either a ZV (proximity) or XV (actuated) valve

Instrumentation

Seal leakage	(PS0x1)
Purge airflow	(FS0x1)
Suction pressure (Mainline applications)	(PT0x1)
Flow Switch/Transmitter (Booster/Applications)	(FS 0x1)
Discharge pressure	(PT0x2)
Pump non-drive end bearing temperature	(TT0x1)
Pump casing temperature	(TT0x2)
Pump drive end bearing temperature	(TT0x3)
Motor drive end bearing temperature	(TT0x4)
Stator temperature	(TT0x5)
Motor non-drive end bearing temperature	(TT0x6)
Pump vibration	(VT0x1)
Motor vibration	(VT0x2)
Motor current	(IT0x1)

4.4.2 MODES OF CONTROL

The Pump Set Device Group shall be controllable both locally from the SCADA System installed at the Pump Station as well as remotely from the Master Control Centre in Durban.

4.4.3 MODES OF OPERATION

All devices related to the Pump Set Device Group shall have the following three Modes of Operation:

- Local
- Manual
- Automatic

4.4.4 GROUP FUNCTIONALITY

4.4.4.1 Station Start-up Methodology

Station Start up Sequences as programmed within the PLC may be used to achieve sequential start up of multiple Pump Set Device Groups, provided the selected Pump set Device Groups have been placed within automatic mode of operation. Sequence of pump on line requests may be input from the HP Routing Graphic on the SCADA.

4.4.4.2 No Valid Flow Path Interlock

If a No Valid Flow Path alarm condition is detected, a group NO FLOW PATH bit is set and used to transmit an Emergency Shutdown (ESD) alarm to the Master Control Centre, in order to initiate an orderly shutdown of the line (Refer to Section 4.20.5.1 General Device Group for details).

4.4.4.3 Maximum Demand Inhibit

Mainline Pumps are combined for maximum demand inhibit. This implies that only one pump can be started at a specified time. In automatic the pumps of each manifold are started in the same order as what the start commands were issued.

If a pump running feedback is detected, this pump sets a maximum demand inhibit for all the other pumps. The maximum demand is active for the required delay time as preconfigured per pump.

The current is not used for the maximum demand inhibit.

4.4.4.4 Pump Set Online Sequence

The Pump Set On-line Sequence is activated on receipt of –

- an Online Request from the SCADA, or
- a Line Start-up Sequence request from the MCC, or
- a Stage up request from the MCC
- a Station Start-up Sequence request

A check is undertaken to ascertain if the Pump Set Device Group is "Ready". If the group is not ready, the sequence will not be initiated. The first step of the online sequence also checks if there is a flow path before the sequence will continue. If there is no flow path the sequence is aborted.

The Bypass Valve is initially opened (if not already open), the Discharge Valve closed (if not already closed). The sequence will now wait until all the other Pump Sets “Start Inhibits” are reset before the pump is started.

When the Discharge valve is closed and there is no maximum demand inhibit from another pump, a Start-up Request (via the IRC Output) is then issued to the Switchgear. When the pump is running, the discharge valve is opened. The sequence does not look at the motor

current after the pump is started and immediately opens the discharge valve if the pump running feedback is detected. The Bypass Valve is left open.

Any faults during start-up shall result in the Sequence automatically shutting the Pump Set Device Group down (taking it Offline) complete with all associated Alarming and Event Logging procedures.

4.4.4.5 Pump Set Offline Sequence

The Pump Set Off-line Sequence is activated –

- On receipt of an Offline request
- On receipt of a Station Offline request
- due to the pump being tripped via PTR or TVR output
- on receipt of a Stage down request from the MCC
- if a device fault condition exists
- if a No Valid Flow Path condition exists
- if all Incomer OCB's are open
- if Line Overpressure interlock is activated

A check is undertaken to ascertain if the Pump Set Device Group is "Ready". If the group is not "Ready", the sequence cannot be initiated by operator request (Note the sequence can be initiated by device fault/interlock conditions if in automatic).

The Remote Stop Signal (IRT) from the PLC is first removed. On receipt of the Pump Stopped Feedback (POF), the Bypass valve is opened and once open, the Discharge valve is closed, and the Offline Sequence completed. Should the bypass valve fail to open, the sequence will abort to prevent a no flow path condition.

Any faults encountered during the running of the offline sequence will result in the sequence continuing to completion. Device faults during offline shall be used to continue the Sequence, complete with all associated Alarming and Event Logging procedures.

4.4.4.6 Pump Set Flushing Sequence

The Pump Set Flushing Sequence is activated –

- On receipt of a Flush Request from the SCADA, or
- Receipt of a Manifold Flush Request from the SCADA Overview Screen
- On detection of an incoming interface ("Interface Detected). Refer to Section 4.9.4.6 HP Routing Group Interface Detection for details.

Note that only Pump Sets that are currently not online are flushed.

A check is undertaken to ensure that the Pump Set Device Group is ready and not online. If the group is not ready, the sequence will not be initiated. The Pump Set Discharge Valve is then opened. When the Discharge valve is fully open, the Bypass valve is closed.

If an interface detected initiated flushing, the sequence will continue until the interface detected is reset. Then the bypass valve is opened. Once open, the discharge valve is closed. This will complete the flushing sequence.

If no interface detected is active (i.e. operator initiated the flush), the pump set will be flushed for a predetermined time [configurable in the PLC, default 120 min]. Once this flushing time has expired, a check is made to see if an interface detected bit is active. If an interface detected is active the flushing sequence will continue until the interface detected is reset. Then the bypass valve is opened and once fully open, the discharge valve is closed.

All faults during the flushing process shall result in the Sequence aborting, complete with all associated alarming and event logging procedures.

4.4.5 DEVICE GROUP AVAILABILITY

The following conditions will render the Device Group **"Not available"** and automatic sequences will be inhibited if:

- The pump and motor set is not available
- Any of the actuated valves in Local/Fault States
- Instrument Faulty
- Hand valves not correctly positioned / open
- No lube oil flow or pressure (where applicable)
- No purge air flow (where applicable)
- Mechanical (TVR) or Pressure (PTR) trip active
- All Incomer OCB's open
- Station discharge pressure high depending on destination

A no-flow path condition is not monitored for availability. The Online sequence checks if there is a flow path in the first step before the sequence is executed. It is however possible to run an Offline or a Flush sequence with a no flow path condition.

4.4.6 ALARM STRATEGIES

The following conditions will result in alarms being issued.

4.4.6.1 Multiple Start Inhibit

If the multiple start inhibit is active and the pumps is not running, an alarm "Multi Start inh" is activated.

4.4.6.2 Hotspot

Should a Pump Set fail to be flushed (i.e. the FLUSH Bit is not set) after a flush was requested, the Operator is warned of the possibility of having introduced a hotspot if the discharge valve is not closed.

4.4.6.3 Two Valves Closed

Should the bypass valve and the inlet or discharge valve be not open the operator will receive an alarm "Two Valves Closed".

4.4.6.4 Master Trip Relay

If the master trip relay is active, an alarm "MTR Trip" is activated.

4.4.6.5 No Valid Flow Path

Should the bypass valve and the inlet or discharge valve be not open the operator will receive an alarm "No valid flow path".

4.4.7 INTERLOCKING STRATEGIES

The following interlocking strategies have been defined for the Pump and Motor Set Device Groups:

4.4.7.1 Hard wired interlocks

None.

4.4.7.2 PLC Interlocks

All pump sets are interlocked off in local, manual and automatic mode.

4.4.7.2.1 Line Overpressure Interlock

If the station discharge pressure high high limit is reached, an alarm "SDP trip" is triggered and the pump is interlocked off.
Refer to Section 4.9.7.2.2 HP Routing Group for details.

4.4.7.2.2 Incomer OCB Interlock

If both incomers are not closed, an alarm "OCB Open" is triggered and the pump is interlocked off.

4.4.7.2.3 Lube Oil Flow/Pressure Interlock

Defined as the associated Lube Oil Flow/Pressure Switch indicating a No Flow condition. If the purge air/lube flow switch is not active, the pump is interlocked off.

4.4.7.2.4 No Valid Flow Path Interlock

If there is no flow path, an alarm "No flow path" is triggered and the pumps are interlocked off. This No Valid Flow Path Interlock is a combination of the Valid Flow Path Interlocks as defined in the following Device Groups:

- Receiver
- Launcher
- HP Routing
- LP Routing
- Pump Set D.O.L

4.4.7.2.5 Maximum Demand Inhibit Interlock

If the pump is in local or manual mode and it is not running, a maximum demand inhibit from another pump will interlock this pump off to prevent it from starting.

4.4.8 GRAPHIC REPRESENTATION

Control System dependant – refer to LSX and PCS7 Typicals.

Pumpset Group

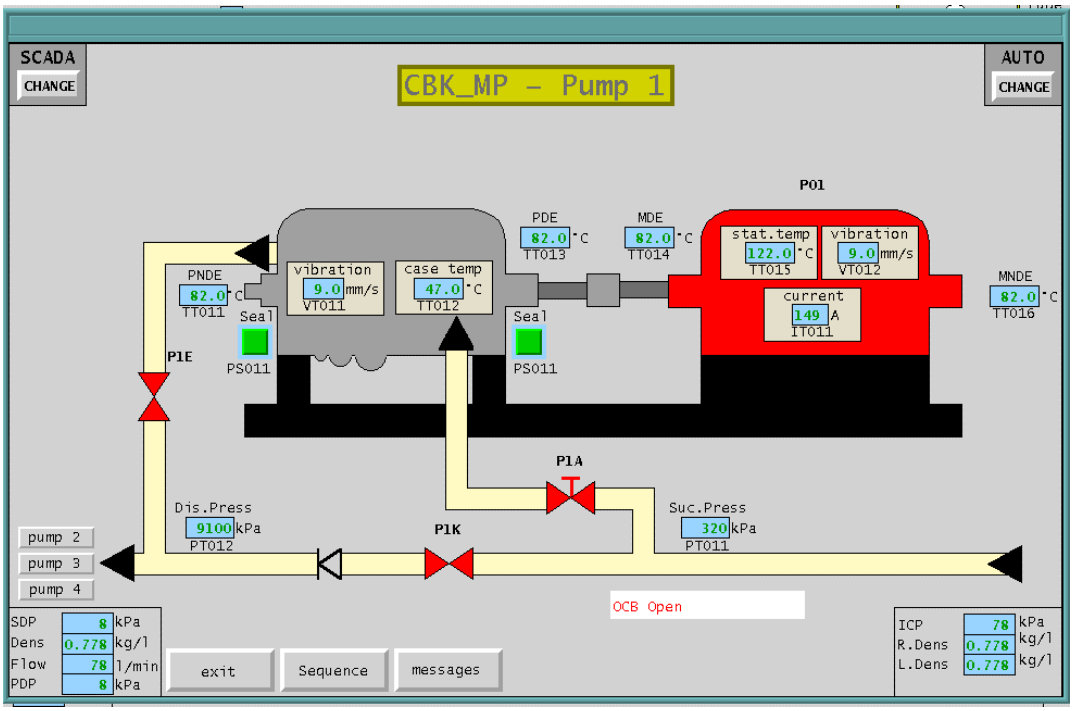

4.4.9 TYPICAL SEQUENCE FLOWCHARTS

Available on request.

4.5 PUMP SET – VSD (VARIABLE SPEED DRIVE)

4.5.1 GROUP DESCRIPTION

This section covers Medium Voltage, VSD-driven Pump sets used in mainline applications, and where the Pumpset is not equipped with its own individual Lube Oil System and where Machine Monitoring Systems are not installed.

The Medium Voltage Pump Set Device Group comprises of the variable speed drive (P01), pump inlet valve (ZVP1A) and pump discharge valve (ZVP1E).

The VSD pump set is used to maintain pressure along the pipeline. The characteristics of being able to vary the speed of the drive enables the station to control the pressure or flow in place of multi pump sets and modulating valves.

Valves & Pumps

Pump Set Inlet valve	(nn PxA)
Pump Set Discharge valve	(XV PxE)
Mainline Pump	(P0x)

where x is the Pump Set Device Group ID.
where nn is either a ZV (proximity) or XV (actuated) valve

Instrumentation

Seal leakage	(PS0x1)
Purge airflow	(FS0x1)
Suction pressure (Mainline applications)	(PT0x1)
Flow Switch/Transmitter (Booster/Applications)	(FS 0x1)
Discharge pressure	(PT0x2)
Pump non-drive end bearing temperature	(TT0x1)
Pump casing temperature	(TT0x2)
Pump drive end bearing temperature	(TT0x3)
Motor drive end bearing temperature	(TT0x4)
Stator temperature	(TT0x5)
Motor non-drive end bearing temperature	(TT0x6)
Pump vibration	(VT0x1)
Motor vibration	(VT0x2)
Motor current	(IT0x1)

4.5.2 MODES OF CONTROL

The device can be controlled from the PLC or SCADA and also locally from the VSD panel. In all cases the hardwired PTR / TVR interface will protect the process and pump.

4.5.3 MODES OF OPERATION

The following modes of control are available:

- Local
- Manual
- Automatic

4.5.4 GROUP FUNCTIONALITY

4.5.4.1 No Valid Flow Path Interlock

If a No Valid Flow Path alarm condition is detected, a group NO FLOW PATH bit is set and used to transmit an Emergency Shutdown (ESD) alarm to the Master Control Centre, in order to initiate an orderly shutdown of the line (Refer to Section 4.20.5.1 General Device Group for details).

4.5.4.2 Pump Set Online

The Pump Set On-line is activated on receipt of –

- an Online Request from the SCADA, or
- a Line Start-up request from the MCC, or
- a Station Start-up request

If the group is not ready the sequence cannot be initiated.
A check is undertaken to ascertain if the Pump Set Device Group is "Ready". If the group is not ready, the sequence will not be initiated. The first step of the online sequence also checks if there is a flow path before the sequence will continue. If there is no flow path the sequence is aborted.

The pump set is then started.

Any errors during start-up shall result in the drive automatically shutting the Pump Set Device Group down (taking it Offline) complete with all associated Alarming and Event Logging procedures.

4.5.4.3 Pump Set Offline

The Pump Set Off-line is activated –

- on receipt of an offline request
- on receipt of a station offline request
- due to the pump being tripped via PTR or TVR output
- if a device fault condition exists
- if a no valid flow path condition exists
- if the Power quality meter indicates a power failure for a configurable time (up to 15 secs) the drive would stop. (**Note**: station brownout of <5secs will not stop drive.).
- if Line over pressure interlock is activated
- Fire detected (where applicable)
- if station incomer/s VCB/s open

Note: To maintain compatibility with other stations line pressure will be used to protect the line and pump pressure will be used to protect the pump.

If the group is not ready the sequence cannot be initiated by operator request. The pump set is then stopped.

Any faults encountered during the running of the offline sequence (stopping PO1) will result in the sequence continuing to completion. Device errors during offline shall be used to continue the Sequence, complete with all associated Alarming and Event Logging procedures.

4.5.4.4 Pump Set Flushing Sequence – Series and Parallel Pumps

The Pump Set Flushing Sequence is activated –

- On receipt of a Flush Request from the SCADA, or
- Receipt of a Manifold Flush Request from the SCADA Overview Screen
- On detection of an incoming interface ("Interface Detected). Refer to Section 4.9.4.6 HP Routing Group Interface Detection for details.

Note that all Pump Sets will be flushed.

A check is undertaken to ensure that the Pump Set Device Group is ready and not online. If the group is not ready, the sequence will not be initiated. If the pumpset device group is ready and not online, the pump set device group will be placed on line provided that the flow rate through the station is higher than the combined minimum flow rate required by all the pumps.

If the flow rate is below the combined minimum flow required by the pumps, the control system will determine the maximum amount of pumps that can be operated simultaneously. The maximum amount of pumps will then be placed on-line and run until the interface has passed through these pumps (time based). One of the running pumps will then be taken off -line and the remaining offline pump/s placed on-line to ensure the remaining pumps are flushed.

If an interface detected initiated flushing, the sequence will continue until the interface detected bit is reset. Standby pumps will then be taken off-line, with duty pumps remaining on-line. Flushing operations will rotate duty / standby status of pumps.

If no interface detected bit is active (i.e. operator initiated the flush), the pump set will be flushed for a predetermined time [configurable in the PLC, default 120 min]. Once this flushing time has expired, a check is made to see if an interface detected bit is active. If an interface detected is active the flushing sequence will continue until the interface detected is reset. Standby pumps will then be taken off-line, with duty pumps remaining on-line. Flushing operations will rotate duty / standby status of pumps.

All faults during the flushing process shall result in the Sequence aborting, complete with all associated alarming and event logging procedures.

4.5.5 DEVICE GROUP AVAILABILITY

The following conditions will render the Device Group **"Not Ready"** and automatic sequences will be inhibited:

- The Mainline pump and motor is not available
- Any of the actuated valves in Local/Fault States
- Instrument Faulty
- Hand valves (ZVPxA) not correctly positioned / open
- Mechanical TVR and Pressure PTR trip active
- No valid Flow path
- Incomers Fxx (and if installed Fxx) not closed.

4.5.6 ALARM CONDITIONS

4.5.6.1 Hotspot

Not required.

4.5.6.2 Two valves closed

Not required.

4.5.6.3 No Valid Flow Path

Should the bypass valve and the inlet or discharge valve be not open the operator will receive an alarm “No valid flowpath”.

4.5.7 INTERLOCKING STRATEGIES

The following interlocking strategies have been defined for the Pump and Motor Set Device Groups:

4.5.7.1 Hard wired interlocks

None.

4.5.7.2 PLC interlocks

To achieve control of the pump while in local the hardwired PTR will be used to interlock the pump OFF if required. When the condition resets or returns to a healthy condition the PTR output is reinstated.
TVR signal is hardwired to the VSD panel as an ‘external motor protection’ input which will latch the trip condition in the drive, and the VCB will be opened.

4.5.7.2.1 Valid Flow path Interlock

The following groups must have a valid flow path:

- HP routing group.

See drawing G52001-N4038-L002 for logic.

4.5.7.2.2 Line overpressure

Should the station discharge pressure exceed the preset pressure the pump will be run offline if in auto or interlocked off if in manual or local.

4.5.7.2.3 Incomer/s not closed

Should the incoming VCB’s be not closed, the Pump set will run offline if in auto or interlocked off if in manual or local.

4.5.7.2.4 No valid flow path

If any of the valves, which block the flow through a station, are not open a "No flow path" interlock is activated. The "No flow path" interlock will run the Pumpset offline if in auto or interlocked off if in manual or local.

4.5.7.2.5 Fire Alarm

On detection of UA19x (fire confirm signal) P01 is interlocked off (If required).

4.5.8 GRAPHIC REPRESENTATION

Control System dependant – refer to LSX and PCS7 Typicals.

4.5.9 TYPICAL SEQUENCE FLOWCHARTS

Available on request.

4.6 SPEED CONTROL – VSD (HP APPLICATION)

4.6.1 GROUP DESCRIPTION

The pump speed is used for closed loop control, to control Station Suction Pressure ICP, Main line flow or Station Discharge pressure SDP. The set points are configurable by the operator via the SCADA and the Operator can also select to control using either flow, suction or discharge pressure.

The PLC default control at through stations is ICP control.

A SDP high limit is active at all times with a fixed set point configured within PLC.

This Control and Monitoring functionality shall be achieved via the following devices:

Variable Speed drive

Motor speed reference	(SC011)
Motor speed feedback	(ST011)

Instrumentation

Station inlet pressure (ICP)	(PT121)
Station outlet pressure (SDP)	(PT122)
Mainline flow	(FT121)

4.6.2 GROUP FUNCTIONALITY

4.6.2.1 Variable speed drive

Flow control is achieved with three PID control block functions:

a) Flow / ICP / SDP PID

The Operator can manually select to control Flow, ICP or SDP. According to the selection this PID will adjust the pump speed, according to the Manifold Flow, Station Incoming Pressure or Station discharge pressure at the selected set point configurable by the operator via SCADA.
Pumping/Through stations are all set to default to ICP control.

Note that there is only one PID for Flow/ICP/SDP but the actual value, set point and PID control parameters are switched according to the selected control mode i.e. Flow, ICP or SDP. The operator can select between Flow, ICP or SDP control and the PID parameters will be switched thus effecting control using the new parameters. Switching between Flow, ICP and SDP is not bumpless due to the fact that the PID controller's parameters are being changed on the fly, and it is the operator's responsibility to ensure that the set points are correct. The operator has the freedom to change these set points at any time.

The SDP high limiter restricts the Flow/ICP/SDP PID's upper value for the output while in automatic mode via the PID's high limit (H-lim) input. This will prevent the PUMP speed rising in the case of a high discharge pressure.
In manual mode the high limit (H-lim) input is disabled allowing the pump speed to vary irrespective of the SDP. Should the SDP be exceed the pump will be tripped using the normal trip interlock.

In automatic the manual value is tracked according to the actual pump speed, to enable bumpless transfer from automatic to manual mode. The operator cannot change the manual value in automatic mode.

The drive is not allowed to operate in the range between 0% to minimum permissible. This is to keep the motor within it's Ex rating. The Flow/ICP/SDP PID controller will be limited to the range minimum to 100% output.

b) SDP Limiter

To protect the line from a high discharge pressure, there is an SDP Limit controller that will limit the pump speed and thus the station discharge pressure to a fixed set point configured in the PLC. The set point is only displayed on the SCADA. Note that this controller is always set to automatic.

Under normal operating conditions this controller output is set to 100%, allowing the Flow/ICP/SDP PID control of the pump over the total allowable range from min to the max speed. Should the discharge pressure increase to above the discharge pressure set point, the PID output will slow the pump to reduce the discharge pressure via the high limit (H-lim) of the Flow/ICP/SDP PID.

If the SDP Limiter controller output is lower than 95% speed, SDP Limiter override is indicated on the SCADA system.

The controller is set to fast react.

4.6.3 DEVICE GROUP AVAILABILITY

The pump availability is displayed as the group availability.

4.6.4 ALARM STRATEGIES

None.

4.6.5 INTERLOCKING STRATEGIES

None.

4.6.6 GRAPHIC REPRESENTATION

Control System dependant – refer to LSX and PCS7 Typicals.

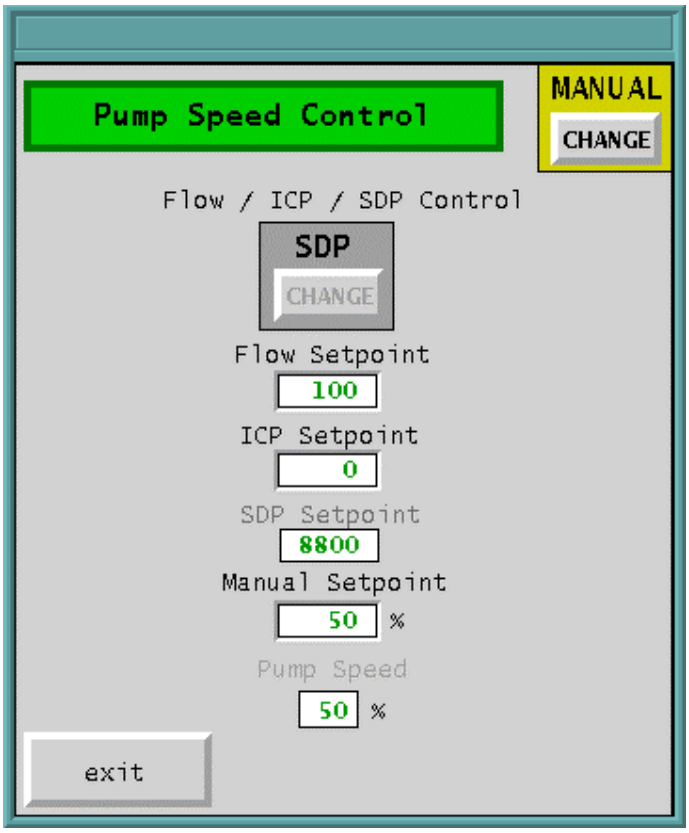
Pump Speed Control
MANUAL
CHANGE
Flow / ICP / SDP Control
SDP
CHANGE
Flow Setpoint
100
ICP Setpoint
0
SDP Setpoint
8800
Manual Setpoint
50
%
Pump Speed
50
%
exit

4.7 LAUNCHER

4.7.1 GROUP DESCRIPTION - LAUNCHER

The Launcher group can be controlled in automatic or in manual, whilst Launcher Pressurisation and Sphere Loading remain local operations. This Functionality requires the installation of Motorised Actuators on the Bypass, Inlet, Discharge and Launcher Valves, as well as the installation of both Low and High Level Switches on the Launcher to ensure successful Pressurisation prior to being switched online.

The Launcher is a pressure vessel and thus a local pressure gauge is installed on the Launcher to provide local indication of the pressure within the Launcher Barrel. A loaded sphere counter is implemented in the SCADA to indicate the amount of spheres available for launching.

Where required, double block and bleed valves will be installed at the outlet of the Launcher as well as on the kicker line. These double block and bleed valves have been installed as safety isolation valves to be utilized during maintenance and or Pig / sphere loading.

A Sphere Detector and Launcher Densitometer are installed directly after the Launcher in order to monitor interface handling and sphere launching (watchdog).

It shall be noted that three different types of spheres are used as follows: -

- Batching Pigs (loaded from the launcher barrel)
- Cleaning Pigs (loaded from the launcher barrel)
- Spheres (loaded into the launcher magazine)

Receiver/Launcher Transfer Tanks may be installed and used to hold launcher product during draining operations. This product is then re-introduced back into the launcher before being placed back on line. Use of transfer tanks is intended to reduce the amount of intermix created during maintenance operations. These facilities comprise of a transfer tank, routing valves, and transfer pump. This operation is intended to be a manual operation, locally controlled by the operator. The valves are thus hand-operated, and the pump locally controlled. No level transmitter is installed on the transfer tank.

Control and Monitoring functionality shall be achieved via the following devices:

Pumps
Rx/Lx Transfer Pump (X xx)

Valves
Launcher Inlet valve (LxA and B)
Launcher Bypass valve (LxK)
Launcher Discharge valve (LxE and F)
Launcher Bleed Valves (RxT and U)
Launcher Drain valve LxW) where x denotes the Launcher ID
Rx/Lx Transfer Outlet Valve (FxE) where x denotes the Tank ID
Rx/Lx Transfer Inlet Valve (FxA) where x denotes the Tank ID
Rx/Lx Transfer 4-way valve (FxR) where x denotes the Tank ID

Instrumentation

Launcher Hi Level	(LSH xx2)	
Launcher Lo Level	(LSL xx1)	
Local Sphere Detector Switch	(ZI xx1)	
Launcher Densitometer	(DT x12)	
Sample Point Flow switch	(FS x11)	
Transfer Pump Flow switch	(FSxx2)	where xx denotes the Launcher Device Group ID

4.7.2 MODES OF CONTROL

The Launcher Device Group shall be controllable both locally from the SCADA System installed at the Pump Station as well as remotely from the Master Control Centre in Durban.

4.7.3 MODES OF OPERATION

All devices related to the Launcher shall have the following three Modes of Operation:

- Local
- Manual
- Automatic

4.7.4 GROUP FUNCTIONALITY

4.7.4.1 Mode

Where a launcher can be operated both as a receiver and launcher, and the flow direction is such that the mode of operation of the launcher is that of receiver, a text message is displayed on the SCADA graphic indicating “RECEIVER MODE”, and the flow direction is indicated by means of an arrow.

4.7.4.2 Sphere Counter Control

On successful completion of Sphere loading (as indicated by both LO and HI Level Switches being healthy) the sphere counter input field is enabled; the operator shall enter the number of Spheres loaded into the SCADA counter input field. When the first sphere launched has been detected the input field will be locked and operator input inhibited.

The Launcher sphere counter will increment every time the sphere detector switch is activated regardless of the Launcher valve status i.e. for spheres and pigs.

The sphere count is reset if the launcher magazine is drained i.e. if the high level switch is not active. Manual resetting of the local Sphere Counter via the SCADA System is possible. This will not affect the loaded sphere counter. On detection of a successful launch within a configurable time (in the PLC), as detected by Launcher Sphere Detector and the Launcher Valve opening, the Spheres Loaded Counter shall be decremented and the Spheres Launched Counter incremented.

Manual resetting of Sphere Counters via the SCADA System is possible.

4.7.4.3 Double Block and Bleed Operation

Double block and bleed valves will be installed at the outlet of the Launcher as well as on the kicker line, to replace the existing launcher inlet and discharge valves. These double block and bleed valves have been installed as safety isolation valves to be utilized during maintenance and or Pig / sphere removal.

The first block valve on both the inlet and outlet will be actuated and controlled during the normal launcher operation (as per Section 4.6 in the Automation Standard).

The second block valve and bleed valve on both the inlet and outlet of the launcher will be hand operated, with the block valve being left open and the bleed valve closed during normal operation. These valves will then be hand-operated during maintenance and or Pig / sphere insertion. Both these valves will have feedback interfaced to the control system and will form part of the availability of the launcher. Valves of size > 400NB will be actuated and interfaced into the Control system as ZV valves.

4.7.4.4 No Valid Flow Path

If a No Valid Flow Path alarm condition is detected, a group NO FLOW PATH bit is set and used to transmit an Emergency Shutdown (ESD) alarm to the Master Control Centre, in order to initiate an orderly shutdown of the line (Refer to Section 4.20.5.1 General Device Group for details).

4.7.4.5 Sample Point monitoring

When taking a sample from the density hut a flow switch is used to trigger an event for recording purposes. This signal is delayed by 2 seconds. Change in status of this sample point switch is treated as a message and not an alarm.

4.7.4.6 Launcher Online Sequence

The Launcher On-line Sequence is activated on receipt of –

- an Online Request from the SCADA
- Table sequence start if the flushing sequence is running

A check is undertaken to ascertain if the Launcher Group is "Ready". If ready, the Launcher Discharge and Inlet Valves are opened and on successful completion the Bypass Valve is closed. If the group is not “Ready”, the sequence cannot be initiated.

All faults during the online process shall result in the Sequence aborting, complete with all associated alarming and event logging procedures.
Once online, any faults that occur shall be alarmed, with the Launcher remaining in its current state.

4.7.4.7 Launcher Offline Sequence

The Launcher Off-line Sequence is activated on receipt of –

- an Offline Request from the SCADA

A check is undertaken to ascertain if the Launcher Group is "Ready". If ready, the Bypass Valve is opened and on successful completion, the Discharge and Inlet Valves are closed. If the group is not “Ready”, the sequence cannot be initiated.

All faults during the offline process shall result in the Sequence aborting, complete with all associated alarming and event logging procedures.

4.7.4.8 Launcher Flushing Sequence

The Launcher Flushing Sequence is activated on –

- Receipt of a Flush Request from the SCADA
- Receipt of a Manifold Flush Request from the SCADA Overview Screen
- Detection of an incoming interface ("Interface detected"). Refer to Section 4.9.4.6 HP Routing Group Interface Detection for details.

The Launcher flushing sequence can only be initiated if the Launcher is not on line.

A check is undertaken to ascertain if the Launcher Group is "Ready". If the group is not "Ready", the sequence cannot be initiated. The Inlet and Outlet Valves shall be automatically opened and on successful completion, the Bypass Valve is closed.

If an interface detected initiated flushing, the sequence will continue until the interface detected is reset. Then the bypass valve is opened. Once open, the discharge and inlet valves are closed. This will complete the flushing sequence.

If no interface detected is active, the launcher will be flushed for a predetermined time [configurable in the PLC, default 120 min]. Once this flushing time has expired, a check is made to see if an interface detected bit is active. If an interface detected is active the flushing sequence will continue until the interface detected is reset. Then the bypass valve is opened and once fully open, the inlet and outlet valves are closed.

All faults during the flushing process shall result in the Sequence aborting, complete with all associated alarming and event logging procedures.

4.7.5 DEVICE GROUP AVAILABILITY

The following conditions will render the Launcher Device Group "Not available" and automatic control via the PLC will be inhibited if:

- Launcher Valves in Local/Fault States (inlet, outlet and bypass)
- Launcher Drain valve not closed
- Launcher Bleed valves not closed.
- Launcher Second Block valves not open.
- Launcher level switches faulty
- Launcher Not Pressurised (HI/LO Level Switch not enabled)

Recovery of the Launcher from a "Not Available" status shall entail the following:

- In the event of the Launcher not indicating a primed status, the Launcher will need to be pressurised until the high level switch is activated
- In the event that the Launcher Valves indicate a "Not Available" status, the fault condition will need to be corrected or the actuator switched from local to remote

4.7.6 ALARM STRATEGIES

The following conditions will result in alarms being issued.

4.7.6.1 Receiver Not Online (Hard_Interl.)

If an incoming sphere has been detected and the launcher is not on line and ready, an alarm shall be given after a timer [configurable in the PLC] has elapsed. If the launcher is not online and not ready, an alarm shall be given immediately.
This alarm is only used in receiver mode.

4.7.6.2 Incoming Sphere not Received (Loc_Sphere)

In the event that a Sphere is detected remotely but not locally after an elapsed period of time [configurable in the PLC], an alarm shall be given. This alarm is only used in receiver mode.

4.7.6.3 Remote Sphere Detector Fault (Rem_Sphere)

If only one of the remote detectors (ZI 1x1 or ZI 1x2) is activated or if the local detector is triggered without any of the remote detectors being triggered, a remote detector fault alarm is generated.
This alarm is reset by clearing both remote counters (both counters made equal). The higher number of the two counters is used as the actual pig count.
This alarm is only used in receiver mode.

4.7.6.4 Sphere Received

If either of the two remote sphere detectors is activated, the operator will receive an alarm "Sphere detected" in receiver mode. This alarm is not displayed on any screen but is entered in the alarm channel. This alarm is only used in receiver mode.

4.7.6.5 Trap Full

Should the Trap Counter be greater than the Launcher Capacity – 1 [configurable in the PLC] the operator will receive an alarm "Trap Full". Default Launcher Capacity is set at 7. This alarm is only used in receiver mode.

4.7.6.6 Trap Fault

In the event that a Trap Full condition is detected and an incoming sphere is detected, the operator will receive an alarm "Trap Fault". This alarm is only used in receiver mode.

4.7.6.7 Hotspot

Should a Launcher fail to be flushed (i.e. the FLUSH Bit is not set) after a flush was requested, the Operator is warned of the possibility of having introduced a hotspot should the Launcher status change to not offline.

4.7.6.8 No Valid Flow Path

Should the bypass valve and either the inlet or discharge valve be not open and not in wire-break condition, the operator will receive an alarm "Valves Mis-operated".

4.7.6.9 Magazine Empty

This alarm is triggered if one or no (PLC configured setpoint) spheres are remaining in the launcher magazine to warn the operator. It is still possible to launch the last sphere.
This alarm is only used in launcher mode.

4.7.6.10 Pig Launched

A message "Pig Launched" is displayed on the barrel of the launcher if the Launcher sphere detector switch is activated and the Launcher valve is not open. This message is reset if the launcher is drained i.e. drain valve open, no high level and no low level.

This message is not alarmed and only used in launcher mode.

4.7.7 INTERLOCKING STRATEGIES

The following interlocking strategies have been defined for the Launcher Device Group:

4.7.7.1 Hard wired interlocks

None.

4.7.7.2 PLC Interlocks

None.

4.7.8 GRAPHIC REPRESENTATION

Control System dependant – refer to LSX and PCS7 Typicals.

Launcher Group

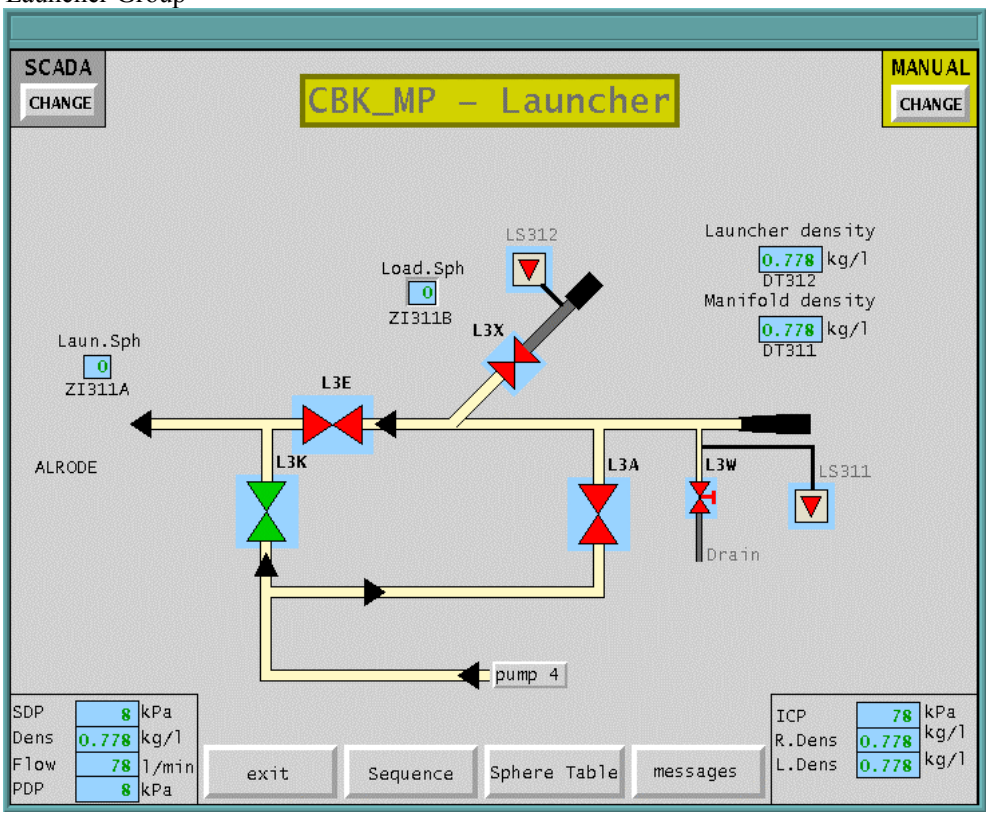

4.7.9 TYPICAL SEQUENCE FLOWCHARTS

Available on request.

4.8 INTERFACE HANDLING

4.8.1 GROUP DESCRIPTION – INTERFACE HANDLING

Interface Handling (Sphere Launching) shall be controllable both manually and automatically, whilst Launcher Pressurisation and Sphere Loading remain local operations. Default Mode shall be automatic. Automatic Launching functionality requires a Densitometer to be located on the manifold at a predefined distance in order to compensate for Launcher Valve open delay times.

Two types of launcher exist within Transnet pipelines; namely those with single launcher valves (XVLxX), and those with two launcher pins (XVLxX and LxY).

A Sphere Detector and Launcher Densitometer are installed directly after the Launcher in order to monitor interface handling and sphere launching (watchdog).

It should be noted that three different types of spheres are used as follows: -

- Batching Pigs (loaded from the launcher barrel)
- Cleaning Pigs (loaded from the launcher barrel)
- Spheres (loaded into the launcher magazine)

A "Pig" launch from the launcher barrel has no effect on the launcher table.

Control and Monitoring functionality shall be achieved via the following devices:

Valves	
Launcher valve	(LxX)
Load valve	(LxY) where required.
Instrumentation/Equipment	
Manifold Densitometer	(DT x11)
Density Hut Panel	(DH x1)

4.8.2 MODES OF CONTROL

The Interface Handling Device Group shall be controllable both locally from the SCADA System installed at the Pump Station as well as remotely from the Master Control Centre in Durban.

4.8.3 MODES OF OPERATION

All devices related to the Launcher shall have the following three Modes of Operation:

- Local
- Manual
- Automatic

4.8.4 GROUP FUNCTIONALITY

4.8.4.1 Flow Compensation

A density launch needs to consider the time it takes for the density split to reach the launcher as well as the time it takes to open the launcher valve.

The total pipe length is measured from the manifold densitometer to the launcher. Groups that can add to the total length are added if they are online.

Total pipe length = Pipe length + Pump 1 + Pump 2 + Pump 3 + Pump 4 + Launcher 1 + Receiver 1

$$Timedelay = \frac{(d \times 0.0254)^2 \pi\, l}{4\,(f * 1.67^{-5})} - launcher\ valve\ opening\ time$$

d = pipe diameter (inches)

l = total pipe length (m)

f = flow rate (l/min)

1 inch = 0,0254 m
1 l/m = 1,67e^{-5} m^3/sec

4.8.4.2 Sphere Counter Control

Before a sphere can be launched by the launch table sequence, they need to be loaded. The operator will drain the launcher until the level has dropped below the magazine i.e. not high level. He will then load the spheres into the magazine and pressurize the launcher again until the high level is made. He now has to enter the amount of spheres loaded into the loaded sphere setpoint. The loaded sphere counter entry is enabled if the launcher high level is lost.

When the Launcher valve open feedback is detected, the loaded sphere setpoint will be locked and operator input inhibited.

The Loaded sphere counter will decrement if a sphere is launched (XV L1X open).

4.8.4.3 Launch Valve Control

The launch valve is opened in automatic on a:

- Table open request
- Operator open request
- Density hut launch valve open request

The launch valve is opened in manual on a:

- Manual open request

The launch valve is interlocked open in manual on a:

- Density hut launch valve open request

The launch valve is closed in automatic on a:

- The launch was successful (as detected by the launcher sphere detector)

- The launch was not successful (elapse of open delay timer with no sphere detected by launcher sphere detector)
- Density hut launch valve close request

The launch valve is closed in manual on a:

- Manual close request

The launch valve is interlocked closed in manual on a:

- Launch successful indication (as detected by the launcher sphere detector)
- Launch fault indication (elapse of open delay timer with no sphere detected by launcher sphere detector)
- Density hut launch valve close request

Manual mode

In manual the Launcher valve (XV L1X) is opened by an Operator request. It is closed automatically if a sphere is detected or after a timeout. The operator can however close the valve before either of these conditions has occurred.

It is possible to open the launcher valve regardless of the value in the loaded sphere counter.

Automatic mode

In automatic the launching table software switches the Launcher valve.

The valve is opened and if the valve is open and the sphere detector switch is activated or on a timeout, a close request is automatically issued.

Density hut control

It is possible to control the Launcher valve from the density hut in automatic and in manual mode of operation.

The valve is opened and if the valve is open and the sphere detector switch is activated or on a timeout, a close request is automatically issued. It is however possible to issue a close command from the density hut before it is closed automatically.

In automatic mode the automatic open and close commands are used. In manual mode the valve is interlocked open and close.

It is possible to open the launcher valve regardless of the value in the loaded sphere counter.

4.8.4.4 Density Hut Launch Panel DH 11

The launch panel in the Density Hut allows the following functionality:
Load valve commands and indications are only used for the pin launcher.

4.8.4.4.1 Command Push-Buttons

The launch panel makes provision for the operator to issue the following commands to the control system:

- Open Launcher Valve request (XS111) - P/Button (Green)
- Close Launcher Valve request (XS112) - P/Button (Red)

- Reset Sphere Detector Request (XS113) - P/Button (Amber)
- Open Load Valve request (XS114) - P/Button (Green) where required
- Close Load Valve request (XS115) - P/Button (Red) where required

4.8.4.4.2 Indication Lamps

The launch panel makes provision for the following status indications from the control system to the operator.

- Launch Available (XI111) - Lamp (Green). Lit when the criteria as detailed in Section 4.8.5 Launch Table Availability are met.
- Launcher Valve open indication (XI112) - Lamp (Green). Lit when the launcher valve open feedback is received.
- Launcher Valve closed indication (XI113) - Lamp (Red). Lit when the launcher valve closed feedback is received.
- Launched Sphere Detector indication (XI114) - Lamp (Amber). Lit when a sphere has been detected by the launcher sphere detector. This indication is latched until a Reset Sphere Detector request is received.
- Load Valve open indication (XI115) - Lamp (Green). Lit when the load valve open feedback is received. Where required.
- Load Valve closed indication (XI116) - Lamp (Red). Lit when the load valve closed feedback is received. Where required.
- Sphere loaded indication (XI117) – Lamp (Amber). Lit when sphere is loaded. Where required.

4.8.4.4.3 Selector Switch

Where a Launch Panel is required to control multiple launchers, a selector switch may be provided enabling the operator the ability to select the launcher required for launching. Commands issued and status indicated is determined by the launcher that has been selected on the panel.

4.8.4.5 Sphere Launching & Launcher Table Sequence

Overview

A sphere table exists to facilitate automatic launching. The sphere launch table is filled in on the SCADA in which the operator has the ability to select the number of spheres he wishes to launch, as well as the method on which launch requests should be issued. The status of each launch is indicated.

The ability to launch up to ten spheres is based either on:

- Operator request
- Manifold density
- Time after launch of the preceding sphere.

Set points

Each of the 10 sphere launch requests is entered by a setpoint. The setpoint value determines the type of launch and indicates it accordingly as follows:

- Operator < 0.6
- Manifold density >= 0,6 and <= 0.9
- Time < 0.9 to 999 taken as seconds

The first table set point can only be an operator or density launch and the setpoint entry is limited to 0.9.

It is possible to reset each launch request setpoint individually using its "**CLEAR**" command.

To clear all set points the "**Clear all info**" command is used. This also reset the launch indications and sets the launch pointer to 1.

A clear request enters a value of 9999 in the setpoint. This is displayed in the table as ***** since it outside the configured range (0 – 999)

Launch indication
The sphere launcher table displays the following states of a launch sequence:

- All positions show red if not parameterised or parameterised but not yet launched
- When sphere launching occurs, launcher valve not closed, the present sphere launched will display green flashing until the sphere detector indicates a successful launch at which time the display will turn solid green.
- If the sphere detector does not detect the launched sphere after a configurable time (30 sec in the PLC) and the launcher valve is open, the launch is unsuccessful and is displayed in blue.

It is possible to reset all the launched status indications with the "**Reset sphere status**" command. The launch pointer is set to 1.

Sequence
The launcher table needs to be available before the launch sequence can be started.

To activate the launcher table the sequence is started. A text indication is provided to show the status of the sequence.

The launch requests are now executed according to the configured data in the Sphere launching table.

Every time the launch valve closed feedback is detected, the launch sequence is running and a launch sequence launch request was issued, the table pointer is increased to the next launch request.

The sequence is stopped if the launcher valve is closed and either of the following conditions arises:

- Requested launch Set point is not configured (> 1000)
- Table is not available
- Sphere status reset

If the last configured launch is execute the sequence is stopped. The sequence can also be stopped by the operator, or if the sphere table becomes not available.

Operator launch
If the launch table sequence is running, an operator launch is possible from the Launching table with the "**Operator Launch**" command or a density hut "Valve open" request.

If an operator request is configured and the sequence is running, this request will be executed for both a table and density hut launch request.

If a time or density launch is configured, an operator launch from the launcher sequence or from the density hut is executed without affecting the launcher sequence

Density launch
A launch based on density is achieved if the manifold density (DT111) reaches the required set point (± 0.01).

If a density launch is configured, the launch sequence is running and the required setpoint is reached, a delay timer is started with the calculated flow compensation time. If this time has expired, the sphere is launched.

Time launch
If a time launch is configured, the launch sequence is running and the launcher valve is closed, a delay timer is started. If this time has expired, the sphere is launched.

4.8.5 LAUNCH TABLE AVAILABILITY

The following conditions will render the Launch Table "Not available" and automatic control via the PLC will be inhibited:

- Launcher Valve in Local/Fault States
- Launcher level switches faulty
- Launcher Not Pressurised (HI/LO Level Switch not enabled)
- Launcher Sphere loaded Counter < [configurable in the PLC]
- Launcher not online
- Launcher not in automatic
- First configured launch request not an operator request or density launch

4.8.6 DENSITY HUT LAUNCH AVAILABILITY

The following conditions will render a Launch from the Density Hut "Not available" and automatic control via the PLC will be inhibited:

- Launcher Valve in Local/Fault States
- Launcher level switches faulty
- Launcher Not Pressurised (HI/LO Level Switch not enabled)
- Launcher Sphere loaded Counter < [configurable in the PLC]
- Launcher not online

4.8.7 ALARM STRATEGIES

The following conditions will result in alarms being issued.

4.8.7.1 Launch Fault

Issued when the launcher valve has opened, and the sphere has not been detected after an elapsed time period.

4.8.8 INTERLOCKING STRATEGIES

The following interlocking strategies have been defined for the Launcher Device Group:

4.8.8.1 Hard wired interlocks

None.

4.8.8.2 PLC Interlocks

4.8.8.2.1 Launcher valve

The launcher valve is interlocked closed if the load valve is not closed.

4.8.8.2.2 Load valve

The load valve is interlocked closed if the launcher valve is not closed.

4.8.9 GRAPHIC REPRESENTATION

Control System dependant – refer to LSX and PCS7 Typicals.

Launcher Table

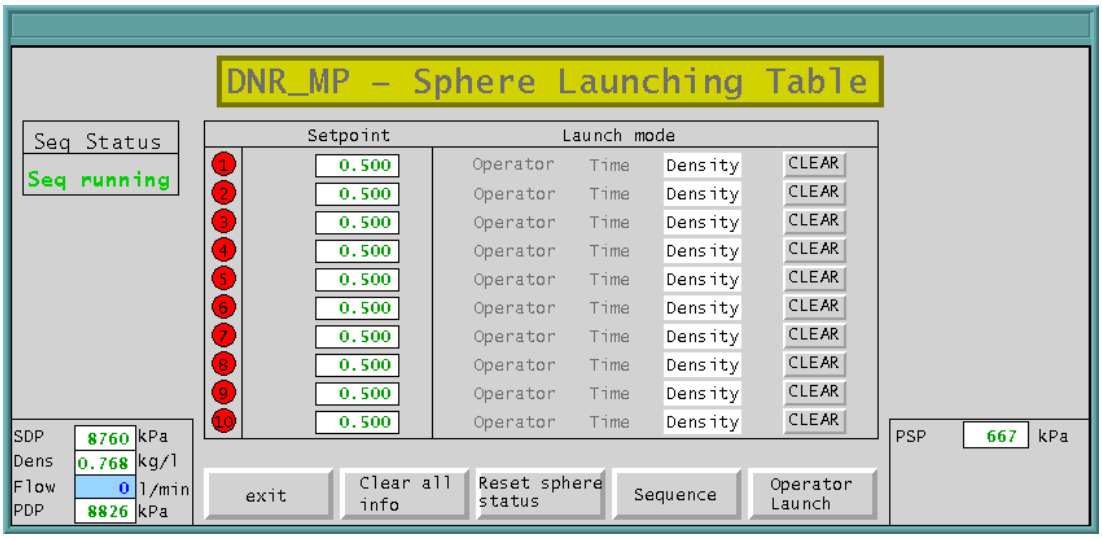

4.8.10 TYPICAL SEQUENCE FLOWCHARTS

Available on request.

4.9 HP ROUTING

4.9.1 GROUP DESCRIPTION

This group shall be either automatically or manually controlled. Station Inlet Block Valve and Station Outlet Block Valve shall be actuated, in order to affect automatic Station Isolation.

Control and Monitoring functionality shall be achieved via the following devices:

Valves

Station Inlet Block Valve	(IxA)
Station Outlet Block Valve	(IxE)
Strainer Inlet Valves	(SxA) where applicable
Strainer Outlet Valves	(SxE) where applicable
Strainer Bypass Valves	(SxK) where fitted
Main Flow Control Valve	(PxJ)

Where x denotes the Manifold ID

Instrumentation

Station inlet temperature	(TTxx1)
Station outlet temperature	(TTxx2)
Station inlet pressure	(PTxx1)
Station outlet pressure	(PTxx2)
Strainer differential pressure	(PDT xx1)
Mainline Flow	(FTxx1)
Mainline Product Sonic Velocity	(KT xx1)
Remote Densitometer	(DTxx1)
Remote Optic Interface Detector	(OTxx1)
Remote Inlet Chamber Intruder Alarm	(AS xx1)
Remote Inlet Chamber Panel Intruder Alarm	(AS xx2) where applicable
Station Inlet Chamber Intruder Alarm	(AS xx3) where applicable
Station Outlet Chamber Intruder Alarm	(AS xx4) where applicable
Remote Inlet Chamber High Level switch	(LSH xx1)
Station Inlet Chamber High Level switch	(LSH xx2)
Station Outlet Chamber High Level switch	(LSH xx3)
EPV Valve Leak Detect Flow Switches	(FS xx1) where applicable

Where xx denotes the HP Routing Device Group ID

4.9.1.1 Group Description - Single Strainer

Strainer valves form part of the HP routing group and are controlled by its sequences (Note that strainer valves are not actuated but are fitted with position indication for interlocking purposes). A high differential pressure condition will be alarmed.

4.9.1.2 Group Description - Dual Strainers

Where dual strainers have been fitted, flow may be routed through either of the strainers - either of the strainer inlet/outlet valves is actuated, and thus automatic change over is enabled. A high differential pressure condition will also be alarmed.

4.9.2 MODES OF CONTROL

The HP Routing Device Group shall be controllable both locally from the SCADA System installed at the Pump Station as well as remotely from the Master Control Centre in Durban.

4.9.3 MODES OF OPERATION

All devices related to the HP Routing shall have the following three Modes of Operation:

- Local
- Manual
- Automatic

4.9.4 GROUP FUNCTIONALITY

4.9.4.1 Remote Block Valve Chamber

The Remote Chamber may be used to house the following equipment:

1. Sphere Detector/s to detect incoming spheres or pigs.
2. Densitometer (DT-xx1) and Optical Interface Detector (OID) (OT-xx1) is used to measure product density and detect product interface. Primary functions of the interface detection are to allow for the timeous execution of flushing sequences, and assist in switching.
3. Intruder switches and a product level switch make up the remainder of the instrumentation within the Remote chamber.

4.9.4.2 Station Inlet / Outlet Isolation Valve Chambers

The Station Isolation Valve Pits are used to isolate the station for maintenance and shutdown purposes. Pressure and temperature instrumentation installed in these pits are used in conjunction with flow meters by the Pipeline Monitoring System for Leak Detection.

4.9.4.3 Density Hut HP Routing Panel

The Density Hut HP Routing Panel is installed where HP switching facilities are required at a particular station and where they are required to be based on hydrometer readings as taken within the Density Hut. The HP Routing Panel provides the following functionality:

4.9.4.3.1 Command Push-Buttons

The interface makes provision for the operator to issue the following commands to the control system, on an individual sequence basis:

1. Route xx Online (XS121) - integral P/Button / Lamp (Green)
2. Route xx Offline (XS122) - integral P/Button / Lamp (Red)

All command buttons comprise of an integral push-button/lamp facility, the lamp being lit when the command button is enabled (as per the MDS Interface):

4.9.4.3.2 Indication Lamps

The interface makes provision for the following status indications from the control system to the operator, on an individual sequence basis:

1. Route xx Online sequence available (XI121) - Lamp (Green). Lit when all associated actuated valves are either available or in their correct state and all associated ZV's are in their correct state.
2. Route xx Offline sequence available (XI122) - Lamp (Red). Lit when all associated actuated valves are either available or in their correct state and all associated ZV's are in their correct state.
3. Route xx running/online (XI803) - Lamp (Green). Flashes when the route is in the process of being opened. Changes to steady state on when the route has been successfully put online.
4. Route xx running/offline (XI804) - Lamp (Red). Flashes when the route is in the process of being closed. Changes to steady state on when the route has been successfully put offline.
5. Sequence Fault (XI805) - Lamp (Red). Lit when the selected sequence is in Fault condition.

4.9.4.4 No Valid Flow Path Interlock

If a No Valid Flow Path alarm condition is detected, a group NO FLOW PATH bit is set and used to transmit an Emergency Shutdown (ESD) alarm to the Master Control Centre, in order to initiate an orderly shutdown of the line (Refer to Section 4.20.5.1 General Device Group for details).

4.9.4.5 Flow and Sonic Velocity

The Krohne flow meters have two configurable output signals.

Analogue signal
This signal is set to provide the sonic velocity to the PLC as an analogue input. The sonic velocity is displayed only.

Digital signal
This signal is set to provide the flow to the PLC as a high-speed pulse input. A high-speed counter card reads volume as 1 pulse per litre. The volume is converted to flow in the counter card. Meter correction is not required.

The flow is displayed on the SCADA. It is also used for the flow control of the control valve.

4.9.4.6 Interface Detection

The remote density is currently used to detect interfaces on the multi-products line, based on rate of change. Every 30 seconds the current density is compared to the previous density (from 30 sec before). Should there be a deviation larger then a pre-configured set point, a change in density is detected and a bit "Interface detected" is set. This bit will be reset when the deviation falls to below the pre-configured set point.

The "Interface detected" bit will generate a one cycle flag "Start flush" that will start the flushing sequence of the receiver, launcher, mainline pumps and sump if these groups are available and in automatic mode.

A period of 2 minutes [configurable in PLC] after the "Interface detected" bit goes low, a bit "Interface passed" is indicated. This bit indicates that the interface has passed, and the flush sequences will complete the flush.

"Interface detected" is sent to the SCADA and is used for line colouring to indicate that an interface is in the line.

4.9.4.7 Station Efficiency Calculations

Station Efficiency is calculated by the system and displayed in the Station Overview Graphic. Where station efficiency data is not provided by the Pipeline Monitoring System (PLMS), the following formula may be used to calculate the Station Efficiency:

Efficiency = Hydraulic Power / Electric Power

Hydraulic Power = Station Flow * 0.000022(Station Discharge Pressure – Station Suction Pressure)

Electrical Power = Voltage * 0.0023199*(Pump1 Current * Power Factor +Pump2 Current * Power Factor + Pump3 Current * Power Factor + Pump4 Current * Power Factor)

4.9.4.8 HP Routing Online Sequence

The HP Routing On-line Sequence is activated on receipt of –

- an Online Request from the SCADA
- an Online Request from the Density hut

A check is undertaken to ascertain if the HP Routing Group is "Ready". If so, the associated HP Routing valves are opened or closed as required. (Refer to typical HP Routing Sequence flowcharts at the end of this chapter). If the group is not "Ready", the sequence cannot be initiated.

When the HP Routing Online sequence is initiated, the strainer software will also be enabled.

All faults during the online process shall result in the Sequence aborting, complete with all associated alarming and event logging procedures.

4.9.4.9 HP Routing Offline Sequence

The HP Routing Off-line Sequence is activated on receipt of –

- an Offline Request from the SCADA
- an Offline Request from the Density hut

A check is undertaken to ascertain if the HP Routing Group is "Ready". All Mainline Pumps are stopped. Associated HP Routing valves are closed and opened as required. (Refer to typical

HP Routing Sequence flowcharts at the end of this chapter). If the group is not "Ready", the sequence cannot be initiated.

When the station is taken offline, the strainer flow path will remain. This implies that the operator needs to change to manual and close the flow path should he want to close all valves.

Any faults encountered during the running of the offline sequence will result in the sequence continuing to completion. Device faults during offline shall be used to continue the Sequence, complete with all associated Alarming and Event Logging procedures.

4.9.4.10 Strainer Control

The intention of the dual strainers is to provide a flow path through one strainer leg at all times. This is achieved by monitoring the pressure differential across each strainer and by placing the standby strainer leg on line as required, provided the HP Routing Group is in automatic and the standby strainer leg is available.

Bumpless transfer will be achieved when changing the group between automatic and manual modes.

Strainer leg 1 will be the default in the case that all strainers are closed and available. If a flow path exists the software will only switch when a strainer becomes blocked.

The strainer software will open the actuated valves associated with Strainer S 01 if strainer S 01 leg is available. If it is not available, the actuated valves associated with Strainer S 02 will be opened, provided Strainer S 02 leg is available.

A strainer high differential pressure (delayed by 5 sec) is latched which is indicated on the SCADA. In case of a high differential pressure the dual strainer sequence will open the flow path through the standby strainer leg. As soon as the standby strainer leg is open, closing the relevant actuated valve closes the blocked strainer leg.

Strainer alarm and trip set points will be latched, and reset at Engineering/Technician level provided that the Strainer valves are closed and then opened (to indicate that the Strainer basket has been cleared) i.e. to reset the high differential pressure, the operator will have to close the valves on both sides of the dirty strainer.

Alarm and trip set points shall be so configured so as to give the operator enough time to take corrective action on receipt of the alarm.

Any condition Local / Fault / Manual which prohibits the strainer software from performing a switch, will result in the strainer software being disabled and will generate a warning message on the group display "Strainer Software disabled".

4.9.4.11 Strainer Fault

In the event that the duty Strainer Hi Hi Differential Pressure trip set point is exceeded and assuming that the standby strainer is not available or on line (in the event of dual strainers), an Emergency Shutdown (ESD) alarm will be issued to the Master Control Centre in order to initiate an orderly shutdown of the line.

4.9.5 DEVICE GROUP AVAILABILITY

The following conditions will render the HP Routing Device Group "Not available" and automatic control via the PLC will be inhibited if:

- HP Routing Valves in Local/Fault States
- Flow path through all Strainers do not exist or are Not Available.
  Individual strainer leg availability is defined as a valid flow path through the strainer (i.e. a strainer's actuated valve either being available or open, and the ZV valve being open) and no latched high DP trip condition existing on the strainer.
- Any routing hand valves with incorrect status

The strainers, although handled as a separate group are in fact part of the HP Routing group. Therefore it must be noted that the automatic/manual selection depends upon the parent group i.e. HP Routing.

4.9.6 ALARM STRATEGIES

The following conditions will result in alarms being issued.

4.9.6.1 Interface Detected

On detection of an interface, an alarm shall be issued.

4.9.6.2 Strainer Fault

If the duty strainer indicates a high differential pressure, an alarm shall be issued. This alarm is reset once both the strainer valves are closed.

4.9.6.3 Intruder Alarm – Remote & Local Chambers

On detection of an Intruder alarm from either the remote or local chambers, an associated Intruder alarm will be activated on the SCADA.

4.9.6.4 High Level Alarm – Remote & Local Chambers

On detection of a high level within either the remote or local chambers, an associated High Level alarm will be activated on the SCADA.

4.9.6.5 EPV Valve Leak Detect

An alarm is generated if flow switch (FS xx1) is activated after the associated EPV Valve/s are closed or opened (i.e. fully seated) and after a configurable time delay has elapsed.

4.9.7 INTERLOCKING STRATEGIES

The following interlocking strategies have been defined for the HP Routing Device Group:

4.9.7.1 Hard wired interlocks

None

4.9.7.2 PLC Interlocks

4.9.7.2.1 No Valid Flow path Interlock

Pumps are interlocked off if there is no flow path through the manifold.

4.9.7.2.2 Line Overpressure Interlock: Mainline Pumps – DOL in Series configuration

Protection against line overpressure is performed by constantly monitoring the station discharge pressure. Should the discharge pressure exceed the safe limit [configurable in the PLC], pump sets are prohibited from starting by interlocking non-running pumps off and a

check is undertaken to see which is the last running pump on the Station. This pump is interlocked off irrespective of the mode i.e. automatic, manual or local, and if Ready will run off line. The station discharge pressure is then re-evaluated after an elapsed time (configurable in the PLC - default 5 seconds). Should the pressure still be above the safe limit, the next last-running pump will be interlocked off (and run off line if Ready) and the same process repeated until all Pump sets are interlocked off (and run off line if Ready) or station discharge pressure has fallen within limits.

Line Overpressure Interlock for Mainline Pumps – VSD in Parallel configuration has not yet been defined.

4.9.8 GRAPHIC REPRESENTATION

Control System dependant – refer to LSX and PCS7 Typicals.

Typical HP Routing Group (Single Strainer)

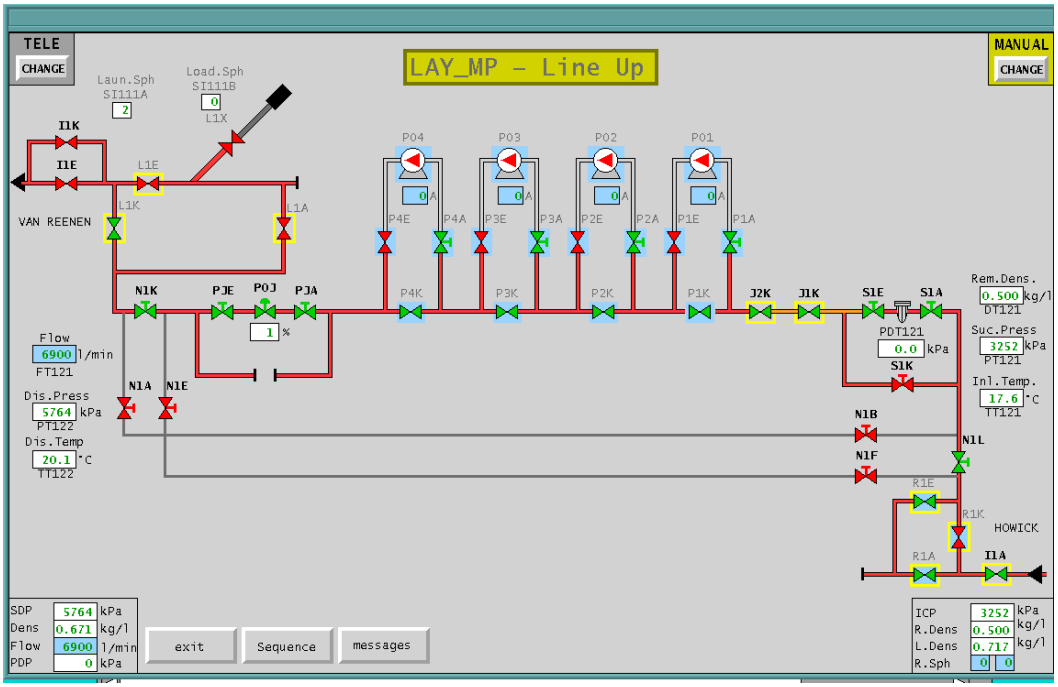

Typical HP Routing Group (Dual Strainer)

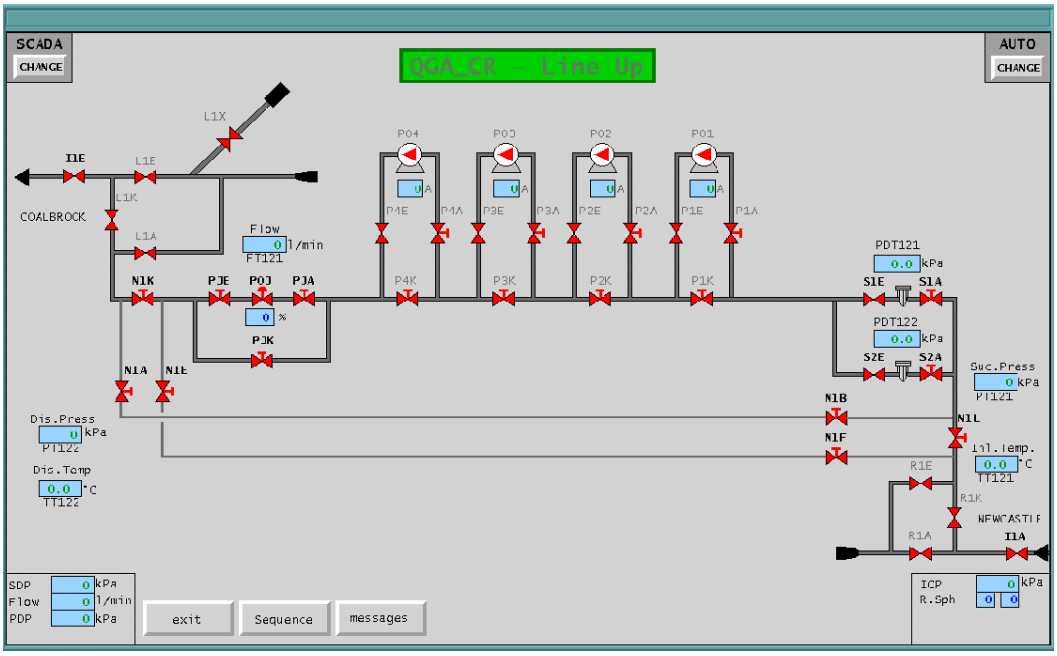

4.9.9 TYPICAL SEQUENCE FLOWCHARTS

Available on request.

4.10 FLOW CONTROL

4.10.1 GROUP DESCRIPTION

4.10.1.1 HP Application

The Flow Control Valve installed after the Pump Manifold is used for closed loop control, to control Station Suction Pressure ICP (Set point configurable by the operator via SCADA), Manifold Flow (Set point configurable by the operator via SCADA) or Station Discharge pressure SDP (fixed set point within the PLC). The Operator can select to control either flow (default) or suction pressure. Preferred control at delivery stations is flow, whilst through and intake stations is ICP control.

This Control and Monitoring functionality shall be achieved via the following devices:

Valves
Mainline Flow Control Valve (PxJ) where x denotes the manifold ID

Instrumentation - HP
Station inlet pressure
Station outlet pressure
Mainline flow

4.10.1.2 LP Application

The Flow Control Valve installed on the respective product LP Delivery Manifolds is used for closed loop control, to control Delivery Flow rates (Set point configurable by the operator via SCADA).

In this regard, the following should be noted:

- SDP is not used
- The PID will by default control flow but the operator can still select to control on ICP.
- The flow needed for control is selected according to the route that is open.
- The initial flow set point of the PID controller is downloaded from the Line-up Screen on issuing of a Start delivery. Once running, the flow set point is under operator control
- During a transition, the flow of the two online meters is added and the flow set point of the Primary Meter is used. When the Transition Route becomes the Primary route, the flow set point from the Line-Up will be sent to the PID controller. Once running, the flow set point is under operator control.

This Control and Monitoring functionality shall be achieved via the following devices:

Valves
Mainline Flow Control Valve (PxJ) where x denotes the manifold ID

Instrumentation - LP
Flow meter

4.10.1.3 Blending Application

The Flow Control Valve installed on the respective Blend Manifolds is used for closed loop control, to control Blend Flow rates. The Blend Flow rate set point is calculated from Product Contaminant values as entered by the operator.

This Control and Monitoring functionality shall be achieved via the following devices:

Valves
Mainline Flow Control Valve (PxJ) where x denotes the manifold ID

Instrumentation – Blending
Flow meter

4.10.1.4 Process Control on DOL Start-up Application

The Flow Control Valve installed on the discharge side of a DOL Mainline pump set, where it is required to limit start up current, it will be set to a predefined position. If the control valve is in automatic, the valve will be positioned automatically to this predefined position should the pump set be not running. Should the valve be in manual, pump set device group will be not available unless the valve is in the correct predefined position.

Once the pump set has started, the valve will be utilised to control the process as detailed in the Applications above.

4.10.2 DEVICE GROUP OBJECT CONTROL

Not applicable.

4.10.3 MODES OF CONTROL

The Flow Control Valve Device Group shall be controllable both locally from the SCADA System installed at the Pump Station as well as remotely from the Master Control Centre in Durban.

4.10.4 MODES OF OPERATION

All devices related to this Device Group shall have the following three Modes of Operation:

- Local
- Manual
- Automatic

4.10.5 GROUP FUNCTIONALITY

4.10.5.1 Non Modulating Actuators

The control valve position is determined by inching and stepping the valve open/ closed.

In the event that the Station Discharge Pressure exceeds the high-pressure trip (UL2) for longer than 30 sec, control will automatically revert to SDP, to protect the line from over pressure. The control loop will now control the discharge pressure according to a set point configured in the PLC for a period of 5 minutes after the discharge pressure drops below the high-pressure trip (UL2). The control loop is then switched back to the selected control i.e. flow or suction pressure.

4.10.5.2 Modulating Actuators

The control valve position will depend on the manual value entered by the operator on the Scada system. In manual the SDP PID limiter does not have an effect on the actual control valve position.

Flow control is achieved with three PID control blocks:

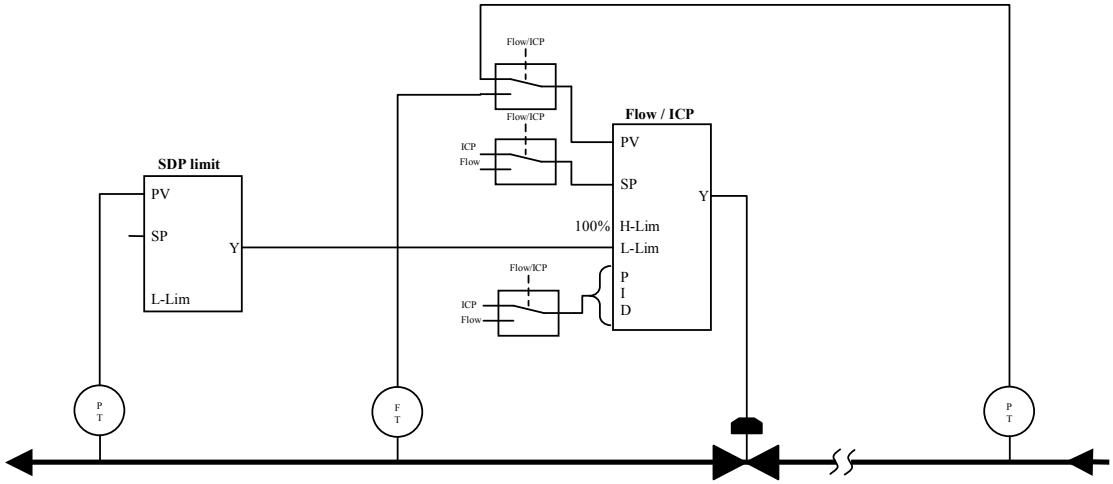

4.10.5.2.1 Flow / ICP PID

This PID will adjust the control valve position, according to the Station Incoming Pressure (Set point configurable by the operator via SCADA) or Manifold Flow (Set point configurable by the operator via SCADA). The Operator can select to control either Flow or ICP.
If neither flow nor ICP has been selected, the selection will default according to the parameterisation in the PLC - all delivery stations will default to Flow control, and all through/intake stations to ICP control.

Note that there is only one PID for Flow/ICP but the actual value, set point and PID control parameters are switched according to the selected control mode i.e. Flow or ICP. If the operator changes between Flow or ICP the PID parameters will be switched and the PID will control on the new parameters. **Switching between Flow and ICP is not bumpless and it is the operator's responsibility to ensure that the set points are correct.** The operator has the freedom to change the set points at any time. In automatic mode the manual value is tracked according to the actual valve position. This facilitates bumpless transfer between automatic and manual mode.

The SDP controller limits the flow/ICP PID's low limit for the output in both manual and automatic mode via the low limit (L-lim) input. This will limit the control valve opening in the case of a high discharge pressure.

4.10.5.2.2 SDP Controller

To protect the line from a high discharge pressure, there is a SDP controller that will limit the control valve position according to the station discharge pressure – to a fixed set point configured in the PLC. The set point is only displayed on the SCADA. Note that whilst this controller is always set to automatic, it will have no effect should the control loop be placed in manual.

Under normal operating conditions this controller output is set to 0% throttling, allowing the Flow/ICP PID control of the control valve over the full range (i.e. to fully open position). Should the discharge pressure increase to above the discharge pressure set point, the PID output will throttle the control valve to reduce the discharge pressure via the low limit (L-lim) of the Flow/ICP PID.

If the controller output exceeds 5% throttling, SDP control is indicated on the Scada system.

The controller is set to fast react.

4.10.5.2.3 ICP Controller

This controller is only used if Flow is selected. To protect the line from a low suction pressure, there is a SDP controller that will limit the control valve position according to the station suction pressure – to a fixed set point configured in the PLC. The set point is only displayed on the SCADA. Note that whilst this controller is always set to automatic, it will have no effect should the control loop be placed in manual.

Under normal operating conditions this controller output is set to 0% throttling, allowing the Flow/ICP PID control of the control valve over the full range (i.e. to fully open position). Should the suction pressure decrease to below the suction pressure set point, the PID output will throttle the control valve to increase the suction pressure via the low limit (L-lim) of the Flow/ICP PID.

If the controller output exceeds 5% throttling, ICP control is indicated on the Scada system.

The controller is set to fast react.

In automatic mode the PID algorithm calculates the PID output. Depending on the set point entered by the operator on the Scada system and the actual process value, the control valve position is adjusted accordingly.

In automatic the manual value is tracked according to the actual valve position, to enable bumpless transfer form automatic to manual mode. The operator cannot change the manual value in automatic mode.

4.10.6 DEVICE GROUP AVAILABILITY

The Control valve availability is displayed as the group availability.

4.10.7 ALARM STRATEGIES

The following conditions will result in alarms being issued.
None.

4.10.8 INTERLOCKING STRATEGIES

The following interlocking strategies have been defined for the Flow Control Device Group:

4.10.8.1 Hard wired interlocks

None.

4.10.8.2 PLC Interlocks

4.10.8.2.1 LP Application – Common Header/Control Valves

The LP control valve (common) is interlocked closed in the following instances:

- From the Stop Delivery sequence, until the common header valve (XVDxA) is closed
- When the common header valve (XVDxA) is closed, and not in wire-break condition.

4.10.9 GRAPHIC REPRESENTATION

Control System dependant – refer to LSX and PCS7 Typicals.

Modulating Control valve group

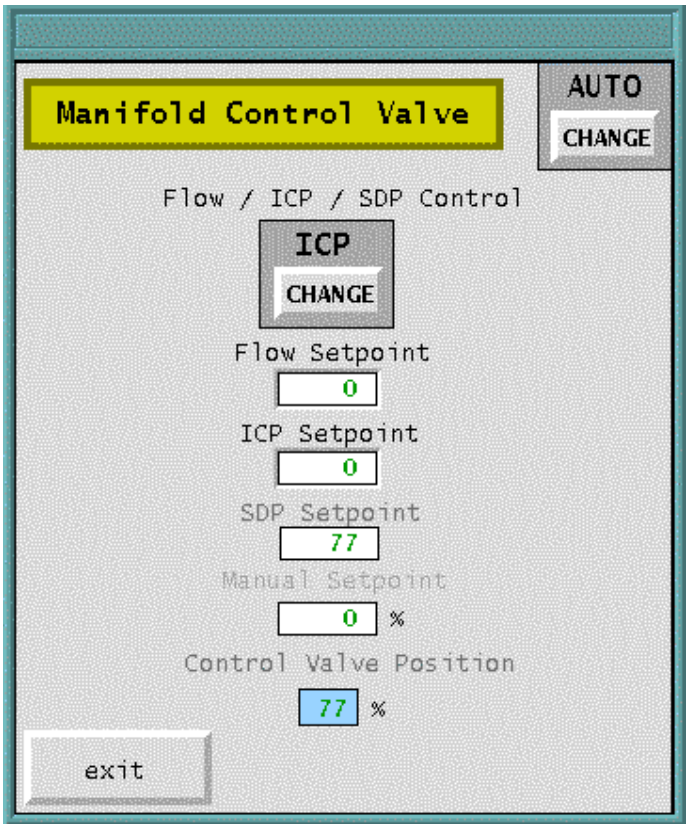
Manifold Control Valve
AUTO
CHANGE
Flow / ICP / SDP Control
ICP
CHANGE
Flow Setpoint
0
ICP Setpoint
0
SDP Setpoint
77
Manual Setpoint
0
%
Control Valve Position
77
%
exit

4.11 SUMP INJECTION (VENTURI)

4.11.1 GROUP DESCRIPTION

Sump Injection facilities may be used to inject intermix from the sump at a controlled flow rate back into the mainline. Intermix Injection back into the mainline is achieved using either venturi injection facilities or sump pump facilities.

Injection of the contents of the Sump is based on the venturi principle, by which a pressure differential across the venturi causes the product from the sump to be injected into the mainline. Motorised actuators are installed on the Injection Inlet, Sump Outlet and Injection Outlet Valves for control purposes. Reverse flow into the Sump Tank is prevented by means of a non-return valve in the Sump Outlet Line.

4.11.1.1 Multi product Injection

A Control Valve (non modulating actuator) is installed on the main injection line before the venturi on all multi-product lines and is used to control the sump injection flow rate to two set points – coarse and fine. Control of this valve is covered under the Injection Control Valve Device Group and is used for open loop control (not PID) with position feedback. In manual the valve position can be set between 0 – 100 % throttling. In automatic there are only two preset positions that can be selected (i.e. coarse or fine).

Control and Monitoring functionality shall be achieved via interface to the following signals:

Valves

Sump Injection Inlet valve	(XV GxA)
Sump Injection Discharge valve	(XV GxE)
Sump Outlet valve	(XV GxB)
Sump injection flow control valve	(CV GxJ) Multi-product lines only
Sump Injection Routing valves (where applicable)	(ZV Gxx)

where x is the manifold ID

Instrumentation

Sump Level	(LTx31)
Injection Control Valve Position Feedback	

where x is the manifold ID

4.11.2 MODES OF CONTROL

The Sump Injection Device Group shall be controllable both locally from the SCADA System installed at the Pump Station as well as remotely from the Master Control Centre in Durban.

4.11.3 MODES OF OPERATION

All devices related to Sump Injection shall have the following three Modes of Operation:

- Local
- Manual
- Automatic

4.11.4 GROUP FUNCTIONALITY

4.11.4.1 Sump High High Level

In the event that the Sump Hi Hi Level trip set point is exceeded, an Emergency Shutdown (ESD) alarm will be transmitted to the Master Control Centre in order to initiate an orderly shutdown of the line.

Alarm and trip set points shall be so configured so as to give the operator enough time to take corrective action on receipt of the alarm.

4.11.4.2 Injection Online Sequence

The Sump Injection On-line Sequence is activated on receipt of –

- an Online Request from the SCADA

A check is undertaken to ascertain if the Injection Group is "Ready" and the sump level is not low. The Injection Inlet and Outlet valves are opened and when open, the Sump Outlet Valve is opened. If the group is not “Ready”, the sequence cannot be started.

Whilst running on line, any faults that occur (relating to valve status) shall result in the sequence aborting, complete with all associated alarming and event logging procedures.

4.11.4.3 Injection Offline SEQUENCE

The Injection Off-line Sequence is activated on receipt of –

- an Offline Request from the SCADA
- a Device fault
- a Group fault
- a sump low level LL2

The Sump Outlet valve, the Injection Inlet and Injection Outlet Valves are closed simultaneously completing the offline sequence.
Any faults encountered during the running of the offline sequence will result in the sequence continuing to completion. Device faults during offline shall be used to continue the Sequence, complete with all associated Alarming and Event Logging procedures.

4.11.4.4 Flushing Control

The Injection Flushing Sequence is activated on –

- Receipt of a Flush Request from the SCADA
- Receipt of a Manifold Flush Request from the SCADA Overview Screen
- Detection of an incoming interface (“Interface detected”)
- Change in product. Refer to Section 4.9.4.6 HP Routing Group Interface Detection for details.

The Injection flushing sequence can only be initiated if the Injection Group is not on line.

A check is undertaken to ascertain if the Injection Group is "Ready". The Inlet and Outlet Valves are automatically opened. If the group is not “Ready”, the sequence cannot be initiated.

If an incoming interface initiated flushing, the sequence will continue after the interface has passed through the station (“Interface passed”) as detected by the Remote Densitometer - DT x21 being stable. After an elapsed time [configurable in the PLC, default 60 seconds] expired, the inlet and outlet valves are closed. This will complete the flushing sequence.

If the operator initiated the sequence, the Injection will be flushed for a predetermined time [configurable in the PLC, default 120 min]. Once this flushing time has expired, a check is made to see if an interface is still detected by the Remote Densitometer - DT x21 being stable. If an interface is still detected the flushing sequence will continue until the interface passed through the station as described above. If no interface is detected, the Inlet and Outlet valves are closed. This will complete the flushing sequence.

All faults during the flushing process shall result in the Sequence aborting, complete with all associated alarming and event logging procedures.

4.11.5 DEVICE GROUP AVAILABILITY

The following conditions will render the Injection Device Group "Not available" and automatic control via the PLC will be inhibited if:

- Injection Valves in Local/Fault Status
- Sump level Low (LL2)
- Sump Level faulty
- ZV Valves in incorrect position

4.11.6 ALARM STRATEGIES

The following conditions will result in alarms being issued.

4.11.6.1 Sump Hi Level

If the sump indicates a high level, an alarm shall be issued.

4.11.7 INTERLOCKING STRATEGIES

The following interlocking strategies have been defined for the Sump Injection Device Group:

4.11.7.1 Hard wired interlocks

None.

4.11.7.2 PLC Interlocks

4.11.7.2.1 Sump Low Level

The Sump Outlet Valve is interlocked to the Sump Level Transmitter LL2 in order to prevent air being injected into the Mainline, in the event of the Sump running empty. The valve will be interlocked closed in manual, or run offline in automatic.

4.11.7.2.2 Intermix Routing

An Intermix delivery will take precedence over Sump Injection, by interlocking the Sump Outlet valve closed in manual or running the Sump Injection Group off line in automatic.

4.11.8 GRAPHIC REPRESENTATION

Control System dependant – refer to LSX and PCS7 Typicals.

Typical Sump Injection (Venturi) Group

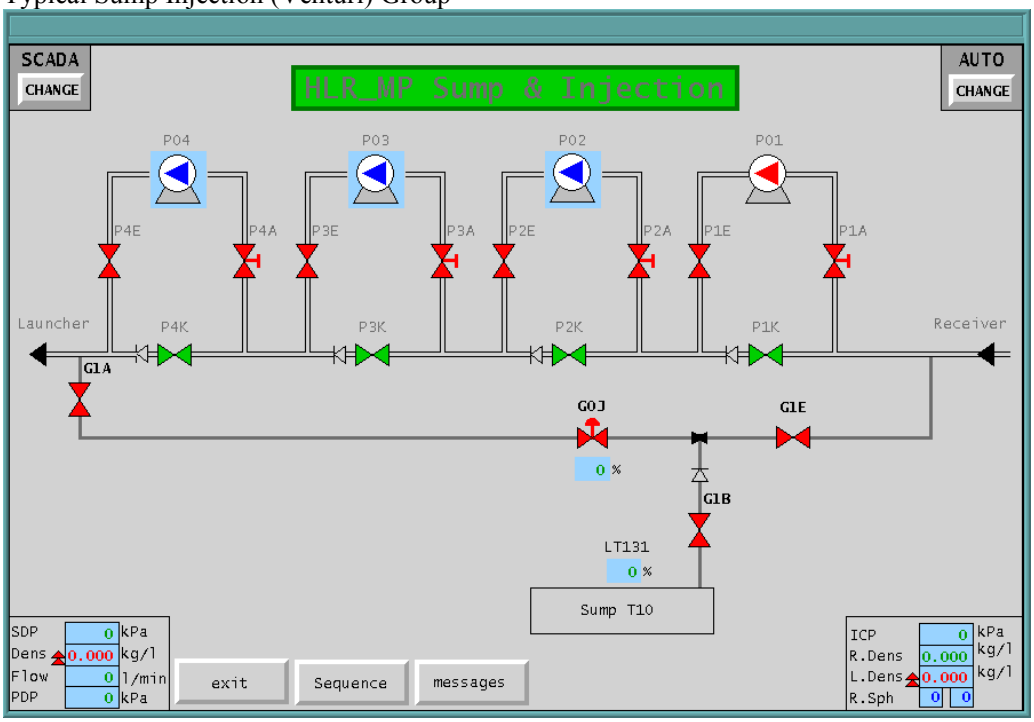

4.11.9 TYPICAL SEQUENCE FLOWCHARTS

Available on request.

4.12 SUMP INJECTION (SUMP PUMP)

4.12.1 GROUP DESCRIPTION

Sump Injection facilities may be used to inject intermix from the sump at a controlled flow rate back into the mainline. Intermix Injection back into the mainline is achieved using either venturi injection facilities or sump pump facilities.

In order to effect control, a motorised actuator is installed on the Injection Discharge Valve. Reverse flow into the Sump Tank is prevented by means of a non-return valve in the Sump Outlet Line.

Control and Monitoring functionality shall be achieved via the following devices:

Valves and pumps

Sump pump	(X01)
Sump Injection Discharge valve	(GxE)
Sump Injection Routing valves (where applicable)	(ZV Gxx)

where x is the manifold ID

Instrumentation

Sump Level	(LTx31)
Sump Pump Flow Switch	(FS x31)

4.12.2 MODES OF CONTROL

The Sump Injection Device Group shall be controllable both locally from the SCADA System installed at the Pump Station as well as remotely from the Master Control Centre in Durban.

4.12.3 MODES OF OPERATION

All devices related to Sump Injection & Intermix Transfer shall have the following three Modes of Operation:

- Local
- Manual
- Automatic

4.12.4 GROUP FUNCTIONALITY

4.12.4.1 Sump High High Level

In the event that the Sump Hi Hi Level trip set point is exceeded, an Emergency Shutdown (ESD) alarm will be transmitted to the Master Control Centre in order to initiate an orderly shutdown of the line.

Alarm and trip set points shall be so configured so as to give the operator enough time to take corrective action on receipt of the alarm.

4.12.4.2 Injection Online Sequence

The Sump Injection On-line Sequence is activated on receipt of –

- an Online Request from the SCADA

A check is undertaken to ascertain if the Injection Group is "Ready" and the sump level is not low. The discharge valve is opened and when fully open, the Sump pump is started. If the group is not “Ready”, the sequence cannot be initiated.

Whilst running on line, any faults that occur (relating to valve and pump status) shall result in the sequence aborting, complete with all associated alarming and event logging procedures.

4.12.4.3 Injection Offline sequence

The Injection Off-line Sequence is activated on receipt of –

- an Offline Request from the SCADA
- a Device fault
- a Group fault
- a sump low level LL2

The sump pump is stopped and then the discharge valve is closed completing the offline sequence.

Any faults encountered during the running of the offline sequence will result in the sequence continuing to completion. Device faults during offline shall be used to continue the Sequence, complete with all associated Alarming and Event Logging procedures.

4.12.4.4 Flushing Control

Not applicable.

4.12.5 DEVICE GROUP AVAILABILITY

The following conditions will render the Injection Device Group "Not available" and automatic control via the PLC will be inhibited:

- Injection Valve/Pump in Local/Fault Status
- Sump level Low (LL2)
- Sump Level faulty
- ZV Valves in correct position

4.12.6 ALARM STRATEGIES

The following conditions will result in alarms being issued.

4.12.6.1 Sump Hi Level

If the sump indicates a high level, an alarm shall be issued.

4.12.6.2 Sump Pump No Flow

If the sump pump flow switch indicates a no flow condition after a configurable time period has elapsed after the pump was started, an alarm shall be issued.

4.12.7 INTERLOCKING STRATEGIES

The following interlocking strategies have been defined for the Sump Injection Device Group:

4.12.7.1 Hard wired interlocks

None.

4.12.7.2 PLC Interlocks

4.12.7.2.1 Sump Low Level

The Sump Pump is interlocked to the Sump Level Transmitter LL2 in order to prevent air being injected into the Mainline, in the event of the Sump running empty. The pump will be interlocked off in manual, or run offline in automatic.

4.12.7.2.2 No Valid Flow Path

The sump pump is interlocked to the No Flow Switch. The pump will be interlocked off if there is no flow after the pump has been running for a configurable time, in the PLC.

4.12.7.2.3 Intermix Routing

An Intermix delivery will take precedence over Sump Injection, by interlocking the Sump Outlet valve closed in manual or running the Sump Injection Group off line in automatic.

4.12.8 GRAPHIC REPRESENTATION

Control System dependant – refer to LSX and PCS7 Typicals.

Sump Injection Group

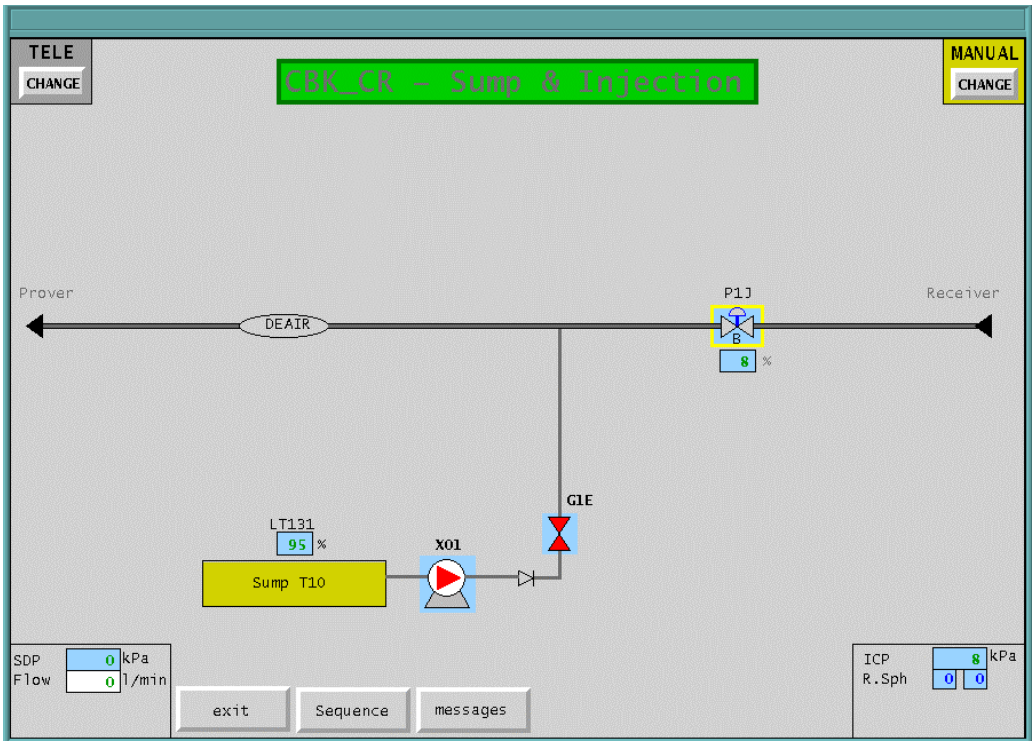

4.12.9 TYPICAL SEQUENCE FLOWCHARTS

Nil.

4.13 INTERMIX TRANSFER (SUMP PUMP)

4.13.1 GROUP DESCRIPTION

Intermix Transfer facilities may be used to transfer intermix from the sump to an Intermix tank. Product is then usually road tanker loaded out of the depot and transported to the IRP Refractionator Plant for processing.

Control and Monitoring functionality shall be achieved via the following devices:

Valves and pumps

Sump pump	(X01)
Intermix tank inlet valve	(XV TxA)
Sump Transfer Routing valves (where applicable)	(XV/ZV Gxx)

where x is the manifold ID

Instrumentation

Sump Level	(LTx31)
Sump Pump Flow Switch	(FS x31)
Intermix Tank Level Transmitter	(LTx32)

4.13.2 MODES OF CONTROL

The Intermix Transfer Device Group shall be controllable both locally from the SCADA System installed at the Pump Station as well as remotely from the Master Control Centre in Durban.

4.13.3 MODES OF OPERATION

All devices related to Intermix Transfer shall have the following three Modes of Operation:

- Local
- Manual
- Automatic

4.13.4 GROUP FUNCTIONALITY

4.13.4.1 Intermix Tank High-High Level

An independent SIL Rated Overfill Protection system will interlock the tank inlet valve closed in the event that a high-high level is reached, independently of the Control System.

4.13.4.2 Sump Tank High-High Level

In the event that the Sump Hi Hi Level trip set point is exceeded, an Emergency Shutdown (ESD) alarm will be transmitted to the Master Control Centre in order to initiate an orderly shutdown of the line.

Alarm and trip set points shall be so configured so as to give the operator enough time to take corrective action on receipt of the alarm.

4.13.4.3 INTERMIX Transfer Online Sequence

The Intermix Transfer On-line Sequence is activated on receipt of –

- an Online Request from the SCADA

A check is undertaken to ascertain if the Transfer Group is "Ready". The Intermix tank inlet valve is opened and when fully open, the Sump pump is started. If the group is not "Ready", the sequence cannot be initiated.

Whilst running on line, any errors that occur (relating to valve and pump status) shall result in the sequence aborting, complete with all associated alarming and event logging procedures.

4.13.4.4 INTERMIX transfer Offline sequence

The Intermix Transfer Off-line Sequence is activated on receipt of –

- an Offline Request from the SCADA
- Pump faulty (X01)
- Intermix tank inlet valve faulty (XVT1A)
- Sump level Low (LT131)
- Intermix tank level high (LT851)

The sump pump is stopped, and when the stopped feedback is received, the intermix tank inlet valve is closed, completing the offline sequence.

Any faults encountered during the running of the offline sequence will result in the sequence continuing to completion. Device errors during offline shall be used to continue the Sequence, complete with all associated Alarming and Event Logging procedures.

4.13.5 DEVICE GROUP AVAILABILITY

The following conditions will render the Intermix Transfer Device Group "Not available" and automatic control via the PLC will be inhibited if:

- Intermix Inlet valve in Local/Fault Status
- Intermix Tank Level High
- Sump Level Low (LL2)
- Sump level Faulty
- Sump Pump Local/Fault Status

4.13.6 ALARM STRATEGIES

The following conditions will result in alarms being issued.

4.13.6.1 Sump Hi Level

If the sump indicates a high level, an alarm shall be issued.

4.13.6.2 Intermix Tank Normal Fill and Hi Levels

If the Intermix Tank indicates a normal fill or high level, an alarm shall be issued. Alarm and trip set points shall be so configured so as to give the operator enough time (currently set at 5 mins of design flow rate) to take corrective action on receipt of the alarm.

4.13.6.3 Sump Pump No Flow

If the sump pump flow switch indicates a no flow condition after a configurable time period has elapsed after the pump was started, an alarm shall be issued.

4.13.7 INTERLOCKING STRATEGIES

The following interlocking strategies have been defined for the Sump Injection Device Group:

4.13.7.1 Hard wired interlocks

None.

4.13.7.2 PLC Interlocks

4.13.7.2.1 Sump Low Level

The Sump Pump is interlocked to the Sump Level Transmitter LL2. The pump will be interlocked off in manual, or run offline in automatic.

4.13.7.2.2 Sump Pump No Flow

The Sump Pump is interlocked to the No-flow switch. The pump will be interlocked off in manual, or run offline in automatic if there is no flow after the pump has been running for a configurable time set in the PLC.

4.13.7.2.3 Intermix Tank High Level

The sump pump will be interlocked off in the event that the Intermix High level setpoint is exceeded. The pump will be interlocked off in manual, or run offline in automatic.

Note that an independent SIL Rated Overfill Protection system will interlock the intermix tank inlet valve closed, in the event that a high-high level is reached.

4.13.8 GRAPHIC REPRESENTATION

Control System dependant – refer to LSX and PCS7 Typicals.

4.13.9 TYPICAL SEQUENCE FLOWCHARTS

Nil.

4.14 SUMP FLOW CONTROL

4.14.1 GROUP DESCRIPTION

A control valve (non modulating actuator) is used to control injection flow from the sump in multi-product installations.

Control and Monitoring functionality shall be achieved via interface to the following signals:

Valves
Sump injection control valve (CVGxJ)
where x is the manifold ID

4.14.2 MODES OF CONTROL

The Injection Flow Control Valve Device Group shall be controllable both locally from the SCADA System installed at the Pump Station as well as remotely from the Master Control Centre in Durban.

4.14.3 MODES OF OPERATION

All devices related to this Device Group shall have the following three Modes of Operation:

- Local
- Manual
- Automatic

4.14.4 GROUP FUNCTIONALITY

4.14.4.1 Manual Mode

The control valve position is set by inching and stepping the valve open/ close.

4.14.4.2 Automatic Mode

In this mode, two valve positions may be selected, namely coarse and fine set points. Depending on the set point entered by the operator on the SCADA system, the control valve position is adjusted accordingly.

4.14.5 DEVICE GROUP AVAILABILITY

None.

4.14.6 ALARM STRATEGIES

The following conditions will result in alarms being issued.
None.

4.14.7 INTERLOCKING STRATEGIES

The following interlocking strategies have been defined for the Sump Flow Control Group:

4.14.7.1 Hard wired interlocks

None.

4.14.7.2 PLC Interlocks

None.

4.14.8 GRAPHIC REPRESENTATION

Control System dependant – refer to LSX and PCS7 Typicals.

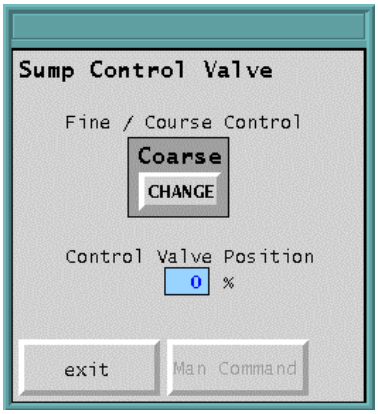

4.15 ELECTRICAL DISTRIBUTION

4.15.1 GROUP DESCRIPTION

The electrical device group comprises of status and tripping signals related to electrical supply on the stations.

4.15.2 MODES OF CONTROL

All devices associated with the Electrical Distribution Device Group are monitored and not controlled (apart from the Incomer OCB's) and hence modes of control have not been assigned.

4.15.3 MODES OF OPERATION

All devices associated with the Electrical Distribution Device Group are monitored and not controlled (apart from the Incomer OCB's) and hence modes of operation have not been assigned.

Incomer OCB's can be tripped from the SCADA both locally at the station and remotely from the Master Control Centre.

4.15.4 GROUP FUNCTIONALITY

Control and Monitoring functionality shall be achieved via interface to the following signals:

Where breaker protection schemas require hard-wired interface to the Control System, Pump Set control will be as follows from PLC:
[Note that these signals are dependent on the type of protection schemas implemented, and are thus subject to change].
[New typicals will need to be developed for NMPP Electrical Equipment].

Links

Closed	CL	(Closed = 1)
Earthed	EL	(Earth Link closed = 1)

Distribution Breaker (Main 1)

Breaker Open	OP	(Breaker open = 1)
Breaker Closed	CL	(Breaker closed = 1)
Breaker in Local	SLO	(Breaker in remote = 1)
Trip circuit fail	TCF	(Healthy = 0)
Master trip relay	MTR	(Healthy = 0)
Open command	O	

Distribution Breaker (Main 2)

Breaker Open	OP	(Breaker open = 1)
Breaker Closed	CL	(Breaker closed = 1)
Breaker in Local	SLO	(Breaker in remote = 1)
Trip circuit fail	TCF	(Healthy = 0)

Master trip relay	MTR	(Healthy = 0)
Overcurrent Trip	OCP	(Healthy = 0)
Earth Fault Trip	ELP	(Healthy = 0)
Balanced Earth Fault Trip	BEF	(Healthy = 0)
Electronic Protection Relay Fail	ERP	(Healthy = 1)
Breaker Racked out	BRS	(Breaker in service = 0)
Low Gas Alarm (SF6 Breakers)	LGP	(Healthy = 0)
Open command	O	
Distribution Breaker (Aux)		
Breaker Closed	CL	(Breaker closed = 1)
Generators E06		
Generator On	EON	(Generator running = 1)
Mains On	EOF	(Generator stopped = 1)
Generator in Local	SLO	(Gen in Automatic = 1)
Fuel low	FLP	(Healthy = 0)
Mechanical trip	TVR	(Healthy = 0)
Battery Charge Fail	E06-BCF	(Healthy = 0)
Transformers Type 1 (Aux, Main without Tap Changer)		
Buchholtz trip	BGF	(Healthy = 1)
Oil temp high	OTP	(Healthy = 1)
Transformers Type 2 (Main with Tap Changer)		
Buchholtz trip	BGF	(Healthy = 1)
Oil temp high	OTP	(Healthy = 1)
Tap Changer Out of Step	OOS	(Healthy = 0)
Protection Relay Fail	ERP	(Healthy = 1)
Electrical Status		
Battery Charge Fail	Fxx-BCF	(Healthy = 0)
ESCOM Power Fail	Fxx-UV	(Power fail = 1)
ESCOM Power Out of Spec	Fxx-NRS	(Out of Spec = 1)

4.15.4.1 Incomer OCB Interlock

Will result in any running Pump Set being interlocked off in manual or run off line in automatic, in the event of all Incomer OCB's not being closed.

4.15.4.2 Station Emergency Stop

In the event that the Station Emergency Stop has been activated (and Incomer Breakers F11/F12 opened), an Emergency Shutdown (ESD) alarm will be issued to the Master Control Centre in order to initiate an orderly shutdown of the line.

4.15.5 DEVICE GROUP AVAILABILITY

None.

4.15.6 ALARM STRATEGIES

The following conditions will result in alarms being issued.
None.

4.15.7 INTERLOCKING STRATEGIES

The following interlocking strategies have been defined for the Electrical Device Group:

4.15.7.1 Hard wired interlocks

4.15.7.1.1 Station Emergency Stop

Station Emergency Stop Push Buttons have been installed at various locations on all Pump Station sites; notably the guard hut, control room and switchgear room (where control and switchgear rooms are situated in separate buildings), for the purposes of tripping the Incomer OCB's in the event of an emergency.

Break glass units are not required to be provided on Pump Station sites supplied from 400VAC Municipal Supplies, there being no requirement to isolate Incomer supply.

4.15.7.2 PLC Interlocks

None.

4.15.8 GRAPHIC REPRESENTATION

Control System dependant – refer to LSX and PCS7 Typicals.

Electrical Overview

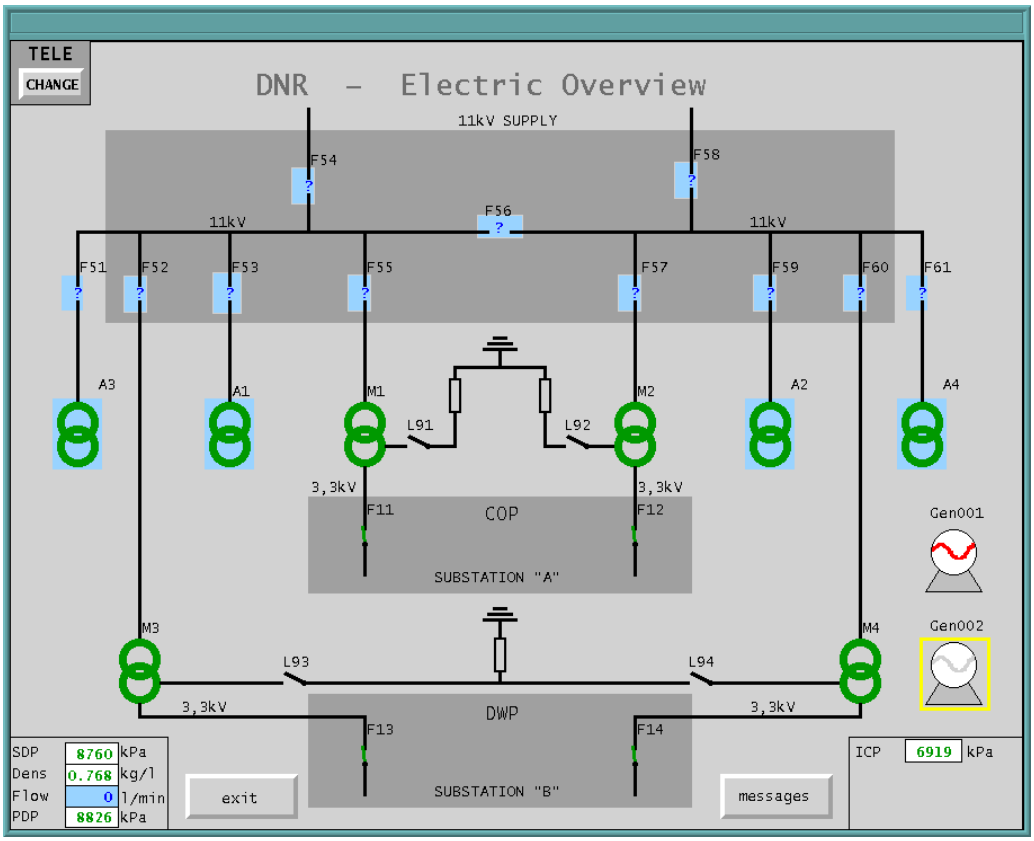
TELE
CHANGE
DNR - Electric Overview
11kV SUPPLY
F54
F58
F56
11kV
11kV
F51
F52
F53
F55
F57
F59
F60
F61
A3
A1
M1
M2
A2
A4
L91
L92
3,3kV
3,3kV
F11
COP
F12
SUBSTATION "A"
Gen001
Gen002
M3
M4
L93
L94
3,3kV
3,3kV
DWP
F13
F14
SUBSTATION "B"
SDP 8760 kPa
Dens 0.768 kg/l
Flow 0 l/min
PDP 8826 kPa
exit
messages
ICP 6919 kPa

4.16 LUBE OIL PUMPS

4.16.1 GROUP DESCRIPTION

The Lube Oil System is used for the lubrication of Pump Set bearings where forced lubrication is required; lube oil being circulated through the Pump Set bearings and back to a lube oil tank. Pump Sets may only be run with lube oil circulation active.

Two lube oil pumps are used (duty and standby) to deliver lubrication oil to the Pump Sets, with either a single flow switch or two pressure switches being used to indicate lube oil flow.

Lube oil pumps, after running for a certain time-period (configured in the PLC) are alternated to achieve equal run hours (duty and standby).

Lube Oil cooling is achieved by means of a heat exchanger, which may include a cooling fan controlled by means of a thermostat (hardwired).

Control and Monitoring functionality shall be achieved via the following devices:

Valves and pumps

Lube Oil Pumps	(Xnn)
where nn is the auxiliary pump ID	

Instrumentation – Type 1

Lube oil flow	(FS x61)
Thermostat	

Instrumentation – Type 2

Lube oil pressure	(PS x61) (PSx62)
Lube oil tank level switch	(LS x61)
Thermostat	

4.16.2 MODES OF CONTROL

The Lube Oil Device Group shall be controllable both locally from the SCADA System installed at the Pump Station as well as remotely from the Master Control Centre in Durban.

4.16.3 MODES OF OPERATION

All devices related to the Lube Oil Device Group shall have the following three Modes of Operation:

- Local
- Manual
- Automatic

4.16.4 GROUP FUNCTIONALITY

4.16.4.1 Automatic

No sequences have been defined for the lube oil system but the two pumps are controlled according to the duty/standby controller typical. Automatic selection of duty and standby status of pumps is based on Run Hour differentials [Configurable in the PLC – Default 100 hours]. Note that each pump will run for a period of twice the set point, i.e. 200 hours.

If the group is ready, the duty controller is activated from a:

- Start sequence Request from the SCADA

An indication “control active” is indicated on the SCADA. The duty controller is now activated and will start and stop the lube oil pumps accordingly.

The duty controller is stopped from a:

- Stop sequence Request from the SCADA
- Manual mode
- Group not available

4.16.4.2 Lube Oil Flow/Pressure

Mainline pumps can only run if the lube oil flow switch is active. If the duty controller is active and the flow switch is not active after a delay of 5 seconds the standby pump is also started. Both pumps are running. The duty controller is switched off (duty control not active). The operator needs to investigate the problem and restart the duty controller or stop the standby pump in manual mode.

If no flow is detected after 15 seconds, the mainline pumps are interlocked off.

4.16.5 DEVICE GROUP AVAILABILITY

The following conditions will render the Device Group "Not available" and automatic Start-up via the PLC will be prevented:

- Any lube oil pump in Local/fault
- Lube oil flow switch indicates no flow after the standby fan was started.

4.16.6 ALARM STRATEGIES

The following conditions will result in alarms being issued.

4.16.6.1 Lube Oil Flow

In the event that no flow/pressure is indicated after a configurable time whilst a lube oil pump is running an alarm will be logged.
Should the lube oil tank level (where installed) fall below the low level, an alarm will be logged.

4.16.7 INTERLOCKING STRATEGIES

The following interlocking strategies have been defined for the Lube Oil Device Group:

4.16.7.1 Hard wired interlocks

None.

4.16.7.2 PLC Interlocks

4.16.7.2.1 NO LUBE OIL FLOW

If no flow is detected for 15 seconds, the mainline pumps are interlocked off.

4.16.8 GRAPHIC REPRESENTATION

Control System dependant – refer to LSX and PCS7 Typicals.

Lube Oil Group (Single Flow Switch)

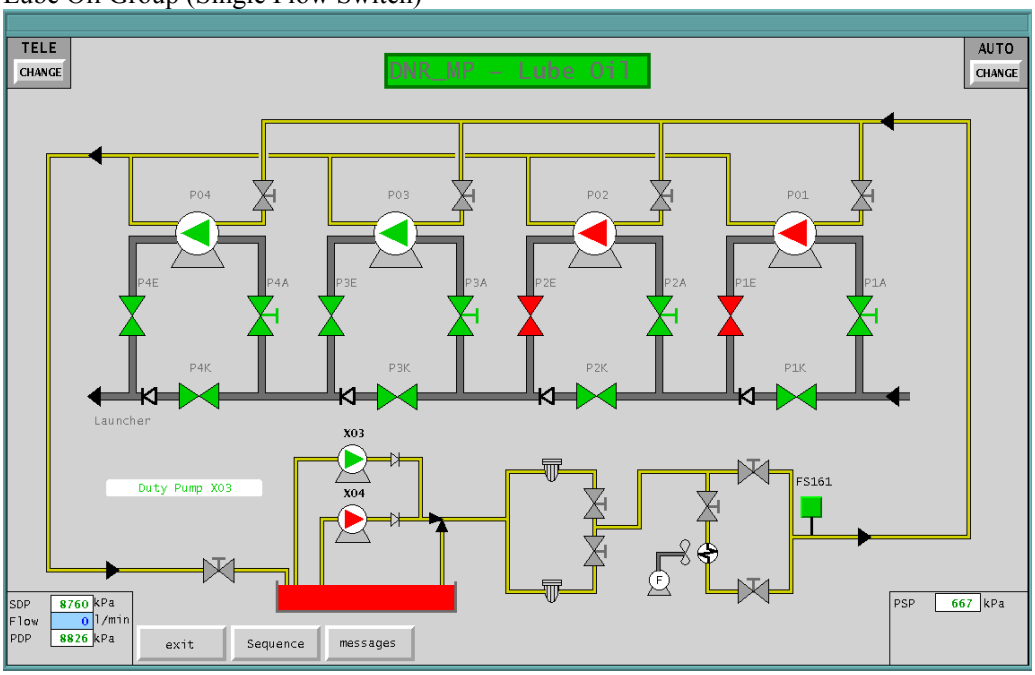

Lube Oil Group (Two Pressure Switches)

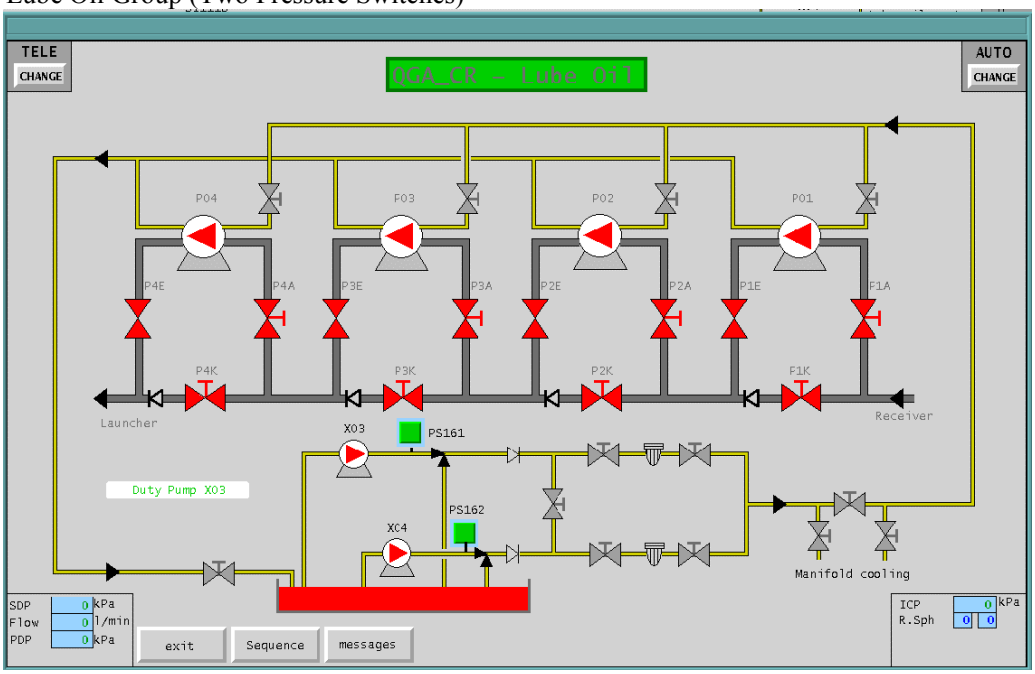

4.17 PURGE AIR FANS

4.17.1 GROUP DESCRIPTION

The Purge Air Fan System is used to for both cooling of the motor windings as well as purging of product vapours for hazardous area classification purposes. Pump sets may only be run with purge air circulation active.

Two Purge Air Fans are used (duty and standby), with dedicated flow switches per pump set indicating the presence of purge airflow. Purge Air Fans, after running for a certain time-period (configured in the PLC) are alternated to achieve equal run hours (duty and standby).

Control and Monitoring functionality shall be achieved via the following devices:

Valves and pumps
Purge Air Fans (Qnn)
where nn is the auxiliary pump ID

Instrumentation – Type 1
Pump 1 airflow switch (FS 011) \
Pump 2 airflow switch (FS 021) | Part of mainline
Pump 3 airflow switch (FS 031) | Pump Set
Pump 4 airflow switch (FS 041) /

Fan 1 current (IT141)
Fan 2 current (IT142)

4.17.2 MODES OF CONTROL

The Purge Air Fan Device Group shall be controllable both locally from the SCADA System installed at the Pump Station as well as remotely from the Master Control Centre in Durban.

4.17.3 MODES OF OPERATION

All devices related to the Purge Air Fan Device Group shall have the following three Modes of Operation:

- Local
- Manual
- Automatic

4.17.4 GROUP FUNCTIONALITY

4.17.4.1 Purge Air Flow

Should two of the mainline pump flow switches indicate no airflow both fans are started. When all flow switches indicate a healthy condition, the operator can stop the purge fan that is not duty in manual mode.

4.17.4.2 Automatic

No sequences have been defined for the purge air fan system but the two purge air fans are controlled according to the duty/standby controller typical as described in Section 4.10.

Automatic selection of duty and standby status of fans is based on Run Hour differentials [Configurable in the PLC – Default 100 hours]. Note that each pump will run for a period of twice the set point, i.e. 200 hours.

4.17.5 DEVICE GROUP AVAILABILITY

The following conditions will render the Device Group "Not available" and automatic Start-up via the PLC will be prevented:

- Any Purge Air fan in Local/fault

4.17.6 ALARM STRATEGIES

The following conditions will result in alarms being issued.

4.17.6.1 Purge Air Flow

In the event that no flow is indicated whilst a purge air fan is running an alarm will be logged.

4.17.7 INTERLOCKING STRATEGIES

The following interlocking strategies have been defined for the Purge Air Fan Device Group:

4.17.7.1 Hard wired interlocks

None

4.17.7.2 PLC Interlocks

None

4.17.8 GRAPHIC REPRESENTATION

Control System dependant – refer to LSX and PCS7 Typicals.

Purge air Group

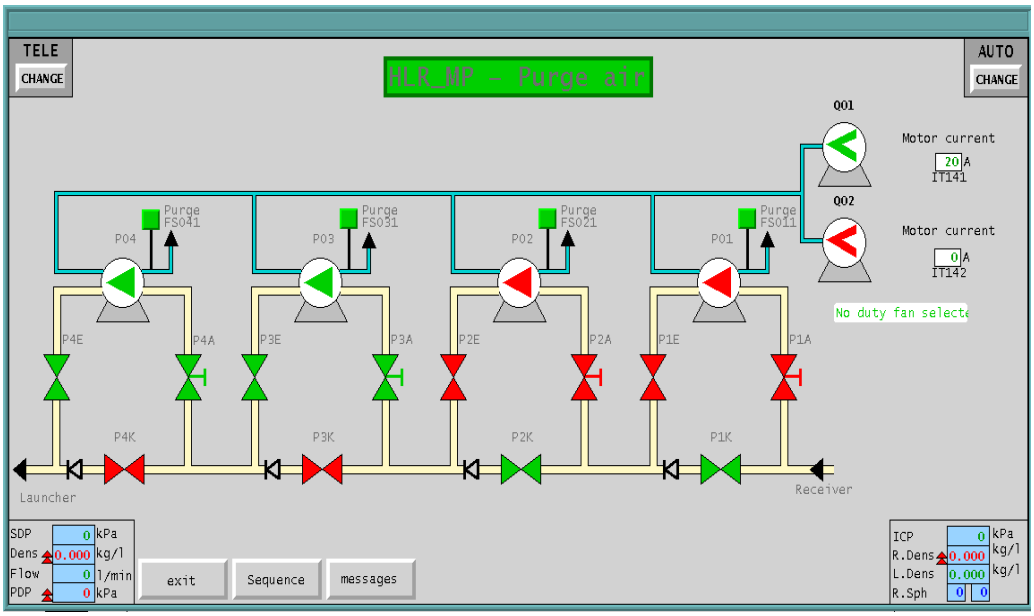
TELE
CHANGE
HLR_MP - Purge air
AUTO
CHANGE
Q01
Motor current
20 A
IT141
Q02
Motor current
0 A
IT142
Purge
FS041
Purge
FS031
Purge
FS021
Purge
FS011
P04
P03
P02
P01
No duty fan selecte
P4E
P4A
P3E
P3A
P2E
P2A
P1E
P1A
P4K
P3K
P2K
P1K
Launcher
Receiver
SDP 0 kPa
Dens 0.000 kg/l
Flow 0 l/min
PDP 0 kPa
exit
Sequence
messages
ICP 0 kPa
R.Dens 0.000 kg/l
L.Dens 0.000 kg/l
R.Sph 0 0

4.18 PRESSURISATION FANS (CONTROL ROOM FANS)

4.18.1 GROUP DESCRIPTION

Pressurisation Fans are used to pressurise control rooms situated within hazardous areas for the purposes of altering the classification of the control rooms to that of safe areas.

Two Pressurisation Air Fans are used (duty and standby), with a differential pressure switch mounted in the control room and used to indicate whether the room is pressurised. Pressurisation Air Fans, after running for a certain time-period (configured in the PLC) are alternated to achieve equal run hours (duty and standby).

Control and Monitoring functionality shall be achieved via the following devices:

Valves and pumps
Pressurisation Air Fans (Qxx)
where xx is the auxiliary pump ID

Instrumentation – Type 1
Differential Pressure Switch (DPS151)
Fan 1 current (IT151)
Fan 2 current (IT152)

4.18.2 MODES OF CONTROL

The Pressurisation Fan Device Group shall be controllable both locally from the SCADA System installed at the Pump Station as well as remotely from the Master Control Centre in Durban.

4.18.3 MODES OF OPERATION

All devices related to the Pressurisation Fan Device Group shall have the following three Modes of Operation:

- Local
- Manual
- Automatic

4.18.4 GROUP FUNCTIONALITY

4.18.4.1 Automatic

No sequences have been defined for the pressurisation fan system but the two pressurisation fans are controlled according to the duty/standby controller typical as described in Section 3.12.

Automatic selection of duty and standby status of fans is based on Run Hour differentials [Configurable in the PLC – Default 100 hours]. Note that each pump will run for a period of twice the set point, i.e. 200 hours.

4.18.5 DEVICE GROUP AVAILABILITY

The following conditions will render the Device Group "Not available" and automatic Start-up via the PLC will be prevented:

- Any pressurisation fan in Local/fault

4.18.6 ALARM STRATEGIES

The following conditions will result in alarms being issued.

4.18.6.1 Pressurisation Fail

In the event that the differential pressure switch in the control room indicates that the pressure between the control room and the pump house differs by less than 60 Pa, an alarm will be issued.

4.18.7 INTERLOCKING STRATEGIES

The following interlocking strategies have been defined for the Device Group:

4.18.7.1 Hard wired interlocks

None

4.18.7.2 PLC Interlocks

4.18.7.2.1 Station Isolation

Should both fans fail to run, the station is isolated after a pre-configured time (Configurable in the PLC- default 15 mins). All PLC outputs are disabled and will only be enabled once a fan has been started in local and has run for a pre-configured time (Configurable in the PLC- default 15 mins).

4.18.8 GRAPHIC REPRESENTATION

Control System dependant – refer to LSX and PCS7 Typicals.

Pressurisation fan Group

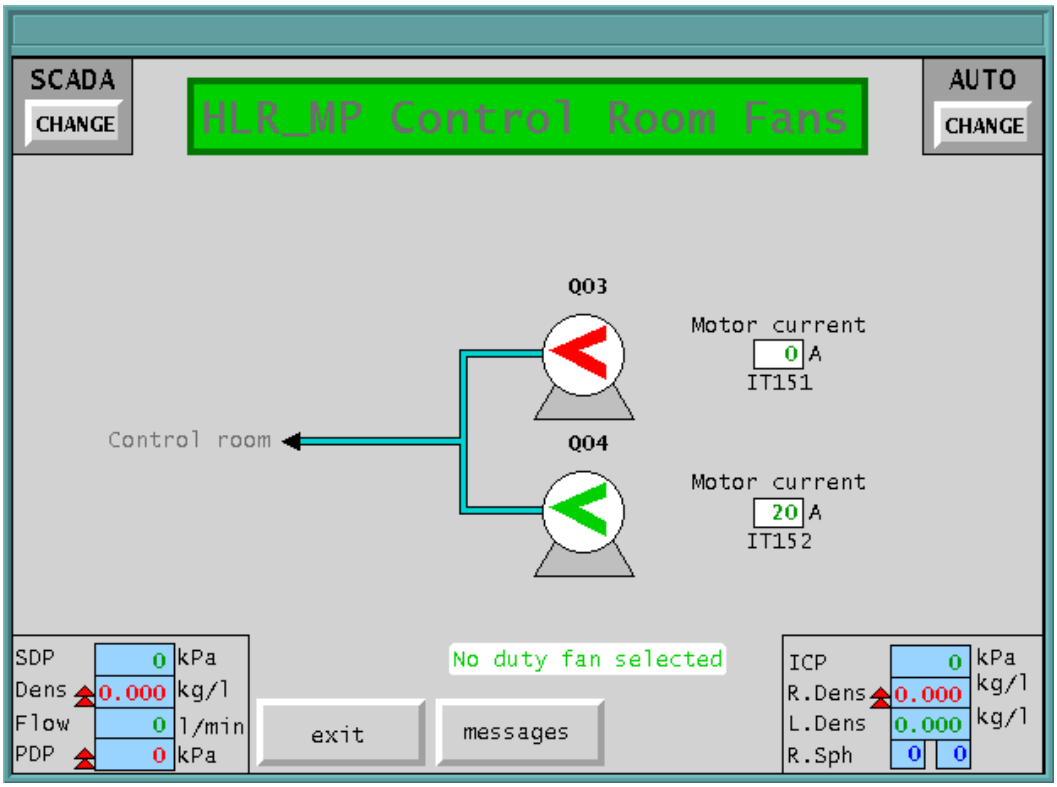
SCADA
CHANGE
HLR_MP Control Room Fans
AUTO
CHANGE
Q03
Motor current
0 A
IT151
Control room
Q04
Motor current
20 A
IT152
SDP 0 kPa
Dens 0.000 kg/l
Flow 0 l/min
PDP 0 kPa
No duty fan selected
exit
messages
ICP 0 kPa
R.Dens 0.000 kg/l
L.Dens 0.000 kg/l
R.Sph 0 0

4.19 INHIBITOR & DRA (DRAG REDUCING AGENTS) INJECTION

4.19.1 GROUP DESCRIPTION

Inhibitor injection is used to deliver a predetermined amount of rust inhibitor into the mainline upstream of the pumpsets, for the purposes of prohibiting corrosion of the pipelines. A variable stroke-dosing pump with a variable speed motor is used to inject inhibitor into the mainline, dependant on the mechanical pump stroke setting and speed of the variable speed drive. Injection rates may be set to vary between 4 ppm to 8 ppm. Inhibitor injection into Avtur is not permitted.

Drag Reducing Agent injection is used to deliver a predetermined amount of drag reducing agent into the mainline downstream of the mainline pump sets and control valves, for the purposes of reducing drag and increasing flowrate. A variable stroke-dosing pump with a variable speed motor is used to inject DRA into the mainline, dependant on the mechanical pump stroke setting and speed of the variable speed drive. Inhibitor injection into Avtur is not permitted.

Separate variable stroke dosing pumps with variable speed motors are used to inject inhibitor and DRA into the mainline.

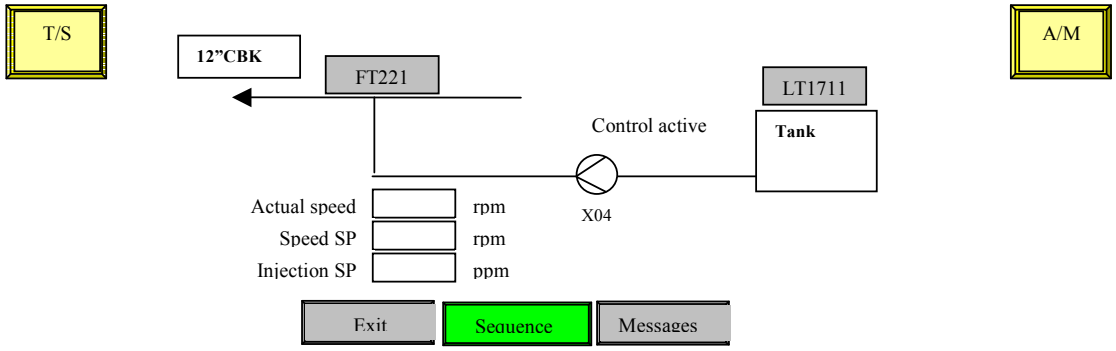

Sequence selection buttons on the SCADA screen.

- Not Available – Yellow Button
- Available – Green Button

Control and Monitoring functionality shall be achieved via the following devices:

Valves and pumps

Injection pump (Xxx)
where xx is the auxiliary pump ID

Instrumentation

Inhibitor/DRA Tank level	LT17x
Inhibitor/DRA motor speed control	Analogue Output (SPxxx_SP)
Inhibitor/DRA motor speed	Analogue Input (SPxxx_ACT)

4.19.2 MODES OF CONTROL

The Inhibitor/DRA Injection Device Group shall be controllable both locally from the SCADA System installed at the Pump Station as well as remotely from the Master Control Centre in Durban.

4.19.3 MODES OF OPERATION

All devices related to the Inhibitor/DRA Injection Device Group shall have the following three Modes of Operation:

- Local
- Manual
- Automatic

4.19.4 GROUP FUNCTIONALITY

4.19.4.1 Inhibitor/DRA Flow Control

If the group is in automatic, Inhibitor/DRA flow is calculated according to the injection rate set point and mainline flow.

The following formula is used to calculate the required Dosing Pump Speed Set point for the variable speed drive:

$$\text{Dosing Pump Speed (revs)} = \frac{\text{Constant x } \textbf{Mainline Flow rate} \text{ x Injection Rate}}{1\,000\,000}$$

Each pump will have its own calculation with a separate Injection rate set point. Injection rate set points will have upper and lower limits configured.

Inhibitor Injection rates may be set to vary between 4 ppm to 8 ppm, with limits of 5 to 8 ppm, included in the formula as a variable.

The Constant is defined as pump displacement expressed as the number of revolutions per litre of product, and is calculated as follows:

$$\text{Constant (revs/litre)} = \frac{\text{No. of Revs/stroke}}{\text{Stroke Displacement (litres) x Mechanical Stroke Setting}}$$

No. of Revs/Stroke is defined in the Dosing Pump Manual
Stroke Displacement is defined in the Dosing Pump Manual
Mechanical Stroke Setting as set on the pump

The actual pump speed is indicated. In manual mode the operator has to set the speed setpoint to the required speed. The speed is not calculated.

4.19.4.2 Sequence Control

If the device is ready, the sequence is activated from a:

- Start sequence Request from the SCADA

An indication “control active” is indicated on the SCADA.

The inhibitor/DRA injection will start if the flow rate (FT221) is greater than 500l/min. and will stop when the flow-rate drops below 400 l/min.

The sequence is stopped from a:

- Stop sequence Request from the SCADA
- Manual mode
- Group not available
- Inhibitor/DRA Tank Low level (LL2)
- Associated HP Route Offline Sequence

4.19.5 DEVICE GROUP AVAILABILITY

The following conditions will render the Device Group "Not available" and automatic control via the PLC will be prevented if:

- Inhibitor/DRA pumps in local /fault status
- Inhibitor/DRA tank low level (LT171)
- Associated HP Route not online
- Associated LP Route not online

4.19.6 ALARM STRATEGIES

The following conditions will result in alarms being issued.
None

4.19.6.1 Low level alarm

If the inhibitor/DRA tank reaches a low level (LT171 Low) an alarm is issued.

4.19.6.2 Low Low level alarm

If the inhibitor/DRA tank reaches a low low level (LT171 Low low) an alarm is issued.

4.19.6.3 Interface Detected Alarm

If inhibitor/DRA is running and an interface is detected an alarm “Inhibitor/DRA active” is triggered.

4.19.7 INTERLOCKING STRATEGIES

The following interlocking strategies have been defined for the Inhibitor Device Group:

4.19.7.1 Hard wired interlocks

None.

4.19.7.2 PLC Interlocks

4.19.7.2.1 LOW LEVEL INTERLOCK

If the inhibitor/DRA tank reaches a low low level, the injection pump is interlocked off.

4.19.8 GRAPHIC REPRESENTATION

Control System dependant – refer to LSX and PCS7 Typicals.

4.20 GENERAL GROUP

4.20.1 GROUP DESCRIPTION

The general device group comprises of status and tripping signals related to the following systems installed on the stations:

- Fire System (monitoring only)
- Siren (control only)
- PLC and ET200 24 VDC Power supplies (monitoring only)
- PLC Rack Faults (monitoring only)
- UPS failure (monitoring only)

4.20.2 PLC I/O INTERFACE

Control and Monitoring functionality shall be achieved via the following signals:

Signals

PLC Panel 24VDC Power Supply 1 failure	Gxx_FA
LV Room 24VDC Power Supply 1 failure	Gxx_FA
Consignee Panel 24VDC Power Supply failure	Gxx_FA
Metering 24VDC Power Supply Failure	Gxx_FA
Comms Panel 24VDC Power Supply Failure	Gxx_FA

Siren

Siren	UA 191

Fire Detection:

- Fire Alarm within predefined areas
- Building Fire System Failure Alarm (Fail and Override combined)
- Fire Water System Failure Alarm
- Fire Water Tank Low Level Alarm
- Foam Tank Low Level Alarm

[Note that Fire System interface is site specific – the above-mentioned signals should be used as a guideline only]. [Note that Fire Systems installed post- 2009 and all associated equipment have been assigned an Instrument Group Identifier of 18. Interface signals to the PLC will carry the same Group ID number].

Auxiliary Signals

UPS Bypass Status (1=Healthy, 0=Faulty)	LV31_BYP

Where UPS status only supports a hardwired interface, the following signals are interfaced to the Control System: UPS failure UPS31_FA

Where UPS status supports a communications interface, the following statuses are interfaced to the Control System:

- UPS Overload
- System Shutdown / Starting
- UPS on Battery

- Battery Low
- Over Temperature
- UPS on Bypass
- UPS General Warning

4.20.3 MODES OF CONTROL

The General Device Group shall be controllable both locally from the SCADA System installed at the Pump Station as well as remotely from the Master Control Centre in Durban.

4.20.4 MODES OF OPERATION

All devices related to the General Device Group shall have the following three Modes of Operation:
No control (Monitoring and alarming only)

4.20.5 GROUP FUNCTIONALITY

4.20.5.1 Emergency shutdown

An Emergency Shutdown (ESD) bit will be generated and transmitted to a central location for an orderly shutdown of the pipe line, on detection of any of the following conditions:

- Receiver - No Valid Flow Path
- Receiver - Fault
- Pump Sets DOL - No Valid Flow Path
- Launcher - No Valid Flow Path
- HP Routing – No Valid Flow Path
- HP Routing – Line Overpressure
- HP Routing – Strainer Fault
- Sump Injection (Venturi) – Sump High Level
- Sump Injection (Sump Pump) – Sump High Level
- Electrical – Station Emergency Stop (both Incomer OCB's open)
- LP Routing General – Strainer Fault and route online (PET, DIE, ULP, Intermix and Blending)
- LP Routing General – Over Pressure Protection whilst delivering
- LP Routing Product Groups – No Valid Flow Path
- Prover – No Valid Flow Path whilst delivering
- Tank Farm – High Level whilst delivering
- General – Fire Detection

4.20.6 DEVICE GROUP AVAILABILITY

Not Required.

4.20.7 ALARM STRATEGIES

4.20.7.1 Fire Detection

On detection of a fire, either within the manifold area, or within the Control Room or Sub Station (via means of the CO2 System), a Fire alarm will be activated on the SCADA, and an ESD Shutdown Bit issued to the ESD System to initiate an orderly shutdown of the line.

4.20.7.2 Fire/CO2 System Failure

On detection of either a Fire or CO2 System failure, a Fire/CO2 System Failure alarm will be activated on the SCADA.

4.20.7.3 Fire Water Tank Low Level

On detection of a Fire Water Tank Low Level, a Fire Water Tank Low Level alarm will be activated on the SCADA.

4.20.7.4 PLC Rack Faults

On detection of a PLC Rack Fault, a PLC Rack Fault alarm will be activated on the SCADA.

4.20.7.5 PLC/ETL 24 VDC Power Supply Fail

On detection of a PLC/ETL 24 VDC Power Supply Failure, a Fail alarm will be activated on the SCADA.

4.20.7.6 UPS Fail

On detection of UPS Failure, a Fail alarm will be activated on the SCADA.

4.20.8 INTERLOCKING STRATEGIES

The following interlocking strategies have been defined for the General Device Group:

4.20.8.1 Hard wired interlocks

None.

4.20.8.2 PLC Interlocks

None.

4.20.9 GRAPHIC REPRESENTATION

Control System dependant – refer to LSX and PCS7 Typicals.

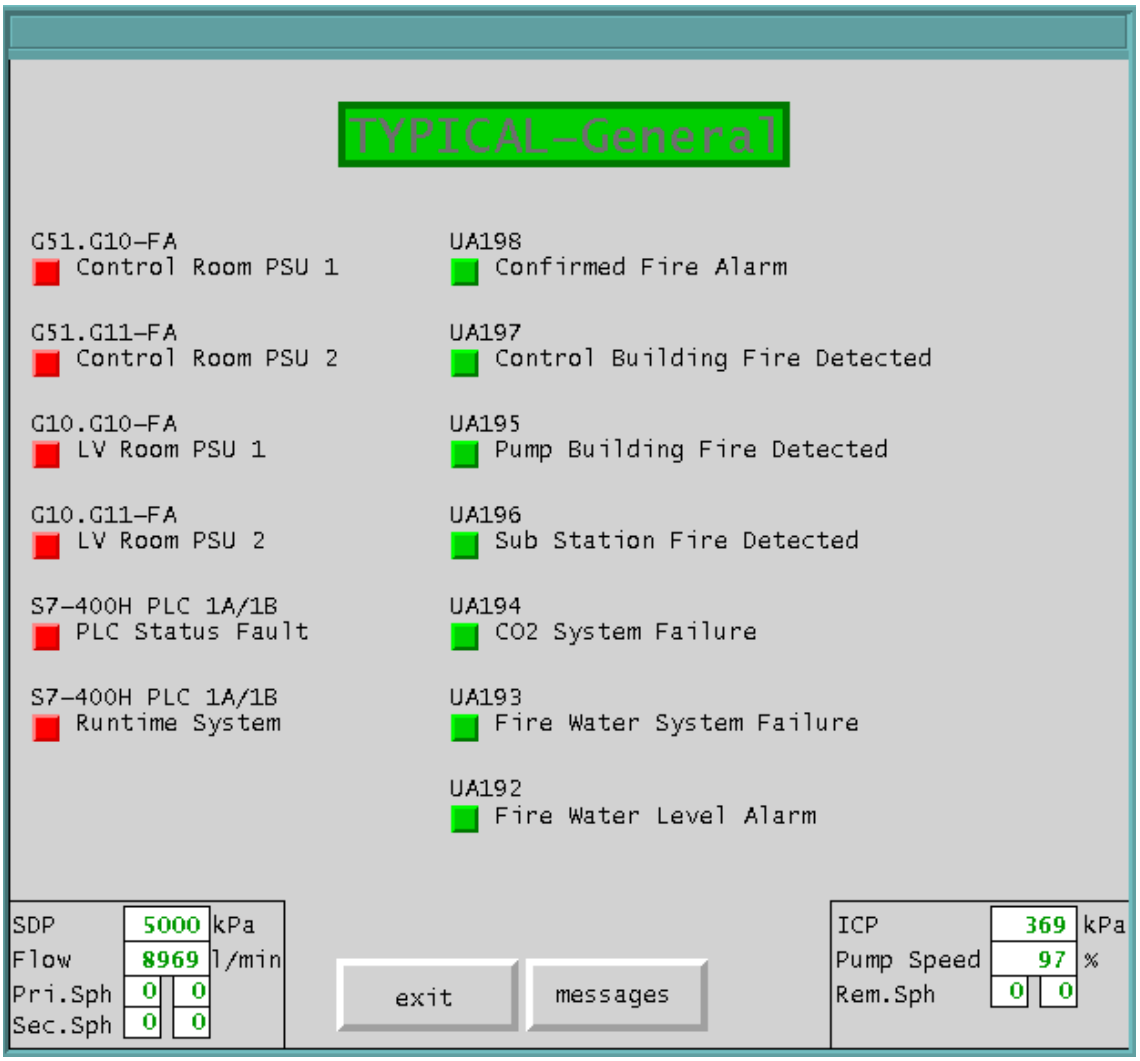
TYPICAL-General
G51.G10-FA
Control Room PSU 1
G51.G11-FA
Control Room PSU 2
G10.G10-FA
LV Room PSU 1
G10.G11-FA
LV Room PSU 2
S7-400H PLC 1A/1B
PLC Status Fault
S7-400H PLC 1A/1B
Runtime System
UA198
Confirmed Fire Alarm
UA197
Control Building Fire Detected
UA195
Pump Building Fire Detected
UA196
Sub Station Fire Detected
UA194
CO2 System Failure
UA193
Fire Water System Failure
UA192
Fire Water Level Alarm
SDP 5000 kPa
Flow 8969 l/min
Pri.Sph 0 0
Sec.Sph 0 0
exit
messages
ICP 369 kPa
Pump Speed 97 %
Rem.Sph 0 0

4.21 LP ROUTING DEVICE GROUP - GENERAL

4.21.1 GROUP DESCRIPTION

Full monitoring and control functionality of all LP manifold operations will be enabled both locally at the pump stations as well as remotely at the Master Control Centre.

LP Routing shall be able to be controlled both manually and automatically.

Control and monitoring functionality shall be achieved via the following devices: (where common to all Product Routing Groups)

- LP Manifold Pressure Protection (Pressure Switch)
- Density Hut Control Panel DH80
- Sample Point flow switches
- Contamination Valve Leak Detection (Flow Switches)
- Flow Relief detection (Flow Switches)
- Dual Strainers - Strainer Inlet and Outlet Valves, Strainer Differential Pressure Transmitters
- LP Header valves

4.21.2 MODES OF CONTROL

The LP Routing Device Group shall be controllable both locally from the SCADA System installed at the Pump Station as well as remotely from the Master Control Centre in Durban.

4.21.3 MODES OF OPERATION

The LP Routing Device Group shall have the following three Modes of Operation:

- Local
- Manual
- Automatic

Note that the Density Hut Routing Panel DH 80 shall only be able to be accessed locally from within the Density Hut.

4.21.4 GROUP FUNCTIONALITY

4.21.4.1 Product Quality

Optical interface detectors (OID) or Sonic Velocity may be used to detect quality (hotspots and interfaces) of product being taken in. Sampling points are also provided on intake and delivery manifolds for continuous and drip sample analysis. Change in status of these sample point switches are treated as messages and not alarms.

4.21.4.2 Dual Strainer Functionality

The intention of the dual strainers is to provide a flow path through one strainer leg at all times. This is achieved by monitoring the pressure differential across each strainer and by placing the

standby strainer leg on line as required, provided the LP Routing Group is in automatic and the standby strainer leg is available.

Bumpless transfer will be achieved when changing the group between automatic and manual modes.

The dual strainer software is enabled when the Open Route sequence from the LP Routing Product Group is started, or a route has been manually opened. To disable the strainer software, a stop delivery sequence is run, or all routes are closed.

To facilitate bumpless transfer between automatic and manual modes, an activate bit has been incorporated. The activate bit is only set when the group is in automatic. For the strainers to be able to do auto flow path switching the Software must be enabled and activated.

The dual strainers are controlled by their own software block, which in turn will give an indication of a flow path and availability.

Strainer leg 1 will be the default in the case that all strainers are closed and available. If a flow path exists the software will only switch when a strainer becomes blocked.

The strainer software will open the actuated valves associated with Strainer S 01 if strainer S 01 leg is available. If it is not available, the actuated valves associated with Strainer S 02 will be opened, provided Strainer S 02 leg is available.

A strainer high differential pressure (delayed by 5 sec) is latched, the latched condition being indicated on the SCADA by means of a red border around the strainer. In case of a high differential pressure the dual strainer sequence will open the flow path through the standby strainer leg. As soon as the standby strainer leg is open, the blocked strainer leg is closed by closing the relevant actuated valve.

Strainer alarm and trip set points will be latched, and reset at Engineering/Technician level provided that the Strainer valves are closed and then opened (to indicate that the Strainer basket has been cleared) i.e. to reset the high differential pressure, the operator will have to close the valves on both sides of the dirty strainer.

Alarm and trip set points shall be so configured so as to give the operator enough time to take corrective action on receipt of the alarm.

Any condition Local / Fault / Manual which prohibits the strainer software from performing a switch, will result in the strainer software being disabled and will generate a warning message on the group display “Strainer Software disabled”.

4.21.4.3 Strainer Fault

In the event that the Strainer Hi Hi Differential Pressure trip set point is exceeded and assuming that the standby strainer is not available (in the event of dual strainers) and assuming the route is online, an Emergency Shutdown (ESD) alarm will be issued to the Master Control Centre in order to initiate an orderly shutdown of the line.

4.21.4.4 Dual Strainer Flushing

Dual Strainers are to be flushed i.e. both placed on line, for the duration of the Intermix Detection bit being set high. Refer to Section 4.22.5.3 LP Product Routing Group for details.

Each products dual strainer is flushed on the following:

- Start Intake command or Intake online condition
- Start Transition command or Transition online condition

4.21.4.5 LP Over Pressure Protection

In the event that an over pressure condition is detected in the LP Manifold, an Emergency Shutdown (ESD) alarm will be issued to the Master control Centre in order to initiate an orderly shutdown of the line.

4.21.4.6 No Valid Flow Path Interlock

If a No Valid Flow Path alarm condition is detected, a group NO FLOW PATH bit is set and used to transmit an Emergency Shutdown (ESD) alarm to the Master Control Centre, in order to initiate an orderly shutdown of the line (Refer to Section 4.20.5.1 General Device Group for details).

4.21.4.7 Common Header valves

Where Header valves have been installed that are common to all products and must therefore be controlled by all product groups from the respective product routing screens, these valves shall remain in manual mode of control unless required by a sequence. Sequences (notably the routing sequence) will interlock the relevant header valve to automatic for the duration of the control request.

4.21.4.8 Density Hut DH80

Where LP Switching facilities are to be provided from within the Density Hut, LP Routing Control Panel/s shall be provided. The LP Routing Control Panel shall be active only when LP Routing is in SCADA mode. The switching panel in the Density Hut allows the following functionality:

4.21.4.8.1 Command Push-Buttons

The interface makes provision for the operator to issue the following commands to the control system:

3. Start Delivery (XS801) - integral P/Button / Lamp (Green)
4. Start Transition (XS802) - integral P/Button / Lamp (Green)
5. Stop Delivery (XS803) - integral P/Button / Lamp (Red)

All command buttons comprise of an integral push-button/lamp facility, the lamp being lit when the command button is enabled (as per the MDS Interface):

- The Start Delivery button will only be lit (XI806) when a Line-Up has been correctly entered, the Device Group placed in Automatic and the Route open.
- The Start Transition button will only be lit (XI807) when a Line-Up has been correctly entered, the Device Group placed in Automatic and a Primary route is online.
- The Stop Delivery button will always be lit (XI808).

4.21.4.8.2 Indication Lamps

The interface makes provision for the following status indications from the control system to the operator.

- Primary Route available (XI801) - Lamp (Green). Lit when all associated actuated valves are either available or in their correct state and all associated ZV's are in their correct state.
- Transition Route available (XI802) - Lamp (Green). Lit when all associated actuated valves are either available or in their correct state and all associated ZV's are in their correct state.
- Primary Route running/online (XI803) - Lamp (Green). Flashes when the route is in the process of being opened. Changes to steady state on when the route has been successfully put online.
- Transition route running/online (XI804) - Lamp (Green). Flashes when the transition is in the process of being effected i.e. respective routes being opened and closed. Changes to steady state on when the transition has been successfully completed.
- Delivery running/offline (XI805) - Lamp (Red). Flashes when the route is in the process of running offline. Changes to steady state on when the route has been successfully run offline.

4.21.4.8.3 Selector Switch

Enables the operator the ability to select the product Line Up required for switching.

4.21.5 DEVICE GROUP AVAILABILITY

Individual strainer leg availability is defined as a valid flow path through the strainer (i.e. Strainer actuated valve either available or open, and the ZV Valve open) and no latched high DP trip condition existing on the strainer.

Availability for the dual strainers is defined as either strainer leg being available.

4.21.6 ALARM STRATEGIES

4.21.6.1 LP Over Pressure Protection

In the event that an over pressure condition is detected in the LP Manifold whilst delivering, an alarm shall be activated.

4.21.6.2 Contamination Valves Leak Detection

In the event that a leak is detected on a contamination valve with the valve either fully open or closed (i.e. fully seated) and after a configurable time delay has elapsed, an alarm will be activated on the SCADA.

4.21.6.3 Strainer Fault

If the duty strainer indicates a high differential pressure, an alarm shall be issued.

4.21.6.4 No Valid Flow Path

Should any of the valves associated with a route on line (both in manual and automatic), block the flow through the route i.e. be not open, the operator will receive an alarm "Valves Mis-operated" and may include the following devices/device groups:

- Strainer valves
- Common Header valves
- HP Routing valves
- LP Product Routing valves
- Prover valves (Prover Device Group)
- Tank Inlet valves (when part of a route)

4.21.7 INTERLOCKING STRATEGIES

The following interlocking strategies have been defined for the LP Routing Device Group:

4.21.7.1 Hard wired interlocks

None.

4.21.7.2 PLC Interlocks

None.

4.21.8 GRAPHIC REPRESENTATION

Control System dependant – refer to LSX and PCS7 Typicals.

4.22 LP ROUTING PRODUCT GROUPS

4.22.1 TRANSFER METERING CONCEPTS

Transnet Pipelines makes use of two methods for measurement of product volumes at delivery and intake stations: The methods are defined as follows:

1. **Custody Transfer Metering;**
   Custody transfer metering with volume compensation for temperature, pressure and density is implemented for all products received from and delivered to TPL customers. The Custody Transfer metering system complies with API standards for pipeline custody metering, and must be approved by the South African department of Trade and Metrology. Custody Transfer metering makes use of flow computers for volume compensation.
2. **PLC Product measurement;**
   PLC Product measurement will be used to measure product volume moving within the TPL network. Volume measurement is done by measuring of meter signals counted by the PLC. PLC Product measured volumes may be compensated for the effect of temperature, pressure or density but not to the API standard of Custody Transfer metering.

The Metering System will be an automated electronic metering system used to measure all movement of product to clients at these stations. Full functionality of the metering system is achieved by using local components on each metering station. Each Station will have a local metering system with local data storage. Functionality is provided to facilitate remote monitoring and control of metering operations from the Master Control Centre (MCC) via the Automation system.

Metering is effected by interface to the following systems:

1. Centralised ERP System. (SAP R3)
2. Manufacturing Execution System (MES)
3. Automation System inclusive of Metering Application.
4. **Field measurement** instrumentation, Flow computers.

TPL Operations use the slug numbering format for the purpose of management and tracking of product volumes in the pipeline network. This slug numbering is to be implemented in all components of the metering system in order to provide metering reporting based on slug numbering.

The function of SAP R3 from a metering perspective is to receive and process purchase orders, create associated delivery schedules, and receive and process completed delivery records.

The function of MES System is to act as an interface between the Automation System and the ERP system. The Manufacturing Execution System will comprise of a Global MES system that co-ordinates MES across all stations with a local MES-Metering component at each metering station. As such, the local MES will receive metering instructions for the station from SAP and will prepare the delivery information and provide delivery instructions to the Automation System in the form of Line-Up information. The MES-Metering will also provide functionality for reporting on metering operations.

The local MES system will provide all the required functionality to perform Custody and PLC Product metering operations at the station independent of the central Global MES.

The Automation System will execute all delivery instructions received from the MES System and will report back on metering operations to the MES System., including alarm and event information. The control of Custody and PLC Product metering operations will be integrated into the Automation system. In the event that the interface between the ERP and local MES is not available, manual input to the metering system will be possible from the local MES System. In the event that the local MES System is not available, manual input to the metering system will be possible from the Automation System.

4.22.2 GROUP DESCRIPTION

Full monitoring and control functionality of all LP manifold operations will be enabled both locally at the pump stations as well as remotely at the Master Control Centre.

LP Routing shall be able to be controlled both manually and automatically.

The LP manifold consists of different product groups (e.g. Petrol, Diesel, ULP and Intermix). Specific product groups may have either single or dual metering manifolds to meter the product delivered to the consignee and/or the Intermix Tank.

Custody metering in metering stations will make use of a turbine meter that will be proved with bi-directional loop provers. Meter pulses will be counted by the flow computer. Temperature, pressure and density used by the flow computer for volume correction will be directly connected to the flow computer and not to the Automation system. The Automation system will receive transmitted readings from these instruments via the flow computers.

The Custody Transfer metering system will allow multiple deliveries to take place simultaneously if the manifold configuration permits this operation. The multiple concurrent deliveries are product independent.

Control of the manifold routes at a station will be done with the PLC that forms part of the Automation system. All valve control including the control of the consignee valves and four way valves for the loop provers will be done by the PLC. The flow computer will provide requests to the Automation system when the flow computer requires a valve to operate.

The custody metering system will handle only one prover flow computer assigned per group of stream flow computers. That means that a stream flow computer can only be proved by a single dedicated prover. The prover flow computer can prove several stream flow computers, but only one at a time. The prover flow computer cannot belong to more than one group of stream flow computers.

Pressure and temperature compensation of Intermix metered into Intermix Tanks may not required and thus where Intermix is metered by means of a dedicated intermix metering manifold, pressure and temperature compensation need not be installed.

There can only be one active Primary route per Flow Computer. Transitions may occur across or between the same products, Line Up Screens or Flow Meters.

Note that where a delivery incorporates a Prover, the Prover has to be placed Online separately. (See Section on Prover Device Group elsewhere in the document). Prover Inlet, Outlet and Bypass Valves do not form part of the Route Selection Group, but will be controlled from the Prover Group defined elsewhere in this document. It should also be noted that one route only may utilise the Prover at any one time.

Control and Monitoring functionality shall be achieved via the following devices:

Valves
Valves will be defined on a per Station basis but will generally include:

- Header valves
- Strainer valves
- Metering valves
- Distribution valves
- Consignee valves

Instrumentation
Field Instrumentation will be on a per Station basis but will generally include:

- Strainer Diff pressures
- Sample Point Flow Switches
- Feeder Line pressures
- Manifold/Stream Density

4.22.3 MODES OF CONTROL

The LP Routing Device Group shall be controllable both locally from the SCADA System installed at the Pump Station as well as remotely from the Master Control Centre in Durban.

4.22.4 MODES OF OPERATION

All devices related to the LP Routing shall have the following three Modes of Operation:

- Local
- Manual
- Automatic

When in manual mode, the group must be operated according to TPL operational procedures by the operator who also takes full responsibility for the plant.

In manual, the route valves are opened manually and once the selected route is online, the operator needs to issue the Start Intake command validating the intake to the FC.

Status Tracking
All status indications are also monitored and displayed in manual mode. This includes the following:

- Valve Route Indication

- Route Availability (Primary and Transition)
- Open Route Inhibit
- Route Open Indication
- Start Intake Enable
- Start Transition Enable
- Route Online Indication (Primary and Transition)

4.22.5 GROUP FUNCTIONALITY

The control for the different products are identical. The explanations in this document are generalised but are detailed in tables or logical and flow diagrams.

When taking a sample a flow switch is used to trigger an event for recording purposes. This signal is delayed by 2 seconds. Change in status of this sample point switch is treated as a message and not an alarm.

4.22.5.1 METERING INTERFACE

4.22.5.1.1 COMPENSATED FLOW

A hardwired signal sends the compensated flow to the PLC for flow control as an analogue input. The update is a lot quicker than the flow rate received from the control system, ensuring more accurate flow control.

4.22.5.1.2 UNCOMPENSATED FLOW

A hardwired signal sends the uncompensated flow to the PLC for batch tracking and leak detection.

4.22.5.1.3 METERING FEEDBACKS

Supervisory communication failure
This digital input is send to the control system for display only.

System alarm
This digital input is sent to the control system for display only.

Process alarm
This digital input is send to the control system for display only.

Computer alarm (Watchdog)
This digital input is send to the control system for display only.

Bad pulse alarm
This digital input is send to the control system for display only.

Batch limit 1
This digital input is send to the control system for display only.

Batch limit 2
This digital input is send to the control system for display only.

4.22.5.1.4 METERING COMMANDS (S600 Flow Computers)

Raw pulse enable
The PLC sends a signal (digital output) to the specific metering flow computer depending on the following conditions:

- LP route online for that meter
- Prover online for that product

Only one raw pulse enable per prover, can be high at any one time. The purpose of this signal is to tell the relevant stream computer to enable its raw pulse bus output, to enable proving for that stream.

Logical consignee status
Logical valves are used in the LP manifold where only one physical consignee/or valve exists and more than one valve is required to perform switching (e.g midnight switching). Logical valves (PLC digital outputs) are hardwired to the respective Flow Computers and act as consignee valves by giving feedback when switched. In order to ensure that metering is initiated when a consignee valve is opened in the field, PLC Interlocking ensures that an associated logical valve is opened when the consignee valve moves off its closed limit.

The PLC sends a signal (digital output) to the specific metering flow computer indicating to which consignor an intake is online. There are a maximum of twenty consignee valves per flow computer. The logic that will switch the logical consignee status depends on the configuration of the LP routing manifold as explained further on in the document.

4.22.5.1.5 Logical Consignees (Single metering)

TPL requires that all metering dockets be closed at specific dates of the month without shutting the line down. This is made possible by running a transition the same source. To enable the flow computer for the single meter manifold intake, two logical consignor status signals are used per destination.

Logic “1” indicates a valve is closed.

Each meter’s product header valve has two logical consignor valves.

The consignor status signal will enable the respective flow computer.

Automatic sequence control will ensure that the correct logical consignor status is open.

In manual mode it is the operator’s responsibility to ensure that he opens the correct logical consignor before the product header valve is opened. To prevent illegal deliveries, the PLC will pulse open the logical consignor status 1 if the product header valve and the consignor is not closed.

4.22.5.2 No Valid Flow Path Interlock

Refer to Section 4.21.4.6 LP Routing General for details.

4.22.5.3 Intermix Detection

Intermix Detection bit is enabled by cross product transition or Intermix Tank delivery. The bit will be reset when no intermix route is on line. Used for initiation of flushing sequences.

4.22.5.4 Line-up Data

Before any deliveries/intakes can take place, the Line-up information has to be entered either manually as an offline delivery or by downloading deliveries from the MES System. This can take place any time prior to starting the delivery/intake. This includes the following:

- Slug number (editable offline only)
- Source of product (selectable)
- Destination of product (selectable)
- Transition Mode - Batch Limit 2 or Manual (selectable)
- Next Delivery – Transition (selectable)
- Start Time and End Time
- Target Volume to be delivered/taken in (editable)
- Target Flow rate (editable)

Note: Separate but largely identical Line-Up screens exist for Custody Transfer and PLC Product Measurement within the Automation environment, and assist the operator in controlling the respective deliveries taking place.

There is no limit to the number of deliveries that can be included in the Line-up screen.

For an unplanned delivery the operator must enter a slug number and must select Source, Destination and Product. Slug number does not necessarily match Source, Destination and Product.

In order to execute a delivery, the operator selects a delivery from the Line-Up screen. The PLC then assigns a route to the delivery based on the default route for that source destination and product. If the default route is not available the next available route will be selected. The valves for that route are marked with "P" and the transition route indicated by the next product selection will be marked "T".

The Source, Destination and Product can be edited by the Operator, which will cause the PLC to re-assign a route. The slug number will not be changed.

The Operator must set the Next delivery to one of the other delivery numbers in the line-up if the operator requires a transition route for this delivery. If no next delivery is selected, there will not exist a transition route for this delivery.

Target Volume data is sent to both the PLC and FC whilst Flow rate and Route No. are sent to the PLC only. The Volume to be delivered may be edited during a delivery - the flow rate entered in the Line-up table is used as the initial starting set point for the delivery flow control valve.

4.22.5.5 Route number selection

A Route and associated route number is determined by the source and destination entered into the Line-up screen. This Route number is sent to the PLC. The PLC will return the calculated route number and a manifold selection to the SCADA accordingly based on meter manifold availability. Availability of routes will be indicated in the Line-Up screen against each delivery, whether selected by the operator or not.

In the case of dual metering manifolds, the default route number is always even (metering manifold 1), provided the route is available. In the event that the route associated with metering manifold 1 is not available, the PLC will increase the route number by one (metering manifold 2), irrespective of its availability.

4.22.5.6 Routing valve indication

Routing valve indication is only displayed on selected routes.

An indication on a valve will show if it is in the primary route "P" or transition route "T" depending on the route number. If a valve is part of the primary and transition route, this is shown as both "B".
Note: For "P" and "T" indications valves in the LP General Route are excluded from the indications.

4.22.5.7 Open Route command

[Note: Diagram reflects LSX Control System design principles and has been included for information purposes].

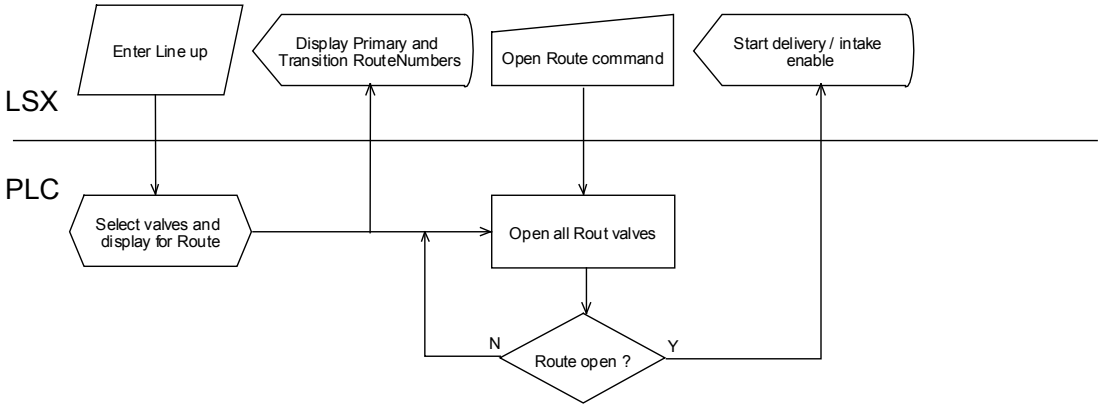

Figure 5.16.1

The Selected Route is indicated by displaying P (Primary), T (Transition) or B (Both) alongside the individual valve symbols on the graphics.

An Open Route Sequence is initiated from:

- An Open Route command

On receipt of a selected valid Route Number and on issuing an Open Route command from the Line Up or Product Screens the Open Route sequence is initiated. The route is opened by simultaneously opening/closing all appropriate valves. Note that availability is not a prerequisite for opening a route.

Availability will be indicated in the Line Up Screen and Product Screens, displaying either yellow (not available) or green (available). Availability is determined by the status of all valves in the Route, from Header to Consignee.

Open route button is only inhibited if another product intake/delivery is taking place to the same destination. Once the route is open, a bit "Route Open" is set that will also disable the open route button. This bit is reset if all routes are closed e.g. header valve is closed. This is achieved by running a stop intake sequence in Auto or closing valves in manual.

(Refer to typical Route Availability and Indication Schedules at the end of this chapter).

4.22.5.7.1 Open Route Sequence

On receipt of a selected valid Route Number and on issuing an Open Route command from the Line-up or Product Screens, the Open Route sequence is initiated. The route is opened by simultaneously opening/closing all appropriate valves. Note that availability is not a prerequisite for opening a route.

(Refer to typical Open Route Sequence Flowcharts at the end of this chapter).

The detailed process of the Open route sequence is as follows:

Open source

The sequence will control the source valves of the route simultaneously.

i) Route from HP
- Close selected common header valve
- Open selected product header valve
- Close opposite product header valve (same product, different sources)
- Close accumulator tank header valve (not Intermix route)
- Interlock other product header valves from the same Mainline source closed
- Interlock product blend valve closed

ii) Route from accumulator tank (not Intermix routes)
- Close all product header valves
- Close selected tank outlet valves
- Open/close valve between accumulator tanks as required
- Open accumulator tank header valve
- Open other route valves from accumulator tank outlet delivery
- Interlock product blend valve closed

Open destination

The sequence will control the destination valves of the route simultaneously.

i) Delivery to consignee (not Intermix routes)
- Open selected meter valve
- Close opposite meter valve
- Close all delivery valves except that which is required by the route
- Close all consignee valves

ii) Delivery to accumulator tank (not Intermix routes)
- Open selected meter valve
- Close opposite meter valve (same product)
- Close delivery valve common to the same consignee
- Close all delivery valves common to the same manifold
- Close selected accumulator tank inlet valve

iii) Delivery to intermix tank
- Open selected meter valve (not Intermix routes)
- Close opposite meter valve (not Intermix routes)
- Close all delivery valves except that which is required by the route

- Close all consignee valves
- Close selected intermix tank inlet valve
- Open other intermix tank inlet valve in the route
- Close all other intermix tank inlet valves

Open Route indication will be given once all valves associated with the route that are required to be open are open, all valves associated with the route that are required to be closed are closed, and flow paths exist through the relevant strainer/s and prover.

Once the route is open, a "Route open" bit is set that will disable the "Open route" button for all routes to that destination. The Open route button for routes to destinations other than the one currently online will however remain available. This bit is reset when the associated route is closed. [Functionality changed during WIR Commissioning dated Nov 2009, to enable faster switching to handle smaller slugs]. This is achieved by running a "Stop delivery" sequence in automatic or by closing the valves in manual.

Any faults encountered during the running of the open route sequence will result in the sequence continuing to completion. Device faults during open route shall be used to continue the Sequence, complete with all associated Alarming and Event Logging procedures. If a failure occurred the operator has to correct the fault either manually or in local to get an open route indication.

4.22.5.8 Start Intake Command

A Start Intake Sequence is initiated from:

- A Start Intake command if enabled
- Local "Start Intake" from the Switching panel within the density hut.
- Automatic cross product transition, triggered by a Batch Limit 2 being reached on the current delivery

The Start Intake command initiates the Start Intake/Transition Sequence in the PLC.

In manual, these valves will have to be operated manually and the Start Intake command issued to the FC to validate the intake.

Note that availability is not a prerequisite for issuing a Start Intake command.

All faults during the start intake process shall result in the Sequence aborting, complete with all associated alarming and event logging procedures.

4.22.5.9 Start Delivery command

The Start Delivery button (Product Overview Screen) is enabled if:

- If the route is open, a bit is set that will enable the Start delivery button. This bit is reset as soon as the primary route is online, or if all the header valves are closed.
- There is another product delivery from the same source that is currently online. This is for a cross product transition.
  Example:

If there is a diesel delivery currently online and a route for petrol is configured from the same source, the Start delivery button for petrol is enabled allowing for a cross product transition. An open route sequence is incorporated in this instance.

A Start Delivery Sequence is initiated from:

- A Start Delivery command
- Automatic cross product transition, triggered by a Batch Limit 2 being reached on the current delivery
- Local "Start Delivery" from the Switching panel within the density hut.

The Start Delivery command initiates the Start Delivery/Transition Sequence in the PLC.

In manual, these valves will have to be operated manually and the Start Delivery command issued to the FC to validate the delivery.

Note that availability is not a prerequisite for issuing a Start Delivery command.

All faults during the start delivery process shall result in the Sequence aborting, complete with all associated alarming and event logging procedures.

4.22.5.10 Start Transition Command.

The Start Transition button is enabled if a primary delivery is online and a valid alternative route to the same product destination is configured in the Line Up screen.

A Start transition Sequence is initiated from:

- A Start Transition command
- Automatically when specified in the Line Up screen, triggered by a Batch Limit 2 being reached on the current delivery
- Local "Start Transition" from the Switching panel within the density hut.

The Start Transition command initiates the Start Delivery/Transition Sequence in the PLC.

The Start Transition Sequence may be programmed to perform one of two types of switches between Primary and Transition manifolds, as outlined below:

- The Primary Header/Consignee valve must be fully closed before the Transition Header/Consignee valve is opened (Close Switch). Only used on TOP Stations.
- The Transition Header/Consignee valve must be fully opened before the Primary Header/Consignee valve is closed (Open Switch).

Note: The practice of fly-switching within the same flow computer will no longer be permitted at any of TPL custody metering stations or supported by the Custody Transfer Metering Flow Computers.

Note that availability is not a prerequisite for opening a route. Availability will be indicated by the Route Number Display Box displaying either yellow (not available) or green (available).

All faults occurring whilst opening or closing a route during a Transition Sequence shall result in the following action being taken, complete with all associated alarming and event logging procedures.

	Close Switch		Open Switch	
	Close Prim	**Open Trans**	**Open Trans**	**Close Prim**
Single Manifold	Continue	Continue	Abort	Continue
Dual Manifold	Continue	Continue	Abort	Continue

4.22.5.10.1 Start Delivery/Transition Sequence

The Start Intake/Delivery/Transition sequence handles both deliveries and transitions for the same product as well as cross product transitions. Cross product transitions are allowed for the following:

- From a product to Intermix from the same source
- From Intermix to a product from the same source

When the intake has been successfully opened a route online indication for the selected primary route is given.

Note that availability is not a prerequisite for issuing a Start Intake command.

Any faults encountered during a Start Intake/Transition Sequence shall result in the following action being taken, complete with all associated alarming and event logging procedures.

- While opening route – ABORT
- While closing route – CONTINUE

4.22.5.10.2 Open Switches

The sequence first opens the valves required for the route, before it closes valves that are not required. One complete, the sequence will run a stop delivery sequence for any other product delivery that is online from the same HP source.

The detailed process of the Start Delivery/Transition sequence is as follows:

Determine route

Determine if it is a primary or transition route and transfer the relevant route number to the working route number (R). The sequence will now work with this route number.

Open destination

The sequence will now open the destination valves of the route simultaneously.

i) Delivery to consignee (not Intermix)
- Open selected meter valve
- Open selected delivery valve
- Open selected consignee valve

ii) Delivery to accumulator tank (not Intermix)
- Open selected meter valve
- Open selected delivery valve

- Open selected accumulator tank inlet valve

iii) Delivery to intermix tank through the product metering manifold
- Open selected meter valve
- Open selected delivery valve
- Open intermix delivery valve
- Open selected intermix tank inlet valve

All faults during this stage of the Start Delivery sequence will result in the sequence aborting complete with all associated alarming and event logging procedures.

Open source

Once all the selected destination valves are open, the source valves are opened.

i) Delivery from HP
- Open selected product header valve
- If open, open selected common header valve

ii) Delivery from accumulator tank (not Intermix)
- Open selected tank outlet and other valves required
- Open accumulator tank header valve
- If all open, start selected accumulator pump

All faults during this stage of the Start Delivery sequence will result in the sequence aborting complete with all associated alarming and event logging procedures.

The opening portion of the sequence is now complete and the sequence will close the required valves detailed in the following stages. All valves are closed simultaneously in these stages.

The sequence first checks if the route is online (all valves open including hand valves). If the route is online, the closing section is started. If the route is not online the sequence is aborted without closing any valves.

Close primary route delivery and consignee (not Intermix)

If a transition route is selected, the sequence will now simultaneously close the primary routes delivery and consignee valves unless the transition is to the same consignee.

i) Primary route to consignee
- Close delivery valve
- Close consignee valve

ii) Primary route to accumulator tank
- Close delivery valve
- Close accumulator tank inlet valve

iii) Primary route to intermix tank
- Close delivery valve
- Close intermix tank inlet valves

All faults during this stage of the Start Delivery sequence will result in the sequence continuing to completion with all associated alarming and event logging procedures.

Close destination

The sequence will simultaneously close the relevant destination valves not required for the selected route.

i) Route to consignee (not Intermix)
- Close opposite metering valve (same product, different manifold)
- Close Delivery valve common to the same consignee
- Close all delivery valves common to the same manifold

ii) Route to accumulator tank (not Intermix)
- Close opposite metering valve (same product, different manifold)
- Close Delivery valve common to the same accumulator tank
- Close all delivery valves common to the same manifold

iii) Route to intermix tank
- Close opposite metering valve (not Intermix)
- Close Delivery valve common to the same intermix tank (not Intermix)
- Close all delivery valves common to the same manifold (not Intermix)
- Close other intermix tank inlet valves

All faults during this stage of the Start Delivery sequence will result in the sequence continuing to completion with all associated alarming and event logging procedures.

Close source

The sequence will simultaneously close the relevant source valves not required for the selected route.

i) Route from HP
- Close corresponding product header valve
- Close accumulator tank product header valve
- Close accumulator tank outlet valves (not Intermix)
- Stop accumulator pump (not Intermix)

ii) Route from accumulator tank (not Intermix)
- Close both product header valves
- Close accumulator tank outlet valves of the opposite tank
- Close other accumulator tank valves that need to be closed

All faults during this stage of the Start Delivery sequence will result in the sequence continuing to completion with all associated alarming and event logging procedures.

Stop other product deliveries

If another product header valve is open and the selected route is from the same source, the Stop delivery sequence for that product is initiated, if that group is in automatic mode. If the group is in manual mode, the associated header valves are interlocked closed.

When the configured route has been successfully opened a route online indication for the selected primary route is given.

(Refer to typical Start Intake Sequence Flowcharts at the end of this chapter).

4.22.5.10.3 Closed Switches

The sequence first closes the route that is online, before opening the valves required for the second route. Once complete, the sequence will run a stop delivery sequence for any other product delivery that is online from the same HP source.

The detailed process of the Start Delivery/Transition sequence is as follows:
To be added to Automation Standard at a later date.

4.22.5.11 Stop intake/Delivery command

A Stop Delivery Sequence can be initiated from two sources:

- A Stop Intake/Delivery command
- Automatically when specified in the Line Up screen, triggered by a Batch Limit 2 being reached on the current delivery
- From the MDS during a Cross Product Transition
- Local "Stop Intake/Delivery" from the Switching panel within the density hut.

A Stop Intake/Delivery (Sequence Off-line) command is issued from the Product Overview Screen, thus taking the Primary route Off-line. Stop Intake/Delivery command is performed irrespective of route device availability.

4.22.5.11.1 Stop intake/Delivery sequence

The Stop Delivery sequence will close the LP manifold for the product for which the stop delivery was initiated in the following order:

Close common header

If there is no other product delivery from the same HP source (common header), then close the common header. If there is, this portion will not be executed.

i) Close the control valve not required by other product deliveries
ii) Close the common header for the same source

Isolate supply

This portion will isolate the delivery before all valves are closed.

i) Interlock off accumulator Pumpset (not Intermix)
ii) Close both product header valves
iii) Close accumulator tank outlet valve (not Intermix)

Close remaining valves

The remaining valves are now closed simultaneously.

i) Close all consignee valves (not Intermix)
ii) Close all delivery valves (not Intermix)
iii) Close both metering valves (not Intermix)
iv) Close accumulator tank routing and header valves (not Intermix)
v) Close intermix tank inlet valves for all intermix tanks not required for delivery from the other products or intermix.

Stop Intake is performed irrespective of route availability.

Any faults encountered during the running of the Stop Intake/Delivery sequence will result in the sequence continuing to completion. Device faults during Stop Intake/Delivery sequence shall be used to continue the Sequence, complete with all associated Alarming and Event Logging procedures.

4.22.6 ROUTE AVAILABILITY

Availability for the LP Routing (Product) group is done on a per route basis and is indicated on the route number blocks for the Primary and the Transition route. When available the box will display a green background and when not available it displays a yellow background.

Automatic control via the PLC will not be inhibited.
The following will render the Route selected "Not available".

- Routing Valves in Local/Fault States
- Any routing hand valves with incorrect status

Automatic control via the PLC will not be inhibited.

4.22.7 ALARM STRATEGIES

4.22.7.1 Strainer Fault

If the duty strainer indicates a high differential pressure, an alarm shall be issued. This alarm is reset if the two valves across the strainer are closed. These will normally be the strainer inlet and outlet valves but in cases were either of these valves is not installed, the closest valve is used.

4.22.7.2 LP Route No Flow Path

Refer to Section 4.21.4.6 LP Routing General for details. A "No flow path" is activated if there is no intake online. An online condition is if all the valves are either open or in wire-break condition.

4.22.8 INTERLOCKING STRATEGIES

The following interlocking strategies have been defined for the LP Routing Device Group:

4.22.8.1 Hard wired interlocks

None.

4.22.8.2 PLC Interlocks

4.22.8.2.1 Logical Valve – Consignee Valve Interlock

To prevent an intake not being metered, the first logical consignor is opened from the sequences in automatic before the product delivery valve is opened. They are also opened if the product header valve is not closed in any mode.

In manual mode the logical consignor valve is interlocked open, if it is open and the other logical consignor is closed. This forces the operator to open the other logical consignor before closing the original consignor.

4.22.8.2.2 Logical Valve - Delivery Valve interlock

This interlock is required in order to interlock the Flow computer consignee status when a consignee valve is opened and no associated delivery valve is open.

If the consignee valve is opened and no associated delivery valve is open, then the PLC will send an open consignee status to the same product Flow Computer not in use. The default Flow computer will be that associated with the first meter of the particular product.

Note that this means that if one consignee is already open, only the Start Transition sequence will be available to the operator. If the second route is opened, then the Start Transition/Start Delivery buttons will be disabled, until one of the consignee valves are closed.

4.22.9 GRAPHIC REPRESENTATION

Control System dependant – refer to LSX and PCS7 Typicals.

Routing Group

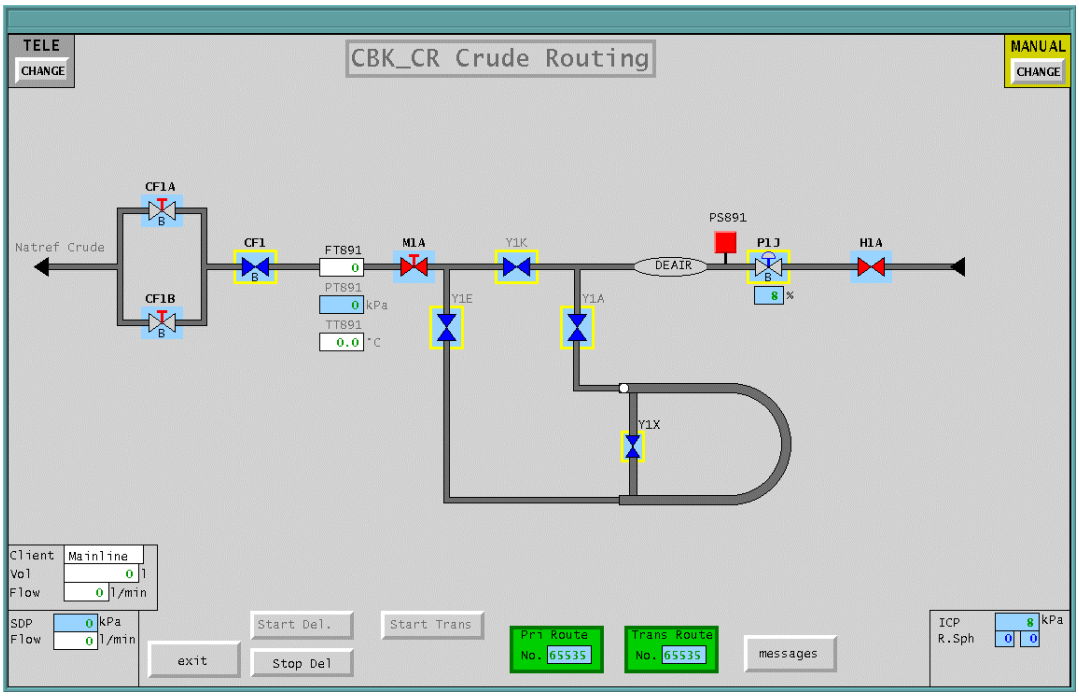

4.22.10 TYPICAL SEQUENCE FLOWCHARTS & SCHEDULES

4.22.10.1 Typical Sequence Flowcharts

Typical sequence flow charts are available on request.

4.22.10.2 Typical Availability and Indication Schedules

Typical Availability and Indication Schedules are available on request.

4.23 ACCUMULATOR TRANSFER

This group deals with the transfer of product from storage tanks to either the LP manifold (delivery to companies), HP Manifold (for distribution via pipeline) or storage tanks (inter-tank transfer). Transfer is effected by booster / accumulator pumps, with either spillback facilities or a control valve to control flow rate or discharge pressure.

4.23.1 GROUP DESCRIPTION

Example of LP-HP Transfer without spillback:

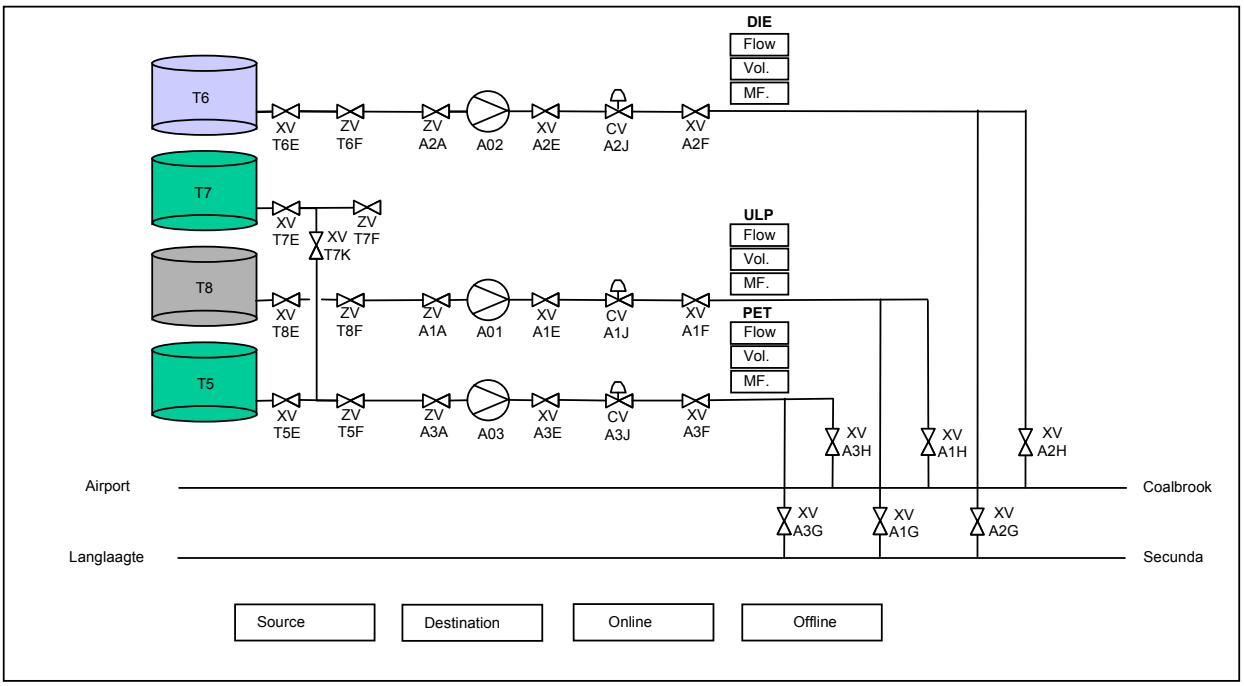

Accumulator Transfer is grouped on a product basis. Availability will be displayed on a per route basis. This will enable the operator to see what route can be placed online. This will also prevent conflicting routes to be placed online simultaneously.

In cases where manifold design permits, it is possible to have two Accumulator transfers simultaneously, as long as the destination differs.

Switching between different sources will be permitted and will comprise of open switches.

There will be four buttons: A source, destination, sequence online and sequence offline buttons. The source button will select the source and display the source on the button. The destination button will select the destination (either another tank for Inter-tank Transfers, or LP Routing or HP Routing). The PLC will derive from Source and Destination the route required for transfer and displays the availability on the Sequence online button (Yellow or Green).

Selecting the Sequence online button will start the sequence, opening all the valves required for that route. The sequence will not close any other online route. The online button will be disabled if the selected route is not available or if a route is online already.
Each product has its own offline sequence. Selecting the offline will run that specific transfer route offline. The offline sequence button will not be linked to availability.

Control and Monitoring functionality shall be achieved via the following devices:

Valves
Tank Outlet valves
LP-HP Routing valves
LP-HP Control valve (where required)
Spillback Control valve (where required)
Spillback routing valves (where required)

Instrumentation
LP-HP Transfer flow meter

These flow meters are non-custody meters. They will provide flow pulses that are accumulated to supply delivery/transfer volumes and where spillback facilities are supplied, will be used to control minimum flow through the booster pumps.

4.23.2 GROUP FUNCTIONALITY

4.23.2.1 Spillback Control

A flow / pressure controlled spillback system may be installed to control minimum flow through the booster pumps. The spillback control valve must remain closed during booster/accumulator pump start-up conditions, in order to reduce motor start-up load currents.

Each pump will have minimum flow spillback facilities arranged such that the spillback line can only return to the same accumulator from which the product is being pumped via the spillback tank inlet valve. When the selected storage tank outlet valve is opened, the associated spillback tank inlet valve is opened in cases where tank to HP route has been selected.

4.23.2.2 Inter-Tank Transfer Control

Inter-tank transfer can take place either via specifically installed inter-tank transfer pumps, or via booster pumps. Automatic transfers will be provided only for accumulators of the same product grade.

Additional requirements for Route Availability for this operation is as follows:

Receiving Accumulator:

- Level must be “healthy” and not above the normal fill level of the tank
- All inlet and outlet valves must be closed.

Delivery Accumulator:

- All inlet valves must be closed.
- Tank Outlet valve must be available

4.23.2.3 PLC Product Measurement Interface

Flow pulses will be input into PLC counter cards for flow and volume measurement. Flow and volume measurement may be temperature or pressure compensated.

The flow pulse counter value is compensated for by the meter factor for each of the products.

Accumulated volume counters will be reset at the end of each transfer.

The PLC will calculate the following for each of the products:

- Actual flow rate
- BlTotal – Total volume delivered
- HblBatch - Total volume delivered at the end of hour
- HblHour - Total volume delivered over the past hour at the end of hour
- HblHour – End of hour pulse
- EblBatch - Total volume delivered at the end of a delivery
- EblHour – End of delivery pulse

4.23.2.4 Route Online

Online sequences exist for each configured route. It is possible to have multiple routes open at the same time.

An Online Sequence is initiated from:

- A Online command if enabled

A check is undertaken to ascertain if the selected route is “Ready”.

Any device failure during the Online sequence will result in the sequence aborting complete with all associated alarming and event logging procedures.

4.23.2.5 Route Offline

Offline sequences exist for each configured route. It is possible to stop the transfer for the one product but continue with another.

An Offline Sequence can be initiated from:

- An Offline command

The offline sequences are performed irrespective of the availability.

Any faults encountered during the running of the offline sequence shall be used to continue the Sequence complete with all associated Alarming and Event Logging procedures.

4.23.3 DEVICE GROUP AVAILABILITY

Not applicable.

4.23.4 ROUTE AVAILABILITY

Availability will be indicated on the Online Sequence button displaying either yellow (not available) or green (available).

Availability is determined by the following:

- Status of all devices associated with a selected route available
- Tank level below the normal fill level
- No other route online to both the source and destination tanks
- In the case of LP-HP Transfer, the associated HP Route must be online.

4.23.5 ALARM STRATEGIES

To be determined.

4.23.6 INTERLOCKING STRATEGIES

The following interlocking strategies have been defined:

4.23.6.1 Hard wired interlocks

None.

4.23.6.2 PLC interlocks

None.

4.23.7 GRAPHIC REPRESENTATIONS

Control System dependant – refer to LSX and PCS7 Typicals.

4.24 PROVER

4.24.1 GROUP DESCRIPTION

Prover loop facilities at delivery and intake stations are utilised to accurately establish meter factors to be used in the metering of product, to API Standards. Two types of Provers are currently installed at Transnet Pipelines sites: UNI directional and BI directional Provers.

The custody metering system will handle only one prover flow computer assigned per group of stream flow computers. That means that a stream flow computer can only be proved by a single dedicated prover. The prover flow computer can prove several stream flow computers, but only one at a time. The prover flow computer cannot belong to more than one group of stream flow computers. Groups of stream flow computers can consist of same product stream flow computers or consist of stream flow computers for different product types.

The Proving Cycle can be started either from the Metering Manager Screen or directly from the Flow Computer.

Facilities to fill and empty the Prover prior to and after proving are provided and consist of dedicated transfer tanks, transfer pumps and associated inlet and outlet piping. Filling and draining of Provers may be either manually or automatically controlled on multi-product Provers or locally controlled on single product Provers. Automation of these operations require automatic control of all associated transfer, drain and vent valves and transfer pumps, as well as the continuous level measurement of the transfer tanks.

Prover loop operation as controlled by the PLC comprises of the following:

- Prover Fill & Drain Sequences
- Prover On Line Sequence
- Prover Off Line Sequence

Prover Loop operation as controlled by the Flow Computers comprise of the following:

- Proving Cycle Control with FC in automatic and manual (from the handheld).

Prover availability is based on devices required for individual sequences.

4.24.1.1 Field to PLC Interface

Control of the Prover Device Group by the PLC is achieved via interface to the following equipment:

Valves

Prover Inlet Valves, on a per product basis	(YxA)
Prover Outlet Valves, on a per product basis	(YxE)
Prover Bypass Valves, on a per product basis	(YxK)
Prover 4 way Valve	(YxR)
Prover Drain Valves, on a per product basis	(YxW)
Prover Vent Valve/s	(YxV)
Prover Transfer Routing Valves, on a per product basis	(FxR)
Prover Transfer Valves, on a per product basis	(Fxx)

Pumps

Prover Transfer Pumps	(Xxx)

Instrumentation, pumps and valves

Prover Sphere Detectors	(ZIxx1-xx6)
Prover Hi Level Switches	(LSHxx1- xx2)
Prover Low Level Switches	(LSLxx1- xx2)
Prover Transfer Tank Levels	(LTxx1)
Prover EPV Valve Leak Detect Flow Switches	(FS xxx)
Prover Transfer Pump Flow Switches	(FS xxx)

4.24.1.2 Field to FC Interface

Control of the Prover Device Group by the FC is achieved via interface to the following field equipment:

Valves

Prover 4 Way Valve	(XV YxR)

Instrumentation

Prover Sphere Detector	(ZI xx2)
Prover Sphere Detector	(ZI xx3)
Prover Sphere Detector	(ZI xx4)
Prover Sphere Detector	(ZI xx5)
Prover Valve Differential Pressure	(PDS xx1)
Product Prover Reference Temperature	(TE xx1)
Product Prover Reference Pressure	(PT xx1)

FC to PLC INTERFACE (S600 Flow Computer)

Supervisory communication failure	UA860
System alarm	UA861
Process alarm	UA862
Computer alarm (Watchdog)	UA863
Prover four-way valve close command	XVY1R_RV
Prover four-way valve open command	XVY1R_FD
Prover four-way valve closed indication	XVY1R_REV
Prover four-way valve opened indication	XVY1R_FWD
Prover four-way valve remote indication	XVY1R_REM

4.24.1.3 Sphere Indication

Either four or six sphere detectors are mounted on a Prover and interfaced to the flow computer and PLC. The status of the sphere detectors are also used to indicate the position of the sphere on the SCADA, as follows:

Four sphere detectors:

Home	- Set if ZI xx1 is detected, reset if ZI xx2 is detected
Position 1-	Set if ZI xx2 is detected, reset if ZI xx1 or ZI xx3 is detected
Position 2-	Set if ZI xx3 is detected, reset if ZI xx2 or ZI xx4 is detected
End	- Set if ZI xx4 is detected, reset if ZI xx3 is detected

Six sphere detectors:

Home - Set if ZI xx1 is detected, reset if (ZI xx2 or ZI xx3) is detected

Position 1 - Set if (ZI xx2 or ZI xx3) is detected, reset if ZI xx1 or (ZI xx4 or ZI xx5) is detected

Position 2 - Set if (ZI xx4 or ZI xx5) is detected, reset if (ZI xx2 or ZI xx3) or ZI xx6 is detected

End - Set if ZI xx6 is detected, reset if (ZI xx4 or ZI xx5) is detected

4.24.2 MODES OF CONTROL

The Prover Device Group shall be controllable both locally from the SCADA System installed at the Pump Station as well as remotely from the Master Control Centre in Durban.

4.24.3 MODES OF OPERATION

All devices related to the Prover shall have the following three Modes of Operation:

- Local
- Manual
- Automatic

If the Flow Computer is in Maintenance mode the communication between SCADA and the Flow Computer is inhibited. This will enable modification of variables within the FC from the handheld.

4.24.4 GROUP FUNCTIONALITY

4.24.4.1 Metering System Feedback

Supervisory communication failure
This digital input is sent to the Control System for display only.

System alarm
This digital input is sent to the Control System for display only.

Process alarm
This digital input is sent to the Control System for display only.

Computer alarm (Watchdog)
This digital input is sent to the Control System for display only.

4.24.4.2 4-Way Valve Control (S600 Flow Computer)

Prover Four-way valve local and manual mode is according to the standard.

The 4-way valve does not form part of the prover group automatic mode of operation, but has a separate automatic dialog. If the valve is in FC CONTROL (S600 Automatic mode), the Prover flow computer has control of the 4-way via the PLC. Forward and reverse commands are received from the flow computer as digital inputs and the PLC will switch the 4-way valve accordingly. If the valve is in PLC CONTROL (S600 manual mode), then control commands are based on operator, who remains responsible.

If the 4-way valve is in FC CONTROL mode a purple border is displayed around the valve symbol on the Control System.

The following prover indications are sent to the flow computer via digital outputs from the PLC:

- Prover forward position feedback
- Prover reverse position feedback
- Prover remote mode indication if the 4-way valve is in automatic mode but not in local

The S600 looks at a not standard "0" signal as being active according to the following table:

Open	Closed	Indication
0	0	Wire break
0	**1**	**Reverse (Closed)**
1	**0**	**Forward (Open)**
1	1	Moving

4.24.4.3 No Valid Flow Path Interlock

Refer to Section 4.21.4.6 LP Routing General for details.

4.24.4.4 Proof Enable

Not required for S600 Flow Computers.

4.24.4.5 Raw Pulse Enable (S600 Flow Computers)

Raw Pulse Enable (RPE) will enable the flow computer, if the Prover is online to the active route. RPE will be used to select Client box information on Prover graphic screen.

4.24.4.6 Prover Online Control Sequence

The Prover On-line Sequence is activated on receipt of –

- an Online Request from the SCADA

A check is undertaken to ascertain if the Prover Group is "Ready" based on the same product as that in the manifold for which it is intended to be placed on line. The Prover Discharge and Inlet Valves are then opened and on successful completion the Bypass Valve is closed. The Prover is now online.

Any device failure during the online sequence shall result in the sequence aborting, complete with all associated alarming and event logging procedures.

4.24.4.7 Prover Offline Control Sequence

The Prover Offline Sequence is activated –

- an Offline Request from the SCADA is initiated
- any vent/drain valves are in the not closed position

A check is undertaken to ascertain if the Prover Group is "Ready" based on the same product as that in the manifold for which it is intended to be placed off line. The Bypass Valve is opened and on successful completion, the Discharge and Inlet Valves are closed.

Any faults encountered during the running of the off line sequence will result in the sequence aborting, complete with all associated Alarming and Event Logging procedures.

4.24.4.8 Prover Drain sequences

Prover Drain Sequences are activated on receipt of –

- Any specific Prover Drain Request from the SCADA

A check is undertaken to ascertain if the Devices for the specific drain sequence are "Ready". If “Ready” the transfer valves for the other products are closed and once closed, the associated transfer valves and vent valve/s are opened and transfer routing valve/s is closed. On completion the Prover transfer pump is started.

When all low level switches on the Prover indicate that the Prover is empty or if the Prover Transfer pump has tripped on no flow, a timer is started. After a configurable time has elapsed, a further check is made to determine whether all low level switches on the Prover indicate that the Prover is empty. If not, the cycle commencing with starting the transfer pump is rerun.

If the Prover is empty, the Prover transfer valves are closed. Once closed, the transfer routing is opened, Prover vent valves are closed and the transfer pump stopped. Note that product will overflow to the sump in the event that the Prover transfer Tank is full.

Any device failures encountered during opening of the route will result in sequence aborting and any device failures encountered during the closing of the route will result in the sequence continuing, complete with all associated Alarming and Event Logging procedures.

4.24.4.9 Prover Fill sequence

Prover Fill Sequences are activated on receipt of –

- Any specific Prover Fill Request from the SCADA

A check is undertaken to ascertain if the Devices for the specific fill sequence is "Ready". If “Ready” the transfer valves for the other products are closed and once closed, the associated transfer valves, vent valve/s and transfer routing valve/s are opened. On completion the Prover transfer pump is started.

When the associated transfer tank indicates a low level (LL2) or if the transfer pump has tripped on no-flow, the Prover vent valves are closed. Once closed, the Prover transfer valves are closed and thereafter, the transfer routing valve is closed and the transfer pump stopped. Note that product will overflow to the sump in the event that the Prover is full.

Any device failures encountered during opening of the route will result in sequence aborting and any device failures encountered during the closing of the route will result in the sequence continuing, complete with all associated Alarming and Event Logging procedures.

4.24.4.10 Product Identification - Prover

Product selection shall be indicated to the operator by means of line fill colours. The Prover contents can be altered manually from the Prover Screen with overrides.
Where it is not possible to automatically determine the product in the prover (e.g. where there is only one transfer tank), the operator has to manually set the correct product from the Prover Screen with overrides.

Product Identification is done in the following manner:

Set Product

- Product in transfer tank if flow path from transfer tank (Transfer valves open and vent valve open) and
- Transfer Four-way valve is reverse and
- Transfer pump is running and
- Prover is not empty

  OR
- LP route for that product is online and
- Prover is not empty

  OR
- Product override and
- Prover is not empty

Reset product

- Prover is empty or
- Other product override Other products are not isolated or
- Other product override

Product unknown

Product unknown is indicated if no specific product bit is set but the prover is not empty.

When the Prover is empty, as indicated by both the high and low level switches not being activated, and the low level switch is then activated whilst the Prover is off line and product type cannot be determined by a flow path from the transfer tank; product in the Prover will be indicated as unknown.

4.24.4.11 Product Identification – Transfer Tank

Transfer tank product selection shall be indicated to the operator by means of fill colours. The transfer tank contents can be altered manually from the Prover Screen with overrides.

When transferring the Prover contents to the Transfer tank, the Transfer Tank contents will be the same as the transferred Prover contents.

Product Identification is done in the following manner:

Set Product

- Product in prover if flow path from prover (Transfer valves open and vent valve open) and
- Transfer Four-way valve is forward and
- Transfer pump is running and

- Transfer tank is not empty
  OR
- Product override and
- Transfer tank is not empty

Reset product
- Transfer tank is empty or
- Other product override

Product unknown
Product unknown is indicated if no specific product bit is set but the transfer tank is not empty.

4.24.5 DEVICE GROUP AVAILABILITY

The Prover Device group can be selected to either automatic or manual mode of operation. If selected in manual, all sequences within the Prover Group will not be Ready, and automatic control inhibited.

Prover control is further divided into product groups and all product groups have independent availabilities e.g. devices associated with the Petrol sequence may be unavailable whilst devices associated with the Diesel and ULP sequences may be available.

4.24.5.1 Prover On line sequences

The following conditions will render the Prover On Line Sequence "Not Available" and automatic control via the PLC will be inhibited e.g. Petrol

- Prover Inlet/Outlet/Bypass Valves in Local/Fault States (associated with petrol)
- Where multiple Prover Inlet/Outlet valves have been installed on a per product basis, any Prover Inlet/Outlet valves associated with products other than petrol being not closed
- Prover Not Pressurised (HI/LO Level Switches not activated)
- Prover content does not match the manifold contents
- Any Prover Vent or Drain valve not closed (associated with all products)

4.24.5.2 Prover Off line sequences

The following conditions will render the Prover Off Line Sequences "Not Available" and automatic control via the PLC will be inhibited e.g. Petrol

- Prover Valves in Local/Fault States (associated with petrol)

4.24.5.3 Prover Fill sequences

The following conditions will render the Prover Fill Sequences "Available" and automatic control via the PLC will be enabled e.g. Petrol

- All Prover Inlet & Outlet valves closed (associated with all products)
- Prover vent valve available
- Prover Petrol Drain valves available
- All Prover Drain valves associated with products other than petrol either available or closed
- Petrol Transfer Routing valves available where actuated and open where ZV's

- Petrol Transfer pump available

The following conditions are only evaluated as long as the fill sequence is not running and the four-way valve (XV FxR) is closed:

- Prover indicates the same product
- Petrol Transfer Tank level not high

4.24.5.4 Prover Drain sequences

The following conditions will render the Prover Drain Sequences "Available" and automatic control via the PLC will be enabled e.g. Petrol

- All Prover Inlet & Outlet valves closed (associated with all products)
- Prover vent valve available
- Prover Petrol Drain valves available
- All Prover Drain valves associated with products other than petrol either available or closed
- Petrol Transfer Routing valves available where actuated and open where ZV's
- Petrol Transfer pump available

The following conditions are only evaluated as long as the drain sequence is not running and the four-way valve (XV FxR) is open:

- Prover low levels indicate "empty" and the same product
- Petrol Transfer Tank level not low

4.24.6 ALARM STRATEGIES

4.24.6.1 No Valid Flow Path Interlock

Should the bypass valve and either the inlet or discharge valve be not open whilst delivering the operator will receive an alarm "Valves Mis-operated".

4.24.6.2 Product Mismatch Alarm

This alarm is triggered if a LP manifold route is opened that differs in product from the product that is currently in the prover. As example, the prover contains Petrol and a Diesel route is opened.

4.24.6.3 Prover EPV Valve Leak Detection

Alarm is triggered if the Flow Switch is activated when all of the associated EPV valves are either closed or open (i.e. fully seated) and after a configurable time delay has elapsed.

4.24.6.4 Prover transfer pump No Flow

Alarm is triggered if the Flow Switch is not activated when the respective Prover Transfer Pump is started and after a configurable time delay has elapsed.

4.24.7 INTERLOCKING STRATEGIES

The following interlocking strategies have been defined for the Prover Device Group:

4.24.7.1 Hard wired interlocks

Nil.

4.24.7.2 PLC interlocks

4.24.7.2.1 Prover Transfer Pump NO FLOW

Prover Transfer Pumps are interlocked to the respective flow switches. The pumps will be interlocked off if there is no flow after the pump has been running for a configurable time, in the PLC.

4.24.8 GRAPHIC REPRESENTATIONS

Control System dependant – refer to LSX and PCS7 Typicals.

Multi-product with transfer tanks

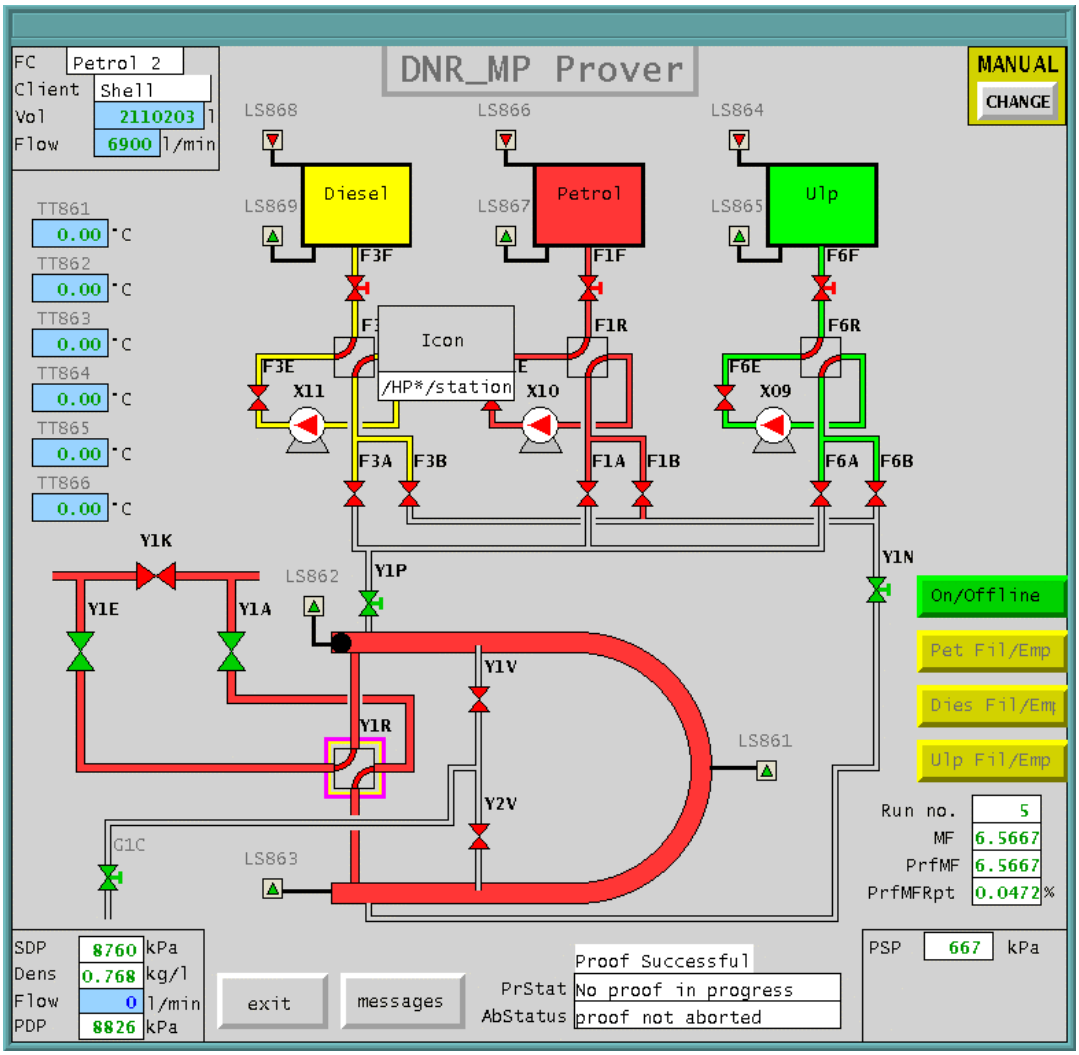

Single Product no Transfer Tanks

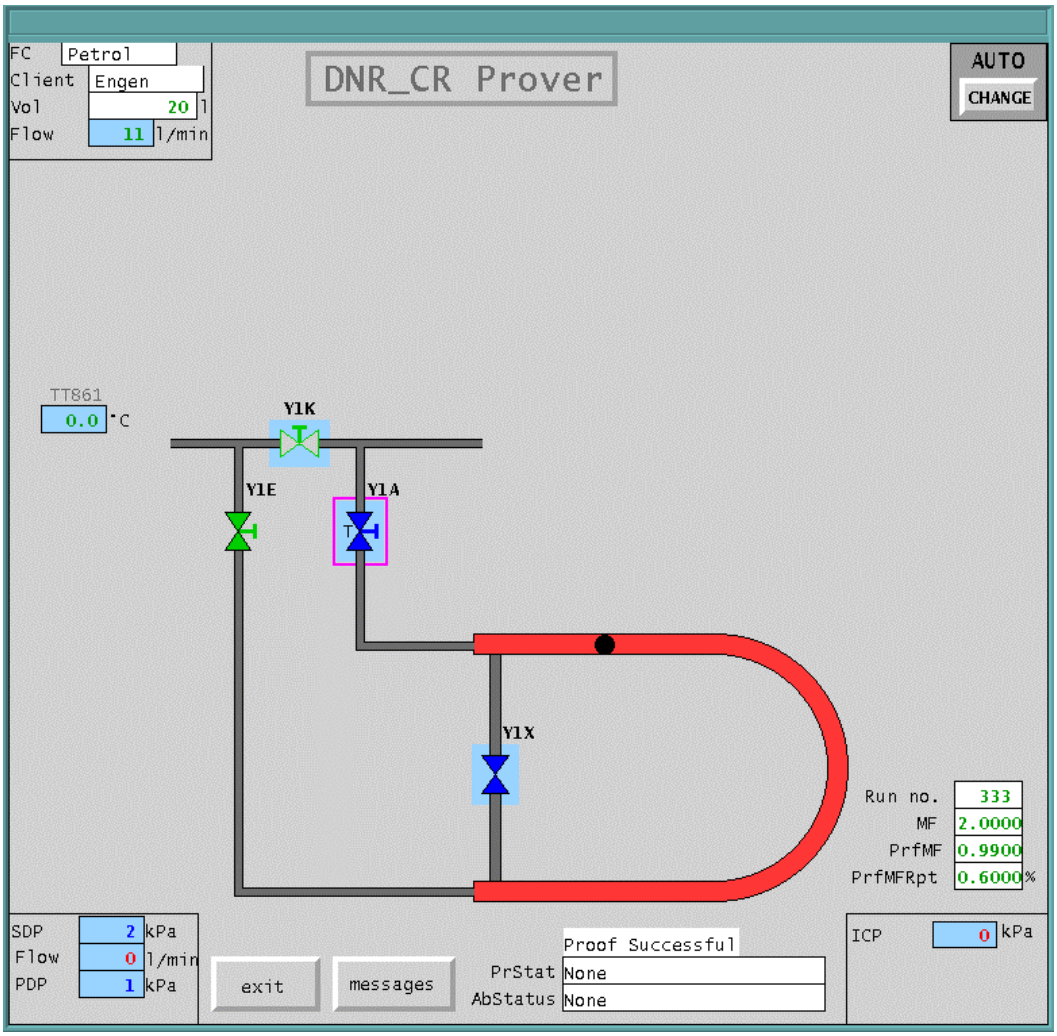

4.24.9 TYPICAL SEQUENCE FLOWCHARTS & AVAILABILITY SCHEDULES

4.24.9.1 Typical Sequence Flowcharts

Typical sequence flow charts are available on request.

4.24.9.2 Typical Availability Schedule

Typical Availability Schedules are available on request.

4.25 ROAD AND RAIL TANKER LOADING/OFFLOADING

Road / Rail Tanker Loading/Offloading is designed and operated in compliance with API 1004 recommended practises ('Bottom Loading and Vapour Recovery for MC-306 and DOT-406 Tank Motor Vehicles'). Requirements incorporate both preset control of the loading process as well as an independent shutoff system for safety.

Facilities for Road/Rail Tanker Loading/Offloading include transfer pumps, strainer/de-aerator combinations, flow metering, control valves, loading arms, batch controllers and overfill/earth monitoring protection systems.

4.25.1 GROUP DESCRIPTION

Control of the transfer process is directly and independently controlled and monitored by the batch controller. To this end the control valve, flow meter and associated instrumentation, overfill and earth-monitoring equipment are directly interfaced to the batch controller.

The transfer pump is controlled by the control system on request by the batch controller. Routing and other safety related interlocks are controlled from the control system with permissives issued to the batch controller.

Control and Monitoring functionality via the control system shall be achieved via the following interface:

Instrumentation

Batch controller start request	FQIC 711_IRC
Batch controller ready indication	FQIC 711_RDY

Pumps

Transfer pump to road tanker X xx

Valves

Shutoff Isolation valve XV xxx

Routing valves (where required)

4.25.2 MODES OF CONTROL

The Group shall be controllable locally from the Contrec 1010 Batch Controller installed at the Pump Station.

4.25.3 MODES OF OPERATION

All devices shall have the following Modes of Operation:

- Local

4.25.4 GROUP FUNCTIONALITY

4.25.4.1 TMS interface

The TMS (MES) / SAP interface still needs to be defined.

4.25.4.2 Batch Controller / Preset

Each tanker-loading arm has its own batch controller. This is a standalone device and handles all aspects of safety and metering as regards the transfer of product from the Intermix Tank to the Road Tanker. For details of this functionality, the reader is referred to the Contrec 1010 Preset Technical and Operational Manuals.

The batch controller has a hardwired interface to the PLC as follows:

- The PLC sends a ready signal to the batch controller indicating that all associated interlocks are met. The batch transfers are stopped if the signal is low. This signal status will be displayed on the SCADA graphic.
- The PLC receives a start request from the batch controller once all batch controller safety interlocks are met, the PLC Ready signal has been received and the operator has initiated a load request from the Preset. This signal is held high for the duration of a delivery. The transfer pump will be started and run for the duration that this signal is held high.

4.25.4.3 Transfer Pump Control

If the PLC gets a start request from the batch controller, the PLC will start the pump. If the start request is lost, the PLC will stop the pump.

4.25.4.4 Batch Controller Ready Signal

For tanker offloading, the batch controller ready signal is given if the following conditions are met:

- Tank level is not greater than the normal fill level
- Transfer Pump is available
- Tank outlet valve closed
- Routing valves are open
- Gantry E/Stops are healthy
- Tank status, where required

For tanker loading, the batch controller ready signal is given if the following conditions are met:

- Tank has no low level
- Transfer Pump is available
- Tank Inlet valve closed
- Routing valves are open
- Gantry E/Stops are healthy
- Tank status, where required

4.25.4.5 Transfer Shutoff/Isolation

In the event that the Road/Rail Tanker indicates a high level, the overfill protection system interfaced into the preset controller will ensure that the control valve is closed and the transfer terminated.

In addition and in compliance with API 1004, an independent shutoff/isolation valve will be automatically interlocked closed by the control system on request from the batch controller. This valve will be interlocked by the control system on the basis of the preset start request signal i.e. during a delivery and on removal of the start request, this valve will be interlocked closed.

4.25.5 ALARM STRATEGIES

None

4.25.6 INTERLOCKING STRATEGIES

The following interlocking strategies have been defined for the Device Group:

4.25.6.1 Hard wired interlocks

None

4.25.6.2 PLC Interlocks

4.25.6.2.1 Transfer Isolation Interlock

The associated transfer isolation valve will be interlocked closed if the preset start request signal is removed and the route is online to tanker loading.

4.26 TANK FARM

4.26.1 GROUP DESCRIPTION

This Device Group relates to the management and operation of facilities that accumulate volumes of petroleum products **within** the TPL Pipeline infrastructure. Accumulator Tanks are used to hold dedicated product, and Intermix Tanks mixed product/slops.

This Device group details control and operating facilities related to tank farms that are owned and operated by Transnet Pipelines. In these cases, pipeline operations and distribution operations is divided on the following basis:

1. **Pipeline Operations:**
1.1 Pipeline Deliveries into and out of tanks (accumulator and intermix tanks)
1.2 Quality Assurance of product within tanks
1.3 Inter-tank Transfer and Circulation (where required)
1.4 Tank Farm Management

2. **Distribution Operations:**
2.1 Road and Rail Tanker Distribution

In cases where Transnet Pipelines delivers or intakes product from tankage owned and operated by other parties (companies), these transactions will be performed 'across the fence'. In other words, line-up into the relevant tanks will remain the responsibility of the client, as will all other tank farm management functions.

FACILITIES IN TANK FARMS OWNED AND OPERATED BY TPL.
Facilities to meter product taken in and manage product held and facilities to either deliver product to companies, into the mainline network or distribute to road and rail tankers, exist at these depots; as does inter-tank transfer facilities, used to transfer product between the various tanks.

Standards of control are in place at all tank farms and include Intake Metering and Tank Level Measurement facilities (either analogue or Tank Gauging Systems).

Where the requirement is identified, tanks may be equipped with Overfill Protection Systems in accordance with API 2350 and Buncefield Final Report recommendations. In this regard, two independent analogue level detectors are installed on each tank as follows:

•First Level Transmitter: This analogue level signal will be used for level alarming, display and control purposes and will be derived from either a level transmitter or tank gauging head. In the case of the TGS, an uncompensated analogue level will be wired from the head into the PLC for this purpose. Levels will be displayed in percentage format.

When TGS Systems are installed, compensated volumes will be displayed on the SCADA Graphics as additional information.

•Second Level Transmitter: An independent analogue SIL rated over-fill protection system. A Hi-hi alarm signal from the protection system is wired into the PLC and used for alarming and interlocking purposes. In addition, the analogue level signal is wired into the Control System and used for comparison purposes.

Tank levels have been identified and implemented as follows:

•Level One (Normal Fill Level): This is the fill level that may not be exceeded during normal operations. Alarming and operator intervention is required on reaching the normal accumulator fill level.

•Level Two (High Level): On reaching this level, alarming and automatic control system intervention will occur, shutting down the associated control valve.

•Level Three (High High Level): In the event that this high-high level has been compromised, an independent, hardwired, SIL rated control system will close the relevant accumulator inlet valve. Alarming and status information will be relayed to the control system.

Control and Monitoring functionality from the control system shall be achieved via the following interface:

Valves
Inter-tank transfer valves

Instrumentation
Tank level transmitters / Tank Gauging Systems (Operational)
Tank Level Transmitters (Overfill Protection)

4.26.2 MODES OF CONTROL

The Tank farm Device Group shall be controllable both locally from the SCADA System installed at the Pump Station as well as remotely from the Master Control Centre in Durban.

4.26.3 MODES OF OPERATION

All devices related to the Tank farm Device Group shall have the following two Modes of Operation:

- Local
- Manual

4.26.4 GROUP FUNCTIONALITY

4.26.4.1 Tank Statuses

In order to manage product within tanks, the following tank statuses are currently assigned to tanks:

1. **Available Status**:

   When the tank is not selected for any other function and devices associated with the tank have no fault (i.e. tank inlet and outlet valves are available and instrumentation is healthy), the tank is set to 'AVAILABLE'.

2. **Inlet Status**:

   Tank is automatically assigned an 'INLET' status when the tank is lined-up for intake. In this state, the outlet valves of the tank are automatically interlocked closed. Only tanks that are AVAILABLE are able to be lined-up for intake.

   Whilst the tank is receiving product, the tank status changes to 'INLET RUNNING'.

3. **Tank Circulation and Inter-tank Transfer**:

   Where manifold piping permits tank circulation and inter-tank transfer, these operations may be permitted. Tanks must be in the 'AVAILABLE' state prior to transfer. When performing inter-tank transfer, the source tank will be tagged ' SOURCE' and the receiving tank 'DESTINATION'. Whilst product is being transferred, the tank statuses change to 'SOURCE TRANSFERRING' and 'DESTINATION TRANSFERRING'. When performing tank circulation, the tank will be tagged 'CIRCULATION' and "CIRCULATING' when product transfer is in progress.

   Tanks will be available for 'QC Required' select on completion of inter-transfer or circulation.

4. **QC Required**:

   On completion of an intake or inter-tank transfer, quality control is required to be performed on the tank contents. In order to prepare the tank for QA, the operator selects 'QC Required' from the control system. The selected tank's inlet and outlet valves are then interlocked closed and the tank status changes to that of 'QC REQUIRED'. 'QC Required' may be selected by the operator on completion of an intake, inter-tank transfer or circulation.

5. **Reserved for Working**:

   When a tank status indicates 'QC REQUIRED' the operator is required to complete the requisite quality analyses and fill in the associated QC Report. This report is normally completed within the MES System, and on completion, the TMS System checks whether the values entered fall within acceptable limits. If so, and the operator requests a 'QC Release', the MES System initiates a 'QC Release' and the tank status changes to that of 'RESERVED FOR WORKING'. If the MES is unavailable, the operator will be required to review the quality data, and will initiate a manual 'QC Release'.

   If QC fails, the selected tank inlet and outlet valve interlocks are released and the tank status changes to 'AVAILABLE'.

6. **Working Status**:

   Once QC Release has been issued for the selected tank, the tank status changes to 'RESERVED FOR WORKING' and the operator is free to select the tank for 'WORKING TANK'.

   When the operator has selected the tank for 'WORKING', the control system automatically captures the tank level via the Tank Gauging System. If the TGS is faulty, the operator will be responsible for performing a manual tank dip, and entering the information into the QC Report.

   In WORKING mode, all inlet valves are automatically interlocked closed and the outlet valve is opened.

4.26.4.2 Tank Level Control Response

4.26.4.2.1 Tank Normal Fill Level – Control Response

This level may be defined as the level to which the tank will intentionally be filled on a routine basis, using the normal process control system. **Note: Normal Fill Level should never be exceeded under normal operations.**

Level in each tank is continuously monitored by means of a level transmitter. In Terminals, this level transmitter may be a tank gauging system. When Tank Gauging Systems (TGS) are installed, the uncompensated analog level measurement is configured within the TGS head and hardwired to the control system for alarm and monitoring purposes.

When the normal fill level is reached in the receiving tank, an alarm will be activated to instruct the operator to change receiving tanks. Normal Fill Level is set at five minutes at full flow rates (configurable) below Tank High Level.

4.26.4.2.2 Tank High Level – Control Response

Should the operator not take action on receiving a normal fill level alarm, the tank will continue to fill until a high level alarm is activated. On exceeding this level, the control system will automatically send a close signal to the relevant feeder line flow control valve closing the flow control valve down at a reduced rate, so as not to introduce a pipeline surge condition. A signal is sent in parallel to the Pipeline Control System to request the sequential shutdown of the relevant pipeline.

When Tank Gauging Systems (TGS) are installed, the uncompensated analog level measurement may be configured within the TGS head and hardwired to the control system for alarm and monitoring purposes.

4.26.4.2.3 Tank High-High Level – Control Response

Should the control valve action fail, the tank will continue to fill until a high-high level is reached. This level is measured by a SIL rated, independent level transmitter, wired to an independent overfill protection system and will automatically interlock the relevant tank inlet valve to close, thus isolating the associated tank from the pipeline flow. Level and associated alarms will be transmitted from this overfill protection system to the control system for operator action.

4.26.4.2.4 Inter-tank Transfer High Level – Control Response

Inter tank transfer will follow the same rules as per accumulator high level control. The differences between the two are as follows:
At high level the spillback control valve will be closed and the booster pump stopped.

4.26.4.2.5 Inter-tank Transfer High High Level - Control Response

At high-high level the spillback tank inlet valve will also be interlocked closed via the SIL-rated independent overfill protection system.

4.26.4.3 Flush Tank

The Flush Tank is used in the case where excess water needs to be drained from an accumulator and for sampling of product (product quality assurance).

Whilst draining water through the Flush tank, the operator can detect the clean product within the Flush tank via the sight glass. The clean product remaining in the Flush Tank can then be pumped back into the accumulator, separated from any water or interface.

This operation will be conducted manually (locally) under TPL operating procedures.

4.26.5 DEVICE GROUP AVAILABILITY

This group does not have an associated availability.

4.26.6 ALARM STRATEGIES

The following conditions will result in alarms being issued.

4.26.6.1 Tank Levels

Normal-Fill, High, Low and Low-Low levels will be alarmed via set-points configured in the control system based on the first Level Transmitter (level transmitter or uncompensated level wired from the TGS head).

Tank High-High level will be alarmed via an independent SIL rated level transmitter, interfaced into the Control System.

4.26.6.2 Tank Level comparison

Where two level transmitters have been installed on a tank (one for control and the other for SIF functionality), both analogue signals will be interfaced into the control system and compared against each other. Deviations greater than a pre-defined set point will be alarmed as 'Level Transmitter failure'.

4.26.7 INTERLOCKING STRATEGIES

The following interlocking strategies have been defined for the Tank Farm Device Group:

4.26.7.1 Hard wired interlocks

4.26.7.1.1 Tank High-High Level

If a tank high-high level is activated, the associated tank inlet valves are interlocked closed by an independent SIL-rated Overfill Protection System.

4.26.7.2 PLC Interlocks

4.26.7.2.1 Tank High-High Level

If a tank high-high level is activated, the associated tank inlet valve/s are interlocked closed.

4.26.7.2.2 Tank High Level

If a tank high-level is activated, the associated control valve is interlocked closed.

4.26.7.2.3 Tank Low Level

If a tank low-low level is activated, the associated transfer pump is tripped.

4.26.8 GRAPHIC REPRESENTATION

Control System dependant – refer to LSX and PCS7 Typicals.

4.27 INTERMIX BLEND CONTROL

4.27.1 GROUP DESCRIPTION

Intermixture blending facilities at the pump stations comprise of dedicated intermix tanks, metering and pumping facilities. Accurate control of blending into product being delivered is required in order to ensure that product is not delivered out of specification. The flow control loop Auto / Manual can be selected independently of the Intermix Blending group. The volume injected is measured by means of a counter module that counts the pulses per unit volume coming from the flow meter.

Pressure and temperature compensation of Intermix blend volumes is not required and thus pressure and temperature compensation need not be installed.

Control of the Intermix Blend Device Group is achieved via interface to the following equipment:

Valves
Blend Inlet and Outlet Valves
Blend Recirculation Valves
Intermix Tank Inlet and Outlet Valves
Blend Pump Suction and Discharge Valves
Blend Flow Control Valve/s where required
Blend Flow Variable Speed Drive where required

Pumps
Blend Pumps

Instrumentation
Blend Flow meters
Blend Pump Flow Switches

4.27.2 MODES OF CONTROL

The Blend Device Group shall be controllable both locally from the SCADA System installed at the Pump Station as well as remotely from the Master Control Centre in Durban.

4.27.3 MODES OF OPERATION

All devices related to Blending shall have the following three Modes of Operation:

- Local
- Manual
- Automatic

4.27.4 GROUP FUNCTIONALITY

4.27.4.1 Overview

4.27.4.1.1 Blend Functionality

Blending may only be initiated when a primary route is online, online status of deliveries being established both in Auto/Manual.

When blending is initiated (blend valve is not closed) a counter is started which in turn will count pulses from the flow meter. (1 pulse * variable factor = 1 litre of intermix).

Blend volumes, batch volumes, etc are all reset and the counter starts from zero for a new delivery, when both the consignee and blend outlet valves are opened for the first time.

Blending will remain active for the duration of a delivery i.e. the blend valve may be closed and opened without the volumes being reset and with the blend totals continuing to add up.

Blend meter factor cannot be changed whilst blending is in progress.

Blending shall continue during transitions across consignees of like product.

Blend pulses will be ignored whilst blend outlet valves are closed, to cater for blend recirculation and inter tank transfer through the blend meter.

4.27.4.1.2 Blend Flow Control

Either a Flow Control Valve or Variable Speed Drive installed on the respective Blend Manifolds is used for closed loop control, to control Blend Flow rates. In this regard, the Flow Control Loop shall have separate auto/manual modes of operation, as detailed in Section 4.10.1.3 Flow Control Device Group).

The operator, prior to initiating blending, is required to enter the contaminant value. This value is used along with compensated blend and delivery flow rates (as measured by the respective flow meters) to control the Blending rate automatically, provided the Blend Flow Control Loop has been placed in Automatic. Contaminant values for the various products may be altered in the online reports.

Desired Blend Flow Rate Setpoint is calculated from the formula:

$$\text{Desired Blend Flow Rate Setpoint} = \frac{\text{Blend Percentage}}{\text{Contaminant percentage}} \times \text{Delivery Flow Rate}$$

where

- Blend Percentage is limited to a maximum of 0.25% into Diesel and 0.5% into Petrol. If neither product is identified, the default is set to 0.25%.
- Contaminant Percentage entered is derived from Lab results e.g. If blending into Petrol is required, and the associated Intermix Tank sample indicates a 30% Diesel component and 70% Petrol component, then the Contaminant Percentage is 30%.

4.27.4.1.3 Blend Compensation

Compensation of the blend flow rate is performed using a product specific meter factor. Meter factors are automatically selected according to the status of the Blend outlet valve. Meter Factors are configurable under password access rights.
Litres blended = pulses * 1/K factor

4.27.4.1.4 Operator Interface

The following information is displayed on the SCADA:

- Blend flow rate
- Blend percentage HBlPC (updated on an hourly basis)
- Blend volume total BlTotal
- Blend meter factor BlMF

4.27.4.1.5 Route Selection

Four Buttons will be provided on the SCADA for Blend Route Selection:

- Source, Destination, Sequence On line, Sequence Offline

The Source button will be used to select the source Intermix Tank. The selected source will be displayed on the button (T1 – T4). The Destination button will be used to select the product to be blended. The selected product will be displayed on the button (Pet, Die, ULP). The PLC will then derive the route required for blending. Availability of the Online and Offline sequences associated with the selected route will be displayed on the Sequence Online/Offline buttons – the button will be greyed out if not available. Selecting the Sequence Online button will run the selected On Line Sequence, if available. Selecting the Off Line Sequence Button will run all blending routes offline, if available. The online button will be disabled if the selected route is not available or if a conflicting route is online already. The offline button will be greyed out if no source or destination is selected.

4.27.4.1.6 Reports

The following information is provided on the Hourly report:

- Blend Total during previous hour HBlhour
- Blend Rate expressed as a percentage of delivery Flowrate BlRate

The following information is provided on the Operations Delivery report:

- Blend Total EBlBatch
- Average Blend Percentage EBlActPc

4.27.4.1.7 Blended Volume Calculation

The Primary delivery route must be online before blending is allowed. If a route is not online the blend counters will be disabled.

As soon as the blend valve returns a not closed signal the blend counter is reset and started ready to count the pulses received from the blend flow meter. Additionally the three registers for Current blend volume, previous delivery and next delivery are also reset.

The **current counter value (C)** is the actual count from the counter module. This counter is reset on a 'start transition (more specifically, when second consignee status shows not closed)' or 'start blend (more specifically, when blend valve shows not closed)'

The **current blend volume register (X)** contains the volume blended dedicated to the original (first) consignee only. The value from counter C is transferred to register X as soon as a second consignee starts to open. Counter C is reset when this occurs.

The **previous delivery register (P)** contains the amount of Intermix, which was blended during a possible transition at the beginning of the current delivery.

The **next delivery register (N)** will contain the amount of intermix, which was blended during a possible transition at the end of the current delivery.

When the blending is started for the first time i.e. new blend cycle, the previous delivery register (P) is 0 (zero).
Therefore: Previous = 0.

The current blend volume is derived from the pulses counted until a transition has started (i.e. the second consignee shows not closed status) or if the blending valve is closed.

During the delivery, the blending may be stopped and restarted without the volumes being reset and end of hour totals continuing to add up.

If a transition is started, the blend volume counter (C) is stopped as soon as the transition consignee indicates a not closed feedback. The value from counter C is transferred to the current blend volume register (X). Thereafter counter C is reset and started, counting the next delivery volume i.e. when both routes are open during the actual transition.

Once the new route is online i.e. one of the consignees closed again, the blend volume counter (C) is stopped and the value transferred to the next delivery volume register (N). All the volumes and percentages are now calculated.

The formula for calculating the blended volume is:

$$\text{Delivery blended volume} = \frac{P}{2} + \text{Current volume} + \frac{N}{2}$$

FOR EXAMPLE:
Assuming we are online to consignee Caltex with Petrol and start blending. When the delivered volume is reached we will initiate a transition to consignee Shell without stopping to blend.

On commencement of blending (Blend valve not closed and delivery in progress), the registers are all reset and the Previous blend volume (in this case 0) is transferred from counter C to P? The counter is counting pulses from the flow meter.

Assuming we initiate the transition at the point when the blended volume is 1000 litres.

When the transition consignee (Shell) is not closed the current count (C) 1000, is transferred to the current blend volume register (X) and the counter C reset and started. The blend volume during the transition is now totalled in counter C.

Because we are online to two consignees the blended volume must be divided between the consignees.
When the original consignee is closed the counter value is transferred from counter C to the next delivery volume register (N) and the counter C reset and restarted ready to count the current blend volume for the new primary route.

Assume the next delivery-blended volume was 100.

Previous blend volume register (P) = 0
Current delivery blended volume register (C) = 1000
Next delivery blend volume register (N) = 100

At this point all volumes and percentages can be calculated.

From the formula we have: Total blended volume for delivery = $\frac{0}{2} + 1000 + \frac{100}{2}$

Therefore the blended volume is 1050.

After the calculation the next delivery blended volume register (N) is transferred to the previous delivery blended volume register (P), ready to be used for the next calculation.
All blend data for the delivery is entered to the FIFO block for easy retrieval of the MDS.

If we now initiate a transition to Mobil the current counter value (C) will be transferred to the current delivery volume register (X) e.g. 1900.
The counter (C) is reset and restarted to count the transition volume while both consignees are open. As soon as the primary consignee is closed the counter value (C) is transferred to the next delivery volume register (N) and the counter reset and restarted, ready to count the current blend volume for the transition route.

Assume the next delivery-blended volume was 160.

Previous blend volume register (P) = 100
Current delivery blended volume register (C) = 1900
Next delivery blend volume register (N) = 160

At this point all volumes and percentages can be calculated.

From the formula we have: Total blended volume for delivery = $\frac{100}{2} + 1900 + \frac{160}{2}$

Therefore the blended volume is 2030.

After the calculation the next delivery blended volume register (N) is transferred to the previous delivery blended volume register (P), ready to be used for the next calculation.
All blend data for the delivery is entered to the FIFO block for easy retrieval of the MDS.

The blend volume for a delivery to one consignee consists of half the volume blended in the previous transition P, the actual volume blended during the delivery X, and half the volume of the transition to the next consignee N.

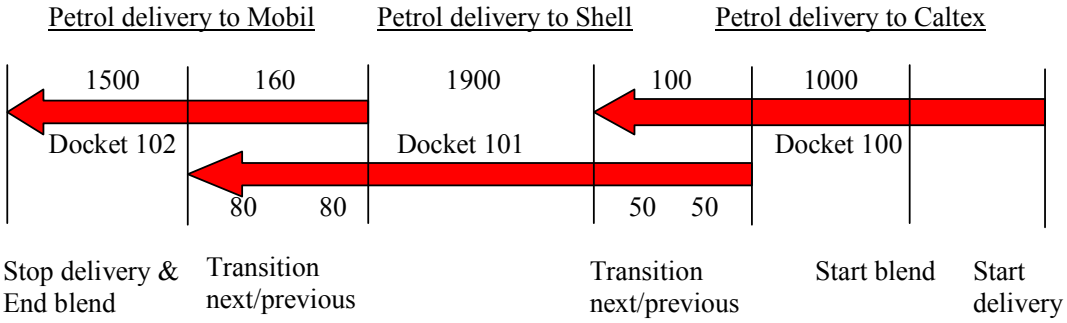

Blended total = P/2+C+N/2
= 160/2+1500+0/2
= 180+1500+0
= 1680

Blended total = P/2+C+N/2
= 100/2+1900+160/2
= 50+1900+80
= 2030

Blended total = P/2+C+N/2
= 0/2+1000+100/2
= 0+1000+50
= 1050

Where:
P = Previous blend volume register
C = Current delivery blended volume register
N = Next delivery blend volume register

4.27.4.1.8 Flowchart for Calculating Blending Data

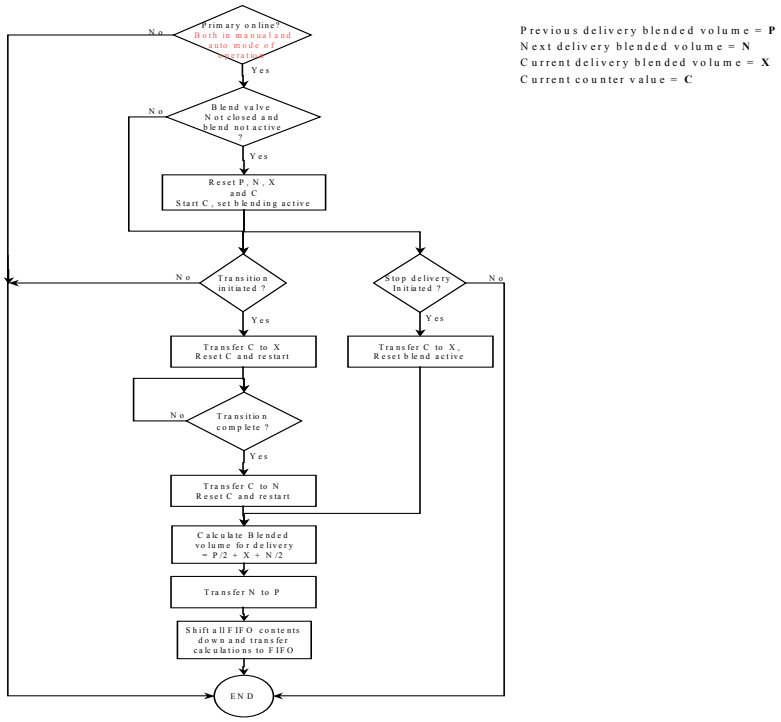

Blend calculations

4.27.4.2 Blend Online Control Sequence – per product

A specific Blend On-line Sequence is activated on receipt of –

- an Online Request from the SCADA

A check is undertaken to ascertain if the Product Blend Group is "Ready". Blending is placed on line by simultaneously opening/closing all appropriate valves. Once the route is on line, the Blend Pump is started, thus completing the sequence.

Where Recirculation facilities have been provided, recirculation will always be performed as part of the Online Sequence, prior to opening of the relevant Blend outlet valve. Recirculation will always be performed back to the Intermix Tank designated for Flow Relief.

Availability will be indicated on a selected route basis, with non-availability being indicated by the greying out of the Sequence Online button on the SCADA. Availability is determined by the status of all devices associated with a particular route within the Blending Device Group.

Any faults encountered during the running of the open route sequence will result in the sequence aborting, complete with all associated Alarming and Event Logging procedures.

4.27.4.3 Blend Offline Control Sequence – per product

A specific Blend Off-line Sequence is activated on receipt of –

- an Offline Request from the SCADA
- Selected Intermix Tank Lo Level (UL2)
- Blend Strainer Hi Differential Pressure
- Stop Delivery command
- all Consignee valves associated with a product being blended into are closed (Note that Accumulator and Intermix tank valves are excluded from this definition). Thus blending will be permitted during same product switches but not during cross product switches.

Blend Offline is performed irrespective of route device availability. Blending is placed off line by first stopping the pump and when stopped, simultaneously closing all appropriate routing valves.

Note: This differs from ALR EDS Rev L, which includes the following conditions: an offline request from SCADA, Low level on selected Intermix Tank, start of a delivery to an intermix tank and selected LP Route not online for that product. Issue to be resolved.

Any faults encountered during the running of the off line sequence will result in the sequence continuing to completion. Device faults during off line sequence shall be used to continue the Sequence, complete with all associated Alarming and Event Logging procedures.

4.27.5 DEVICE GROUP AVAILABILITY

All blending equipment belongs to the Intermix Blend Group, however availability will be determined on a per route basis. This will enable the operator to see what blending route can be placed online and will prevent conflicting routes to be placed online simultaneously. Availability will be indicated on a selected route basis, with non-availability being indicated by the greying out of the Sequence Online button on the SCADA. Availability is determined by the status of all devices associated with a particular route within the Blending Device Group.

Blend Route availability is determined as follows:

- Selected tank outlet valves available (actuated) and open (ZV)
- Other tank outlet valves (XV TxF) available or closed.
- Selected blend pump available
- Selected blend pump strainer available – ZV's open and no high PDT
- Selected blend valve available

- Other blend valves associated with other product blend pumps available or closed
- Required Intermix crossover valves available
- Other Intermix crossover valves available or closed
- LP routing online for selected intermix route
- No low level (LT 85x LL2) based on selected tank
- Any route online that requires the crossover valves.
- Tanker loading from the same tank

The offline sequence button will not be linked to availability.

4.27.6 ALARM STRATEGIES

4.27.6.1 Blend pump No Flow

Alarm is triggered if the Flow Switch is not activated when the respective Blend Pump is started and after a configurable time delay has elapsed.

4.27.7 INTERLOCKING STRATEGIES

The following interlocking strategies have been defined for the Blending Device Group:

4.27.7.1 Hard wired interlocks

None

4.27.7.2 PLC Interlocks

4.27.7.2.1 Blend Pump NO FLOW

Blend Pumps are interlocked to the respective flow switches. The pumps will be interlocked off if there is no flow after the pump has been running for a configurable time, in the PLC.

4.27.8 GRAPHIC REPRESENTATION

Control System dependant – refer to LSX and PCS7 Typicals.

Typical Blend Routing Group G52001-L4001

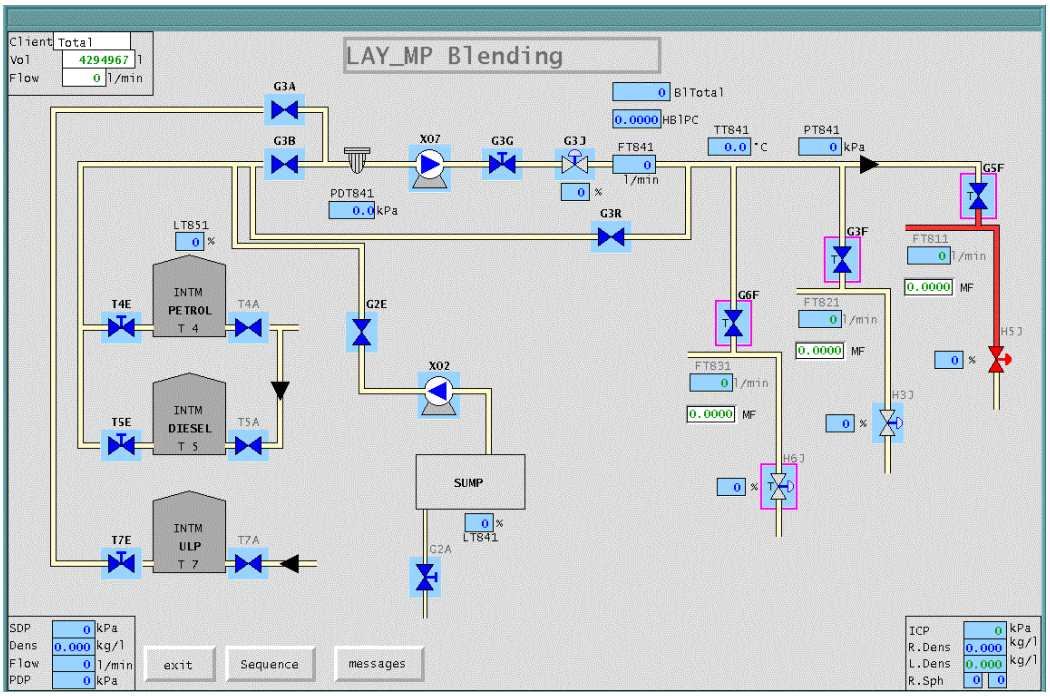

4.27.9 TYPICAL BLEND SEQUENCE FLOWCHARTS

Typical sequence flow charts are available on request.

5 LINE SEQUENCES – MASTER CONTROL CENTRE

This section has been included in the Automation Standard as an indication of previous attempts at defining overall Line Control Requirements for the TPL Pipeline infrastructure. It is envisaged that this section will be modified and further refined by the MAC Contractor as part of the NMPP Project.

5.1 INTRODUCTION

The purpose of this document is to specify line start-up and shutdown sequences as implemented in the Master Control Centre (MCC).

5.2 OPERATING CONCEPT

Line sequence software provides the operator with a tool whereby start-up and shutdown sequences can be configured and initiated from the MCC. Emergency shutdown sequences are also provided and may be initiated from the MCC. On completion of start-up of the pipeline, the system will continue to maintain the required flow-rate by control of the respective control valves and VSD drives, and through the staging of Pump Sets if selected.

5.2.1 SEQUENCE START-UP

In order to execute start-up, it is anticipated that the MCC control system will require the following information for each station:

- Selection and start-up order of the stations.
- Selection and start-up order of the Pump Sets.
- Flow-rate to be maintained
- Minimum station suction pressure required before a Pump Set start-up is permitted.
- Maximum station discharge pressure which if exceeded will prohibit a Pump Set start-up.

Start-up procedure will be as follows:

1. The operator fills in a table for the values stated above
2. The control system determines availability of all selected pump set device groups for each station. If available (Ready and in TELE mode), the sequence start button is enabled.
3. The operator presses the sequence start button.
4. If the station selected as first to start satisfies minimum suction and maximum discharge pressure criteria, the Pump Sets selected for that station would start in the specified order.
5. The focus then shifts to the second station, where the Pump Sets wait for criteria to be satisfied before starting.
6. This cycle continues until all selected stations selected have started.

Notes:

- If at any stage, a pump trip occurs, the start-up sequence will become unavailable, and the operator will need to continue the start-up manually. De-selection of the

tripped pump should render the sequence available again, after which the start-up sequence can be activated by pressing the sequence start enable button.

- Pump Sets and stations can be excluded from the shutdown sequence by allocating a priority of zero to them.
- As long as the sequence is running, the sequence start enable button will be deactivated. Once the sequence is complete, and if selected Pump Sets are available, the start enable button will be enabled only if there are more selected pumps to start. The sequence start disable button is activated as long as the sequence is running.
- An operator will be able to implement a two phase start-up by first selecting the first phase pumps to start, then allowing the pumps to start, then selecting the second phase pumps to start by reconfiguring the table, and re-starting the sequence.
- It is possible to select two or more stations with the same priority(order) if it is the operator's wish to start more than one station at a time. The stations will then start once the pressure criteria are met at the particular station. It will not be possible to have Pump Sets at a station with the same priority as it is not permissible to start more than one pump at a time.
- It will be possible to start up the pipeline purely on pressures by allocating priority 1 start-up to all stations.
- Operator intervention is possible at all times through the sequence start disable button and through direct control of the Pump Sets

5.2.2 FLOW CONTROL

Once the station has started up and the station start sequence is disabled, it will be possible to enable the flow control software for maintaining flow rate of the line. This software will only take care of starting and stopping of Pump Sets to maintain "coarse flow". The flow can then be fine tuned by selecting flow control on the closed loop controllers. The maintaining of coarse flow involves the maintaining of flow to within 10% of set point.

Coarse flow control is to be achieved by comparing set point flow to actual flow and changing pump stages to adjust accordingly. Should the actual flow be too low, then the control system will increase the number of stages at stations where the pressures are within acceptable limits (determined by values filled in start-up tables). Should the flow be too high, then the control system will reduce stages at stations where the pressures are within acceptable limits (determined by values filled in shutdown tables).
All stage changes will be done in the smallest steps possible, i.e.: if a stage change is required then a station will change its stages by one if possible. Should this not be possible, the next lowest number possible will be attempted.
If during a stage change, a Pump Set is encountered which is not available or not in auto mode, the flow control will automatically be disabled, and an alarm will be displayed in the alarm screen. The operator will then need to continue the stage change manually.
The flow control system will only be able to achieve what is practical in the stations, and it is not recommended that flow control is enabled if Pump Sets likely to be used in staging are not available.

5.2.3 SEQUENCE SHUTDOWN

In order to execute shutdown, the control system will need the following information for each station:

- Selection and shutdown order of the stations.
- Minimum station discharge pressure permissible for allowing a station shutdown and minimum incoming pressure for the downstream station.

Shutdown procedure will be as follows:

1. The operator fills in a table for the values stated above.
2. Availability of the stations to shut down is displayed.
3. The line shutdown enable button remains activated as long as the line shutdown is disabled. PumpSets selected that are not available (Available, Auto & Tele) to be stopped will not be stopped by the shutdown sequence.
4. The operator presses the line shutdown enable button.
5. If the station selected as first to shutdown satisfies pressure criteria, the Pump Sets running at that station will stop if they are available, in auto mode, and in Tele mode.
6. The focus then shifts to the second station, where the Pump Sets wait for criteria to be satisfied before stopping.
7. This cycle continues until all stations have shut down.
8. Once all available stations have shut down, all block valves are closed simultaneously, and the line shutdown is disabled.

Notes:

- As long as the sequence is running, the line shutdown enable button will be deactivated, and the disable button activated. Once the sequence is complete, the shutdown enable button will be activated and the disable button deactivated.
- Pump Stations can be excluded from the shutdown sequence by allocating a priority of zero to them
- It is possible to select two or more stations with the same priority(order) if it is the operator's wish to shut down more than one station at a time. The stations will then shut down once the pressure criteria are met at the particular station.
- It is possible to shut all stations down based purely on pressure by allocating all stations a priority of 1.
- Operator intervention is possible at any time through the use of the line shutdown disable button, or through direct control of the Pump Sets.

5.2.4 EMERGENCY SHUTDOWN

Two forms of emergency shutdown buttons will be supplied, viz:

- Emergency shutdown, which will stop all Pump Sets simultaneously when pressed.
- Leak shutdown, which stops all Pump Sets except the stations downstream of the leak, which will then trip when suction pressure is sufficiently low.

6 OPERATIONAL REPORTING REQUIREMENTS

6.1 INTRODUCTION

This is a new section introduced in Rev 2.1 of the Automation Standard and includes provisions originally made in Phases I and II of the Telecontrol Project as regards Operational Reporting requirements. It is envisaged that this section will be modified and further refined by the MAC Contractor as part of the NMPP Project.

The master control system will be used to centrally generate pipeline operational reports. The system must be configured to handle all the required information and generate the reports automatically when requested by TPL operational staff. Whilst the intention is to automatically populate these reports with data, provision must be made for manual entries as well.

The reporting system must provide :-

- The operator with the ability to be able to print reports on request.
- The ability to archive the reports and recall previously completed reports to screen if desired.
- Automatically archive the report after an elapsed period of time.
- The ability to access reports across the WAN.
- A facility to put a hold on each report
- The ability to freely configure report formats

6.2 GENERAL OPERATIONAL REPORTS – PUMP STATIONS

6.2.1 HOURLY REPORTS

Every hour, on the hour, the system shall produce the following information in report format.

6.2.1.1 Intake Station

Format :-

Depot:	_____ (i)	User ID:	_____
Time & Date:	_____ (ii)		
Amended:	Y/N		
Dens of Sump Tank:	_____		
Sump Tank Volume (%):	_____		
Comments:	_____		
Leg:	_____		
Product:	_____		
Batch:	_____		
ICP (kPa):	_____ (vi)		
PDP (kPa):	_____ (vii)		
SDP (kPa):	_____ (viii)		
Flow Rate through (l/min):	_____ (x)		
Throttling:	Y/N		
Pumps Running:	1 / 2 / 3 / 4 (ix)		
Slug No:	_____ (iii)		
Meter Reading (l):	_____ (v)		
Flow Rate Intake (l/min):	_____ (xi)		
Blending (l):	_____		
Total Litres/Hour:	_____ (iv)		
Temperature:	_____		
Leak Location	_____ (xii)	Volume	_____ (xii)
DRA Injection rate	_____ (xiii)	Optimised DRA Injection Rate	_____ (xiii)
Line Efficiency %	_____ (xiii)		

Notes :-

i) The system must identify from which station the information has been sourced.

ii) The time and date will be derived from the system clock.

iii) Slug numbers will be configured to be automatically read off the pipeline daily control sheet, the product can be displayed with a derivation of the slug number (i.e. the system will be configured to interpret that 01 in the slug number means that the product is petrol).

iv), v), vi), vii), viii), ix), x), xi) Will all be values that the system has real time information for via the telemetry network.

ix) The system must be configured to show which pumps are running i.e. 1 and 3 or 1 and 4. This information is also supplied by the telemetry.

x) Average flow rate through the station.

xi) Average flow rate at intake.

xii) Derived from Leak Detection System

xiii) Derived from Pump Optimisation System

6.2.1.2 Delivery Stations

Format :-

Depot:	_____ (i)	User ID:	_____
Time & Date:	_____ (ii)		
Amended:	Y/N		
Dens of Sump Tank:	_____		
Sump Tank Volume (%):	_____		
Comments:	_____		
Leg:	_____		
Product:	_____		
Batch:	_____		
ICP (kPa):	_____ (vi)		
SDP (kPa):	_____ (vii)		
Flow Rate through (l/min):	_____ (x)		
Throttling:	Y/N		
Slug No:	_____ (iii)		
Meter Reading (l):	_____ (v)		
Flow Rate Delivery (l/min):	_____ (viii)		
Blending (l):	_____ (ix)		
Total Litres/Hour:	_____ (iv)		
Temperature:	_____		
ETA of closest batch	_____ (xii)	Volume	_____ (xii)
ATA of most recent batch	_____ (xii)	Volume	_____ (xii)
ETA of closest pig/sphere	_____ (xiii)		
No. outstanding pigs/spheres	_____ (xiii)		
Leak Location	_____ (xiv)	Volume	_____ (xiv)
DRA Injection rate	_____ (xv)	Optimised DRA Injection Rate	_____ (xv)
Line Efficiency %	_____ (xv)		

Notes :-

i) The system must identify from which station the information has been sourced.
ii) The time and date will be derived from the system clock.
iii) Slug numbers will be configured to be automatically read off the pipeline daily control sheet, the product can be displayed with a derivation of the slug number (i.e. the system will be configured to interpret that 01 in the slug number means that the product is petrol).

iv), v), vi), vii), viii), ix), x) Will all be values that the system has real time information for via the telemetry network.

viii) Average flow rate at intake.
x) Average flow rate through the station.
xii) Derived from Batch Tracking System
xiii) Derived from Pig Tracking System
xiv) Derived from Leak Detection System
xv) Derived from Pump Optimisation System

6.2.1.3 Pump or Through stations

Format :-

Depot:	_____ (i)	User ID:	_____
Time & Date:	_____ (ii)		
Amended:	Y/N		
Dens of Sump Tank:	_____		
Sump Tank Volume (%):	_____		
Comments:	_____		
Leg:	_____		
Product:	_____		
Batch:	_____		
ICP (kPa):	_____ (vi)		
PDP (kPa):	_____ (vii)		
SDP (kPa):	_____ (viii)		
Flow Rate through (l/min):	_____ (x)		
Throttling:	Y/N		
Pumps Running:	1 / 2 / 3 / 4		
Slug No:	_____ (iii)		
Meter Reading (l):	_____ (v)		
Flow Rate Intake (l/min):	_____ (ix)		
Blending (l):	_____		
Total Litres/Hour:	_____ (iv)		
Temperature:	_____		
ETA of closest batch	_____ (xii)	Volume	_____ (xii)
ATA of most recent batch	_____ (xii)	Volume	_____ (xii)
ETA of closest pig/sphere	_____ (xiii)		
No. outstanding pigs/spheres	_____ (xiii)		

Leak Location	_____ (xiv)	Volume	_____ (xiv)
DRA Injection rate	_____ (xv)	Optimised DRA Injection Rate	_____ (xv)
Line Efficiency %	_____ (xv)		

Notes :-

i) The system must be configured to generate from where the information is received.

ii) Time and date will be derived from the system clock.

iii) Slug numbers will be configured to be automatically read off the pipeline daily control sheet, the product can be displayed with a derivation of the slug number (i.e. the system will be configured to interpret that 01 in the slug number means that the product is petrol).

iv), v), vi), vii), viii), ix), x) Will all be values that the system has real time information for via the telemetry network.

vii) The system must be configured to show which pumps are running and the number of stops associated with the active pumps.

x) The flow rate value is provided by a flow meter at each pump station. This value will be part of the telemetry control to the master control system, which will be configured to update the report.

xii) Derived from Batch Tracking System

xiii) Derived from Pig Tracking System

xiv) Derived from Leak Detection System

xv) Derived from Pump Optimisation System

6.2.2 TRANSMIX REPORTS

This report will be generated as and when a transmix goes through a pump station.

Format :-

Depot: _____ User ID: _____
Amended: Y/N Time & Date: _____

Interface Number:
ETA: _____
ATA: _____
Temp at Head (degC): _____
Temp at Tail (degC):
Density at Head (kgl): _____
Density at Tail (kgl): _____
Flow at Head (l/min): _____
Flow at Tail (l/min): _____
Average Flow (l/min): _____
Density Size (litres): _____
Hazy/Blackspot size (l): _____
Mins off spec after 3rd Sph _____
Size of Interface (litres) _____
Growth (l/km) _____
Time Started: _____
Time Completed: _____
No. of Moves: _____
Min ICP whilst in section: _____
Number of unprotected sph: _____
Idle pumps flushed: _____
Throttling: _____
Next Depot on the line: _____
Comments: _____

TIME	DENSITY	SPHERES IN	SPHERES OUT	COMMENTS
___:___	_____	___	___	_____
___:___	_____	___	___	_____
___:___	_____	___	___	_____
___:___	_____	___	___	_____

PUMP SWITCHES
Time: Result:

TRANSMIX INTAKES:

TANK	DENS BEFORE	DENS AFTER	VOL BEFORE	VOL AFTER	TOTAL SLOP
_____	_____ (kgl)	_____ (kgl)	_____ (l)	_____ (l)	_____ (litres)
_____	_____ (kgl)	_____ (kgl)	_____ (l)	_____ (l)	_____ (litres)
_____	_____ (kgl)	_____ (kgl)	_____ (l)	_____ (l)	_____ (litres)
_____	_____ (kgl)	_____ (kgl)	_____ (l)	_____ (l)	_____ (litres)

6.2.3 INTERMIXTURE BLENDED AND TRANSMIXES TAKEN OFF REPORTS

Intermixture blended and transmix taken off reports shall be configured for every station that handles transmixes, including the following stations :-

- Bethlehem
- Ladysmith
- Kroonstad
- Klerksdorp
- Alrode
- Langlaagte
- Waltloo
- Tarlton
- Rustenburg
- Coalbrook
- Witbank
- Airport

These reports shall be formatted as shown :-

Example:

INTERMIXTURE BLENDED AND TRANSMIX TAKEN OFF STATION : LADYSMITH
PERIOD: _____ to _____.

DAY	DATE	BLENDED	TRANSMIX	WEEKLY SLOP TANK COMPARI			OTHER REMARKS	
MON					BLENDED	TRANSMIX	EX TANK	EX SUMP
TUES				LOG/S				
WED				STA				
THUR				%				
FRI								
SAT				LSPROG				
SUN				STPROG				
TOTAL								

The master control system shall be configured to automatically update all reports for the period requested and dynamically fill in the date columns. Operational and calendar months do differ - the period is to be specified.

6.2.4 TRANSMIX AND INTERMIXTURE HANDLED

This report is to be generated weekly or upon request. The report shall be configured as shown. The master control system shall perform all sub total and total calculations.
Typical Example:

TRANSMIX AND MIXTURE HANDLED

PERIOD:- 19-May-08 TO 25-May-08

SLOP LEVELS EXCEEDING 60% OF ULLAGE WILL BE INDICATED IN RED

AREA	BEGINNING OF WEEK	EX SUMP	EX ACC TANK	RAILED / ROAD	TRANSMIX	BLENDED	DEL %	WORKING GAIN/LOSS	INCREASED DECREASED	END OF WEEK	SLOP GROWTH	MAX STN SLOP ULLAGE
LAY	0				0	0	0.00%	0	0		NO CHANGE	2,061,000
BHM	41,692	2,791			********	0	0.00%	0	2,791	44,483	MORE	74,000
KRO	171,688	3,785			0	0	0.00%	716	4,501	176,189	MORE	3,600,000
SBG	34,016	12,339			********	0	0.00%	0	12,339	46,355	MORE	93,000
CBK	4,095	16,440			0	14,520		0	1,920	6,015	MORE	1,000,000
SUB TOTAL	281,344	35,355	0	0	0	14,520		716	19,631	273,042	MORE	5,828,000
KRP	33,190	6,053			43,727	46,088	0.34%	11	3,703	36,893	MORE	339,100
ALR	1,168,650	0			179,314	549,302	0.77%	5,161	-364,827	803,823	LESS	3,200,000
LLA	102,083	0			50,669	53,763	0.21%	-7,402	-10,496	91,587	LESS	3,200,000
WAO	103,493	11,857			123,872	78,053	0.21%	2,689	60,365	163,858	MORE	1,040,000
TLR	297,365	0	188,510		57,760	0	0.00%	-135	-130,885	166,480	LESS	750,000
REFRACT	1,184,712		187,728		278,865	627,673	0.00%	-793	-161,873	1,022,839	LESS	6,000,000
RTR	202,947	0			5,207	0	0.00%	0	5,207	208,154	MORE	482,000
WIR	344,139	NO INFORMATION PROVIDED.			29,127	0	0.00%	#VALUE!	-344,139		LESS	622,292
APT	7,999	6,425			0	0	0.00%	0	6,425	14,424	MORE	N/A
SUB TOTAL	3,444,578	24,335	376,238	0	768,541	1,354,879		#VALUE!	-936,520	2,508,058	LESS	15,633,392
TOTAL	3,725,922	59,690	376,238	0	768,541	1,369,399		#VALUE!	-916,889	2,781,100	LESS	21,461,392

TOTAL SLOP DECREASED BY:- -944822

			TLR TO IRP				PROCESSED PRODUCT TO TLR				
			NORM	TRANSMIX EX SASOLBURG			NORM	TRANSMIX EX SECUNDA			NORM
LAY			70,000	KRP	182F14 - 183F03	22,707	25,000	WIR	181K03 - 182K18	29,127	35,000
LAY			70,000	KRP	183F03 - 183F14	21,020	25,000	WIR			35,000
LAY			70,000	KRP			25,000	WIR			35,000
LAY			70,000	KRP			25,000	WIR			35,000
LAY				KRP			25,000				
KRO			120,000	ALR	183F18 - 183F03	106,138	230,000	ALR	182K03 - 183K06	73,176	85,000
KRO			120,000	ALR			60,000	ALR			85,000
KRO			120,000	ALR			60,000	ALR			85,000
KRO			120,000	ALR			60,000	ALR			85,000
KRO			120,000								
KRO			120,000	WAO (1)	182K06 - 183F03	95,889	35,000	WAO	182K03 - 181F14	27,983	35,000
KRO			120,000	WAO			35,000	WAO			35,000
KRO			120,000	WAO			35,000	WAO			35,000
				WAO			35,000	WAO			35,000
CBK			NIL								
CBK			NIL	LLA	RACK DISPL	7,440		LLA			25,000
CBK			NIL	LLA	182F03 - 182F18	43,229	85,000	LLA			25,000
TRANSMIX			NORM	LLA			25,000	LLA			25,000
EX SASOLBURG				LLA			25,000	LLA			25,000
			25,000								
TLR			NO NORM	TLR	178F14 - 179F03	22,418	25,000	TLR			25,000
				TLR	RACK DISPL EX IRP	18,411		TLR			25,000
ALR			230,000	TLR	RACK DISPL EX IRP	16,931		TLR			25,000
ALR			230,000	I.R.P. (2)	F03-F14-F03	278,865	280,000	TLR			25,000
			20,000	RTR	180F03 - 181F14	2,452	20,000	RTR			20,000
				RTR	182F14 - 181F03	2,755	20,000	RTR			20,000
CBK			NONE	RTR			20,000	RTR			20,000
TOTAL		0		TOTAL		638,255		TOTAL		130,286	

*1 STRAIGHT RUN, NO SHUTDOWNS. ORIGIN ALRODE.

*2 ULP EX MPP ARRIVED AT SASOLBURG DURING NATREF 03 INTAKE. (NIL OFF EN ROUTE). PUSHED INTO 12" NORTH. NIL 0FF AT ALR OR LLX. INTERFACE STOOD IN PSD FOR 80.85 HOURS.

6.2.5 HIGH DISCHARGE REPORTS

As the TPL pipeline is rated for a certain Maximum Allowable Operating Pressure (MAOP) it is company policy not to exceed this pressure. The high discharge pressure report is produced to highlight when this pressure has been exceeded.

The master control system will monitor all the discharge pressures at each pump station. Thus if any pressure exceeds (configurable) KPa the system will be configured to write the information into a report format as shown:-

Example : High Discharge Report

DATE	STATION	PRESSURE	START	STOP	REASON
29/01/94	Durban	9500	10:30	11:15	Pump change
30/01/94	Hillcrest	9700	04:35	04:37	Pump trip at Howick

If the pressure ever exceeds the limit, the system should alarm the operator, and allow the operator to call up the report onto the operator screen. The operator will be prompted to input a reason for the deviation, where after the report will be filed back to disk.

Note : The pressure alarm set point shall be user configurable, for each pump station.

The operational manager will be able to access the report as and when required.

6.2.6 LOW INCOMING PRESSURE (ICP) REPORT

It is important that the suction pressure at each pump station remains above a certain level. The low pressure report is produced to highlight when low pressures have been registered.

The master control system will monitor all suction pressures at each pump station. Each pump station's low pressure level will have a configurable low level alarm point. If this alarm point is activated the system will be configured to write the information into a report format as shown.

Example : Low ICP Report

DATE	STATION	PRESSURE	START	STOP	REASON
29/01/94	Hillcrest	1000	10:30	11:15	Leak on line
30/01/94	Howick	500	04:35	04:37	Pump trip at Hillcrest

If the pressure ever goes low the system should alarm the operator and allow the operator to call up the report page onto the screen. The operator will be prompted to explain the alarm by typing the reason into the field provided.

The operational manager will be able to access the report as and when required.

6.2.7 PUMP REPORTS

Each pump station shall have a pump hours report configured in the master control system. The system will have all the necessary information available in the telemetry system from each pump station. The format of the report is shown below.

Pumpstation (1)

Pump	Hours Run for the Month	Total Hours
Pump 1	(2)	(3)
Pump 2		
Pump 3		
Pump 4		
Lube Pump		
Pump 1		
Pump 2		

Purge Air Fan Hours

Fan	Hours Run for the Month	Total Hours
Fan 1	(4)	(5)
Fan 2		

Control Room Fan Hours

Fan	Hours Run for the Month	Total Hours
Fan 1	(6)	(7)
Fan 2		

Field No.

(1) This field will be configured for each pumpstation on telecontrol and will show the name of the pumpstation.
(2) The system will accumulate data via telemetry being the actual hours the pump has run.
(3) Total hour is an accumulated total generated by the system from the total time the pump has run since it was last serviced. This figure will be re-settable by the operator at the outstation after each pump is overhauled, at either the outstation or the master control centre.
(4) As per field (2).
(5) As per field (3).
(6) As per field (2).
(7) As per field (3).

6.2.8 WEEKLY INTERMIXTURE TANK AND ACCUMULATOR TANK REPORTS

Weekly reports of transmix tank volumes and accumulator tank volumes must be produced by the system for each station. The period covered by the report will be from 00h01 on a Monday until 24h00 on a Sunday.

The following stations with allowance for future station additions are to be configured :-

- Ladysmith
- Kroonstad
- Klerksdorp
- Alrode
- Langlaagte
- Waltloo
- Witbank
- Tarlton
- Rustenburg
- Coalbrook

The format for the reports should be as follows :-

Weekly Intermixture and Accumulator Tank Report
Station : (1)
Week Ending : (2)

Intermixture Tanks

Position at Midnight Beginning of the Week ..... (3)	**Position at Midnight End of Week .....** (4)
Tank No. Litres	Tank No. Litres
(5)	(6)
Total = Litres	Total = Litres

Transmix Taken in for Period

Slug	**Tank**	**Litres**
(9)	(10)	(11)
		Total Litres

Products Delivered and Intermixture Blended for Period

Product	**Total Delivered**	**Blended**	**% Blended**
(12)	(13)	(14)	(15)
Totals			

Evaporation and working losses on intermixture tanks for period (16) litres.
Evaporation and working losses on accumulator tanks for period (17) litres.

Accumulator Tanks

Position at Midnight Beginning of the Week ..... (3)	**Position at Midnight End of Week .....** (4)
Tank No. Litres	Tank No. Litres
(7)	(8)
Total = Litres	Total = Litres

Product Taken in for Period

Slug	**Tank**	**Litres**
(18)	(19)	(20)
		Total

Product Delivered for Period

Slug	**Litres**
(21)	(22)
	Total

Field No.

(1) The station from where the report comes.
(2)-(4) Produced by the system (in all reports).
(5) Customized to account for each intermixture tank number and show the actual litres in each tank at the beginning of the week.
(6) The same as field 5 but the litre values will be for the end of the week.
(7),(8) The same as above except on the accumulator tank.
(9) The length of this field will be determined by the maximum amount of transmixes handled in any station in a week.
(10) This will also be configurable with the number of tanks used.
(11) Manually entered data with a total in litres calculated on all entries by the system.
(12) This field will be for product types and typed in manually.
(13) The accumulated product delivered and will also be a manual entry.
(14) As above.
(15) The system will calculate the blend litres as a percentage of the total delivery and display it in this field as a % blended. This information is available from the metering system.
(13)-(15) Will all be accumulated by the system and shown in the totals field.
(16),(17) Are losses. These values will be worked out by the operational staff at the outstations.
(18)-(22) Manual entries. The system will however add the litre totals in fields 20 and 22.

6.3 GENERAL OPERATIONAL REPORTS – MASTER CONTROL CENTRE

6.3.1 DAILY STATEMENT / OPERATIONS NOTICE

The daily statement consists of an overall report on the intakes and deliveries with information of shut downs.
The format of the report shall normally be configured as below.

OPS NOTICE ID:
OPS NOTICE No: PERIOD: yymmdd hh:mm yymmdd hh:mm

Copy: ___ - ___ - ___ - ___ - ___
From: Transnet Pipelines, Durban
NB:

INTAKES:

Slug Number	Volume	Period Start	Period Stop
___ - _____ / ___ - __	_____	yymmdd hh:mm	yymmdd hh:mm
___ - _____ / ___ - __	_____	yymmdd hh:mm	yymmdd hh:mm
___ - _____ / ___ - __	_____	yymmdd hh:mm	yymmdd hh:mm

FLOW RATES:
_____ (LPM)

INTERFACES:

STATION	POSITION	ETA	LAUNCH	RECEIVE
_____	_____	_____	_____	_____
_____	_____	_____	_____	_____
_____	_____	_____	_____	_____
_____	_____	_____	_____	_____

DELIVERIES

Slug Number	Volume	Period Start	Period Stop
___ - _____ / ___ - __	_____	yymmdd hh:mm	yymmdd hh:mm
___ - _____ / ___ - __	_____	yymmdd hh:mm	yymmdd hh:mm
___ - _____ / ___ - __	_____	yymmdd hh:mm	yymmdd hh:mm

ACC DELIVERIES DEPOT

Slug Number	Volume
___ - _____ / ___ - __	_____
___ - _____ / ___ - __	_____
___ - _____ / ___ - __	_____

Notes :-

1. Initial values are to be manually input. It is envisaged that these values will be automatically read in from the Scheduler Package, once an interface has been developed.

2. Once the pipeline has been started values will then be automatically updated, based on information gathered from the Batch Tracking System and Control System located within the Master Control Centre.

3. Where automatic updates are not possible, facilities to manually input the information will be made available. Note : Manual inputs shall be logged as "manual inputs".

6.3.2 WEEKLY STATEMENT

The weekly statement report has exactly the same format as the Daily Statement report, only the information is accumulated for the week.

The master control system must be configured to produce all the figures for the report automatically from the daily figures.

The system must print the period dates on the report.

6.3.3 MONTHLY STATEMENT

The monthly statement will again be a repeat of the daily and weekly statements with the information accumulated for the month. The from-and-to dates of the period must be selectable.

The master control system shall be configured to produce all the figures for the report automatically from the weekly figures

The month date must be printed on the report.

6.3.4 BI-ANNUAL STATEMENT

This report is the same format as above with the information accumulated for a six-month period. The from-and-to dates of the period must be selectable.

The master control system must be configured to produce all the figures for the report automatically from the monthly figures.

6.3.5 ANNUAL STATEMENT

As above with the information accumulated for a twelve month period. The from-and-to dates of the period must be selectable.

The master control system must be configured to produce all the figures for the report automatically from the monthly figures. Where values are missing, predictions based on past history should be made.

6.3.6 PIPELINE SHUTDOWN REPORT

The pipeline is shutdown from time to time. When this occurs, the system shall generate a report with information from each pump station.

Half an hour before the line is to be stopped, the temperature and the discharge pressure for each pump station is to be recorded every 15 minutes for 1 hour after shutdown, both readings are to also be recorded. All data from stations not reporting to the master control system will be entered manually.

Once each page is filled the report will be archived to disk and a new page generated by the system.

The format of the report is as follows:-

		FFL		HLR			HWR			LAY	
DATE	TIME	TEMP	DIS	TEMP	ICP	DIS	TEMP	ICP	DIS	TEMP	ICP

		LAY		VRN			BEM			KRO	
DATE	TIME	TEMP	DIS	TEMP	ICP	DIS	TEMP	ICP	DIS	TEMP	ICP

		DNR		HLR			HWR			LAY		
DATE	TIME	TEMP	DIS	TEMP	ICP	DIS	TEMP	ICP	DIS	TEMP	ICP	DIS

		SGB		ALR		SEC		ALR	
DATE	TIME	TEMP	DIS	TEMP	ICP	TEMP	DIS	TEMP	ICP

		ALR		LLA			TLR			RTR	
DATE	TIME	TEMP	DIS	TEMP	ICP	DIS	TEMP	ICP	DIS	TEMP	ICP

		SEC		WIR		CBK	
DATE	TIME	TEMP	DIS	TEMP	ICP	TEMP	ICP

		CBK		JSA	
DATE	TIME	TEMP	DIS	TEMP	DIS

		ALR		JSA			WAO	
DATE	TIME	TEMP	DIS	TEMP	ICP	DIS	TEMP	ICP

6.3.7 PIPELINE LOG SHEETS

Pipeline Log Sheets are produced on a per pipeline basis. The format and detail of the log sheets shall be in accordance with the following:-

1. DG112788 Rev Multiproducts Pipeline DNR – SBG
2. DG107172 Rev C Multi-products Pipeline SBG – Inland Network

3. PS0258 Rev K Multi-products Pipeline SEC WIR
4. PS1858 Rev I Crude oil Pipeline FYN - CBK

6.4 OPERATIONAL REPORTS – SPECIFIC PUMP STATIONS

6.4.1 INTERMIX REFRACTIONATOR PLANT

6.4.1.1 Hourly Reports

Every hour, on the hour, the system shall produce the following information in the format specified:-

DAILY / HOURLY REPORT			
FIRED HEATER:			
Diesel intake volume (FT592)	l/min	Diesel intake pressure (PT592)	kPa
Pilot gas intake pressure (PT595)	KPa	Air inlet pressure (PT593)	kPa
Process flow inlet (FT591A&B)	l/min	Inlet 1st pass temp (TT592A)	degC
Inlet 2nd pass temp (TT592B)	DegC	Process outlet pass temp (TT597B)	degC
Arch pressure (PT591)	KPa	Flue Gas at Arch temp (TT599)	kPa
Tube skin pass 1 temp (TT593A)	DegC	Tube skin pass 2 temp (TT593B)	degC
Tube skin radiant outlet 1 temp (TT596A)	DegC	Tube skin radiant outlet 2 temp (TT596B)	degC
Tube skin radiant 1 temp (TT595A)	DegC	Tube skin radiant 2 temp (TT595B)	degC
DISTILLATION COLUMN:			
Feed volume diesel to tank 6 (FT571)	l/min	Bottom delivered product vol (FT573)	l/min
Over head pressure (PT574)	KPa	Top pressures (PT571-2-3)	kPa
Bottoms pressure (PT576)	kPa	Bottoms temperature (TT575)	degC
Tray 12 temperature (TT572)	degC	Top temperature (TT571)	degC
Product outlet temperature (TT573)	degC	Heat exchanger outlet temp (TT561)	degC
Column bottom pump pressure X03 (PT577)	degC	Column bottom pump pressure (PT578)	degC
REFLUX DRUM:			
Product volume Petrol to Tank 5 (FT582)	l/min	Reflux drum pressure (PT581)	kPa
Reflux drum temperature (TT581)	DegC		

6.4.1.2 Daily Reports

Every day at 24H00, the system shall produce the following information in the format specified:-

DAILY / HOURLY REPORT			
FIRED HEATER:			
Diesel intake volume (FT592)	l/min	Diesel intake pressure (PT592)	kPa
Pilot gas intake pressure (PT595)	KPa	Air inlet pressure (PT593)	kPa
Process flow inlet (FT591A&B)	l/min	Inlet 1st pass temp (TT592A)	degC
Inlet 2nd pass temp (TT592B)	DegC	Process outlet pass temp (TT597B)	degC
Arch pressure (PT591)	KPa	Flue Gas at Arch temp (TT599)	kPa
Tube skin pass 1 temp (TT593A)	DegC	Tube skin pass 2 temp (TT593B)	degC
Tube skin radiant outlet 1 temp (TT596A)	DegC	Tube skin radiant outlet 2 temp (TT596B)	degC
Tube skin radiant 1 temp (TT595A)	DegC	Tube skin radiant 2 temp (TT595B)	degC
DISTILLATION COLUMN:			
Feed volume diesel to tank 6 (FT571)	l/min	Bottom delivered product vol (FT573)	l/min
Over head pressure (PT574)	Kpa	Top pressures (PT571-2-3)	KPa
Bottoms pressure (PT576)	Kpa	Bottoms temperature (TT575)	DegC
Tray 12 temperature (TT572)	DegC	Top temperature (TT571)	DegC
Product outlet temperature (TT573)	degC	Heat exchanger outlet temp (TT561)	DegC
Column bottom pump pressure X03 (PT577)	degC	Column bottom pump pressure (PT578)	DegC
REFLUX DRUM:			
Product volume Petrol to Tank 5 (FT582)	l/min	Reflux drum pressure (PT581)	kPa
Reflux drum temperature (TT581)	DegC		
TANK VOLUMES:			
Diesel fuel level Tank 4 (LT554)	m^3		
Petrol refined product Tank 5 (LT555)	m^3	Diesel refined product Tank 6 (LT556)	m^3
Intermix feed Tank 7 (LT557)	m^3	Intermix feed Tank 8 (LT558)	m^3

---------- End Of Document ----------

FIRE SYSTEM SPECIFICATION

FIRE CONTROL SYSTEM AND INSTRUMENTATION DESIGN, SUPPLY AND INSTALLATION SPECIFICATION AND SCOPE OF WORKS

Document number	PL 913
Version number	2
Classification	Unclassified
Effective date	17 February 2026
Review date	1 July 2028

©Transnet SOC Ltd
Uncontrolled copy when printed

SUMMARY VERSION CONTROL

VERSION NO.	NATURE OF AMENDMENT	PAGE NO.	DATE REVISED
0	New Specification	ALL	1 July 2025
1	Comments during review between TPL and GreyJones included	ALL	11 July 2025

Note: Only latest amendments and/or additions are reflected in italics in the body of the document.

DOCUMENTATION SIGN-OFF SHEET

I, the undersigned hereby approve this procedure.

ROLE	CAPACITY/ FUNCTION	SIGNATURE	DATE
Compiled by:	**Pieter Jacobs**		
Approved by:	**Papa Moratwe**		

TABLE OF CONTENTS

1 Introduction 6

2 Acronyms 7

3 Definitions 8

4 Engineering Standards 9

4.1 Applicable Standards 9

4.2 Reference Standards 10

5 Control system AND INSTRUMENTATION SPECIFICATION 10

5.1 Fire Protection System Overview 10

5.2 Control System Architecture 11

5.3 Battery Limits 12

5.4 Control System Components 12

5.4.1 Controller 13

5.4.2 Main Operator Interface 15

5.4.3 Indicator Mimic (On the FCP) 17

5.4.4 Battery Back-up Power Supply 18

5.4.5 First Responder Operator Panels 19

5.4.6 Field Mounted Start Station (FMSS) 20

5.4.7 Fire Alarms Beacons and Sirens 20

5.4.8 Valves 21

5.4.9 Level Switch 21

5.4.10 Engine Control Panels 21

5.4.11 Jockey Pump Control Panel 22

5.5 Control System Operation 22

5.5.1 Main Operator Panel 22

5.5.2 First Responder Panel 24

5.5.3 AUTO / TEST Functionality 25

5.5.4 Pump Operation 25

5.5.5 System Condition Indication 27

©Transnet SOC Ltd

Uncontrolled copy when printed

5.5.6 Interlocking 28
5.5.7 Fault and Condition Monitoring 29
5.5.8 Local and Site Alarms 32
5.6 System Technical Requirements 34
5.6.1 System Design 34
5.6.2 Explosive Atmospheres 34
5.6.3 Battery Backup Power Supply 34
5.6.4 Panel Construction 35
5.6.5 Cabling, Racking and Trenching 37
5.6.6 Component Specifications 37
5.6.7 Installation Specification 40
5.7 System Layout 41
5.8 Quality Assurance 41
5.8.1 Quality Control Plan (QCP) 41
5.8.2 Design Review and Approval 41
5.8.3 Factory Acceptance Testing 43
5.8.4 Commissioning 43
5.9 Training 44
5.10 Design deliverables 45
5.11 Other Obligations of the *Contractor* 46
5.11.1 Erection Works 46
5.11.2 Transport of Material on Site 46
5.11.3 Tools for Erection Works 46

©Transnet SOC Ltd
Uncontrolled copy when printed

TECHNICAL SPECIFICATION - FIRE CONTROL SYSTEM AND INSTRUMENTATION DESIGN, SUPPLY AND INSTALLATION SPECIFICATION AND SCOPE OF WORKS

1 INTRODUCTION

The fire control system is for the protection of a fuel storage depot with various fuel handling areas which require fire protection.

This document defines the Works Information for the design, procurement, supply, manufacture, testing, delivery to site, installation, commissioning and handover documentation of a control system, instrumentation and associated equipment and materials such as cabling, trunking, instruments, and local and remote-control panels required to control the fire protection system.

Key components of the control system are:

- Fire Control Panel (FCP)
    - Controller
    - Main operator interface
    - Mimic display
- FCP battery backup power supply system
- First responder panel, located in the pump house
- Two repeater first responder panels, one in the operations control room and one in the security office
- Control valves (supplied by others)
- Field mounted start stations (FMSS)
- Tank level sensors
- Externally mounted visual and audible alarms at the control room, the security office and the pump house
- Interface to engine control panels (ECP's) (supplied by others)
- Interface to jockey pump control panel (JPCP) (supplied by others)
- Interface to the site process control system (existing)
- Provision for interface to the NOC (National Operating Centre)

©Transnet SOC Ltd
Uncontrolled copy when printed

2 ACRONYMS

The following acronyms apply when reading this specification;

AC	Alternating Current
AIA	Approved Inspection Authority
API	American Petroleum Institute
DB	Distribution Board
DC	Direct Current
ECM	Engine Control Module
ECP	Engine Control Panel
FAT	Factory Acceptance Test
FCP	Fire Control Panel: Stand-alone unit used to control the overall fire system including the starting of the ECP's
FIFO	First in first out
FMSS	Field mounted start station
IA	Independent Authority
I/O	Input Output
IP	Ingress Protection
JPCP	Jockey Pump Control Panel
LED	Light emitting diode
NEC	New Engineering Contract – Form of Contract applicable to this project
NFPA	National Fire Protection Association
NOC	TPL National Operating Centre
OEM	Original Equipment Manufacturer
P&ID	Process and Instrumentation Diagram
PLC	Programmable Logic Controller
QCP	Quality Control Plan
SANS	South African National Standard
SABS	South African Bureau of Standards
SLD	Single Line Diagram
TPL	Transnet Pipelines

©Transnet SOC Ltd
Uncontrolled copy when printed

3 DEFINITIONS

The following definitions shall apply when reading this specification;

Term	Definition
Cold Commissioning	Cold commissioning shall be witnessed by the *Employer* and shall include functional tests to confirm the control logic. Cold commissioning is conducted without product.
Command	The transmission of a signal to initiate an action.
Contractor	*Contractor* means the *Contractor* in terms of the NEC construction contract
Controller	The master relay based logic controller housed within the Fire Control Panel.
Employer	*Employer* means the *Employer* in terms of the *Contractors* NEC contract
Event	The transmission of a signal indicating an action has taken place.
Engine Control Module (ECM)	Deep Sea Electronics (DSE) module or approved equivalent fitted within the ECP and used to control the diesel engine
Engine Control Panel (ECP)	Control panel for starting, control and operation of each engine driven fire pump, incorporating an operator interface, gauges and alarms and the engine controller. Each pump-set will be fitted with a dedicated ECP interfaced to the FCP.
Field mounted start stations (FMSS)	These are push buttons located behind a break glass and are field mounted in locations where it is likely that there will be operators whenever a fire occurs in these areas.
Fire Control Panel (FCP)	Panel including the Controller, main operator interface and the indication mimic
First responders	For this document, first responders will be considered the personnel on site who are required to activate the protection system before evacuating.
First Responder Panel (FRP)	First responder interface with the Controller for activation and deactivation of scenarios with only one scenario permitted to be selected at a time.
Hot Commissioning	Hot commissioning shall be witnessed by the *Employer* and shall include operational tests to confirm system functionality and performance. Hot commissioning is conducted with product.
Main Operator Interface	Operator interface with the control system consisting of labelled buttons, indicator lights and other indicators which allow the activation and deactivation of individual protection systems with no limitations.
Jockey Pump Control Panel (JPCP)	Panel for the starting of the jockey pump. The JPCP is interfaced to the FCP.
Pre Commissioning	Pre-commissioning shall be performed and signed off by the *Contractor* prior to presentation of the system for cold commissioning. Pre-commissioning includes installation verification and deenergized testing.
Repeater First Responder Panel	A copy of the First Responder Panel, located in an alternate location to allow multiple operator control locations.
Scenario (Fire)	A scenario is a specific fire event, e.g. tank bund fire, for which fire protection system requirements can be predetermined.

©Transnet SOC Ltd
Uncontrolled copy when printed

Site Process Control System	Control system for the process control of the fuel handling; tanks, pumping, valves etc. Separate to the fire control system.
System	Part of the fire protection, dedicated to the protection of one area of the site and supplied with water or premix through a single pressure regulating deluge valve.

Note: words are capitalised when meeting these definitions

4 ENGINEERING STANDARDS

Although not bound in nor issued with this document, the following standardized specifications shall form part of the contract document:

4.1 Applicable Standards

SANS 10086-1	The installation, inspection and maintenance of equipment used in explosive atmospheres Part 1: Installations including surface installations on mines
SANS 10089-1	The petroleum industry - Part 1: Storage and distribution of petroleum products in above-ground bulk installations
SANS 10089-2	The petroleum industry - Part 2: Electrical and other installations in the distribution and marketing sector
SANS 10108	The classification of hazardous locations and the selection of equipment for use in such locations
SANS 10139	Code of practice for design, installation, commissioning and maintenance of fire detection and alarm systems in non-domestic premises
SANS 10142-1	The wiring of premises Part 1: Low-voltage installations
SANS 50054-3	Fire detection and fire alarm systems - Part 3: Fire alarm devices - Sounders
SANS 50054-4	Fire detection and fire alarm systems - Part 4: Power supply equipment
SANS 50054-11	Fire detection and fire alarm systems - Part 11: Manual call points
SANS 60079-14	Explosive atmospheres - Part 14: Electrical installations design, selection and erection

©Transnet SOC Ltd
Uncontrolled copy when printed

4.2 Reference Standards

PL 100	Drawing Standards
PL 101	Plant & Equipment Tag Numbering Standards
PL 102	Equipment, Instrument & Electrical Symbology Standards
PL 103	General Drawing Standards
PL 631	Specification for Low Voltage Switchgear & Distribution Boards
PL 711	Specification for Equipment Cabinets to House Electronic Equipment
PL 727	Specification for Cable, Racking, Trenching & Earthing Reticulation Codes of Practice
PL 901	Fire Pump Specification
PL 908	Jockey Pump-set Specification
PL 916	ECP FCP control narrative
PL 917	Equipment Handover and Document Procedure (EHDP)
TPL-TECH-F-STD-001	Transnet Pipelines Technical Fire Protection Design Standard
TECH-DO-WI-001	Handover of As-built & other Docs
TECH-SOP-00x	Shutdown Readiness
XPS/1015/13013	Hazardous area classification guidelines report for Transnet Pipelines (TPL) infrastructure

5 CONTROL SYSTEM AND INSTRUMENT SPECIFICATION

5.1 Fire Protection System Overview

The fire protection system includes a new pump house, water and diesel storage tanks outside the pump house, foam concentrate storage, water and foam pumping and foam proportioning facilities inside the pump house, and numerous Systems for the application of water or foam premix to fire zones.

There are two diesel engine pump sets (duty and standby), each with an ECP, diesel engine, water pump and foam concentrate pump. Pressure will be maintained in the water system by a jockey pump when not in use. The duty or standby diesel engine fire water pumps will be activated in the event of a fire.

The water discharge from the supply system feeds water hydrants, water valve headers and foam premix valve headers. There are take offs from the headers to the protection Systems; these have solenoid actuated pressure regulating deluge valves which are controlled by the Controller.

There is an electrically actuated expanding plug valve on the foam concentrate feed line to the premix system in the pump house.

©Transnet SOC Ltd
Uncontrolled copy when printed

There are solenoid actuated pressure regulating deluge master valves in the tank top pourer headers.

Further detail is provided in the P&ID's in the Works Information.

5.2 Control System Architecture

The principle of the fire protection system control is to have a centralised Controller managing all logic and control functions.

The fire protection control system shall be based on hardwired relay logic only, the use of PLC's will not be accepted.

The Controller will receive command inputs from the main operator interface, the main and repeater first responder panels and field mounted start stations (FMSS) if applicable and shall have provision to receive command inputs from the NOC.

The Controller will receive event signals for indication, alarming and control from the ECPs, the jockey pump control panel, the battery backup power supply system, the FMSS, the electrically actuated foam concentrate valve and from the level sensors on the water and diesel storage tanks.

The Controller will provide command signals or outputs for activation and control of the various valves within the system.

The Controller will provide command signals to start and stop the ECP's as determined by the pump start sequence logic described later in this document.

The Controller will provide event signals for indication of the system condition to the site's process control system and shall have provision for the future output of all event signals to the NOC.

The Controller will control the sirens and beacons.

The operator interface points are the main operator interface on the FCP, the three first responder panels, the FMSS's and the NOC. Operators can also override the individual engines from the respective ECP's.

The site-specific control system architecture is indicated on the EC&I Scope of Work Block Diagram included in the Works Information.

©Transnet SOC Ltd
Uncontrolled copy when printed

5.3 Battery Limits

The following items are included in the scope of *works* for this document:

- Fire control panel (FCP), including Controller, main operator interface and mimic display
- FCP Battery backup power supply system
- First responder panels
- Field mounted start stations (FMSS) (if applicable)
- Tank level sensors
- Externally mounted visual and audible alarms
- Interface to engine control panels (ECP's)
- Interface to jockey pump control panel (JPCP)
- Interface to the site process control system

The following items are excluded from the scope of *works* for this document and will be provided for elsewhere:

- Control valves
- Engine control panels (ECP's)
- Jockey pump control panel (JPCP)
- Modification to, and terminations within, the site process control system
- Cable sleeves within the pump house
- Cable sleeves and draw boxes around the site

5.4 Control System Components

The fire control system shall comprise the following components:

1) FCP, including
    - Controller
    - Main operator interface
    - Indicator mimic
2) Battery backup power supply (dual redundant).
3) First responder panel in the pump house
4) First responder repeater panels in operations control room and in the security office
5) FMSS (if applicable)
6) Fire alarm siren and beacons outside the pump house
7) Fire alarm sirens at valve banks

©Transnet SOC Ltd
Uncontrolled copy when printed

8) Field equipment, including level switches for water and diesel tanks

9) Interface with site process operating system

10) Interface with NOC

Proposed layouts of the main panel and the first responder panels operator interfaces control system architecture is indicated on the EC&I Scope of Work Block Diagram included in the Works Information.

The site-specific main operator interface, first responder operator interface and mimic panel layouts are included in the Works Information.

The site-specific control system layout and proposed electrical and instrumentation cable routes are included in the Works Information.

Each of the control system elements are described in detail below.

5.4.1 Controller

The Controller incorporates the relay and wiring arrangement which facilitates the logic operations of the control system and processes the command inputs and outputs.

The Controller shall interface with the main operator panel, the first responder panels, the FMSS's, the ECP's, jockey pump control panel, the NOC and the process control system, and shall facilitate all logic operations including the activation and interlocking of multiple Systems in line with the cause-and-effect matrix.

The Controller, the main operator interface and the indicator mimic from the FCP shall be located in the pump house, along with a first responder panel which must be separate from the FCP.

5.4.1.1 NOC Interface

The Controller shall have provision for interfacing with the NOC system. This provision shall include:

- 600mm x 400mm free space the full depth of the panel for the installation of the future signal interface system
- Terminal connection points for input and output signals
- Sufficient trunking for wiring between the free space and the terminals.

NOC interfaces shall be via potential free contacts in the FCP. It shall be possible to activate and deactivate all Scenarios from the NOC, overriding first responder panel activations but not main operator panel activations.

The Controller shall be provided with terminals for future connection to the NOC are as follows:

- Input from NOC for the starting of all Scenarios. These shall be interlocked so that only one Scenario can be activated at a time.
- Input from NOC to reset all Scenario activations initiated from the first responder panels or the NOC. This input shall also cause the top pourer master valve to close.

- Input from NOC for the control of the top pourer master valves
    - Open
- Output to NOC to indicate all Scenario activations and system conditions.
    - Which Scenarios are activated
    - Status of foam valve
    - Status of top pourer master valve
- Output to NOC to indicate which panel is the current system master:
    - MAIN PANEL ACTIVE
    - NOC ACTIVE
    - FIRST RESPONDER PANEL # ACTIVE (a signal for each panel)
- Output to NOC to indicate all conditions reported on the main operator interface including:
    - POWER SUPPLY FAULT
    - CIRCUIT BREAKER FAULT
    - WATER TANK 1 LOW
    - WATER TANK 1 LOW LOW
    - WATER TANK 2 LOW
    - WATER TANK 2 LOW LOW
    - DIESEL TANK 1 LOW
    - DIESEL TANK 1 LOW LOW
    - DIESEL TANK 2 LOW
    - DIESEL TANK 2 LOW LOW
    - JOCKEY PUMP RUNNING
    - JOCKEY PUMP FAILURE
    - JOCKEY PUMP ALARM
    - FIRE PUMP 1 RUNNING
    - FIRE PUMP 1 POWER FAILURE
    - FIRE PUMP 1 FAIL
    - FIRE PUMP 2 RUNNING
    - FIRE PUMP 2 POWER FAILURE
    - FIRE PUMP 2 FAIL

©Transnet SOC Ltd
Uncontrolled copy when printed

5.4.1.2 Process Control System Interface

The Controller shall provide the following indications to the site process control system:

- Alarm signal:
  - To be provided in all cases where a Scenario or System is activated or other fire alarm signal is generated such as by direct starting of fire engine while FCP is in Auto mode.
  - Activation of any one of the FMSS's
- Water storage alarm:
  - Activated whenever water level is below Low set point
- Diesel storage alarm:
  - Activated whenever diesel level is below Low set point
- Fault condition: activated if any of the following faults occur:
  - Engine 1 Fail
  - Engine 1 Power Failure
  - Engine 2 Fail
  - Engine 2 Power Failure
  - Jockey Pump Fail
  - FCP Power Supply 1 Failure
  - FCP Power Supply 2 Failure

5.4.2 Main Operator Interface

The main operator interface on the FCP is only for use by suitably trained, authorised site personnel.

The main operator interface allows activation and deactivation of each protection System, without any interlocking, and thus full manipulation of the fire protection system.

The main operator interface also includes functions to facilitate maintenance of the fire protection system.

The following control and indication devices will be included on the main operator panel:

- MAIN PANEL ACTIVE indication (GREEN)
- NOC ACTIVE indication (GREEN)
- FIRST RESPONDER PANEL # ACTIVE (GREEN) (one indicator for each panel) to indicate which first responder panel initiated an activation.
- System OPEN illuminated push buttons (GREEN) to open the valves for the supply to each fire protection System.

©Transnet SOC Ltd
Uncontrolled copy when printed

- System CLOSE push buttons (RED) to close the valves for the supply to each fire protection System. These CLOSE push buttons shall be located below the above-mentioned OPEN push buttons.
- TOP POURER MASTER VALVE OPEN illuminated push button (GREEN), with transparent flip cover, to open all top pourer master valves and to indicate when the valves are opened from the main panel. One button for all top pourer master valves.
- TOP POURER MASTER VALVE CLOSE push button (RED) to close all top pourer master valves. One button for all top pourer master valves.
- FMSS ACTIVATED indication (GREEN); one lamp per zone not per FMSS (if applicable).
- MASTER RESET push button to clear all selections, cease and reset the FCP starting mechanism and close all valves; whether made from main operator panel or not. The engines shall not be stopped by this button.
- BUZZER
- ALARM ACKNOWLEDGE push button to silence the panel buzzer as well as stop the annunciation system but shall not override any activated Systems, Scenarios or plant.
- BUZZER ACKNOWLEDGE push button to silence the panel buzzer only.
- Voltmeter to indicate battery backup power supply output voltage.
- Ammeter to indicate battery backup power supply output current.
- POWER SUPPLY FAULT indication (RED)
- CIRCUIT BREAKER FAULT indication (RED)
- WATER TANK 1 LOW indication (AMBER)
- WATER TANK 1 LOW LOW indication (RED)
- WATER TANK 2 LOW indication (AMBER)
- WATER TANK 2 LOW LOW indication (RED)
- DIESEL TANK 1 LOW indication (AMBER)
- DIESEL TANK 1 LOW LOW indication (RED)
- DIESEL TANK 2 LOW indication (AMBER)
- DIESEL TANK 2 LOW LOW indication (RED)
- JOCKEY PUMP RUNNING indication (GREEN)
- JOCKEY PUMP FAILURE indication (RED)
- JOCKEY PUMP ALARM indication (AMBER)
- PUMP START push button.
- FIRE PUMP 1 RUNNING indication (GREEN)
- FIRE PUMP 1 POWER FAILURE indication (RED)
- FIRE PUMP 1 FAIL indication (RED)
- FIRE PUMP 2 RUNNING indication (GREEN)
- FIRE PUMP 2 POWER FAILURE indication (RED)

©Transnet SOC Ltd
Uncontrolled copy when printed

- FIRE PUMP 2 FAIL indication (RED)
- AUTO / TEST key selector switch.
- AUTO mode active indication (GREEN)
- TEST mode active indication (RED)
- FOAM VALVE OPEN indication (GREEN)
- FOAM VALVE CLOSED indication (RED)
- TOP POURER MASTER VALVE OPEN indication (GREEN) to indicate when the valves are opened from the main panel, the NOC or a first responder panel. One lamp for all top pourer master valves.
- TOP POURER MASTER VALVE CLOSED indication (RED). One lamp for all top pourer master valves.
- MIMIC LAMP TEST push button.
- LAMP TEST push button.

5.4.3 Indicator Mimic (On the FCP)

A mimic diagram of the site shall be located on the FCP to assist the operator in identifying protection equipment which needs to be or is active during an event. The mimic shall consist of a stainless-steel face with coloured, etched lines and labels to represent the layout of the site. LED indicator lamps shall be placed on the layout and labelled to indicate the status of the control panels (main operator and first responder) and fire protection Systems.

The indicator lamps on the mimic shall only illuminate once the final relay in sequence to operate the control valve represented has operated, to indicate that barring failure of the wiring to the valve or the valve itself, the System is in operation.

The mimic shall display the following:

- Which operator panel initiated the current state of activation (GREEN LED)
- Which fire protection Systems are active (RED LED)
- Location of hydrants on the site (Etched)
- Location of feed/ring main isolation valves on the site (Etched)
- Location of valve banks with indication of which zones are supplied from the valve bank. (Etched)
- Location of the operator panels. (Etched, with indicator LED at location)
- Site roads (Etched)
- Bund areas (Etched)
- Buildings (Etched)

©Transnet SOC Ltd
Uncontrolled copy when printed

5.4.4 Battery Back-up Power Supply

The FCP shall be provided with dual battery back-up power supply systems. Each battery backup power supply system shall be sized to charge the batteries and provide sufficient power to maintain full operability of the FCP, whilst meeting the requirements of the specification.

Each battery back-up power supply shall be sized to provide battery power for the operation of the FCP for at least 15 minutes in the event of the essential power failing.

The battery back-up power supply systems shall be designed to maintain optimum battery voltage.

The battery back-up power supply systems shall be designed to provide continuous power to the FCP even in the event of the batteries having been discharged.

The battery back power supply systems shall be linked to supply the FCP in such a manner that if either is unavailable, the other will supply the full requirements of the FCP and that one system cannot adversely affect the other through interference or drawing power.

The battery back-up power supply shall be a Blue Ginger or approved equivalent and shall have the following provisions:

- Surge protection on the input to each power supply.
- Automatic bypass of the batteries in the event that a battery fails or is removed, with sufficient power to operate the FCP.
- Meters on the supply side to each charger to indicate:
    - AC Supply voltage
    - AC Supply current
- Maters on each charger output to indicate:
    - DC Charger voltage
    - DC Charger current

Each battery system shall be housed in a single cabinet with charger, controls and batteries in the same cabinet.

The cabinets and entire installation shall be IP66 rated and suitable for installation in a sprinkler-protected room.

©Transnet SOC Ltd
Uncontrolled copy when printed

5.4.5 First Responder Operator Panels

The first responder operator panels are for use by first responders. There will be first responder panels in the pump house, the main control room and the main security office.

These panels have buttons for fire Scenarios rather than for specific Systems. Each Scenario will automatically activate predefined Systems. The cause-and-effect matrix defines the Systems to be activated for each Scenario considered. This allows effective firefighting while only requiring the first responder to identify the location of the fire such that they do not need to make any detailed decisions regarding how to address the fire.

These panels will have provision to activate the top pourer master valve related to an identified Scenario. The Scenario will automatically activate the relevant control valve for the top pourer system, but the pourer master valve will remain closed until specifically activated by the first responder. This is to prevent incorrect tank top pourer discharge.

The following control and indication devices will be included in the first responder panels:

- MAIN PANEL ACTIVE indication (GREEN)
- NOC ACTIVE indication (GREEN)
- FIRST RESPONDER PANEL # ACTIVE (GREEN) (one indicator for each panel) to indicate which first responder panel initiated an activation.
- Scenario selection illuminated push buttons (GREEN) to activate predefined Systems. Scenario indication shall be indicated on all first responder panels, regardless of which panel activated the Scenario.
- TOP POURER MASTER VALVE OPEN illuminated push button (GREEN), with transparent flip cover, to open all top pourer master valves and to indicate when the valves are opened from the main panel. One button for all top pourer master valves.
- SCENARIO RESET push button, which will de-activate the currently operating Scenario selected on this operator panel and cause the top pourer master valve to close.
- FIRE PUMP 1 RUNNING indication (GREEN)
- FIRE PUMP 1 POWER FAILURE indication (RED)
- FIRE PUMP 1 FAIL indication (RED)
- FIRE PUMP 2 RUNNING indication (GREEN)
- FIRE PUMP 2 POWER FAILURE indication (RED)
- FIRE PUMP 2 FAIL indication (RED)
- BUZZER
- BUZZER ACKNOWLEDGE push button to silence the panel buzzer only.
- LAMP TEST push button.

©Transnet SOC Ltd
Uncontrolled copy when printed

5.4.6 Field Mounted Start Station (FMSS)

Field mounted start stations (FMSS's) are only required on sites where tanker loading facilities are provided. The *Contractor* shall refer to the P&ID's to determine if FMSS's are required for this site.

FMSS's will be provided at both ends of each tanker loading bay. These shall be connected such that the switch is closed to activate.

The FMSS's shall activate the corresponding System.

FMSS specification:

- Break-glass, latching switch
- Normally open contact such that failure of the switch or wiring will not cause activation.
- Locally resettable
- Red enclosure
- Explosion protection certification for use in Zone 1 hazardous area, supplied with an IA certificate

The scope of *works* includes all aspects relating to the installation of the FMSSs, including the supply and installation of a mounting base and stand, cabling and cable racking.

The FMSS's shall be mounted in accordance with the standard drawing included in the Works Information.

5.4.7 Fire Alarms Beacons and Sirens

On the activation of the protection system, an alarm siren will sound and be accompanied by a fire alarm beacon.

A fire alarm siren, a red beacon and an orange beacon shall be installed outside the pump house.

Fire alarm sirens shall be installed at all valve banks.

The supply and installation of these visual and audible alarms is included in this scope of *works*.

These sirens shall be adequately sized to provide an audible warning to the entire site as required by SANS 10089-1 and shall comply with SANS 50054-3.

Each operator panel shall also have a buzzer which shall give local indication of fire alarms and condition alarms.

Sirens and beacons shall be suitable for extended exposure to the environment and a minimum service life of 15 years.

5.4.8 Valves

The System control valves, the top pourer master valves and the premix feed deluge valve will be hydraulic pilot deluge valves with solenoid activation. The valves will be fail safe closed, energise to open.

The foam concentrate isolation valve will be an electric motorised expanding plug valve with a quarter turn actuator. The actuator shall be supplied from the essential electrical supply. The actuator shall provide feedback to the FCP. This valve is actuated to open when a Scenario or foam System is activated in Auto mode. The valve open/close command shall be maintained until the valve position feedback indicates that the valve is open/closed. If the power is interrupted, the valve will continue to receive an open/close command which will resume operation once power is restored, unless the system has subsequently been reset. Manual operation of the valve will be possible and will not interfere with feedback functionality.

5.4.9 Level Switch

The level switches for the water and diesel storage tanks form part of this scope of *works*. The switches shall provide signals to indicate low and low-low levels.

The *Contractor* shall procure, supply, delivery, install, connect, set and commission the level switches.

The *Contractor* shall consider the tank design and shall interface with the tank manufacturers to ensure that the switches can be suitably mounted.

5.4.10 Engine Control Panels

There will be two fire pump sets, one assigned as duty, and one assigned as standby. The supply and installation of the ECP's will be by others as part of the pump set supply scope.

Each pump set will comprise of a diesel engine, a water pump, a foam pump and an ECP. There shall be interconnection between the ECP's and the FCP in order to allow the pumps to be started from the FCP as well as for the reporting of the pump status from the ECP's to the FCP.

©Transnet SOC Ltd
Uncontrolled copy when printed

5.4.11 Jockey Pump Control Panel

The supply and installation of the jockey pump control panel will be by others as part of the jockey pump-set supply scope.

The jockey pump will have a dedicated control panel. There shall be interconnection between the jockey pump control panel and the FCP for the reporting of the pump status.

5.5 Control System Operation

The *Contractor* shall develop cause and effect matrices based on the control system operation described in this section. Preliminary cause and effect matrices are included in the Works Information.

5.5.1 Main Operator Panel

5.5.1.1 System Open

Activation of any System Open button on the main operator interface shall cause the selected System control valve to open. This shall also initiate the start of the main fire pumps, if they are not already running, and the manipulation of the supply system valves as required for the selected System.

The fire pump start control sequence must be started only if one of the pumps is not already running or if an 'Engine Failure' event does not already exist for both pumps.

The foam concentrate isolation valve is only opened if the FCP is in Auto mode.

5.5.1.2 System Close

Activation of any System Close button on the main operator interface shall only cause the selected System control valve to be closed.

5.5.1.3 Top Pourer Master Valve Open

Activation of the Top Pourer Master Valve Open button on the main operator interface shall cause all top pourer master valves to be opened.

5.5.1.4 Top Pourer Master Valve Close

Activation of the Top Pourer Master Valve Close button on the main operator interface shall cause all top pourer master valves to be closed.

5.5.1.5 Master Reset

Activation of the Master Reset button shall cause all valves to return to their normal state; the foam concentrate isolation valve, the premix system deluge valve, all top pourer master valves and any open system valves must be closed.

This shall also return the Controller to a state where any panel can cause the next activation.

This shall reset the engine start sequence in the FCP such that in a healthy system, the next start attempt would be made on the duty ECP.

Activation of both the Alarm Acknowledge and the Master Reset shall be required to switch off the exterior fire alarm beacon.

5.5.1.6 Alarm Acknowledge

Activation of the Alarm Acknowledge button shall cause the local buzzer alarms at all panels and all external sirens to be switched off.

In addition, activation of this button shall cause all condition alarms to be reset; this button should therefore be used after maintenance or repair to clear the condition alarms.

The alarm shall only be cleared if the source of the alarm is no longer present; it may be momentarily removed while the button is pressed, but it shall be reinstated if the alarm signal is still present.

Activation of both the Alarm Reset and the Master Reset shall be required to switch off the exterior fire alarm beacon.

5.5.1.7 Buzzer Acknowledge

Activation of the Buzzer Acknowledge button shall cause all buzzer alarms on the main operator panel and first responder panels to be silenced.

5.5.1.8 Auto / Test Switch

This is a key switch to change the FCP between Auto and Test modes.

5.5.1.9 Lamp Test and Mimic Lamp Test

Activation of the Lamp Test button shall cause power to be provided to all indicator lamps on the main operator interface; whether incorporated into a pushbutton or separate lamps. This is to check the condition of the lamps to ensure that if they receive a signal they will illuminate.

©Transnet SOC Ltd
Uncontrolled copy when printed

Activation of the Mimic Lamp Test button shall cause power to be provided to all indicator lamps on the mimic. This is to check the condition of the lamps to ensure that if they receive a signal they will illuminate.

5.5.1.10 Pump Start

Activation of the pump start button shall initiate the FCP controlled pump start sequence of the duty and standby pumps.

5.5.2 First Responder Panel

Scenarios may only be activated if they have not been locked out by the Controller.

This means that either the system has not been activated, or the system was activated from that first responder panel and the system has not been overridden from the NOC or the main operator interface.

5.5.2.1 Scenario Activation Button

Activation of any Scenario button on any operational first responder panel or the NOC shall cause the Controller to open the appropriate System control valves to address that Scenario as defined in the cause and effect matrices.

This activation shall also initiate the start of the fire pumps, if they are not already running, and the actuation of the premix supply deluge and concentrate isolation valves as required for the selected Scenario.

The fire pump start control sequence must be started only if one of the pumps is not already running or if an ‘Engine Failure’ event does not already exist for both pumps.

The foam concentrate isolation valve is only opened if the FCP is in Auto mode.

5.5.2.2 Top Pourer Master Valve Open

Activation of the Top Pourer Master Valve Open button on any operational first responder panel or the NOC shall cause all top pourer master valves to be opened.

5.5.2.3 Scenario Reset

Activation of the Scenario Reset button on any operational first responder panel or the NOC shall cause all System valves and all supply system valves, including the top pourer master valves to be closed.

This shall also return the Controller to a state where any panel can cause the next activation.

©Transnet SOC Ltd
Uncontrolled copy when printed

5.5.2.4 Buzzer Acknowledge

Activation of the Buzzer Acknowledge button on any first responder panel, or the NOC shall only cause the local buzzer alarm to be silenced.

5.5.2.5 Lamp Test

Activation of the Lamp Test button shall cause power to be provided to all indicator lamps on the local first responder panel; whether incorporated into a pushbutton or separate lamps. This is to check the condition of the lamps to ensure that if they receive a signal they will illuminate.

5.5.3 AUTO / TEST Functionality

AUTO or *TEST* modes are activated through the *AUTO/TEST* selector key switch located on the main operator interface. The operating mode, *AUTO* or *TEST*, shall be indicated on the main operator interface by a LED indicator lamp and on the NOC system, and transmitted to the ECPs.

The *AUTO* mode shall be the standard mode which the Controller shall remain in unless otherwise required. This mode allows full functionality of all panels, all interlocking, operation of all valves and thus the protection of the site as designed.

The *TEST* function is provided for maintenance and testing activities. This function inhibits the opening of the foam concentrate isolation valve so that no matter what activations are made; the valve remains closed. This allows for the foam premix System to be tested without the introduction of foam into the system.

In *TEST* mode, the ECP's shall be switched to a safe operating mode in which the ECP's will monitor the engine operating conditions and safely shut down the engine in the event of the operating conditions posing a risk to the pump or engine. In *AUTO* mode, the ECP's shall inhibit engine protection functions such that the engines will "run to destruction".

In *TEST* mode, the Controller shall prevent the transmission of a fire alarm signal to the site process control system

5.5.4 Pump Operation

The Controller shall incorporate pump start control logic to control the starting sequence of the fire pumps in the event of an activation from the main operator interface, the NOC or one of the first responder panels.

©Transnet SOC Ltd
Uncontrolled copy when printed

The pump start control logic shall also be relay based and may employ timers and counters as required, however, a PLC may not be used. The signals between the FCP and ECP shall be in the form of potential free contacts in the originating panel.

The pump starting sequence shall be designed and constructed as per the requirements defined in the ECP and FCP Control Narrative, document PL 916.

The Controller will provide the following event signals to each ECP:

- AUTO / TEST command signal.
    - A signal shall be provided by the controller to enable the ECP to switch between Auto and Test modes. This shall be configured by the ECP to disable protections in the engine control module (ECM) when the FCP is in Auto. The Auto signal shall cause the ECP/ECM to run without engine monitoring protection such that the engine will 'run to destruction'.
    - The command signal shall be configured such that if it is lost, the ECP will revert to operate with protection.
- START command signal
    - A signal shall be provided to initiate the start of the engine through the ECM. This signal shall be maintained for sufficient time to ensure that the signal is received and processed.
    - The start signal may only be provided if one of the pumps is not already running, and if both pumps have not reported failure to the FCP
    - The start signal shall be given multiple times and shall alternate between the duty and standby pump until a pump starts, or other parameters are met.
    - The ECM shall latch and continue to attempt to start the engine even after the start command signal generated by the controller is withdrawn so that there is no need to provide a continuous signal to the ECP. A stop signal shall be provided by the controller to terminate the start attempt when necessary.
- STOP command signal
    - The controller shall provide a stop signal to the ECP's to terminate the start sequence attempt when required.
- FAIL TO START signal
    - The controller will generate a 'Fail to Start' command and transmit the command to the respective ECP/ECM if the sixth count is reached by the controller counting mechanism.

©Transnet SOC Ltd
Uncontrolled copy when printed

The controller shall receive the following event signals from each ECP:

- Run
- Engine Failure
- Power Supply Fault (Engine # Power Fail)
- Normal Termination

If the FCP starting sequence has been initiated, has not been reset and has not been stopped by the mechanisms described in the ECP and FCP Control Narrative, and all Systems have been deactivated but the Master Reset button has not been activated, the FCP starting sequence shall resume and ensure that at least one engine is running.

In addition to the FCP starting sequence reset mechanisms described in the ECP and FCP Control Narrative, the FCP starting sequence can only be reset at the FCP by the Master Reset activation on the main operator interface. Resetting of the starting sequence will mean that the next start command will be provided to the duty pump set.

There shall be no provision to stop the operation of the fire pumps from the main operator interface, or any other operator interface except the respective ECP's.

5.5.5 System Condition Indication

The system shall be fully integrated such that all operator panels will indicate the state of the fire system at any stage. To facilitate this the following is required:

- If a Scenario is activated on any of the first responder panels or NOC, all first responder panels, the NOC and the main operator interface shall indicate the Scenario / Systems activated.

- If Systems are activated from the main operator panel or the Systems activated by a first responder panel activation are manipulated from the main operator panel, all first responder panels and the NOC shall indicate *MAIN PANEL ACTIVE* and Scenario activation indication shall not be indicated. Scenarios shall only be indicated to be operational on the first responder panels or NOC if the full Scenario is active.

- If a Scenario is activated from any of the first responder panels, all first responder panels, the main panel and NOC shall indicate *FIRST RESPONDER PANEL # ACTIVE*, to indicate which first responder panel was used to activate the Scenario.

- If a Scenario is activated from the NOC, all first responder panels, the main panel and NOC shall indicate *NOC ACTIVE*, to indicate that the NOC is the current system master.

©Transnet SOC Ltd
Uncontrolled copy when printed

5.5.6 Interlocking

5.5.6.1 Main Operator Panel

- There shall be nothing to limit the activation of multiple fire protection Systems from the main operator interface.
- Simultaneous start-up and running of both duty and standby pumps shall not be permitted.
- If a Scenario is activated from a first responder panel or the NOC:
  - It shall be possible for additional Systems to be selected on the main operator interface without limitation. This will result in the *MAIN PANEL ACTIVE* indication on all first responder panels and the NOC, and block all further inputs from the first responder panels and the NOC.
  - It shall be possible for Systems, selected through a first responder panel or NOC input, to be deactivated from the main operator panel without resetting the whole Scenario. For example, if Zone 1 Bund Fire is activated on a first responder panel, the bund pourers for Zone 1 along with the top pourer for Zone 1 will show as activated on the main operator panel. It shall then be possible for the bund pourers or top pourer to be deactivated without affecting the other operating System(s). This will result in the *MAIN PANEL ACTIVE* indication on all first responder panels and the NOC, and block all further inputs from the first responder panels and the NOC.

5.5.6.2 First Responder Panels

- Only one Scenario may be activated at any time; all other Scenarios shall be inhibited.
- If a Scenario is activated on any of the panels no further input shall be processed from any of the other first responder panels.
- Consequently, only one Scenario may be selected from any of the first responder panels at any time.
- The *SCENARIO RESET* input shall only be effective if received from the first responder panel which generated the initial selection. This is so that one operator cannot remotely override another operator with the same authority. A *SCENARIO RESET* shall clear the *FIRST RESPONDER PANEL # ACTIVE* and the Scenario selection lamps.

©Transnet SOC Ltd
Uncontrolled copy when printed

5.5.6.3 NOC

- Only one Scenario may be activated at any time.
- Inputs from the NOC shall override any selections from the first responder panels.
- Inputs from the NOC shall not override any selections from the main operator panel.
- Further inputs from the first responder panels shall not override activations from the NOC

5.5.7 Fault and Condition Monitoring

The Controller shall monitor various inputs and generate condition outputs based either on rules in the Controller or directly based on input signals.

5.5.7.1 Water Tank Levels

- Each water tank shall have a level switch with two switching points.
- The first switching point shall be a Low-level alarm to indicate the level is below the level required for 60 minutes firefighting (90% tank level).
- The second switching point shall be a Low-Low level alarm to indicate the level is below the level required for 20 minutes firefighting (30% tank level).
- Low and Low-Low level alarms shall be reported by the Controller.
    - There are Low and Low-Low indicator lamps for each water tank on the main operator interface.
    - There shall be provision to transmit these conditions to the NOC.
    - These conditions shall cause a general condition alarm signal to be transmitted to the site process control system.
    - The main panel buzzer shall be activated.

©Transnet SOC Ltd
Uncontrolled copy when printed

5.5.7.2 Diesel Tank Levels

- Each diesel tank shall have a level switch with two switching points.
- The first switching point shall be a Low level alarm to indicate the level is below the level required for 66 minutes firefighting (44% tank level).
- The second switching point shall be a Low-Low level alarm to indicate the level is below the level required for 20 minutes firefighting (13% tank level).
- Low and Low-Low level alarms shall be reported by the Controller.
    - There are Low and Low-Low indicator lamps for each diesel tank on the main operator interface.
    - There shall be provision to transmit these conditions to the NOC.
    - These conditions shall cause a general condition alarm signal to be transmitted to the site process control system.
    - The main panel buzzer shall be activated.

5.5.7.3 Fire Control System Power Supply Condition

- Each battery backup power supply for the FCP shall have a mechanism to report any fault to the FCP as a power supply fault signal.
    - There shall be a Power Supply Fault indicator lamp for the FCP power supply, on the main operator interface, activated by the power supply fault signal.
    - There shall be provision to transmit this signal to the NOC.
    - This signal shall cause a general condition alarm signal to be transmitted to the site process control system.
    - The main panel buzzer shall be activated
- All circuit breakers and fuses in the FCP shall be monitored and a fault with any of them shall generate a fault signal.
    - There shall be a Circuit Breaker Fault indicator lamp on the main operator interface, activated by this signal.

©Transnet SOC Ltd
Uncontrolled copy when printed

- There shall be provision to transmit this condition signal to the NOC.
- This condition signal shall cause a general condition alarm signal to be transmitted to the site process control system.
- The main panel buzzer shall be activated

5.5.7.4 Jockey Pump Condition

- The signals between the FCP and jockey pump panel shall be in the form of potential free contacts in the originating panel.
- The FCP shall be provided with a Run signal and a Fail signal from the jockey pump panel.
- The FCP Controller shall report three conditions based on the two signals:
  - Run, which shall be directly activated by the run signal from the jockey pump panel.
  - Run Alarm, which shall be activated if:
    - The jockey pump runs for more than consecutive 5 minutes in any 60-minute period.
    - The jockey pump starts more than 10 times in any 60-minute period.
  - Fail, which shall be directly activated by a signal from the jockey pump panel.
- There shall be an indicator lamps for each of these conditions on the main operator interface.
- There shall be provision to transmit these conditions to the NOC.
- The Run Alarm and Fail condition signals shall cause a general condition alarm signal to be transmitted to the site process control system.
- The main panel buzzer shall be activated for the Run Alarm and Fail conditions.

5.5.7.5 Fire Pump Condition

- The Controller shall be provided with three condition monitoring signals from each ECP: a pump Run signal, a Power Failure signal and an Engine Fail signal.
- There shall be an indicator lamp for each of these conditions, for each pump, on the main operator interface and each first responder panel.

©Transnet SOC Ltd
Uncontrolled copy when printed

- There shall be provision to transmit all the condition signals to the NOC.
- The fault and fail condition signals shall cause a general condition alarm signal to be transmitted to the site process control system.
- The main panel buzzer shall be activated for the Power Failure and Pump Fail condition alarms.

5.5.7.6 Foam Valve Condition

- The Controller shall receive open and closed inputs from the actuator on the foam concentrate valve.
- There shall be an indicator lamp for open or closed condition on the main operator interface activated by the Controller.
- There shall be provision to transmit both the condition signals to the NOC.

5.5.7.7 Top Pourer Master Valve Condition

- The Controller shall indicate on the main operator interface whether the top pourer master valve is open or closed.
- This shall be indicated by indicator lamps separate to the illuminated push buttons on the panel
- Provision shall also be made for the transmission of the signal indicating the state of the valves to the NOC.

5.5.8 Local and Site Alarms

The FCP shall include alarms for warning of a system activation throughout the site as well as for warning of conditions monitored and identified by the Controller.

The main alarm shall be indicated through a red beacon and siren installed outside the pump house, as well as through the LED indicators and the buzzers on the main operator panel and the first responder panels. These conditions shall also be reported to the site process control system and the NOC.

The main alarm shall be activated when a fire Scenario, System or FMSS is activated or when a fire pump is running. The main alarm shall be active in both auto and test mode such that the alarm is tested during the weekly tests.

The system condition warning alarms shall be indicated through an orange beacon installed outside the pump house as well as through the relevant LED indicators on the operator panels and an audible alarm

©Transnet SOC Ltd
Uncontrolled copy when printed

from the panel buzzers in each operator panel. These conditions shall also be reported to the site process control system and the NOC.

System condition alarms will be activated in the following events:

- Foam valve open
- FCP power supply fault
- Circuit breaker tripped (any circuit breaker in the Controller)
- Fire pump power failure
- Fire pump failure
- Jockey pump failure (P183)
- Jockey pump Run Alarm
- Water tank, Low level
- Water tank, Low-Low level
- Diesel tank, Low
- Diesel tank, Low-Low level
- Activation of FMSS

The *ALARM ACKNOWLEDGE* button on the main panel will silence the main alarm and all panel buzzers.

The *BUZZER ACKNOWLEDGE* button on each panel will silence the local alarm (panel buzzer).

©Transnet SOC Ltd
Uncontrolled copy when printed

5.6 System Technical Requirements

5.6.1 System Design

The system shall be designed and constructed as a relay based controller. All functions / aspects of control shall be performed by individual relays, separately mounted in the control panel.

The design shall comply with the requirements of SANS 10139 and SANS 50054 except where changed by requirements stated in this document or other project specific documentation.

The *Contractor* shall ensure that the cable selection considers all factors including the voltage drop, current carrying capacity, impedance and is suitable for the system.

The wiring and cabling will be completed as per SANS 10142-1 and TPL Specifications PL727.

The *Contractor* shall gather all information required from the pump supplier and provide all information required by the pump supplier, to ensure successful communication between the FCP and ECP's and the jockey pump controller.

The design, procurement, supply, manufacture, testing, delivery to site, installation and commissioning shall comply with all *Employer* specifications referenced by this document.

5.6.2 Explosive Atmospheres

The site is a fuel handling depot and as such there are areas on site that are classified as Zone 0, 1 and 2.

The *Contractor* shall be responsible for the suitability of the control system and equipment, instruments and wiring within the scope for the atmosphere in which they will be installed.

The Hazardous Area Classification is included in the Works Information.

The only other classified area of interest is that around the diesel tanks for the fire pump-sets; these only effect the level sensors on these tanks and the associated circuits.

Electrical equipment installed in hazardous areas shall be suitably certified for use in such areas and shall be provided with local IA certificates.

5.6.3 Battery Backup Power Supply

The FCP shall operate on a nominal 24V-DC, derived from a suitable battery backup power supply unit incorporating over-voltage and short-circuit protection to prevent any malfunction or damage which might occur from line power surges.

©Transnet SOC Ltd
Uncontrolled copy when printed

There shall be two battery backup power supply units and each unit shall be equipped with a built in standby battery, rated to maintain operation for 15 minutes after mains power failure in order to allow start-up of the emergency generator supply regardless of any reasonable difficulties encountered, without influencing the operation of the FCP.

The entire power supply and charger circuit including all circuit breakers, shall be supervised. Battery voltage dropping below 90% on discharge, any malfunction or tripped circuit breaker shall result in a fault indication on the main operator interface.

The batteries shall be maintenance free and shall be suitable for installation in inhabited rooms. The batteries shall not discharge flammable, corrosive or toxic fumes.

Each battery backup system shall be housed in a single cabinet, so that there are two cabinets.

The supply for the FCP shall be separate from any other power supplies and no small power or lighting systems may be supplied from the power supply for the FCP. The power supply to the battery backup systems will be from the *Employer's* essential power system.

5.6.4 Panel Construction

Except as modified by the requirements or concessions in this document, the panel design and construction shall comply with the requirements of the *Employer's* standards including PL631 and PL711.

Panels installed outside of enclosed buildings shall be constructed from 304 stainless steel with a minimum IP rating of 65.

Panels in the pump house or any buildings shall be powder coated carbon steel with a minimum IP rating of 66 due to exposure to discharge from water sprinkler systems.

Panels which are supplied from the essential power supply shall be RAL 3001 (Signal Red). Panels supplied from non-essential supply shall be Electric Orange, B26.

Panels shall be designed and constructed in accordance with *Employer's* specification PL631 and PL711. Note that this specifies minimum material thicknesses amongst other things and needs to be consulted prior to design.

All first responder panels shall be wall mountable with adequately sealed cable ducts on the bottom of the panel only.

©Transnet SOC Ltd
Uncontrolled copy when printed

The FCP shall be free standing, base mounted and installed in the pump house. This will house the Controller, the main operator interface and the indication mimic. It shall have sealed cable gland plates on the bottom of the panel and this shall not compromise the IP rating: Cable entries on the side or top of the panel will not be accepted. The *Contractor* shall provide the mounting requirements and panel design timeously to allow the design of the pump house. Any reinforcement, feet or fixtures required for the installation shall be provided with the panels. The panel shall include a 300mm high steel plinth.

Cable glands shall be used for entry of cables into all panels. Cable glands shall be suitable for the service, cable type and size and shall not compromise the IP rating of the panel, when installed. Cable glands shall be located in the gland plate and in such a way so as to allow the tightening and loosening of any gland at any time.

All equipment installed in panels, with the exception of face mounted items on the operator panels, shall be installed on a backing plate mounted to but separate from the back or sides of the panel. All items mounted to backing plates shall be mounted using rivets or self-tapping screws; no nuts may be located on the back of backing plates.

The designer shall consider the available space in the pump house when completing the design of the panel and panel layouts. Full access to all panels and equipment shall be possible through access doors and within the space available. Side access doors will not be permitted. Back access to the panels is not required and the available space does not permit this. The panels have been positioned in the pump house and this location shall not be changed. The *Contractor* shall indicate the space required for the installation of the FCP and battery backup power supply system within 5 weeks of acceptance of a proposed Subcontractor by the *Employer*.

The panels shall have 20% additional space for the installation of relays and terminals.

No trunking run shall have a cable loading of more than 80% for the completed design and installation. The *Contractor* shall supply full trunk loading calculations, for acceptance, with the designs.

All wiring connections outside of dedicated equipment (i.e. relay) connections shall be made in DIN rail mounted, screw type terminal blocks.

All relays shall be DIN rail mounted.

LED lights shall be installed inside each panel section. The lights installed shall provide suitable lighting for personnel working on the panel. The lights shall have a manual switch within the panel as well as a proximity type switch to ensure the light is switched off when the door is closed.

All instrument, component and cable labelling requirements of PL631 and PL711 shall be adhered to.

©Transnet SOC Ltd
Uncontrolled copy when printed

5.6.5 Cabling, Racking and Trenching

The design, supply, delivery to site, handling on site, installation and termination of all cabling and racking shall comply with the *Employer's* requirements.

PL727 is the primary *Employer* specification of relevance to this aspect of the *works*. All cabling and racking shall be supplied in accordance with PL727.

5.6.6 Component Specifications

All components shall comply with the requirements of SANS 10139 and the *Employer's* specification PL631.

5.6.6.1 Power supply system

- The power supply equipment should comply with SANS 50054-4
- The batteries may not discharge any gasses into the Controller or operator panels.
- The batteries should be of sealed lead acid type or better, approved by the *Employer*.
- The battery charger should automatically maintain the batteries and consider the battery temperature in the control of the charging current.
- The battery charger shall be designed and rated so that a battery discharged to its final voltage can be recharged to at least 80% of its rated capacity within 12 hours and to its rated capacity within 24 hours.

5.6.6.2 Annunciator

- The audible fire alarm devise shall comply with SANS 50054-3 and have a minimum sound pressure level of 90 dB at 1m.
- The frequencies produced by the fire alarm sounders should lie in the range of 500Hz to 1000Hz, unless the use of other frequencies is advised and accepted in order to differentiate the alarm from background sounds.
- All annunciators should have similar sound characteristics.
- The sound produced by the annunciators should be distinct from the sounds produced by other alarms and other sounds in the local environment.
- All alarm devices shall be electronic types suitable for low voltage and low power consumption.

©Transnet SOC Ltd
Uncontrolled copy when printed

- The installation and positioning of the devices must conform to SANS 10139.
- Alarm light beacons shall be suitable for installation outdoors, shall be fully weatherproof and UV resistant.

5.6.6.3 Alarm Light Beacons

- Visual alarm signals are to be mounted alongside all primary annunciators.
- These light beacons shall flash at a rate of between 30 and 130 flashes per minute.
- Alarm light beacons shall conform to the requirements of SANS 10139.
- Alarm light beacons shall be suitable for installation outdoors, shall be fully weatherproof and UV resistant.

5.6.6.4 Panel Alarm / Buzzer

- These shall be 22mm panel mounted, shall not reduce the IP rating of the panel and shall provide an output of at least 80 dB.

5.6.6.5 LED Panel Indicators

- These shall be 22mm panel mounted with LED lamps in the required colour.
- These shall not reduce the IP rating of the panel.
- The indicating colour should be evident without the LED lit; i.e. the cover should be coloured.

5.6.6.6 LED Indicating Panel Buttons

- These shall be 22mm panel mounted buttons incorporating LED lamps in the required colour.
- These shall not reduce the IP rating of the panel.
- The indicating colour should be evident without the LED lit; i.e. the cover should be coloured.

5.6.6.7 Plain Panel Buttons

- These shall be 22mm panel mounted buttons in the required colour. Where no colour is indicated the buttons shall be black.
- These shall not reduce the IP rating of the panel.

©Transnet SOC Ltd
Uncontrolled copy when printed

5.6.6.8 Plain Panel Button with safety cover

- These shall be 22mm panel mounted buttons in the required colour. Where no colour is indicated the buttons shall be black.
- These shall not reduce the IP rating of the panel.
- A flip open transparent, normally closed cover shall be installed over the button to prevent unintentional pressing of the button.

5.6.6.9 Panel Labels / Arrangement

- All buttons and indicators shall be labelled.
- Buttons and indicators shall be labelled as indicated on the drawings attached in the Works Information.
- Labels shall be produced by engraving on Traffolyte or similar approved material and shall be fastened to the panel with epoxy glue or stainless screws.
- All text shall be black on a white background
- All text shall be Arial font
- All text shall be capitals
- Text sizes should be the following heights:
    - Main Labels: 12 mm
    - Secondary Labels: 5 mm
    - Minor Labels: 3 mm
- All text shall have at least 1 mm clearance from any adjacent markings and at least 2 mm clearance from any components
- Spacing between unrelated buttons shall be at least 5 mm more than spacing between related buttons.

©Transnet SOC Ltd
Uncontrolled copy when printed

5.6.6.10 Manual Call Points (FMMS / Break Glass Switches)

- All manual call points shall be normally open type switches.
- Shall comply with the requirements of SANS 50054-11 as applicable.
- Shall be suitably rated for use in hazardous area Zone 1 areas
- Shall have a replaceable, safe to break, glass cover over the switch to prevent unintentional activation.

5.6.6.11 Terminals

- Terminal blocks shall be high quality, approved by the *Employer* and as per the *Employer's* specifications.

5.6.6.12 General

The *Contractor* is responsible for the selection and specification of all other components for use in the control system and shall ensure that such components are suitable for service in a fire protection system and meet the *Employer's* requirements as documented in this document and the supplied *Employer* specifications. All tools required for access or maintenance must be provide for all supplied equipment.

5.6.7 Installation Specification

Field instrumentation will be hardwired from the main fire control panel through field equipment boxes by means of multicore cables and on to the field equipment.

The installation shall be in accordance with SANS 10139.

The wiring and cabling will be completed as per SANS 10142-1 and TPL specification PL727.

All electrical and instrumentation cable shall be installed on new racking and, if applicable, in new sleeves.

The FCP will house the relay logic system (Controller); the panel will be as per the TPL standard and will include terminations for field wiring, all internal equipment and wiring.

The panel shall have a separate base frame which facilitates moving of the panel using a forklift / pallet jack and shall also have lifting lugs to facilitate handling with a crane or other lifting equipment.

5.7 System Layout

A control system site general arrangement and provisional cable routes drawing is included in the Works Information.

5.8 Quality Assurance

5.8.1 Quality Control Plan (QCP)

The *Contractor* shall provide a QCP and documentation for the design, approval, supply, installation and commissioning of the fire control system as well as the instrumentation scope of work.

The QCP shall be submitted to the *Employer* for approval. The *Employer* shall apply hold, witness and surveillance points as deemed necessary. The hold points will require the signature of the *Employer* as appropriate, indicating acceptance of the work performed, before proceeding with the following section of the *works*.

5.8.2 Design Review and Approval

The entire design, Approved for Construction by the *Contractor*, shall be issued to the *Employer* for review and comment prior to revision (if required) and submission to the *Employer* for review and acceptance.

The *Employer* will accept the design once the changes required by the *Employer* have been effected.

The *Employer's* comments on the AFC design shall not be considered acceptance of the design. The *Employer* will provide comments within the period for reply.

The *Contractor* shall conduct a detailed design review workshop with the *Employer* and their design and engineering representatives once the *Contractor* has addressed the *Employer's* comments on the AFC design; this shall be a hold point and shall be completed and the design accepted by the *Employer* before construction commences.

The *Contractor* shall make provision in their offer for travel to, attendance at, and to conduct the design review workshop in the *Employer's* offices in Durban, and shall provide at least two (2) weeks' notice of the date for the meeting and shall accommodate the *Employer* and *Employer's* and their representative's availability in finalising the date. The *Contractor* shall allow for a change of up to five (5) working days from the proposed date; only delays beyond five working days may be considered a compensation event.

The design presented shall include a fully detailed description of the system functionality and how it operates in order to assist the reviewers in understanding both the functionality of the system and the

©Transnet SOC Ltd
Uncontrolled copy when printed

means by which this is achieved with the circuit design; this document will be central to the acceptance by the *Employer*.

The design may be submitted in portions such that the relay logic / single line diagrams / operating logic is reviewed and accepted prior to the panel layouts being completed however this may require additional design review workshops.

The following shall be submitted for approval to the *Employer*:

- Instrument index including manufacturer, part number, description and rating at a minimum
- Cause and effect diagram
- Schematic diagrams for FCP (controller, main operator interface, indicator mimic), first responder panels and battery backup power system
- Termination diagrams for FCP (controller, main operator interface, indicator mimic), first responder panels and battery backup power system
- Panel layouts for FCP (controller, main operator interface, indicator mimic), first responder panels and battery backup power system, drawn to scale, indicating all buttons, labels, gauges, indicators and all text sizes.
- Panel general arrangement drawings for FCP (controller, main operator interface, indicator mimic), first responder panels and battery backup power system, indicating size, doors, base, lifting points etc.
- Cable block / interconnection diagrams
- Cable route layouts indicating cable racks, cable sleeves and draw boxes
- Instrument equipment layout drawings
- Cable schedule
- Equipment and instrument data sheets
- Certification such as explosion protected equipment (Ex and IA certificates) and intrinsically safe loop diagrams (if applicable)

The *Contractor* may be required to justify component sizing by calculations: This includes for wiring, circuit breakers, power supply and others as the *Employer* may require.

©Transnet SOC Ltd
Uncontrolled copy when printed

5.8.3 Equipment Handover and Document Procedure

The *Contractor* shall comply with the *Employer's* Equipment Handover and Document Procedure, document PL 917, during the testing and handover of the FCP and first responder panels.

5.8.3.1 Factory Acceptance Testing

The quality control shall include a full FAT of the FCP and first responder panels. The FAT shall verify that the Controller, installed in its panels, provides the full functionality required and this test shall be a pre-run of the final operational verification tests.

The following minimum information will be reviewed by the *Employer* at the FAT for the FCP:

- Dimensional checks and equipment arrangement conformance to the AFC drawings
- Labelling of components
- Arrangement and mounting of wiring, trucking and components
- Terminations
- IP measures and certificates
- Cable gland plate and gland installation
- Functionality including:
    - correct activation of command relays
    - correct display of event inputs
    - correct logic process based on command inputs
    - correct logic process based on event inputs
    - all interlocking of operator interfaces (including NOC)
    - all interlocking between operator interfaces (including NOC)
- Quality Assurance Files
- DFT of corrosion protection systems
- Other requirements of this specification not specifically listed above

5.8.4 Commissioning

The quality control shall include a full commissioning of the system.

The commissioning plan shall indicate all tests to be performed and the sequencing of these.

Commissioning shall include full tests of the installed circuits and components followed by functional testing where all systems and functions of the system are tested and concluded with a full operational test of all functions and permutations of functions.

©Transnet SOC Ltd
Uncontrolled copy when printed

Commissioning shall, at a minimum, be completed in accordance with SANS 10139, Section 11 recommendations. Further detail on the commissioning requirements is located within the Works Information.

All interfaces to existing systems and systems supplied by others shall also be fully verified by the *Contractor*.

5.9 Training

The *Contractor* shall provide comprehensive training for up to ten *Employer* personnel. The *Contractor* shall submit the training plan to the *Employer* for acceptance.

The training shall include:

- Classroom training in the normal operation of the system, including where different elements of the control, interlocking and interlinking are located.
- Practical instruction in the operation of the system

The training shall cover:

- Normal operations
- Effects of interlocking
- Addressing any fault conditions.
- Basic maintenance
- Battery system maintenance

Each trainee shall be issued with an operating manual which correlates with the training offered.

5.10 Design deliverables

Data packs shall be provided in an indexed lever arch file, with a scanned electronic copy.

The required documentation includes but is not limited to:

- As Built design documentation including:
    - Control functional description
    - Instrument index
    - Cause and effect diagram
    - Single line diagram
    - Schematic diagrams
    - Termination diagrams
    - Panel layouts
    - Panel general arrangement drawings
    - Cable block / interconnection diagrams
    - Cable route layouts
    - Instrument equipment layout drawings
    - Cable schedule
    - Component list
    - Equipment and instrument data sheets
    - Equipment certification
- Operation and maintenance manuals
- Commissioning reports

5.11 Other Obligations of the *Contractor*

The *Contractor* shall comply with all other documentation issued by the *Employer*.

5.11.1 Erection Works

In order to comply with South African Occupational Health and Safety Regulations, the *Contractor* shall supply a rigging study for all lifting and rigging activities, these shall be assessed by the *Employer* and safety personnel and approved before any lifting is carried out.

The *Contractor* shall advise who will be responsible for the completion of all rigging studies anticipated to be required during construction.

Should such a study not be required, a suitable reason shall be given as to why this requirement has not been complied with; i.e. why the study is not required.

5.11.2 Transport of Material on Site

The *Contractor* shall be responsible for movement of material from the appointed laydown area to the site for erection. Care shall be taken at all times to ensure that the material remains in good condition.

The *Contractor* is responsible for the provision of suitable storage conditions on site.

5.11.3 Tools for Erection Works

All tools and equipment (incl. cranes, fixed and moveable) required for the completion of the *works* shall be supplied by the *Contractor* and included in the prices.

©Transnet SOC Ltd
Uncontrolled copy when printed

FIRE SYSTEM SPECIFICATION

ECP FCP CONTROL NARRATIVE

Document number	PL 916
Version number	1
Classification	Unclassified
Effective date	1 July 2025
Review date	1 July 2028

©Transnet SOC Ltd
Uncontrolled copy when printed

SUMMARY VERSION CONTROL

VERSION NO.	NATURE OF AMENDMENT	PAGE NO.	DATE REVISED
0	New Specification	ALL	1 July 2025
1	Comments during review between TPL and GreyJones included	ALL	11 July 2025

Note: Only latest amendments and/or additions are reflected in italics in the body of the document.

©Transnet SOC Ltd
Uncontrolled copy when printed

DOCUMENTATION SIGN-OFF SHEET

I, the undersigned hereby approve this procedure.

ROLE	CAPACITY/ FUNCTION	SIGNATURE	DATE
Compiled by:	**Pieter Jacobs**		
Approved by:	**Papa Moratwe**		

©Transnet SOC Ltd
Uncontrolled copy when printed

TABLE OF CONTENTS

1. Introduction 5

2. Acronyms 5

3. Definitions 6

4. Engineering Standards 7

4.1 Referenced Standards 7

5. Modes 7

6. System Activation 8

7. Fire Control Panel (FCP) 8

7.1 Auto Mode 8

7.1.1 Engine Run Philosophy 8

7.1.2 Engine Starting Sequence 8

7.2 Test mode 11

7.2.1 Engine Run Philosophy 11

7.2.2 Engine Starting Sequence 11

8. Engine Control Panel (ECP) 12

8.1 Auto Mode 12

8.1.1 Engine Run Philosophy 12

8.1.2 Power Failure Signal 12

8.2 Maintenance Mode 12

8.2.1 Engine Run Philosophy 12

8.2.2 Power Failure Signal 13

8.3 Emergency Stop 13

8.4 ECP Indication Lamps 13

9. Engine Control Module (ECM) 14

9.1 Auto Mode 14

9.1.1 Engine Run Philosophy 14

9.2 Manual Mode 15

9.2.1 Engine Run Philosophy 15

9.2.2 Battery Set Cycling 15

9.3 Two Stage Engine Shutdown 15

©Transnet SOC Ltd

Uncontrolled copy when printed

ECP FCP CONTROL NARRATIVE

1. INTRODUCTION

The fire protection system will have two fire pump sets, one assigned as duty, and one assigned as standby.

Each pump set will comprise a diesel engine, a water pump, a foam pump and an ECP. There shall be interconnection between the ECP's and the FCP to allow the pumps to be started from the FCP, as well as for the reporting of the pump status from the ECP's to the FCP.

Each pump set will comprise the following major components:

- An engine control panel (ECP)
- A diesel engine which will be the primary driver for the fire water pump and the foam concentrate pump
- A fire water pump
- A foam concentrate pump

The ECP of the pump sets shall interface with FCP in accordance with this control narrative.

2. ACRONYMS

The following acronyms shall apply when reading this specification;

AC	Alternating Current
DB	Distribution Board
DC	Direct Current
ECM	Engine Control Module
ECP	Engine Control Panel
FAT	Factory Acceptance Test
FCP	Fire Control Panel
I/O	Input Output
IP	Ingress Protection
JPCP	Jockey Pump Control Panel
LED	Light emitting diode
NFPA	National Fire Protection Association
NOC	TPL National Operating Centre

©Transnet SOC Ltd
Uncontrolled copy when printed

OEM	Original Equipment Manufacturer
P&ID	Process and Instrumentation Diagram
PLC	Programmable Logic Controller
QCP	Quality Control Plan
SANS	South African National Standard
TPL	Transnet Pipelines

3. DEFINITIONS

The following definitions shall apply when reading this specification;

Term	**Definition**
Abnormal Termination	Abnormal termination of the run signal means that the run command transmitted by the respective ECP is lost (i.e. a loss of fuel has occurred etc.) before the engine is normally stopped The respective ECP will NOT transmit an 'Engine Failure' signal to the FCP during this event (when engine protection is disabled)
Command	The transmission of a signal to initiate an action.
Contractor	The *Contractor* is the *Contractor* as defined in the Contract Data or the *Contractors* sub-*contractor*
Controller	The master relay-based logic controller housed within the Fire Control Panel.
Engine Control Module (ECM)	Deep Sea Electronics (DSE) module or approved equivalent fitted within the ECP and used to control the diesel engine
Engine Control Panel (ECP)	Control panel for starting, control and operation of each engine driven fire pump, incorporating an operator interface, gauges and alarms and the engine controller. Each pump-set will be fitted with a dedicated ECP interfaced to the FCP.
ECP1	ECP at Duty Pump-set
ECP2	ECP at Stand-by Pump-set
Employer	The *Employer* is the Employer as defined in the *Contract Data*
Engine Failure	Engine failed to start after 6 start attempts or; Engine Overspeed setting triggered or; ECP is in Maintenance Mode
Event	The transmission of a signal indicating an action has taken place.
Fail to Start (FTS)	The corresponding ECP did not start after six attempts made by the FCP to start it
Fire Control Panel (FCP)	Panel including a controller which is used to control the overall fire system including the starting of the ECP's
hr	Hour

©Transnet SOC Ltd
Uncontrolled copy when printed

Normal Termination	Normal termination of the run signal means that the ECP/ECM has transmitted a successful run event and the ECP is brought to a stop by pushing the stop button or emergency stop button on the respective ECP only.
Scenario (Fire)	A scenario is a specific fire event, e.g. tank bund fire, for which fire protection system requirements can be predetermined.
Starting Sequence	Sequence initiated at and controlled by the FCP and used to flip-flop the starting attempts between the duty and the stand-by ECP's
System	Part of the fire protection, dedicated to the protection of one area of the site and supplied with water or premix through a single pressure regulating deluge valve.

4. ENGINEERING STANDARDS

Although not bound in nor issued with this document, the following standardized specifications shall form part of the contract document:

4.1 Referenced Standards

PL 901	Fire Pump-set Specification
PL 913	Fire Control System and Instrumentation Design, Supply and Installation Specification and Scope of *Works*

5. MODES

Each of the system components have different modes of operation as shown in the table below:

Component	**Mode**	**Activation**
FCP	Auto or Test Mode	Activated by a key switch located on the FCP
ECP	Auto or Maintenance Mode	Activated by a key switch located on the ECP
ECM	Auto or Manual Mode	Activated by state of ECP key selection switch. May be activated by direct control on the ECM when ECP is in Maintenance mode

©Transnet SOC Ltd
Uncontrolled copy when printed

6. SYSTEM ACTIVATION

When the ECP's are in Maintenance Mode they can only be started from the ECM.

When the ECP's are in Auto Mode they can only be started from the FCP and can be activated by any one of the Systems, Scenarios or engine start push buttons that are located on the main operator panel, the first responder operator panels or the National Operations Centre (NOC) located off site.

7. FIRE CONTROL PANEL (FCP)

The Engine Run Philosophy and Starting Sequence between the FCP and ECP's is discussed below with the FCP placed in Auto or Test mode.

7.1 Auto Mode

7.1.1 Engine Run Philosophy

When the FCP is in Auto Mode, the engine will be controlled by the ECM according to a "run to destruction" philosophy. The FCP shall transmit a signal to the ECM within the ECP to cause the engine protection to be disabled.

The ECM will therefore ignore any engine warnings (e.g. low oil level, high temperature etc.) and run the engines until a stop command is initiated at the respective ECP or if the engine reaches the overspeed setting.

With the FCP in Auto Mode, the FCP will initiate the starting sequence for the ECP's upon activation of a remote start signal.

The FCP cannot cause an engine to stop except as part of the starting sequence.

7.1.2 Engine Starting Sequence

With the FCP in Auto Mode, upon system activation, the FCP will send a start command to the duty pump-set ECP (ECP1), provided that ECP1 is in Auto Mode.

Should ECP1 be in Maintenance Mode, ECP1 will transmit an 'Engine Failure' signal to the FCP and the FCP will not attempt to start ECP1 and instead will immediately attempt to start the standby pump-set ECP (ECP2).

With ECP1 in Auto Mode, ECP1 will latch the start signal and attempt to start the duty pump-set. When an ECP has satisfied the run condition, the respective ECP will send a run signal to the FCP.

©Transnet SOC Ltd
Uncontrolled copy when printed

If the FCP does not receive a run signal from ECP1 within 15 seconds, the FCP will send a stop command to ECP1 (i.e. an ECP will only have 15 seconds to satisfy the run condition and transmit the run condition to the FCP before receiving a stop command from the FCP).

Upon transmission of the stop command to ECP1, the FCP will transmit a start command to ECP2. With ECP2 in Auto Mode, ECP2 will latch the start signal and attempt to start the stand-by pump-set.

If ECP2 is in Maintenance Mode, ECP2 will transmit an 'Engine Failure' signal to the FCP and the FCP will not attempt to start ECP2. The 15 second rest period will still apply before attempting to start ECP1 again.

Should the FCP not receive a run signal from ECP2 within 15 seconds, the FCP will issue a stop command to ECP2.

The FCP will terminate and reset the starting sequence upon receipt of an 'Engine Failure' signal from both ECP's.

To monitor the number of starting attempts performed by each ECP/ECM, and to enable the FCP to transmit an 'Fail to Start' (FTS) signal to the respective ECP, the FCP will contain a counting mechanism.

The above starting sequence of a 15 second start attempt at ECP1 and ECP2 will be performed by the FCP a total of 6 times on each ECP.

The counting mechanism within the FCP will count the number of times a start signal has been issued to each ECP.

The FCP will generate a 'Fail to Start' command and transmit the command to the respective ECP/ECM if the 6th count is reached. Upon receipt of the 'Fail to Start' command from the FCP, the respective ECP/ECM will generate an 'Engine Failure' event and transmit this signal to the FCP and will thereafter be unable to be started by the FCP until the respective ECP/ECM has been reset.

To ensure that FCP start attempt counts are suitably reset outside of an emergency event and to clear the start attempt count memory between long periods of start attempts, the FCP will also contain an additional timing mechanism.

An event is not foreseen where the pump-sets will be required to attempt to start a total of 6 times each within a two hour period. After the two hour period, the 6 start attempt at each pump-set can be re-activated.

©Transnet SOC Ltd
Uncontrolled copy when printed

The timing mechanism within the FCP will begin the count from 0 to 7200 seconds (2 hours) upon the first start signal having been issued to an ECP.

The counting and timing mechanism within the FCP will be reset once the timer reaches 7200 seconds or when an ‘Engine Failure’ event is transmitted from both ECP/ECM’s.

Should an ECP/ECM transmit to the FCP a successful run event within the FCP count allocation, the FCP counting mechanism will NOT reset to zero, however the FCP will suspend the starting arrangement between ECP’s.

Normal termination of the run signal means that the ECP/ECM has transmitted a successful run event and the ECP is brought to a stop by pushing the stop button or emergency stop button on the respective ECP only.

Abnormal termination of the run signal means that the run feedback transmitted by the respective ECP is lost before the engine is normally stopped i.e. loss of fuel, etc. The respective ECP will NOT transmit an ‘Engine Failure’ signal to the FCP during this event.

Engine overspeed will transmit an ‘Engine Failure’ signal from the respective ECP to the FCP.

The FCP starting sequence will be reset upon activation of an ECP stop command (normal termination) or by activation of an FCP reset command.

Should the run signal be abnormally terminated from either of the ECP’s, the FCP will continue with the starting sequence from where it left off.

An ECP will only transmit an ‘Engine Failure’ command to the FCP if the 6 count cycle has been reached or an overspeed condition has occurred.

Whilst a remote start command is active and the FCP counting mechanism is within the 6 count allocation for each ECP, the FCP starting arrangement will always flip-flop between ECP’s until an ECP has transmitted a run event or both ECP’s have transmitted ‘Engine Failure’ events.

The FCP will only cease and reset the starting sequence upon receipt of a ‘Reset’ command from the FCP (a ‘Reset’ command at the FCP is initiated when the ‘Master Reset’ push button on the FCP is pressed), a normal termination is transmitted from either ECP, or from an ‘Engine Failure’ event from both ECP’s.

The ‘Engine Failure’ command from an ECP will be transmitted to the FCP until the respective ECP is placed in ‘Maintenance’ Mode and the ECM is reset.

©Transnet SOC Ltd
Uncontrolled copy when printed

Resetting of the ECM will clear overspeed signals and will also reset and clear the 'Engine Failure' event transmitted to the FCP in the instance that the 'Fail to Start' command is transmitted due to the 6 count mechanism being reached.

7.2 Test mode

7.2.1 Engine Run Philosophy

When the FCP is in Test Mode, the "run to destruction" philosophy will be NOT be adopted by the ECM. The FCP shall transmit a signal to the ECM within the ECP to enable the engine protection.

In this mode, the ECM will shut down the engine in the event that any engine warnings are received (e.g. low oil level, high temperature etc.), if a stop command is initiated at the respective ECP or if the engine reaches the overspeed setting.

With the FCP in Test Mode, the FCP will ignore any ECP start signals that do not originate from the FCP (i.e. with the FCP in Test Mode, the ECP's cannot be started from the NOC or from the first responder operator panels).

NB: ECP's that are placed in Maintenance Mode will not be started remotely and can only be started locally at the ECM.

7.2.2 Engine Starting Sequence

The starting sequence between the FCP and ECP's when the FCP is in Test Mode will be the same as when in Auto Mode, except that the shutdown of an engine due to an engine warning being generated will cause the respective ECP to transmit an 'Engine Failure' event to the FCP until the ECM is reset.

With the FCP in Test Mode and upon activation of the 'Engine Start' button on the FCP, the FCP starting sequence will be initiated as if a system or zone button on the FCP was activated.

During the weekly tests and for weekly alternate starting of engines, the ECP that is not being tested should be placed into Maintencane Mode to inhibit the selected engine from starting.

©Transnet SOC Ltd
Uncontrolled copy when printed

8. ENGINE CONTROL PANEL (ECP)

8.1 Auto Mode

8.1.1 Engine Run Philosophy

With the ECP placed in Auto Mode, the engine can only be started via the remote start command issued by the FCP.

Stopping of the engine can only be achieved at the respective ECP by a dedicated stop push-button or emergency stop push button located on the ECP. The ECP stop button will initiate the two-stage engine shut-down sequence controlled by the ECM.

It will not be possible to stop the engine using the ECM.

With the ECP in Auto Mode, the ECM will be placed and locked in Auto Mode, and the Mode cannot be changed from the ECM.

With the ECP in Auto Mode, the FCP Auto or Test Mode selection will determine whether the engine protection is enabled or disabled.

8.1.2 Power Failure Signal

In Auto Mode, power failure signals will be transmitted from the respective ECP to the FCP upon failure of the ECP battery chargers or a low battery status. The power failure signal shall not prevent the FCP from attempting to start the ECP.

8.2 Maintenance Mode

8.2.1 Engine Run Philosophy

With the ECP in Maintenance Mode, the ECM will be placed in Manual Mode. It may be possible for an operator to switch the ECM from Manual to Auto Mode.

With the ECP placed in Maintenance Mode, the engine cannot be started remotely via the start command controlled by the FCP. The ECP will transmit an ‘Engine Failure’ signal to the FCP and the engine can only be started locally at the ECP via the ECM start button.

Stopping of the engine can only be achieved at the respective ECM by the stop button located on the ECM, or the dedicated stop push-button located on the ECP if the ECM allows for this functionality. The ECM stop button will initiate the two-stage engine shut-down sequence controlled by the ECM.

The engine will also be stopped using the emergency stop push button.

©Transnet SOC Ltd
Uncontrolled copy when printed

With the ECP in Maintenance Mode, engine protection is always enabled.

8.2.2 Power Failure Signal

In Maintenance Mode, power failure signals will be transmitted from the respective ECP to the FCP upon failure of the ECP battery chargers or a low battery status. The power failure signal shall not prevent the ECP from attempting to start locally.

8.3 Emergency Stop

The ECP will be fitted with an emergency stop button that will stop the engine under all running conditions and will be hard-wired and over-ride the ECM. The two stage engine shut-down sequence will be bypassed when the emergency stop button is pressed.

8.4 ECP Indication Lamps

The ‘Start Failure’ lamp shall illuminate on the ECP when the engine failed to start on any attempt.

An engine overspeed shall be indicated as a lamp on the ECP or indicated on the ECM module.

Activation of the emergency stop shall be indicated as a lamp on the ECP or as an indication lamp on the ECM module.

The receipt and successful latch of a remote start signal shall be indicated as a lamp on the ECP or as an indication lamp on the ECM module.

A ‘Cool Down’ indication shall be indicated as a lamp on the ECP or as an indication lamp on the ECM module whilst the engine is running in the second stage of the two-stage shut down sequence.

©Transnet SOC Ltd
Uncontrolled copy when printed

9. ENGINE CONTROL MODULE (ECM)

The Engine Run Philosophy and Battery Set Cycling is discussed below when the ECM is placed in Auto or Manual Mode. The Two Stage Engine Shutdown and ECM resetting is also discussed below.

9.1 Auto Mode

9.1.1 Engine Run Philosophy

The ECM will default to Auto Mode when the ECP is placed in Auto Mode.

With the ECM in Auto Mode, the respective ECM will receive from the FCP the start and stop commands as well as the 'Fail to Start' event from the FCP should the respective 6 start attempt count be reached within the FCP.

The ECM will issue a run event to the FCP when the engine has satisfied a run condition.

The ECM will issue an 'Engine Fail' event to the FCP when the FCP counting mechanism has reached count 6, when the engine has reached an overspeed condition, or an engine alarm condition is signaled whilst the FCP is in Test Mode.

Whilst the engine is running, it will not be possible to manually stop the engine at the ECM with the ECP in Auto Mode. The engine will be manually stopped by a push-button located on the ECP or by the emergency push button.

With the ECP in Auto Mode the ECM functionality will be edit-locked and only viewing of the ECM settings will be possible.

With the ECM in Auto Mode and the FCP in Auto Mode, the ECM will disable engine protection and run the engines to destruction.

With the ECM in Auto Mode and the FCP in Test Mode, the ECM will enable engine protection and shutdown the engines if any engine warnings are activated.

With the ECP in Maintenance Mode, the engine protection is always enabled regardless of whether or not the ECM is in Auto or Manual Mode.

©Transnet SOC Ltd
Uncontrolled copy when printed

9.2 Manual Mode

9.2.1 Engine Run Philosophy

The ECM will default to Manual Mode when the ECP is placed in Maintenance Mode. In this Mode, the respective ECM will not receive start and stop commands from the FCP and the engine can only be started from the start button located on the ECM.

The ECM will issue a run event to the FCP if the engine has satisfied a run condition even when the respective ECP has issued an 'Engine Fail' event to the FCP due to the ECP being in Maintenance Mode.

Transmission of the run event to the FCP will prevent the alternate ECP from starting whilst a run event is transmitted from an ECP that is in Maintenance Mode (two engines shall not be permitted to run simultaneously).

Stopping of the engine can be achieved by the stop button located on the ECM, or the dedicated stop push-button located on the ECP if the ECM allows for this functionality, or by an engine warning signal, emergency stop or an engine overspeed condition.

In Manual Mode the ECM functionality will not be edit-locked and editing of the ECM settings is possible.

9.2.2 Battery Set Cycling

With the ECM in Manual Mode, the ECM will alternate starting between the duty and stand-by battery set during alternate start commands received from the FCP. The ECM will not attempt to start the engines from battery units that are not fully operational. If this function cannot be provided by the ECM then it will be catered for within the ECP.

9.3 Two Stage Engine Shutdown

The ECM will reduce the speed of the engine from rated speed to idle speed before halting to a complete stop upon initiation of the stop button located on the ECP or the ECM stop button.

Clearing of 'Engine Failure' and overspeed signals at the respective ECP will be done using the ECM Reset function.

An ECP reset will be done by placing the ECP in Maintenance Mode and by pushing the Stop/Reset mode button on the ECM.

©Transnet SOC Ltd
Uncontrolled copy when printed