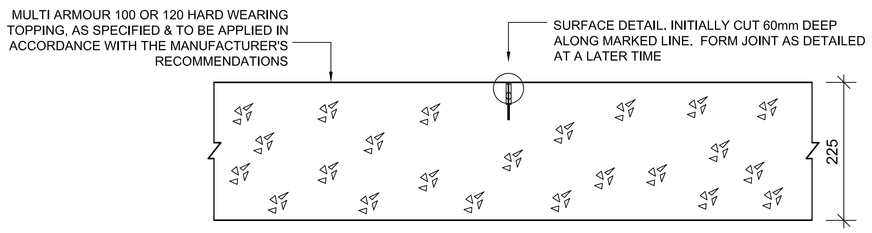

S JOINT - SAW CUT SHRINKAGE JOINT DETAIL
GENERALLY TRANSVERSE AT 4m SPACING
NTS

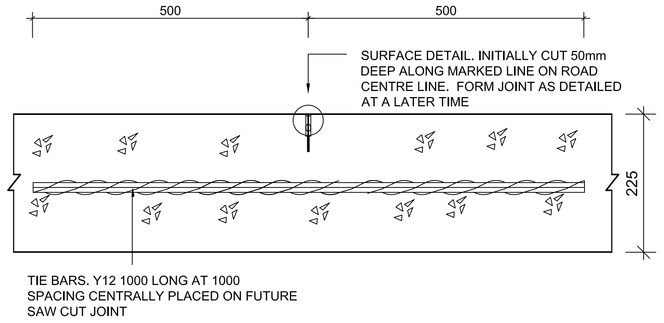

T SAW CUT TIED SHRINKAGE JOINT DETAIL
GENERALLY LONGITUDINAL
NTS

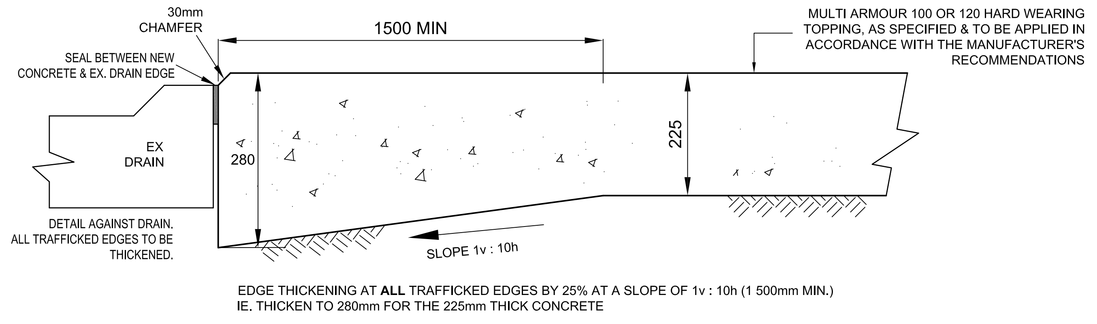

EDGE THICKENING AT **ALL** TRAFFICKED EDGES BY 25% AT A SLOPE OF 1v : 10h (1 500mm MIN.)
IE, THICKEN TO 280mm FOR THE 225mm THICK CONCRETE

EDGE THICKENING DETAIL : AT TRAFFICKED EDGES ONLY
NTS

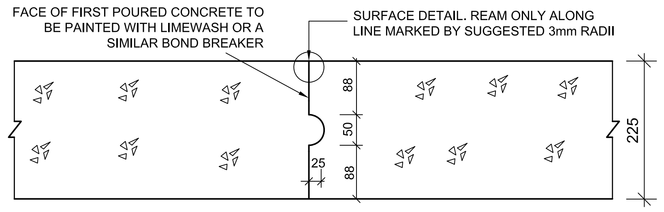

CONSTRUCTION JOINT - ALTERNATIVE DETAIL
GENERALLY AT END OF DAY'S POUR
NTS

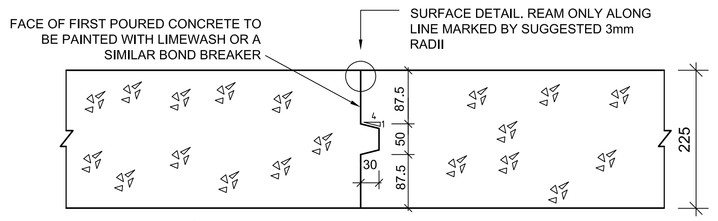

C JOINT - CONSTRUCTION JOINT DETAIL
GENERALLY AT END OF DAY'S POUR
NTS

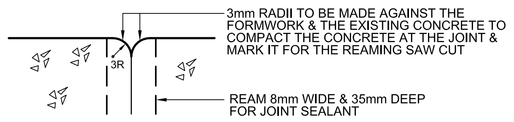

CONSTRUCTION JOINT SURFACE DETAIL
NTS

CONCRETE PAVEMENT LAYERWORKS

THICKNESS		DESCRIPTION
225mm		**35MPa concrete** with Multi Armour 100 or 120 as specified (or equal approved) topping inc curing compound, application in accordance with the manufacturer's recommendations.Generally a rough powerfloat finish.
150mm	Subbase	**Subbase.** G5 quality gravel / crushed rock compacted to 98% Mod AASHTO density **or** G5 quality gravel / crushed rock stabilised with a nominal; 4% by mass of cement and compacted to 95% Mod AASHTO density.
150mm	Subgrade	In situ material, generally minimum G7 quality in situ soil or fill compacted to 93% Mod AASHTO density.

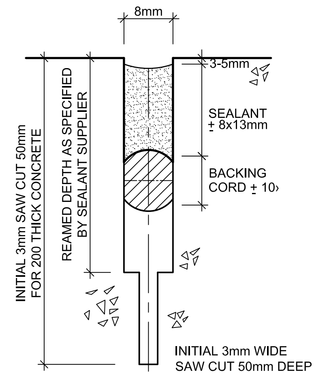

SUGGESTED SEALANT DETAILS
NTS

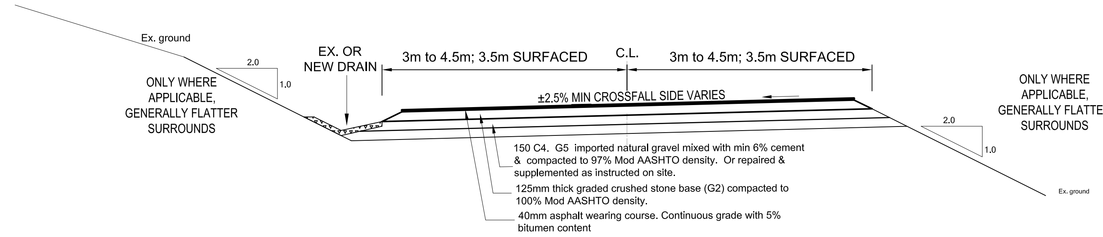

GENERAL CROSS SECTION : ASPHALT SURFACED ROADS
NOT TO SCALE

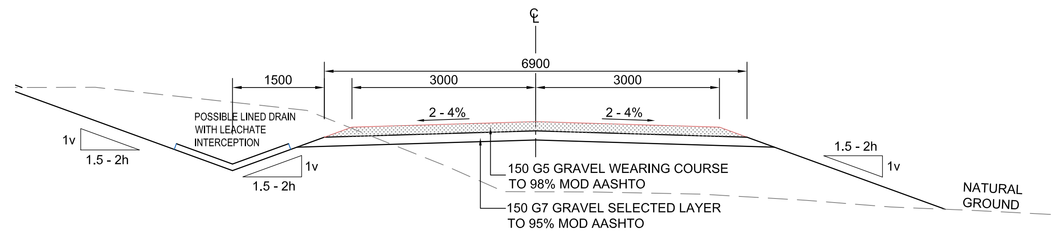

TYPICAL CROSS SECTION - GRAVEL ROADS
SCALE 1 : 50

NOTES :

SAFETY WARNING: The Contractor will be working on the landfill so attention is drawn to the flammable, explosive and asphyxiative nature of landfill gas resulting from the de-composition of waste. Landfill gas can migrate through ground and the Contractor shall take all necessary precautions to ensure the safety of his/her personnel and all third parties from the dangers of landfill gas. Landfill gas is particularly dangerous in enclosed spaces (manholes etc.) The Contractor's personnel shall not enter the operational areas and contact with refuse and leachate should be kept to a minimum. No scavenging of refuse is allowed. Workmen are to be provided with the appropriate safety clothing and equipment.

The lighting of fires is strictly prohibited, due to the possible presence of landfill gas, and smoking on site will also be prohibited. The use of naked flames must only take place under safe conditions. Smoking shall only be allowed in designated safe areas.

The Contractor's attention is also drawn to the possible hazards to health of waste and contaminated water, and adequate health and safety precautions shall be taken.

The Contractor shall make all Sub-Contractors, visitors, third parties and agents aware of the hazards of landfill gas on the site, and shall ensure that they take the necessary precautions.

The Contractor shall take adequate Health and Safety precautions when working in and adjacent to waste. The wastes placed in the in-filled areas are reported to have been predominantly municipal wastes (domestic, commercial, industrial and inert). However, the Contractor should also make provision for the fact that any landfill may contain small quantities of hazardous substances other than those permitted under a site licence. No guarantee can be given that small quantities of other substances, including hazardous industrial waste, have not been concealed within other wastes and disposed without knowledge of the site operator.

THE EXTENT, LIMITS AND LOCATION OF THE WORKS SHOWN ARE APPROXIMATE ONLY AND MAY BE VARIED BY THE ENGINEER DEPENDENT UPON THE BUDGET AND CONDITIONS PREVAILING AT THE TIME OF CONSTRUCTION.

POSITION OF ALL THE CELL BOUNDARIES SHOWN IS TO BE VERIFIED & THE EXTENT OF THE WORKS CONFIRMED BY THE ENGINEER.

SURFACE & SUBSOIL DRAINAGE TO INTERCEPT FUTURE LEACHATE AND EXISTING GROUNDWATER FLOWS WILL BE POSITIONED AS REQUIRED DURING THE CONTRACT.

THERE ARE A NUMBER OF EXISTING LEACHATE PIPELINES WITHIN THE AREA OF THE WORKS AND THESE NEED TO BE LOCATED AND PROTECTED BEFORE ANY WORK IS STARTED.

ANY DAMAGE TO THE EXISTING LINER CAUSED BY THE CONTRACTOR IS TO BE REPAIRED TO THE ENGINEERS APPROVAL AT THE CONTRACTORS EXPENSE.

THE METHOD OF CONSTRUCTION IS TO BE SELECTED BY, AND REMAIN THE RESPONSIBILITY OF THE CONTRACTOR. DETAILS SHALL BE PROVIDED TO THE ENGINEER.

ALL HDPE PIPING IS TO BE **PE 100 SDR 17 PN 10** UNLESS OTHERWISE INDICATED.

THE EDGE OF THE EXISTING LINING NEEDS TO BE DETERMINED BY INVESTIGATION ON SITE WITHOUT DAMAGING IT. THE SETTING OUT POINTS ARE INDICATIVE ONLY.

LEVELS RELATED TO THE LINER REFER TO THE TOP OF THE PROTECTION LAYER UNLESS OTHERWISE STATED

CONTOURS DEPICT WASTE AS AT SEPTEMBER 2022 FOR THE LANDFILL SITE.

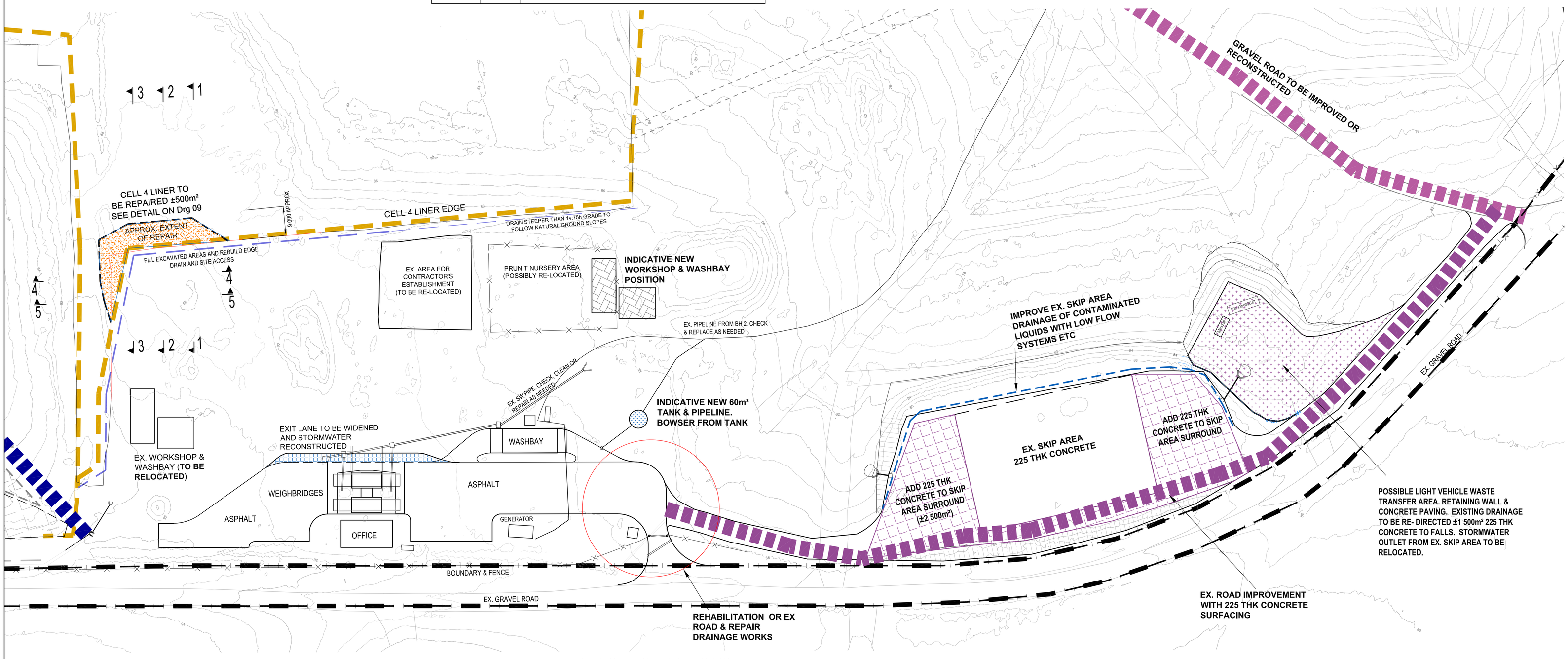

PLAN OF ANCILLARY WORKS
SCALE 1 : 500

SCALE ON REDUCED DRAWING
100mm ON ORIGINAL DRAWING

DRAWING SCHEDULE

WS 7638 - 01 OVERALL PLAN SHOWING CELL 6 & ANCILLARY WORKS
WS 7638 - 02 PLAN & DETAILS CELL 6 EARTHWORKS & DRAINAGE
WS 7638 - 03 PLAN & DETAILS - NEW LEACHATE POND 3 EARTHWORKS & DRAINAGE
WS 7638 - 04 CELL 6 - LINING PLAN & DETAILS
WS 7638 - 05 NEW LEACHATE POND 3 : LINING PLAN & DETAILS
WS7638 - 06 NEW LEACHATE POND 3: DETAILED PLAN
WS 7638 - 07 CELL 6 & LEACHATE POND 3 : CONSTRUCTION DETAILS
WS 7638 - 08 CELL 6 & LEACHATE POND 3 : CONCRETE DETAILS
WS 7638 - 09 CELL 6 & LEACHATE POND 3 : PLAN AND DETAILS : CAPPING

No.	DATE	REVISION DESCRIPTION
AA	MAY 2023	FOR TENDER PURPOSES

REVISIONS

DESIGN ENGINEER / EMPLOYER'S AGENT:
WILSON & PASS Inc
email jon.pass@pkle.co.za
contact: +27 82 463 1127
PO Box 6060 Kirtlington, Hillcrest 3625
Durban South Africa

EMPLOYER:
eThekwini Municipality
CLEANSING & SOLID WASTE
DSW

MANAGER PLANT & DISPOSAL:

HEAD CLEANSING & SOLID WASTE:

PROJECT:
LOVU LANDFILL: CONSTRUCTION OF CELL 6 AND ANCILLARY WORKS

DRG. TITLE:
PLAN OF ANCILLARY WORKS & CONCRETE DETAILS

DRG PURPOSE:
FOR TENDER

DESIGN:
J PASS PrEng 890126 SIGN:
for Wilson & Pass Inc
DATE: 3 MAY 2023

DESIGN:	ETHEKWINI CONTRACT No:
J.PASS PrEng	WS 7638
ORIGINAL SCALE: AS SHOWN	DATE: MAY 2023
DWG.No.: WS 7638 - 08	REV.No.: AA