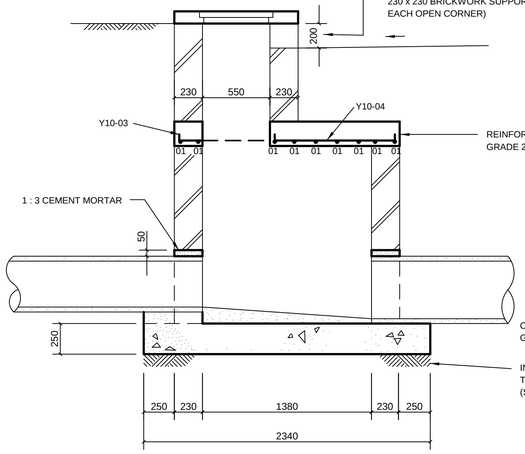

SECTION A - A

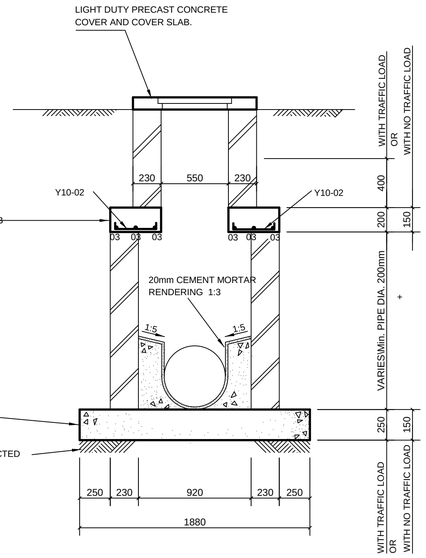

SECTION B - B

NOTE WHERE MANHOLE DEPTH IS LESS THAN 2.50m THE MANHOLE SHAFT IS TO BE 150mm AND THE HEIGHT OF CHAMBER IS TO VARY

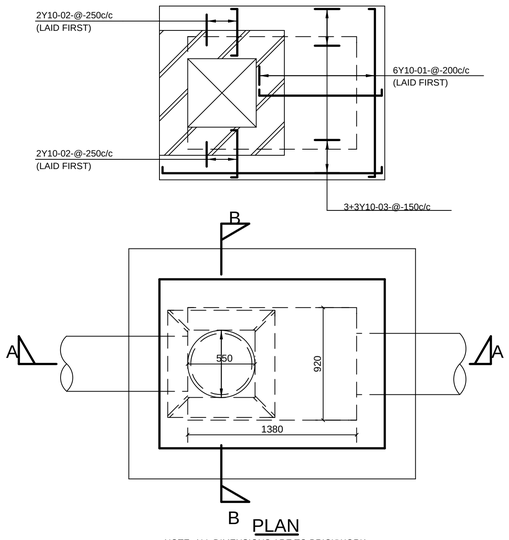

PLAN

NOTE ALL DIMENSIONS ARE TO BRICKWORK
i.e. PLASTERING IS EXCLUDED.

MANHOLE TYPE A (TOTAL MASS = 16.81 KG)

BARS	MARK	No.	LENGTH		TOTAL LENGTH
					11.60
Y10	01	8	1450	75 1300 01	2.00
Y10	02	4	500	89 330 03	2.00
Y10	03	6	500	75 1750 01	11.40
Y10	04	2	1150	89 980 01	2.30

MANHOLE TYPE B (TOTAL MASS = 36.36)

Y12	01	8	2250	75 2100 03	2.30
Y12	02	3	1000	80 840 01	3.00
Y12	03	7	2250	75 2100 01	15.75
Y12	04	6	700	75 550 01	4.20

NOTES :

1. STRUCTURAL CONC. TO CONSIST OF GRADE 25/26 WITH CUBE CRUSHING STRENGTH OF 25MPa AT 28 DAYS.
2. BLINDING TO CONSIST OF GRADE 15/26 WITH CUBE CRUSHING STRENGTH OF 15MPa AT 28 DAYS.
3. CLEAR COVER TO MAIN STEEL 40mm.
4. MORTAR TO CONSIST OF 1 CEMENT TO 3 SAND.

TYPE A (< 3m DEEP , PIPES < 900mm Ø)

SCALE 1:25

NOTES

IN SITU GROUND MUST BE COMPACTED TO 95 % MOD.AASHTO PRIOR TO MANHOLE BASE SLAB BEING CAST IF THE DENSITY CANNOT BE ATTAINED THE IN SITU MATERIAL MUST BE REMOVED TO A DEPTH OF 300mm AND REPLACED WITH A SELECTED BACKFILL.

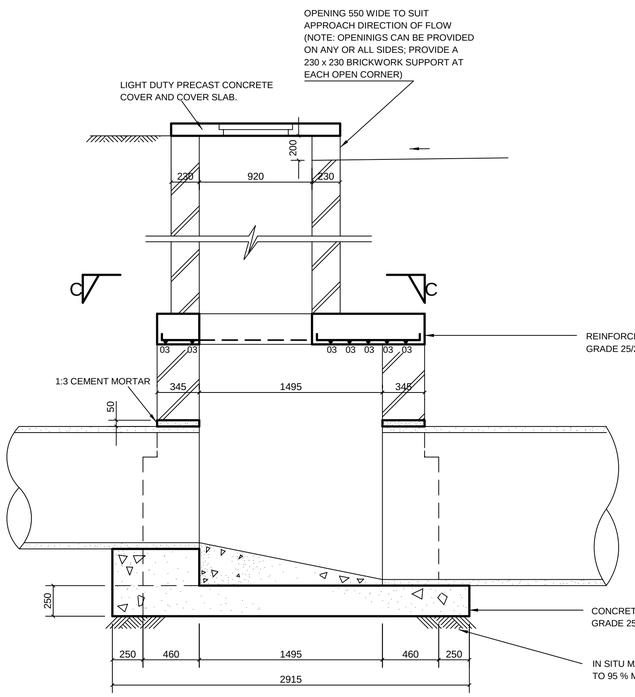

SECTION A - A

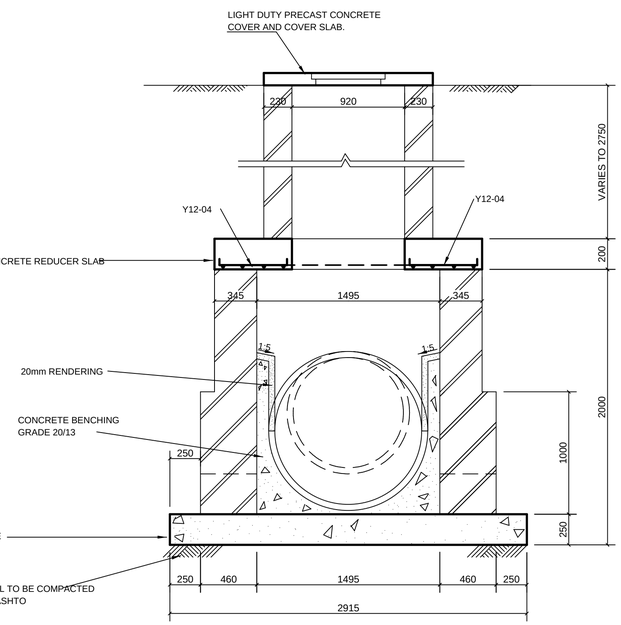

SECTION B - B

TYPE B (3 - 5m DEEP, PIPE < 900mm Ø & 0 - 5m DEEP & PIPE 900 - 1200mmØ)

SCALE 1:25

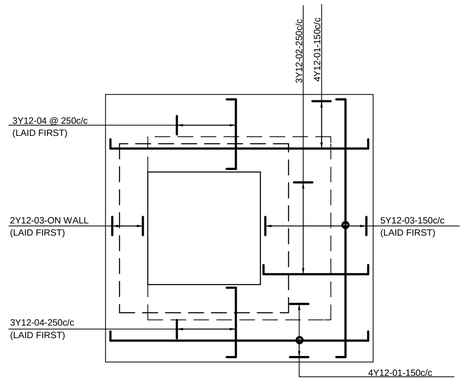

PLAN SHOWING REINFORCEMENT DETAILS

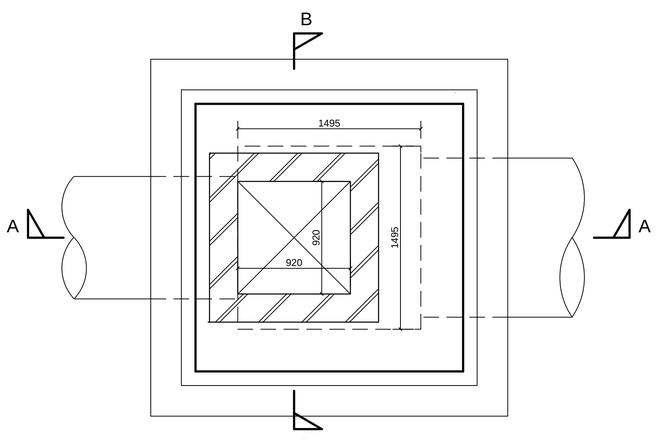

PLAN SECTION C - C

DRAWING REFERENCE

DRAWING NO.	TITLE

NOTES

NO.	AMENDMENT	APPROVED	DATE

REVISIONS

CLIENT

THEKWINI GEOCIVILS cc
Geotechnical & Civil Engineers
Waste Disposal Consultants Project Managers

1st FLOOR
68 Ridge Road
Tollgate
DURBAN
4001
Telephone 201-9929

P.O. Box 30072
MAYVILLE
4058
Telefax 201-8819

PROJECT

STANDARD DETAILS

TITLE

STORMWATER
BRICK MANHOLES

CONSULTING ENGINEER

SIGNATURE:.....

PR. NO.:.....

DATE:.....

DESIGNED :	G.P.
DRAWN :	K.M.
CHECKED :	G.P.
SCALE :	AS SHOWN
DATE :	06/11/2000

REFERENCE NO. TGC/03

SHEET 1 OF 1

REVISION

PDF created with FinePrint pdfFactory trial version http://www.pdffactory.com