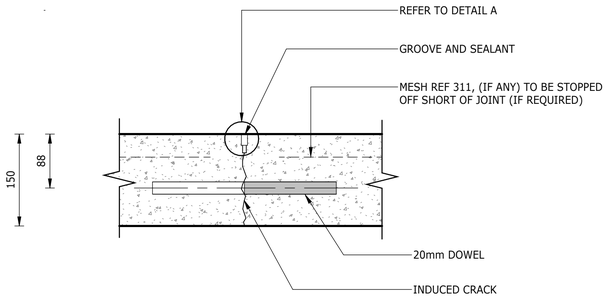

TAPERED PLATE DOWELED TRANSVERSE CONTRACTION JOINT

1 : 5

MATERIAL REQUIREMENTS										
LAYER No.	DESCRIPTION	THICKNESS mm	TRH14 MATERIAL TYPE	COLTO OF SPECIFICATION	COMPACTION (% OF MOD. AASHTO)	P.I. (MAX)	Min CBR AT % MOD. AASHTO	Min UCS (MPa) AT % MOD. AASHTO	Min ITS (kPa) AT % MOD. AASHTO	COMMENTS
1	CONCRETE PAVEMENT (35MPa), MESH TYPE 311	150	CP	7100	-	-	-	-	-	CONCRETE PROPERTIES AS REF SECTION 7103 OF COLTO SPECIFICATION
2	NATURAL GRAVEL LAYER (IMPORTED)	150	G5	3400	97	10	45 @ 95	-	-	
3	FILL LAYER	VARIES (MIN:150mm)	G7	3400	93	12	15 @ 93	-	-	
4	RIP AND RE-COMPACT EXISTING LAYER	150	MIN: G9	3400	93	12	7 @ 93	-	-	

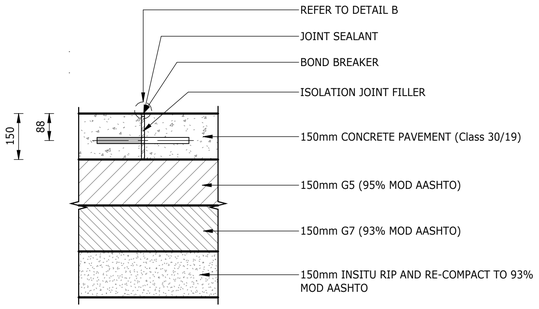

PAVEMENT DETAILS		
STEEL BASE TYPE	DIAMOND PLATE DOWEL	TAPERED PLATE DOWEL
SLAB THICKNESS (mm)	150	150
THICKNESS (mm)	20	15
L = LENGTH (mm)	115	300
S = SPACING (mm)	500	500

CONSTRUCTION JOINTS WITH DIAMOND PLATE DOWELS AND CONCRETE PAVEMENT LAYERWORKS

1 : 10

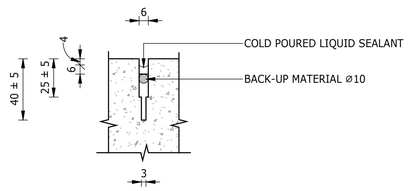

STAGE 1: CUT WIDTH + 3, CUT DEPTH = 60 ±5.

STAGE 2: CUT WIDTH + 6, CUT DEPTH = 35 ±5.

STAGE 3: CUTTING OF JOINTS TO WIDTHS 6mm or AS INSTRUCTED BY THE ENGINEER INSTALLATION OF JOINT PRIMER TO JOINT FACES INSTALLATION OF BACK-UP MATERIAL INSTALLATION OF LIQUID SEALANT.

DETAIL A: GROVE AND SEALANT

1 : 2

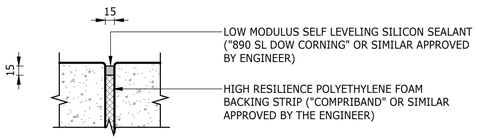

DETAIL B: ISOLATION JOINT

1 : 5

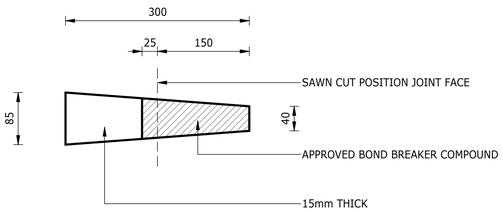

DETAIL C: TAPERED PLATE DOWEL

1 : 5

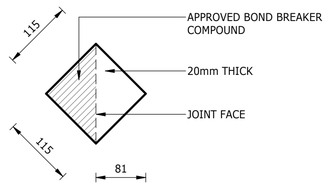

DETAIL D: DIAMOND PLATE DOWEL

1 : 5

DEPARTMENT	APPROVED	DESIGNATION	DATE

0 0,10m 0,50m 1,00m 2,00m
SCALE 1:10

0 0,10 0,50 1,00
SCALE 1:5

0 0,10m 0,2m 0,3m 0,4m
SCALE 1:2

CONSULTING ENGINEERS

Royal HaskoningDHV
Enhancing Society Together

Building No. 5 Country Club Estate
21 Woodlands Drive
Woodmead
2191
PO Box 867
Gallo Manor
2052
Tel No. +27 11 798 6000

SURVEYED	
DESIGNED	T. MOETI
DRAWN	N. O'GORMAN
CHECKED	L. NAICKER
SERVICES CHECKED	
GEOTECHNICAL INVESTIGATION	
SERVITUDES	
APPROVED	DITHOLO PHOGOLE
Pr. Eng.No.	20060098
DATE	25 February 2025

JOHANNESBURG WATER (SOC) LTD

Johannesburg Water

TURBINE HALL
65 NTEMI PILISO STREET
NEWTOWN
EGOLI 2001

TEL: (011) 688-1400
FAX: (011) 688-1529

CITY OF JOHANNESBURG

OLIFANTSVLEI WWTW: CONTRACT 1

INFRASTRUCTURE RENEWAL PLAN

TYPICAL PAVEMENT DETAILS

DESIGN MANAGER

DATE

SCALE

AS SHOWN

	AMENDMENTS	APPROVED	DATE
C01	ISSUED FOR TENDER	D. PHOGOLE	FEB 25

DRAWING No.

JW NUMBER
JW14466-RHD-C1-12-D-C-1201

CONSULTANT'S NUMBER
BW1400-RHD-C1-12-D-C-1201

FILE No

C01