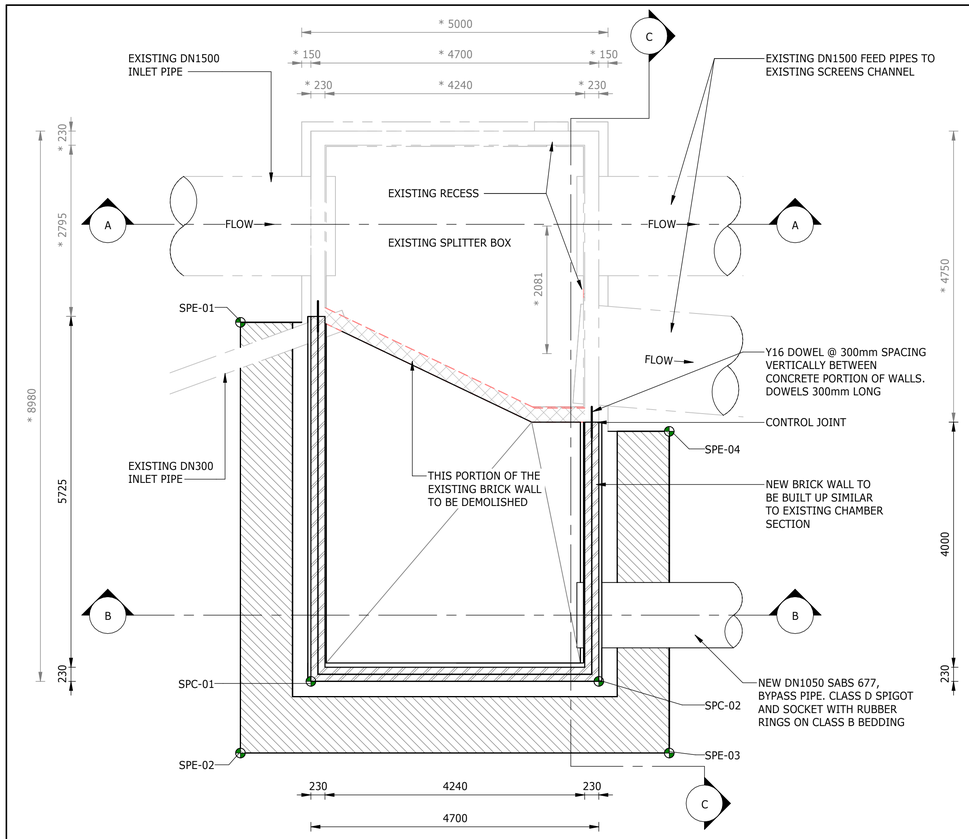

PLAN VIEW

1 : 50

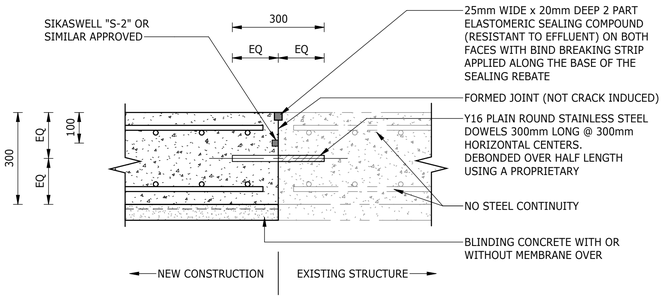

CONTROL JOINT: FORMED CONTRACTION JOINT

1 : 10

NOTES:

1. ALL DIMENSIONS AND LEVELS CONTAINING * ARE TO BE CONFIRMED ON SITE PRIOR TO COMMENCEMENT OF WORK. ANY DISCREPANCIES ARE TO BE REPORTED TO THE ENGINEER IMMEDIATELY.
2. BOTTOM OF BASE FOUNDATION TO BE INSPECTED FOR GROUND CONDITION BEFORE CONCRETE IS POURED.
3. EXISTING GROUND LEVELS TO BE RESTORED AFTER EXCAVATION AND BACKFILL.
4. EXCAVATION METHOD AND EXTENT TO ENSURE THAT THERE IS NO DAMAGE TO EXISTING INFRASTRUCTURE. AN EXCAVATION AND COMPACTION METHOD STATEMENT IS TO BE PROVIDED, FOR APPROVAL BY THE ENGINEER, PRIOR TO EXCAVATION.
5. SETTING-OUT POINTS ARE A GUIDE; FINAL EXCAVATION TO BE CONFIRMED ON SITE BY CONTRACTOR.

SPLITTER CHAMBER - SETTING OUT		
POINT	X	Y
SPLITTER - CONCRETE		
SPC-01	2913500.011	-89075.205
SPC-02	2913500.729	-89079.850

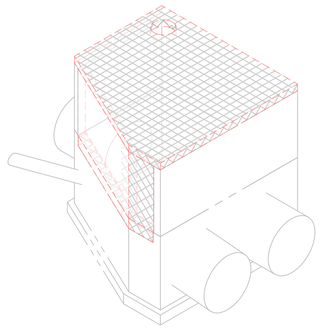

TYPICAL ISOMETRIC VIEW OF DEMOLITION WORK

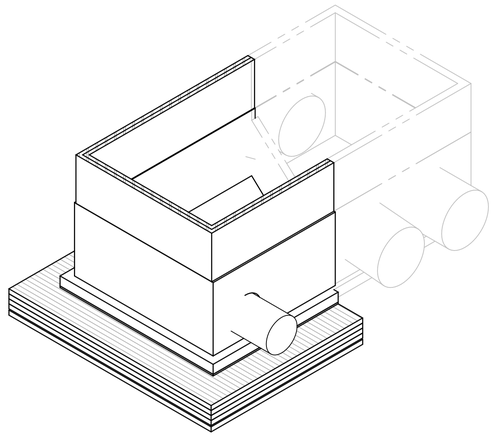

TYPICAL ISOMETRIC VIEW OF EXTENSION

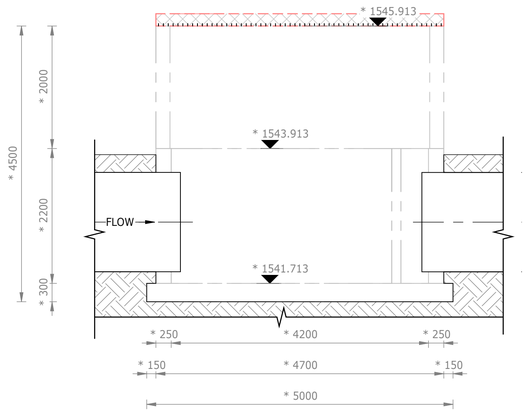

SECTION A-A

1 : 50

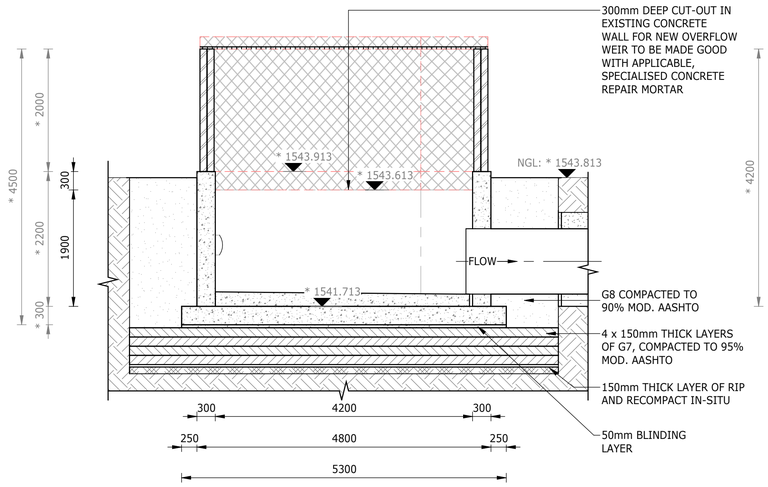

SECTION B-B

1 : 50

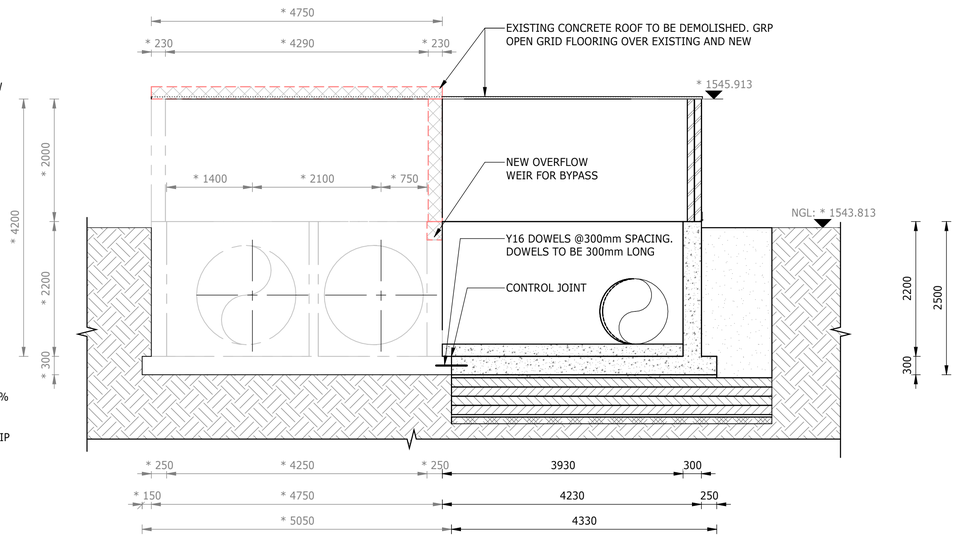

SECTION C-C

1 : 50

DEPARTMENT	APPROVED	DESIGNATION	DATE

0 1,00m 2,00m 3,00m 4,00m 5,00m 10,00m

SCALE 1:50

CONSULTING ENGINEERS

Royal HaskoningDHV
Enhancing Society Together

Building No. 5 Country Club Estate
21 Woodlands Drive
Woodmead
2191
PO Box 867
Gallo Manor
2052
Tel No. +27 11 798 6000

SURVEYED	
DESIGNED	L. NAICKER
DRAWN	N. O'GORMAN
CHECKED	L. NAICKER
SERVICES CHECKED	
GEOTECHNICAL INVESTIGATION	
SERVITUDES	
APPROVED	DITHOLO PHOGOLE
Pr. Eng.No.	20060098
DATE	25 February 2025

JOHANNESBURG WATER (SOC) LTD

Johannesburg Water

TURBINE HALL
65 NTEMI PILISO STREET
NEWTOWN
EGOLI 2001

TEL: (011) 688-1400
FAX: (011) 688-1529

CITY OF JOHANNESBURG

OLIFANTSVLEI WWTW: CONTRACT 1

INFRASTRUCTURE RENEWAL PLAN

VAN WYKSRUST PUMP STATION
EXISTING SPLITTER BOX EXTENSION
GENERAL ARRANGEMENT, SECTIONS & EARTHWORKS

DESIGN MANAGER

DATE

SCALE: AS SHOWN

	AMENDMENTS	APPROVED	DATE
C01	ISSUED FOR TENDER	D. PHOGOLE	FEB 25

DRAWING No.

JW NUMBER: JW14466-RHD-C1-03-D-C-0301

CONSULTANT'S NUMBER: BW1400-RHD-C1-03-D-C-0301

FILE No

C01