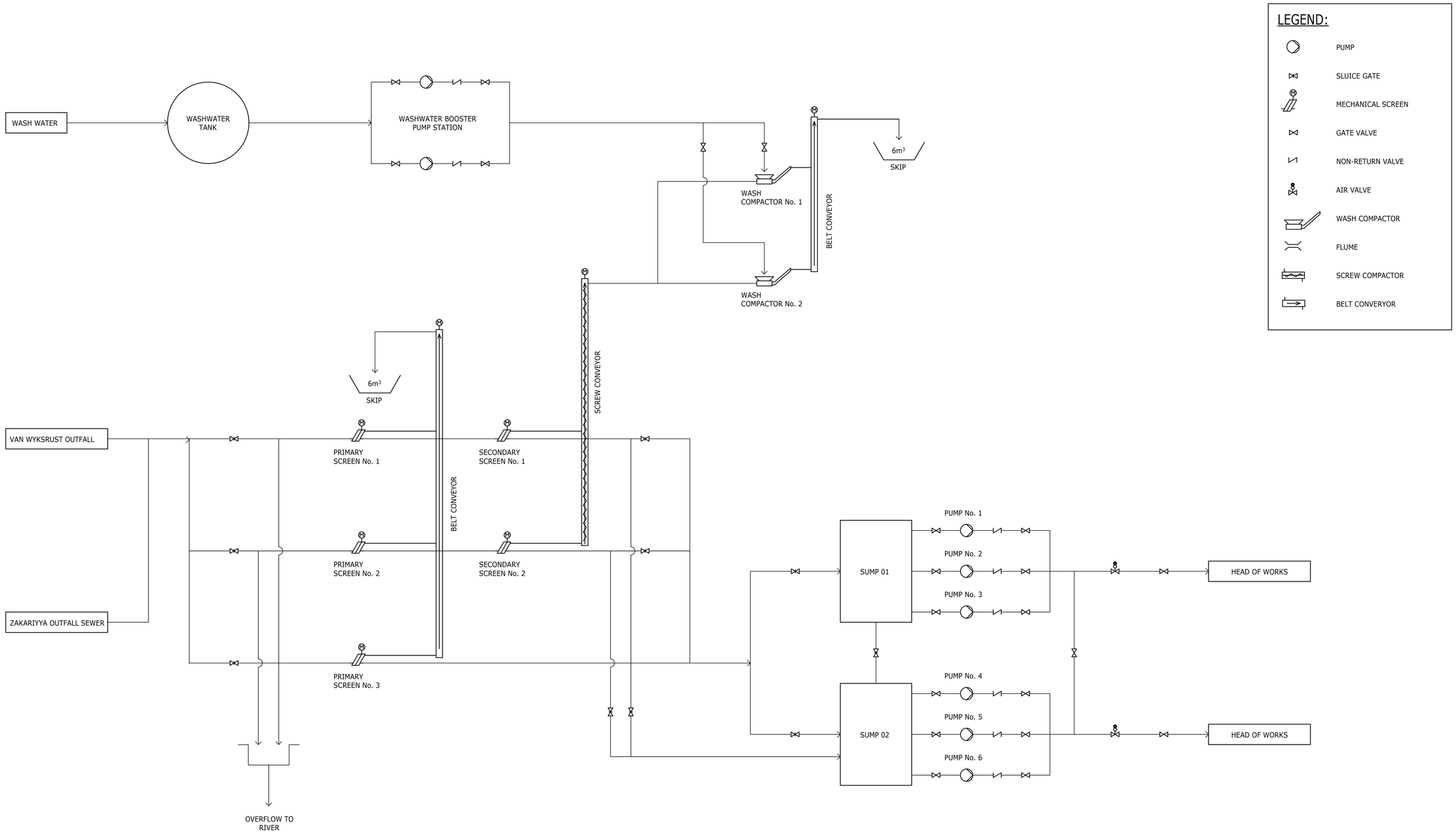

DEPARTMENT	APPROVED	DESIGNATION	DATE

CONSULTING ENGINEERS

Royal HaskoningDHV
Enhancing Society Together

Building No. 5 Country Club Estate
21 Woodlands Drive
Woodmead
2191
PO Box 867
Gallo Manor
2052
Tel No. +27 11 798 6000

SURVEYED	
DESIGNED	T. RAMASHAPA
DRAWN	N. O'GORMAN
CHECKED	E. NAIDOO
SERVICES CHECKED	
GEOTECHNICAL INVESTIGATION	
SERVITUDES	
APPROVED	DITHOLO PHOGOLE
Pr. Eng.No.	20060098
DATE	26 February 2025

JOHANNESBURG WATER (SOC) LTD

Johannesburg Water

TURBINE HALL
65 NTEMI PILISO STREET
NEWTOWN
EGOLI 2001

TEL: (011) 688-1400
FAX: (011) 688-1529

CITY OF JOHANNESBURG

OLIFANTSVLEI WWTW: CONTRACT 1

INFRASTRUCTURE RENEWAL PLAN

VAN WYKSRUST PUMP STATION
PROCESS FLOW DIAGRAM

DESIGN MANAGER

DATE

SCALE: AS SHOWN

	AMENDMENTS	APPROVED	DATE
C01	ISSUED FOR TENDER	D. PHOGOLE	FEB 25

DRAWING No.

JW NUMBER
JW14466-RHD-C1-02-D-M-0243

CONSULTANT'S NUMBER
BW1400-RHD-C1-02-D-M-0243

FILE No

C01