FOR UNTOLERANCED DIMENSIONS SEE ISO 2768-1: DESIGNATION M
FOR GENERAL TOLERANCE ON WELDED CONSTRUCTIONS SEE ISO 13920: CLASS A E

2D STATUS | IN WORK

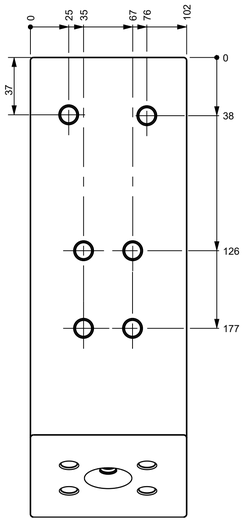

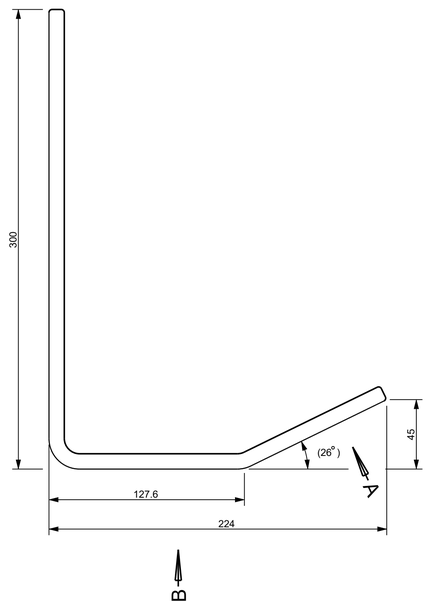

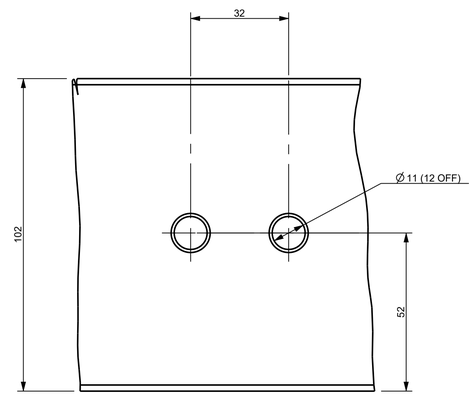

DETAIL B
SCALE 1:1

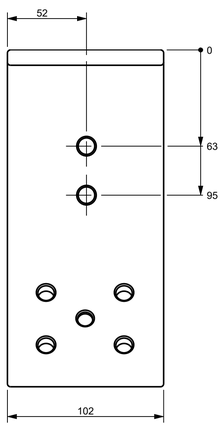

DIMENSION FROM ARROW B

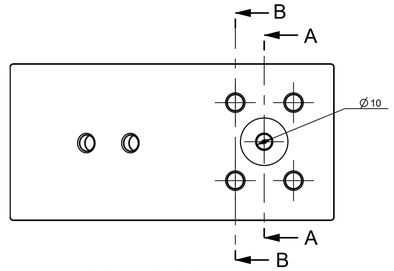

DIMENSION FROM ARROW A

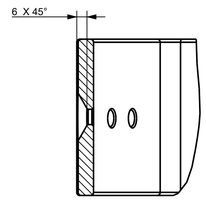

SECTION A-A

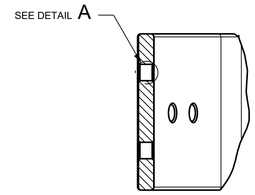

SECTION B-B

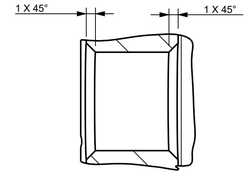

DETAIL A
SCALE 3:1

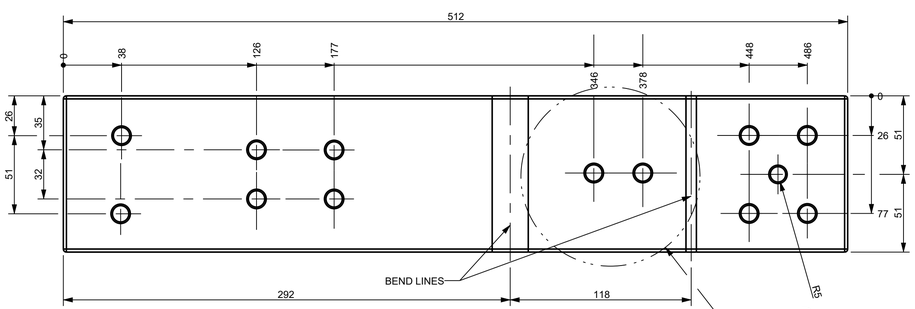

SCALE 1:2

DEVELOPED VIEW

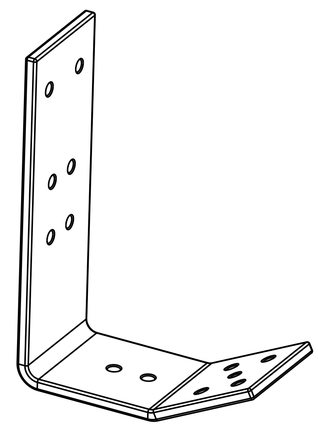

SCALE 2:5

NOTE:
-DRILL HOLES ON THE DEVELOPED VIEW AND ACCORDINGLY
-REMOVE ALL SHARP EDGES

ECN 000045

AMENDMENTS	
MASS	3.98 Kg

COPYRIGHT
THIS DRAWING TOGETHER WITH THE COPYRIGHT IS THE PROPERTY OF
TRANSNET
THIS DRAWING OR ANY PART THEREOF IS NOT TO BE COPIED OR OTHERWISE REPRODUCED OR USED FOR MANUFACTURE OR ANY OTHER PURPOSE WITHOUT THE WRITTEN PERMISSION FROM
CHIEF EXECUTIVE,
TRANSNET ENGINEERING

ASSEMBLY DRG No.	A3279-SW P1 REF:30	DRAWN	E.Z.Z.
		CHECKED	J.F.N..
CLASS	LOCOMOTIVE	APPROVED	B.E.D.
TYPE	GME	DATE	21/07/2023
		SCALE	1:2

A-1 PROJECTION

DOCUMENT REFERENCE No.

KILNER PARK LOCOMOTIVES

BUSBAR

SHEET 1 OF 1

MATERIAL
COPPER
Cu-ETP
PLATE 10
506 x 102

TRANSNET ENGINEERING

No. PELG176Z1189 REV. -