FLANGE INSULATING MATERIALS

ITEM	DESCRIPTION
1	PIPE : DIAMETER, WALL THICKNESS, STEEL GRADE, PROTECTION AND END PREPARATIONS TO BE AS SPECIFIED ELSEWHERE.
2	FLANGES : TO BE FULL FACED, MANUFACTURED AND DRILLED TO RAND WATER DRAWING A11791 Rev 3
3	ISOLATING GASKET: 3.2mm THICK COMPRESSED NON-ASBESTOS FIBRE (CNAF), MATERIAL SHALL BE A SPECIAL MIXTURE OF STRONG SYNTHETIC FIBRES AND INORGANIC FIBRES, ADDITIVES AND NITRILE RUBBER BINDERS. THE GASKETS SHALL COMPLY TO BS 7531 AND WATER REGULATIONS ADVISORY SCHEME (WRAS), WITH MINIMUM DIELECTRIC STRENGTH OF 120 VOLTS/METER AND GASKET SEATING OF 40N/mm² AT 20°C
4	'O'-RING : NATURAL RUBBER RING TO SANS 4633, REFER TO RAND WATER DRAWING A11791 Rev 3
5	INSULATING SLEEVE : 1 mm TO 1,5 mm THICK GLASS-FIBRE REINFORCED POLYESTER SLEEVE FOR EACH BOLT. LENGTH OF SLEEVE TO BE SUCH THAT TOTAL GAP ON SLEEVE LENGTH BETWEEN INSIDE FACES OF STEEL WASHERS IS BETWEEN 2 TO 3 mm.
6	INSULATING WASHER : 6,3 mm THICK FABRIC REINFORCED PHENOLIC RESIN WASHER WITH O.D. THE SAME AS THAT OF THE MACHINED STEEL WASHER, 2 OFF FOR EACH STUDBOLT : ID TO BE A SLIDING FIT OVER OD OF ITEM 5 .
7	STEEL WASHERS : MACHINED WITH DIAMETER AND THICKNESS TO SANS 1700-16 PART 1-5.
8	STUDBOLTS & STUDS : CLASS 8.8 AND NUTS CLASS 8.8 TO SANS 1700-5-1. STUDBOLT DIAMETERS SHALL BE SELECTED TO THE NEXT SMALLER SIZE FOR INSTALLATION IN STANDARD DRILLED FLANGES. STUD BODIES SHALL BE MACHINED DOWN TO THE NEXT STANDARD SMALLER SIZE AND SUITABLE SMALLER NUT TO BE USED.

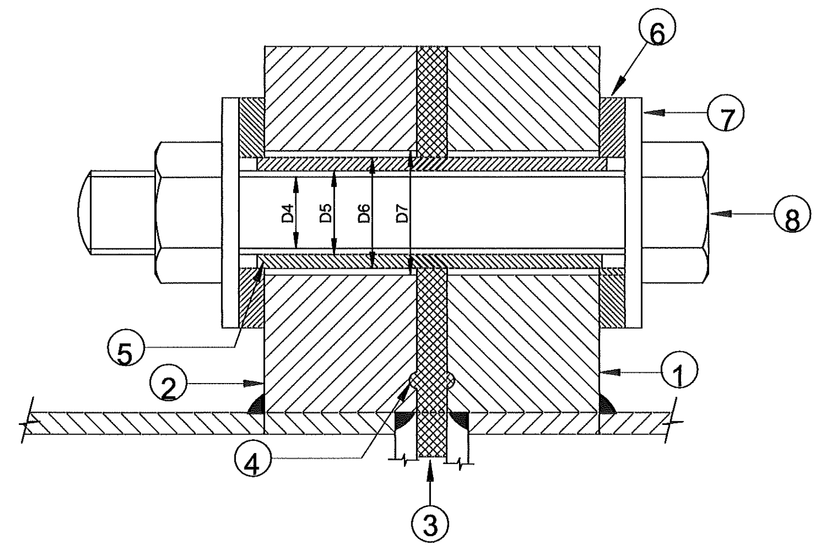

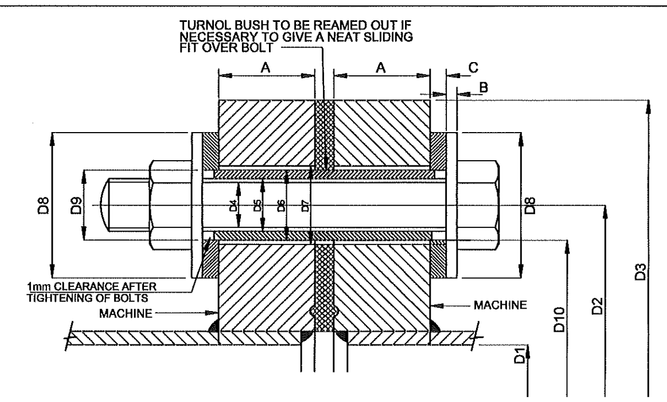

STANDARD DRILLING TABLES FOR FLANGES FOR TEST PRESSURES UP TO 1500kPa

NOMINAL INTERNAL DIA. OF PIPE, VALVE OR SPECIAL D1	EXTERNAL DIA. OF FLANGE D3	DIAMETER OF BOLT CIRCLE D2	NUMBER OF BOLTS	DIA. OF BOLTS D4	DIAMETER OF BOLT HOLES D7	I.D. OF TUFNOL D5	THICKNESS OF FLANGE (STEEL) A	OUTSIDE DIAMETER OF WASHERS D8	INSIDE DIAMETER OF WASHERS	THICKNESS OF WASHER B	OUTSIDE DIAMETER OF TUFNOL BUSHES D6	OUTSIDE DIAMETER OF TUFNOL BUSHES D8	INSIDE DIAMETER OF TUFNOL WASHERS D9	THICKNESS OF TUFNOL WASHERS C	OUTSIDE DIAMETER OF SPACER AND INSERTIONS D10
25	115	85	4	12	20	13	18	24	14	2.5	18	24	19	6	65
50	165	125	4	16	25	17	20	30	18	3	22	30	23	6	100
80	200	160	8	16	25	17	20	30	18	3	22	30	23	6	135
100	220	180	8	16	25	17	20	30	18	3	22	30	23	6	155
150	285	240	8	20	29	21	22	37	22	3	26	37	27	6	211
200	340	295	8	20	29	21	24	37	22	3	26	37	27	6	266
300	445	400	12	20	29	21	26	37	22	3	26	37	27	6	371
400	565	515	16	24	33	25	32	44	26	4	30	44	31	6	482
450	615	565	20	24	33	25	34	44	26	4	30	44	31	6	532
500	670	620	20	24	33	25	34	44	26	4	30	44	31	6	587
600	780	725	20	30	39	31	36	56	33	4	36	56	37	6	686
700	895	840	24	30	39	31	36	56	33	4	36	56	37	6	801
800	1015	950	24	30	39	31	44	56	33	4	36	56	37	6	911
900	1115	1050	28	30	39	31	44	56	33	4	36	56	37	6	1011
1000	1230	1160	28	36	47	38	50	66	39	5	44	66	45	6	1113

STANDARD DRILLING TABLES FOR FLANGES FOR TEST PRESSURES UP TO 3500kPa

NOMINAL INTERNAL DIA. OF PIPE, VALVE OR SPECIAL D1	EXTERNAL DIA. OF FLANGE D3	DIAMETER OF BOLT CIRCLE D2	NUMBER OF BOLTS	DIA. OF BOLTS D4	DIAMETER OF BOLT HOLES D7	I.D. OF TUFNOL D5	THICKNESS OF FLANGE (STEEL) A	OUTSIDE DIAMETER OF WASHERS D8	INSIDE DIAMETER OF WASHERS	THICKNESS OF WASHER B	OUTSIDE DIAMETER OF TUFNOL BUSHES D6	OUTSIDE DIAMETER OF TUFNOL BUSHES D8	INSIDE DIAMETER OF TUFNOL WASHERS D9	THICKNESS OF TUFNOL WASHERS C	OUTSIDE DIAMETER OF SPACER AND INSERTIONS D10
25	115	85	4	12	20	13	18	24	14	2.5	18	24	19	6	65
50	165	125	4	16	25	17	20	30	18	3	22	30	23	6	100
80	200	160	8	16	25	17	24	30	18	3	22	30	23	6	135
100	235	190	8	20	29	21	24	37	22	3	26	37	27	6	161
150	300	250	8	24	33	25	28	44	26	4	30	44	31	6	217
200	360	310	12	24	33	25	30	44	26	4	30	44	31	6	277
300	485	430	16	30	39	31	34	56	33	4	36	56	37	6	391
400	620	550	16	36	47	37	40	66	39	5	44	66	45	6	503
450	675	605	20	36	47	37	42	66	39	5	44	66	45	6	558
500	730	660	20	36	47	37	44	66	39	5	44	66	45	6	613
600	845	770	20	36	47	38	46	66	39	5	44	66	45	6	723
700	960	875	24	42	55	44	50	78	45	6	50	78	51	8	820
800	1085	990	24	48	59	50	54	92	52	10	56	92	57	12	931
900	1185	1090	28	48	59	50	58	92	52	10	56	92	57	12	1031
1000	1320	1210	28	56	69	58	62	105	62	10	66	105	67	12	1141

STANDARD DRILLING TABLES FOR FLANGES FOR TEST PRESSURES UP TO 7000kPa

NOMINAL INTERNAL DIA. OF PIPE, VALVE OR SPECIAL D1	EXTERNAL DIA. OF FLANGE D3	DIAMETER OF BOLT CIRCLE D2	NUMBER OF BOLTS	DIA. OF BOLTS D4	DIAMETER OF BOLT HOLES D7	I.D. OF TUFNOL D5	THICKNESS OF FLANGE (STEEL) A	OUTSIDE DIAMETER OF WASHERS D8	INSIDE DIAMETER OF WASHERS	THICKNESS OF WASHER B	OUTSIDE DIAMETER OF TUFNOL BUSHES D6	OUTSIDE DIAMETER OF TUFNOL BUSHES D8	INSIDE DIAMETER OF TUFNOL WASHERS D9	THICKNESS OF TUFNOL WASHERS C	OUTSIDE DIAMETER OF SPACER AND INSERTIONS D10
25	140	100	4	16	25	17	24	30	18	3	22	30	23	6	75
50	180	135	4	20	29	21	26	37	22	3	26	37	27	6	106
80	215	170	8	20	29	21	28	37	22	3	26	37	27	6	141
100	250	200	8	24	33	25	30	44	26	4	30	44	31	6	167
150	345	280	8	30	39	31	36	56	33	4	36	56	37	6	241
200	415	345	12	36	47	37	42	66	39	5	44	66	45	6	298
300	530	460	16	36	47	37	52	66	39	5	44	66	45	6	413
400	670	585	16	42	53	44	60	78	45	6	50	78	51	8	532
450	735	645	20	42	53	44	65	78	45	6	50	78	51	8	592
500	800	705	20	48	59	50	68	92	52	10	56	92	57	12	646
600	930	820	20	56	69	58	76	105	62	10	66	105	67	12	751
700	1045	935	24	56	69	58	84	105	62	10	66	105	67	12	866
800	1165	1050	24	56	69	58	92	105	62	10	66	105	67	12	981
900	1285	1170	28	56	69	58	98	105	62	10	66	105	67	12	1101
1000	1415	1290	28	64	81	66	108	115	70	10	78	115	79	12	1209

DRG No.A 9548

NOTES:

1.INSULATING JOINTS ARE TO BE HOUSED IN A WELL DRAINED AND VENTILATED CHAMBER WITH INSPECTION ACCESS.
2. FLANGES SHALL BE HYDRAULIC TESTED IN FACTORY TO 1,25 TIMES THE FLANGE CLASSIFICATION. THE TYPE 2 FLANGE SETS SHALL NOT LEAK AT FIELD TEST PRESSURE.
3. THE ASSEMBLED INSULATING JOINT SHALL BE TESTED AS FOLLOWS FOR ELECTRICAL DISCONTINUITY.
A) PLACE A FREE FLOATING COMPASS ON TOP OF THE INSULATING FLANGE. THE NEEDLE WILL ALIGN PARALLEL TO THE PIPELINE
I) BRIDGE THE TWO SIDES OF THE INSULATING JOINT WITH EITHER A 12 VOLT HEAVY DUTY CAR BATTERY OR WELDING GENERATOR. IF THE INSULATING FLANGE IS NOT FUNCTIONING THE COMPASS NEEDLE WILL DEFLECT TO A POSITION ORTHOGONAL TO PIPELINE. IF THE INSULATION JOINT IS FUNCTIONING CORRECTLY, THE NEEDLE WILL DEFLECT 5 TO 7 DEGREES AND THE MAXIMUM CURRENT FLOWING ACROSS THE JOINT SHOULD NOT EXCEED 50 AMPS.
II) SHOULD A FAULTY INSULATING JOINT BE LOCATED THEN THE FAULTY MATERIALS SHALL BE REPLACED AND THE JOINT SYSTEM RE-TESTED.
III) IT IS RECOMMENDED THAT EACH BOLT BE TESTED FOR NON-CONTINUITY BEFORE TIGHTENING THEREOF. THE SAME MUST APPLY WHEN A JOINT IS TESTED AND FOUND TO BE CONTINUOUS. THE FAULTY BOLTS MUST BE NOTED.
B) THE FINAL DEFLECTED POSITION OF THE COMPASS NEEDLE TO BE NOTED, ie. THE STABILIZED POSITION AND NOT THE INITIAL MOVEMENTS
4. FLANGE MACHINING AND FINISHES TO RAND WATER DRG A11791
5. THE MATING FLANGES SHALL BE DRILLED IN PAIRS AND MARKED.
6. WHERE MATING FLANGES ARE TO BE WELDED ON SITE, THE FLANGES SHALL BE BOLTED UP WITH AT LEAST 3 FITTED BOLTS AND ALLIGNED PROPERLY BEFORE WELDING.
7. INSPECTION OF INSULATING JOINTS : AFTER INSTALLATION, THE INSULATING JOINTS MUST BE INSPECTED TO ENSURE THEIR COMPLIANCE WITH THE SPECIFICATIONS AND DRAWINGS AND THEIR EFFICIENCY TESTED FOR SATISFACTORY ELECTRICAL INSULATION (PARAGRAPH 3 ABOVE). THE INSPECTION SHALL BE WITNESSED BY THE ENGINEER OR ENGINEER'S REPRESENTATIVE, THE DESIGNER OF THE CATHODIC PROTECTION INSTALLATION AND THE CONTRACTOR.
8. INSULATING SLEEVES : THE MAXIMUM GAP WIDTH BETWEEN INSIDE FACES OF STEEL WASHER AND ENDS OF INSULATING SLEEVE TO BE BETWEEN 2 TO 3 mm AT ANY END BEFORE TIGHTENING. A 1 mm GAP MAY BE LEFT BETWEEN THE SLEEVE END AND THE STEEL FLANGE WHERE STUDS ARE REQUIRED AT VALVE CONNECTIONS.

REVISION CHECKED BY

NAME	DESIGNATION	SIGNATURE	DATE
MOLLY SKALE	CME		04/02/2015
ISHRO MUSTAFA	S-PT		08/01/2015
DIANA KATSKY	S.C.T		04/08/15
Thulani Madonsela	M&LP		05-08-15
C. Mosmeu	SME		05/08/15

REVISIONS

No	DATE	CHECKED	DESCRIPTION	REV
A9548	04-03-93	01/07/93	DESIGN DRAWING	0
A9548	02-04-12	06-06-12	STD DRAWING	1
A9548			STD DRG WITH-DIMENSIONS	2

NUMBER	TITLE
A11791 REV3	STD FLANGE DIMENSION

REFERENCE DRAWINGS

RAND WATER
BOX 1127
JOHANNESBURG
2000
TEL: 011-682-0911

© RAND WATER 2011 All Rights Reserved

SAP No.		CHECKED	
CONTRACT No.		SECTION HEAD	
ORIGINATOR	T.MADONSELA	APPROVED	Pr. Eng
DRAWN BY	L.MALINDI	CAPACITY	Mech. Assets Manager
DATE	23/04/15	DATE	11 August 2015

STANDARDS

INSULATION FLANGE

STATION	WKS	DOC. TYPE	S
DRW	B11	CMX	A

SCALE-NTS

DRG No. A 9548

REVISION 2