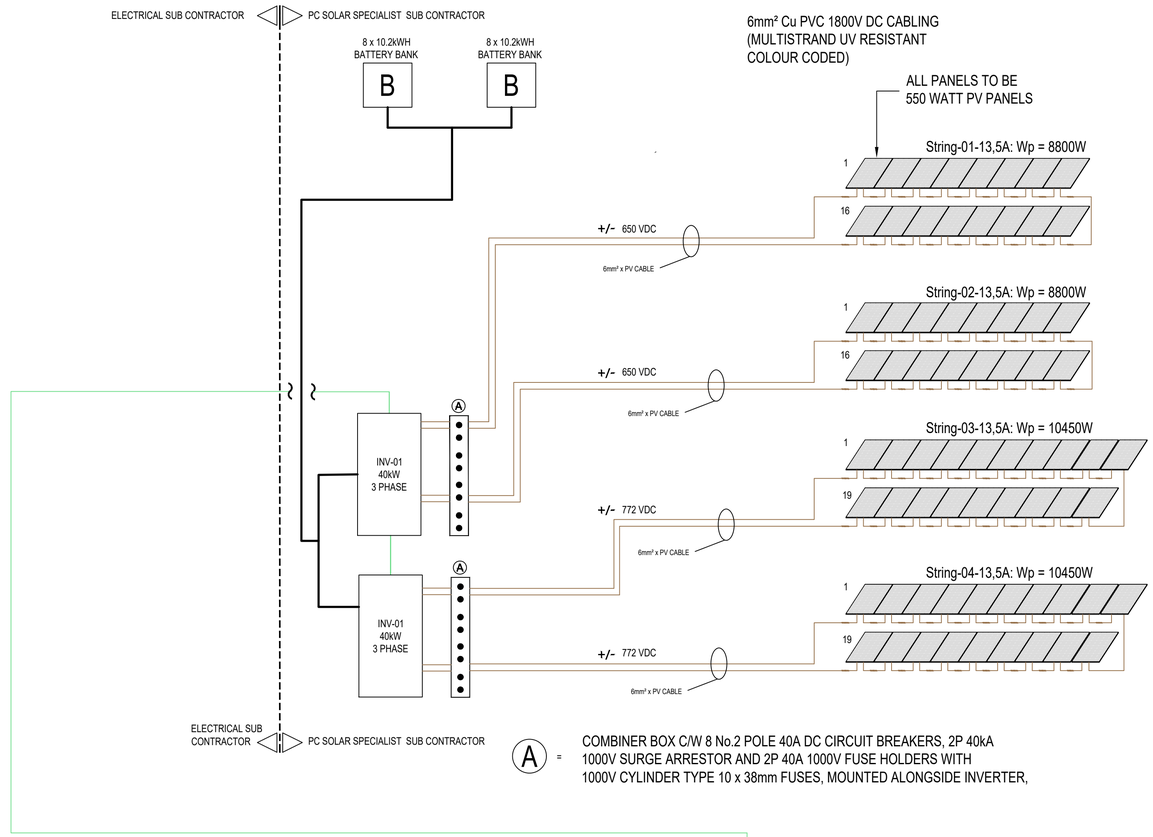


SENIOR ENGINEER APPROVAL

NAME.....

SIGNED.....

DATE.....

| DATE | DESCRIPTION | BY | ENG |
|---|---|---|---|
| 10-10-24 | UPDATES PER ENG | TA | BL |
| 05-08-24 | UPDATES PER ENG | TA | BL |

| | | |
|---|---|---|
| DESIGNED | **Bothata Lenka Pr Eng** | 19-02-2024 |
| DRAWN | T. A. A. | 26-03-2024 |
| CHECKED | B. LENKA (PrEng) | |
| APPROVED | B. LENKA (PrEng) | |

CONSULTING ENGINEER:

Ningi CONSULTING ENGINEERS cc.

Consulting and Pro(Ject Management by Professionals
Civil, Structural, Electrical & Mechanical

CK 2004/102833/23

PRETORIA/KATLEHONG OFFICE:
4 Bardeleth Road
Pasadena
Pretoria/Kwaggasrand
Tel: (012) 356-2001
Fax to Email: (086) 662 0709
Email : info@ningicc.co.za

CLIENT:

artek ZI ARCHITECTS

PROJECT:

PROPOSED NTSHONGWE POLICE STATION

DRAWING TITLE:
SINGLE LINE DIAGRAM
MAIN LV PANEL & CHANGE OVER PANEL
ELECTRICAL INSTALLATION

| | | |
|---|---|---|
| SCALE: N.T.S. | SHEET NO. 1 OF 7 | A1 |
| CONTRACT NO: | PROJECT No: 23003 | |

DRAWING No: NCE-23003-EE-SL-01

REV 2

STATUS:
FOR INFORMATION