LEGEND:

1. The shower cubicle that was constructed using brickwork and tiles must be demolished
   The entire shower cubicle must be removed and both floor and walls have to be made good.

2. Portions of existing floor tiles have been corroded (by acid) and some tiles are broken.
   Break out damaged floor tiles and damaged existing screeds, clean out and leave for item 4 to be done.

3. Build bunt walls,(4 off) dimensions as shown but confirm on site. Use brick on edge and plaster to create a
   threshold of approximately 125 mm high or normal brick-on-edge plus stretcher bond to create
   a threshold of approx. 200 high.(Refer detail below).

4. Screed to fall towards outlet. (outlet by as per detail).
   Screed to be constructed as follow:
   Clean and strip floor of old paint and debrish.
   Expose existing NCI tiles and make entire surface rough where applicable as per suppliers requirement to ensure new concrete screed will adhere to the existing tiles using a 'wet-to-dry" epoxy all as per manufacturer's specification.
   Install a 25 MPa concrete screed,12 mm aggregate, laid to fall as per details.
   The top finish of the screed shall be smooth, steel trowel or 'power floated'.
   After the concrete screed has cured and dried out sufficiently, (approximately 3 weeks),apply a 5 to 6 mm thick layer of "**Two-compound, solvent free high chemical resistant clear resin system"** an example is "abecote sf 217" or similar approved (light amber or light grey in colour), all in strict accordance with the manufacturer's specifications. Contractor shall issue worksheets of proposed material to the engineers.

5. Clean and prepare to recieve the same epoxy paint finish as the rest of the battery room floor, without the screed to fall.

6. Skirting:
   Prepare the walls to recieve a 75 mm high epoxy painted skirting to match that of the floor. Ensure that there are NO gaps or any possibility of leaking between the floor screeds and the skirting before applying the skirting. Joint between floor and wall might require filling/sealing before applying epoxy skirting paint. Contractor to confirm on site.

7. **NOTE:** the strucural/civil engineer has to perform inspections and provide written approvals to proceed before the following above mentioned items are performed:
   - Before the floor screeds are constructed
   - Before the epoxy floor paint coverings are installed
   - After all has been constructed and after the site has been cleaned, before handing over to client. Payment will only be affected after final inspection and approval by engineer.

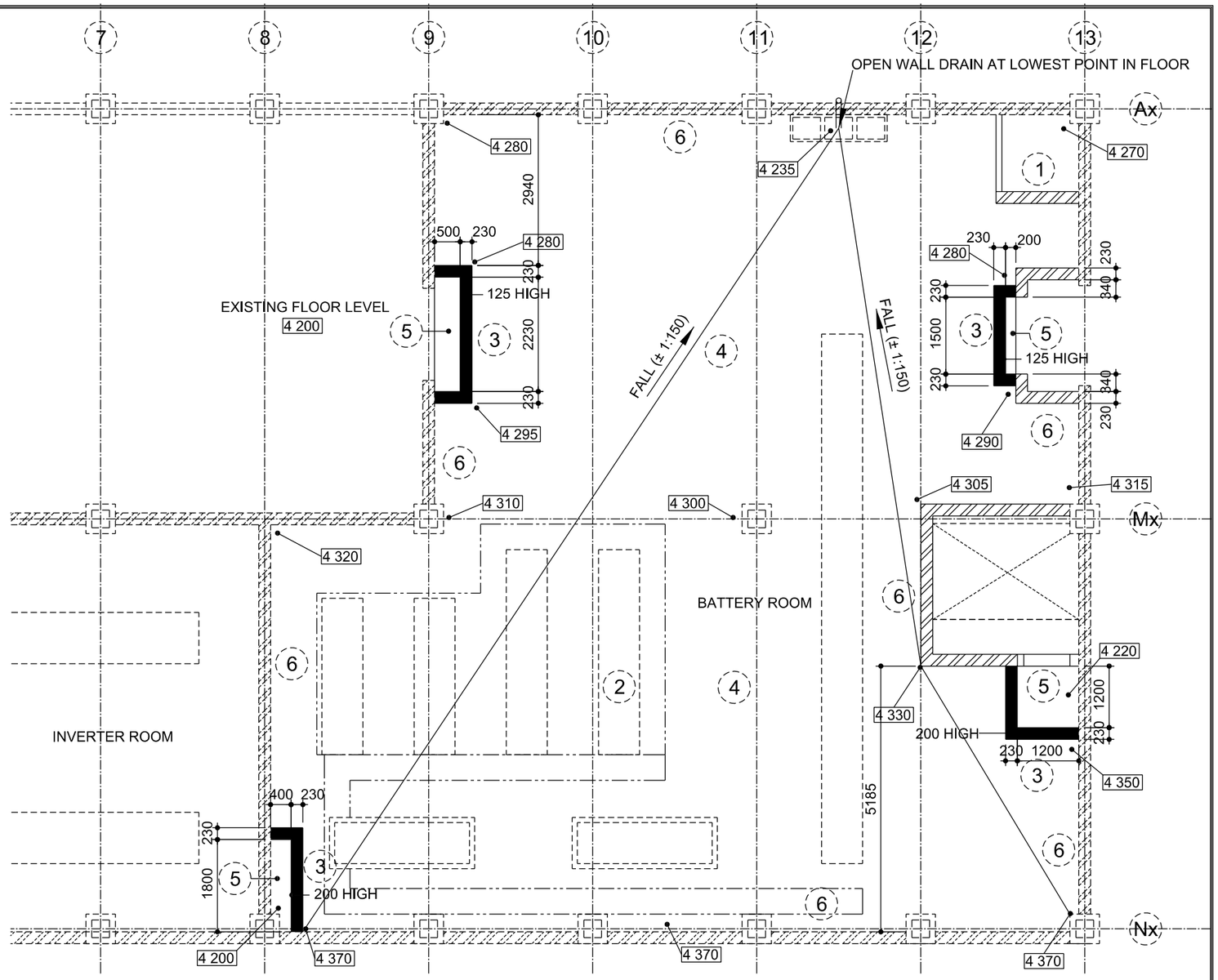

BATTERY ROOM LAYOUT-UNIT 5

SCALE 1 : 100

NOTE: CONTRACTOR TO CONFIRM ALL DIMENSIONS ON SITE.
CONTRACTOR TO SUPPLY OWN VENTILATION SYSTEM FOR THE DURATION OF THE INSTALLATION OF THE EPOXY FLOOR.

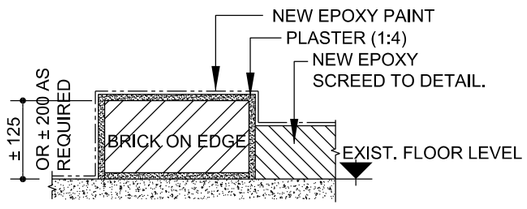

TYPICAL SECTION THRU' BUNT WALLS

SCALE 1 : 10

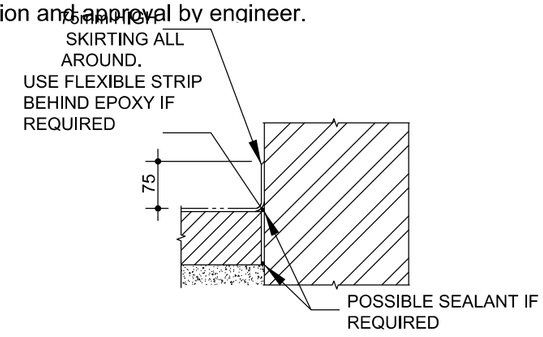

SKIRTING DETAIL

SCALE 1 : 10

ESKOM DRG NO: 0.45/54912

DLV Engineers (Pty) Ltd.
CONSULTING STRUCTURAL- ELECTRICAL- MECHANICAL- & CIVIL ENGINEERS
151 Amos Street
Colbyn, Pretoria 0083
☎(012) 342-5300
www.dlvafrica.co.za
✉11665
Hatfield 0028, RSA
086 686 4667 (RSA)
+27 (0) 12 349 9433 (INT)
Reg No. 2000/011270/07

Project Title: ESCOM **KRIEL POWER STATION**

Drawing Title: UNIT CONTROL BLOCK 5 BATTERY ROOM UPGRADING

Service Title: STRUCTURAL

No	Date	Description	By
C0	18/07/2008	ISSUED FOR CONSTRUCTION	HDP

Revisions

Copyright reserved by DLV Engineers (Pty) Ltd

Drawing Number: 07051-BR-005
Revision No.: C0
Scale: AS SHOWN
Designed: JJW
Drawn: HDP
Date: AUG 2008
Checked: JJW
100mm On original drawing A3