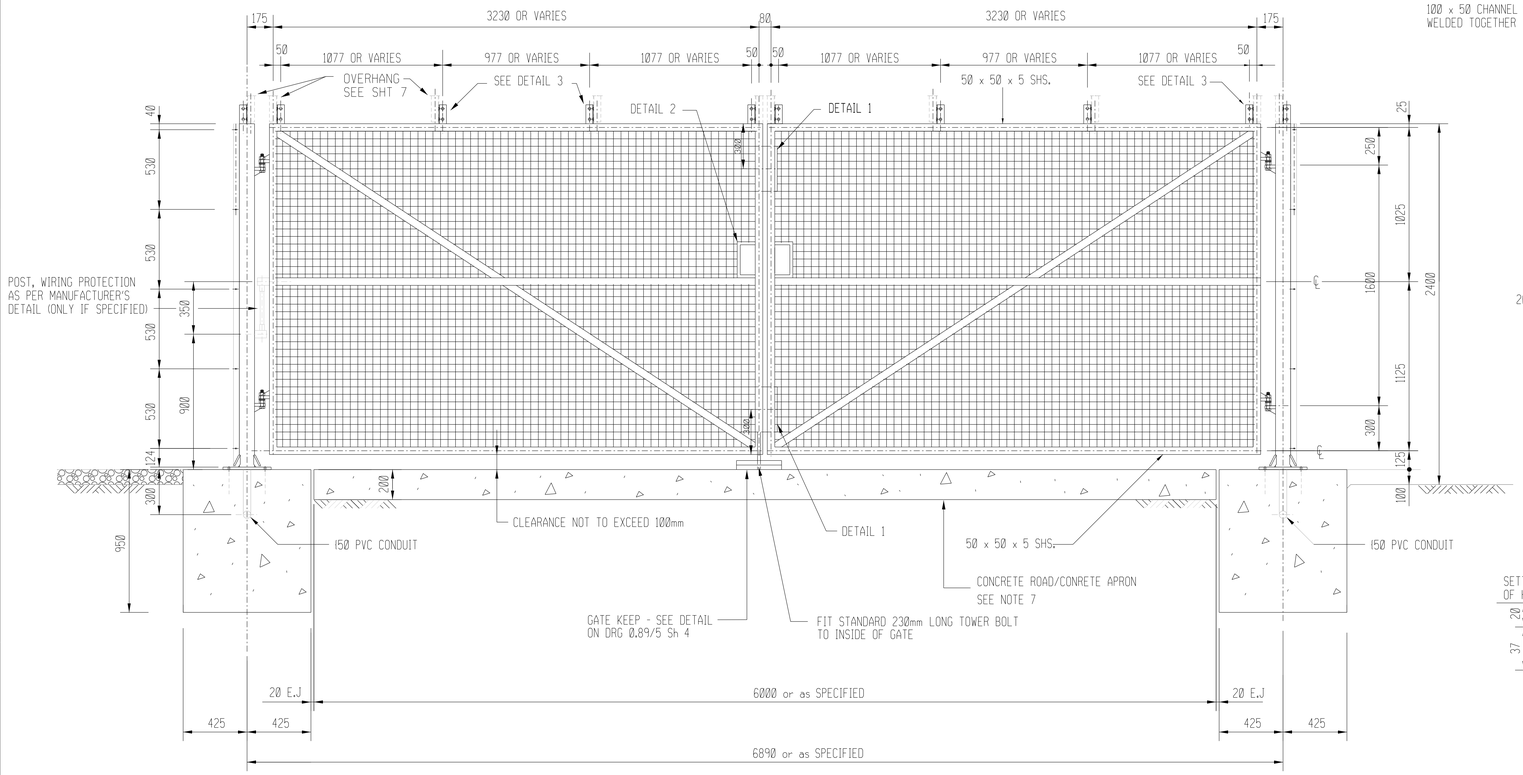

ELEVATION ON BARRIER GATE

1:20

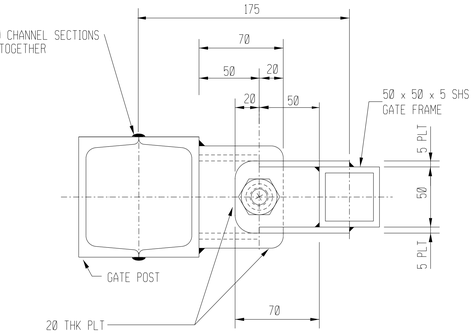

PLAN ON GATE HINGE

1:2.5

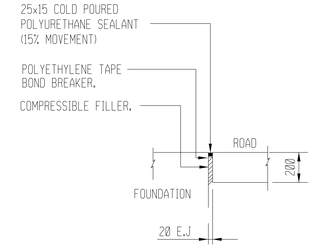

EXPANSION JOINT DETAIL

(BETWEEN FOUND. & CONCRETE ROAD)

N.T.S

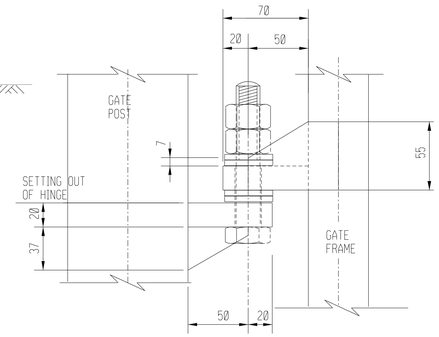

SIDE ELEVATION - GATE HINGE

1:2.5

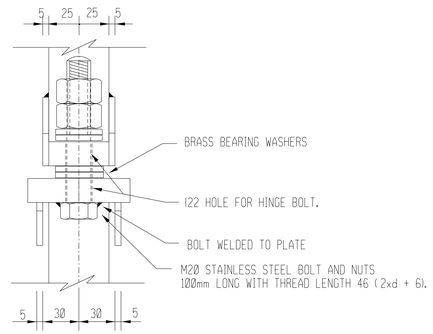

FRONT ELEVATION - GATE HINGE

1:2.5

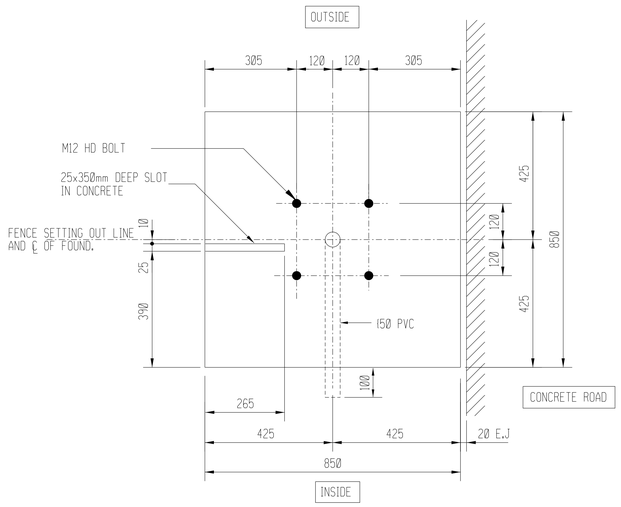

PLAN ON GATE POST FOUNDATION

1:10

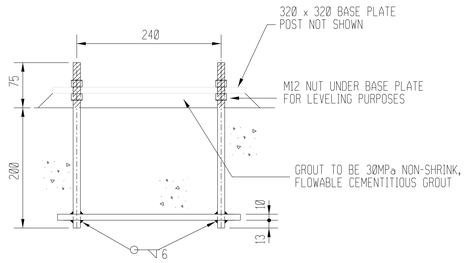

ELEVATION ON H.D BOLTS

1:5

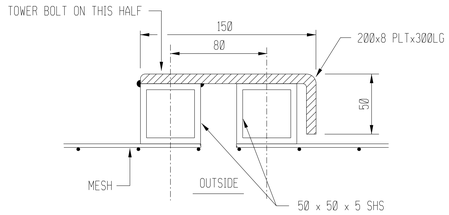

DETAIL 1

1:2.5

NOTES

1. THIS DRAWING IS TO BE READ IN CONJUNCTION WITH ALL REVELANT SECURITY FENCE DRAWINGS.
2. COMPLETE GATE AND ALL STEEL TO BE HOT DIPPED GALVANISED TO SANS 121 16mm DRAINHOLES AT 300mm CENTRES TO BE DRILLED TO BOTTOM OF ALL GATES BEFORE GALVANISING.
3. ALL STEEL TO BE GRADE 300WA.
4. FENCE CONTRACTOR TO SUPPLY ALL GALVANISED NUTS, BOLTS, WASHERS etc. REQUIRED.
5. ALL WELDING TO BE 5mm CONTINIOUS FILLET AND CARRIED OUT IN THE WORKSHOP BEFORE GALVANISING.
6. GATE CLADDING TO BE 50x50x3,15mm MESH FULLY GALVANISED CLASS 'A' SECURED TO FRAME WITH STAINLESS STEEL STRAPPING EVERY 150mm.
7. IF GATE IS ERECTED AT A SUBSTATION THE CONCRETE ROAD TO EXTEND MIN 2,0m PAST THE GATE AT SITES WITH A GRAVEL ROAD A CONCRETE SLAB BETWEEN GATE POSTS AND APRON/RAMP TO MATCH ROAD TO BE CONSTRUCTED, CLEARANCE NOT TO EXCEED 100mm

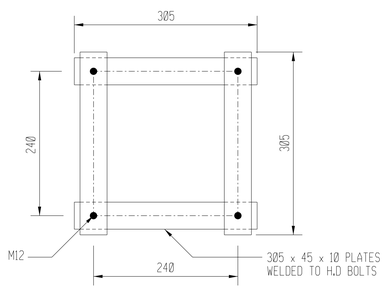

PLAN ON H.D BOLTS

4 H.D BOLTS PER FOUNDATION
TO BE SUPPLIED BY FENCE CONTRACTOR
8 BOLTS & 8 WASHERS PER SET
WEIGHT OF SET = 4,5kg

1:5

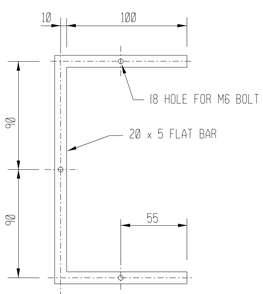

2 REQUIRED FOR EACH GATE LEAVE TO CLAMP FENCE - OPENING REQUIRED FOR CHAIN AND PADLOCK

DETAIL 2

1:2.5

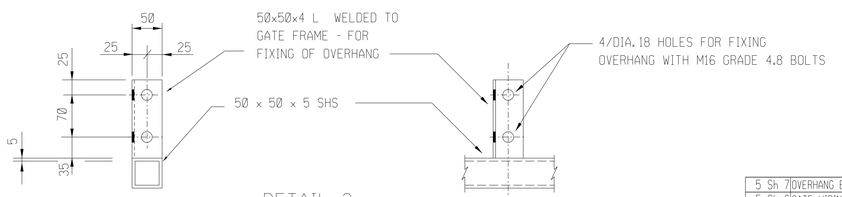

DETAIL 3

1:25

5 Sh 7	OVERHANG BRACKET DETAILS
5 Sh 6	GATE WIRING PROTECT DTL
5 Sh 5	WELDMESH FIXING DTLS
5 Sh 4	POST CONCRETE BASES
5 Sh 3	POST AND STRUTS DTLS
5 Sh 2	GATE POST DETAILS
0·89	REFERENCE DRAWINGS

D.O.	REV	DATE		REV BY	CHKD BY	AUTH BY	KKS APP
00	0		FIRST ISSUE				
			•• REVISION ••				
			INDEX REFERENCE :				

DRG REGISTR

APPROVED BY : 13 02 07

AUTHORISED BY :

KKS APP

AUTH BY

CHKD BY

ESKOM HOLDINGS LTD.
REG. No.
2002/015527/06

DRAWN BY 13 02 07 M.S.V

SCALE AS SHOWN

Eskom

2,4m HIGH SECURITY FENCE WITH OVERHANG
ACCESS GATE
PLAN, ELEVATIONS AND DETAILS

0·89/5

SHEET 1

REV 00

THIS DRAWING HAS BEEN CREATED ON A C.A.D. SYSTEM.
ANY AMENDMENT MUST BE EFFECTED ON THE SAME SYSTEM.

SIZE GROOTTE A1L