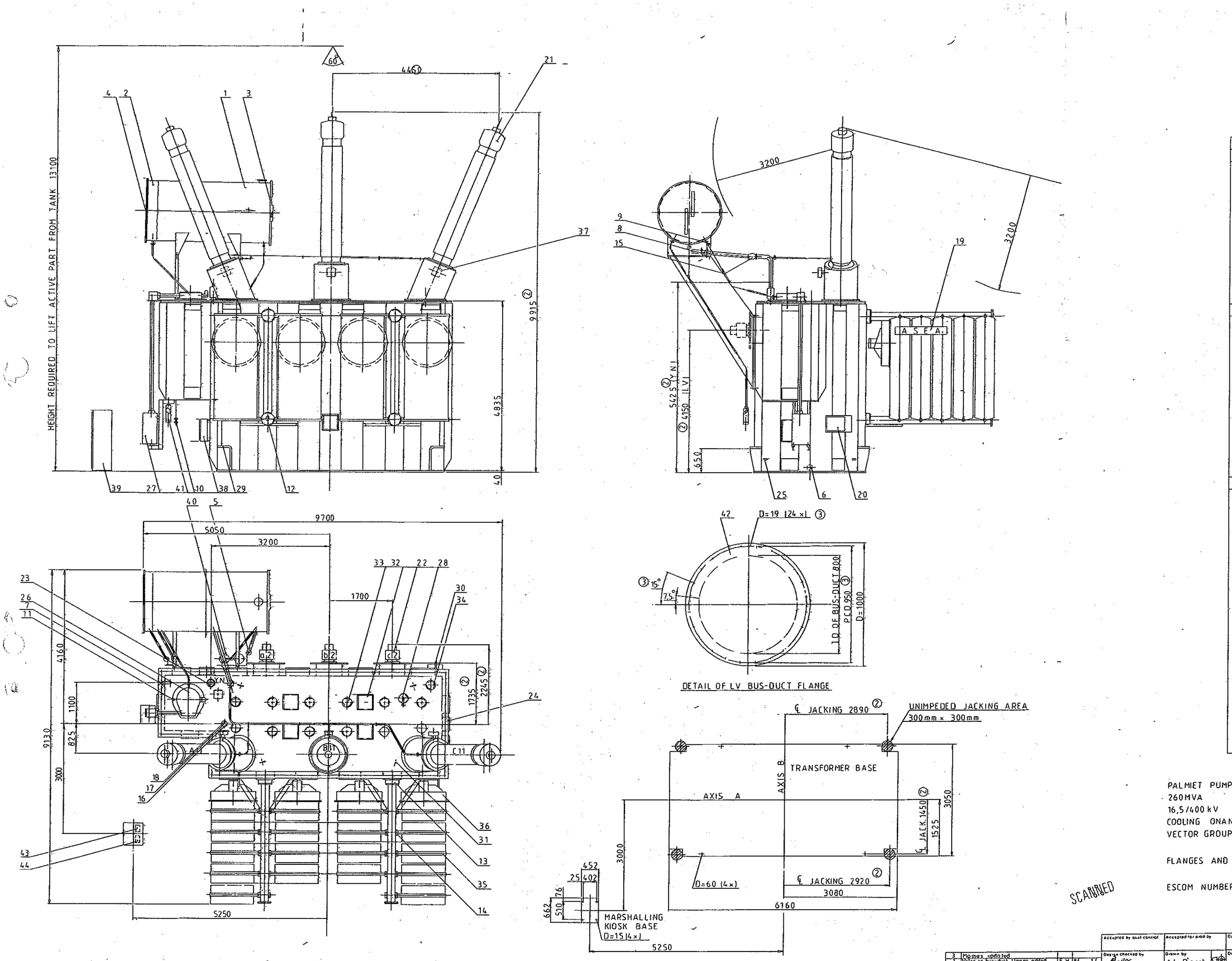

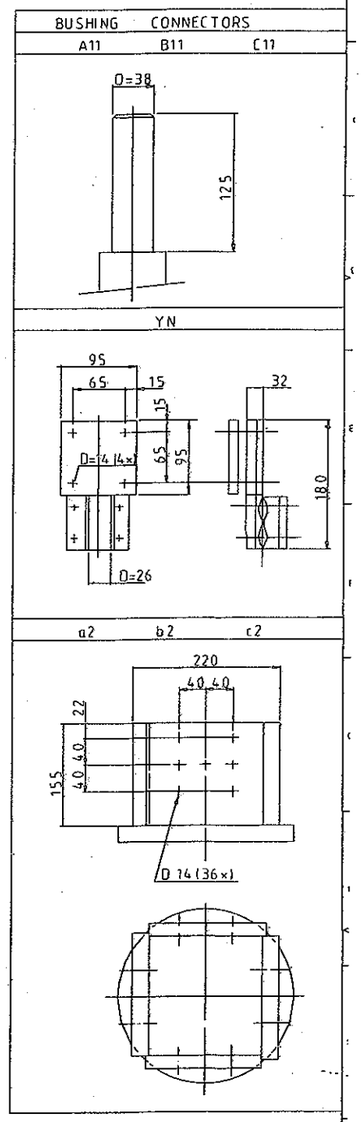

PALMIET PUMPED STORAGE
260MVA
16,5/400 kV
COOLING ONAN/ONAF
VECTOR GROUP YNd1

FLANGES AND VALVES DRILLED TO BS 4504 1969

ESCOM NUMBER 0.48/21903 rev 3

Palmiet 14-7-71

SCANNED

3	Masses updated			
3	Holes on bus-duct flange added	E H	86	14
2	Dims 2920, 1450, 2890, 9130, 1735, 2245, 5425, 4150, 9915, were 2875, 1325, 2795, 9070, 1660, 2170, 5170, 3840, 9715	L D	86	06
1	MARSH KIOSK REPOSITIONED	L D	85	40

Accepted by qual control
Accepted for prod by
Design checked by
Drawing checked by
Drawn by AL D'arch
Iss by Dept TTM Year 85 Week 32
Description (English) OUTLINE DRAWING
Description (own language)
PR4713 8153
Revised
Sheet 1
Cont 2