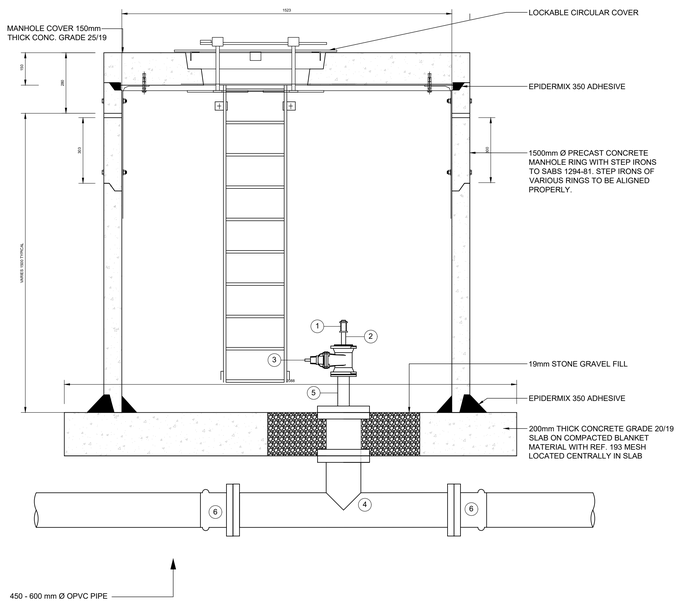

AIR VALVE
SCALE 1:10

GENERAL NOTES

1. Do not scale this drawing. Work to figure by dimensions, only. Any discrepancies to be brought to the Engineers attention prior to implementation of any work.
2. Minimum concrete cube strength @ 28 days for blinding layer is to be 15MPA minimum concrete cube strength @ 28 days for walls, floor slabs, roof slabs, columns, foundations and external non-water retaining structure is to be 30MPA.
3. Concrete cover specifications are to be in accordance with the contract document design specifications.
4. Minimum cover to reinforcing all concrete members 25mm top & bottom.
   PWJ - partial wall vertical joint
   PFJ - partial floor joint
5. Engineer to inspect all reinforcement prior to casting concrete.
6. 20x20mm chamfer on all exposed concrete edges unless otherwise noted.
7. All steel flanges to S.A.B.S. 1123/77 table 1000/3 unless otherwise indicated.
8. Brick work:
   - All exposed external brickwork satin red facebrick.
   - All internal brickwork to be clay commons, plastered and painted acrylic pva white.
   - Outer face of internal brickwork skin to be bagged and bitumen painted.
   - Brickforce at windowsill level and wall plate level all around building.
   - N.B : 4 coarse brickforce above windows and doors.
   - DPC at floor and windowsill levels.
9. Plaster:
   - Cement plaster 12mm thick to internal vertical brick walls.
10. Painting:
   - Prepare and apply two coats bitumen paint on brick skin including working around wire ties.
   - Prepare and apply one coat plaster primer and two coats approved pva acrylic paint to internal walls, fibre cement fascia and barge board.
   - Clean with spirits of salts solution and apply two coats silicone-based brick dressing in strict accordance with the manufacturer's instructions to external face brick walling.
   - Prepare and apply one coat plaster primer and one coat universal undercoat and one coat approved eggshell enamel paint on fibre cement sills.
   - Etch and apply one coat zinc primer, one undercoat and two finishing coats approved universal gloss enamel paint on steel sashes, frames, and burglar bars.
   - Prepare, stop and apply two coats approved varnish on hardwood doors and frames.
   - prepare, knot prime stop, and apply one coat pink wood primer, one undercoat and two coats approved universal eggshell enamel paint on general surfaces of eaves timbers.
11. All steel pipe specials to be rilsan lined and coated to specifications.
12. All buried steel pipework & bolted connections to be 'denso' wrapped to specifications.
13. All puddle pipes to be tape wrapped to specifications.
14. All bolts & nuts to be hot dip galvanised, unless otherwise indicated.
15. All construction activities shall be executed to the Engineer's approval.
16. Setting out & final positioning of all steel pipework, including puddle pipes, to be confirmed by contractor on site, prior to fabrication and installation.

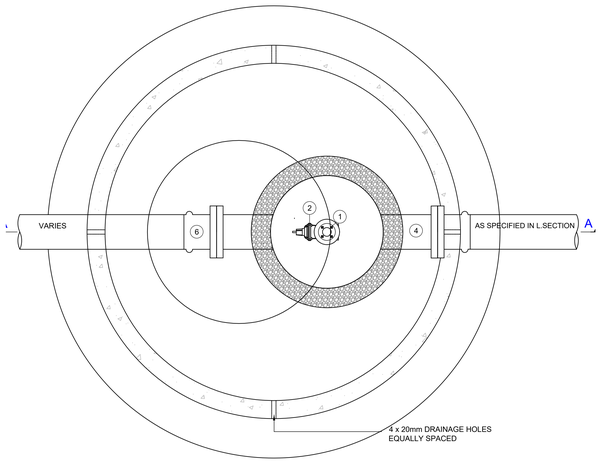

AIR VALVE CHAMBER LAYOUT PLAN
SCALE 1:10

MANHOLE PLAN FOUNDATION
SCALE 1:10

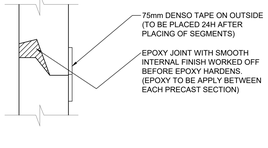

MANHOLE JOINT DETAIL
SCALE 1:20

ITEM NO	Dia (ND)	DESCRIPTION
1	25-150	AIR VALVE "VENT-O-MAT" RBX TYPE OR SIMILAR APPROVED
2	25-150	GMS STRAIGHT, THREADED BOTH ENDS TO SUIT TEE FLANGE AND AIR VALVE FLANGE TYPICAL LENGHT 200mm, CONFIRM LENGTH ON SITE
3	25-150	RSV GATE VALVE - REFER LONG SECTION
4	160 - 200	EQUAL STEEL TEE, ALL ENDS FLANGED - TO SUIT CONNECTING PIPE
5	160 - 200	GMS STRAIGHT, FLANGED BOTH ENDS TO SUIT TEE FLANGE AND RSV VALVE FLANGE, TYPICAL LENGHT 300mm, CONFIRM LENGTH ON SITE
6	160 - 200	2 X FLANGE ADAPTOR TO SUIT CONNECTING PIPEWORK

1. SIZE AND TYPE OF AIR VALVE IN ACCORDANCE WITH DETAILS SHOWN ON LONG SECTIONS AND LAYOUT DRAWING
2. DIAMETER OF CONNECTING PIPE WORK AND FITTINGS TO SUIT SIZE OF AIR VALVE.
3. FLANGE SIZES AND DRILLING PATTERNS TO BE AS SPECIFIED IN LONG SECTION OR MATCH THE PIPE CLASS.

NOTES:

1. ALL DIMENSIONS IN MILLIMETERS
2. CONCRETE TO BE CLASS 20/19 UNLESS OTHERWISE SPECIFIED
3. COVER TO REINFORCEMENT TO BE 40mm
4. AIR VALVE TO BE POSITIONED MIN OF 300mm FROM COVER SLAB
5. FLANGE SIZES AND DRILLING PATTERNS TO BE AS SPECIFIED IN LONG SECTION OR MATCH THE PIPE CLASS.
6. ALL THREADS TO BSP STANDARDS
7. ALL BURIED FITTINGS AND HINGES TO BE WRAPPED IN "DENSO MASTIC BLANKET" TAPE.
8. ALL STEEL COMPONENTS INCLUDING BOLTS GALVANIZED TO ISO 1461 : 2000
9. ENGINEER TO BE CONSULTED IN RESPECT OF APPROPRIATENESS OF DESIGN FOR PIPE PRESSURE OVER CLASS 16
10. ALL WELDS TO BE FULL PENETRATION TO BS 534 AND FILLET WELD TO BE 80% OF WALL THICKNESS OR WITH A MINIMUM OF 5mm

AIR VALVE DETAIL

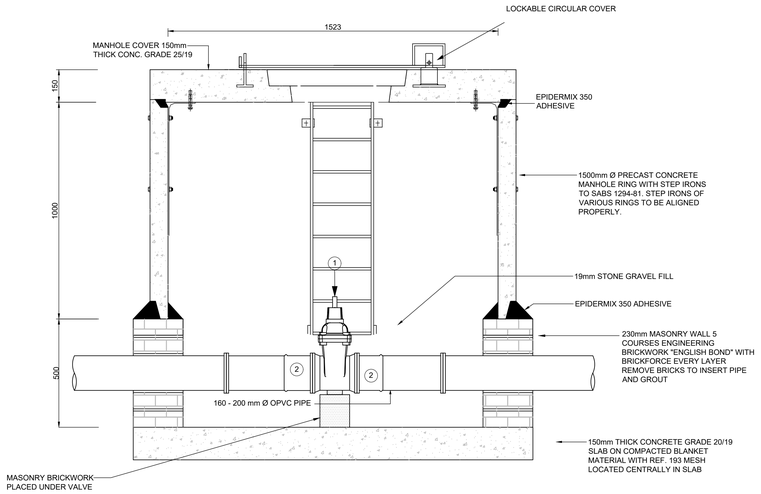

ISOLATION VALVE
SCALE 1:10

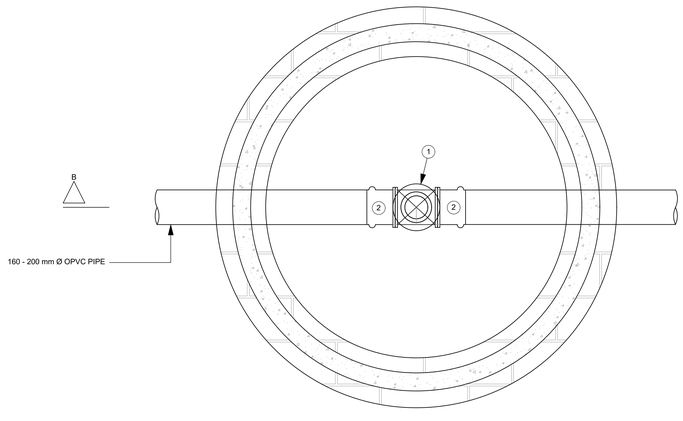

MANHOLE PLAN FOUNDATION
SCALE 1:10

FITTINGS SCHEDULE FOR PIPES

ITEM No.	DIA.	DESCRIPTION	No. OFF
1	160 - 200	RSV GATE VALVE - REFER LONG SECTION	1
2	160 - 200	2 X FLANGE ADAPTOR TO SUIT CONNECTING PIPEWORK	1

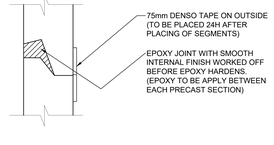

MANHOLE JOINT DETAIL

ISOLATION VALVE DETAIL

FOR TENDER

GENERAL NOTES

1. Do not scale this drawing. Work to figure by dimensions, only. Any discrepancies to be brought to the Engineers attention prior to implementation of any work.
2. Minimum concrete cube strength @ 28 days for blinding layer is to be 15MPA minimum concrete cube strength @ 28 days for walls, floor slabs, roof slabs, columns, foundations and external non-water retaining structure is to be 30MPA.
3. Concrete cover specifications are to be in accordance with the contract document design specifications.
4. Minimum cover to reinforcing all concrete members 25mm top & bottom.
   PWJ - partial wall vertical joint
   PFJ - partial floor joint
5. Engineer to inspect all reinforcement prior to casting concrete.
6. 20x20mm chamfer on all exposed concrete edges unless otherwise noted.
7. All steel flanges to S.A.B.S. 1123/77 table 1000/3 unless otherwise indicated.
8. Brick work:
   - All exposed external brickwork satin red facebrick.
   - All internal brickwork to be clay commons, plastered and painted acrylic pva white.
   - Outer face of internal brickwork skin to be bagged and bitumen painted.
   - Brickforce at windowsill level and wall plate level all around building.
   - N.B : 4 coarse brickforce above windows and doors.
   - DPC at floor and windowsill levels.
9. Plaster:
   - Cement plaster 12mm thick to internal vertical brick walls.
10. Painting:
   - Prepare and apply two coats bitumen paint on brick skin including working around wire ties.
   - Prepare and apply one coat plaster primer and two coats approved pva acrylic paint to internal walls, fibre cement fascia and barge board.
   - Clean with spirits of salts solution and apply two coats silicone-based brick dressing in strict accordance with the manufacturer's instructions to external face brick walling.
   - Prepare and apply one coat plaster primer and one coat universal undercoat and one coat approved eggshell enamel paint on fibre cement sills.
   - Etch and apply one coat zinc primer, one undercoat and two finishing coats approved universal gloss enamel paint on steel sashes, frames, and burglar bars.
   - Prepare, stop and apply two coats approved varnish on hardwood doors and frames.
   - prepare, knot prime stop, and apply one coat pink wood primer, one undercoat and two coats approved universal eggshell enamel paint on general surfaces of eaves timbers.
11. All steel pipe specials to be rilsan lined and coated to specifications.
12. All buried steel pipework & bolted connections to be 'denso' wrapped to specifications.
13. All puddle pipes to be tape wrapped to specifications.
14. All bolts & nuts to be hot dip galvanised, unless otherwise indicated.
15. All construction activities shall be executed to the Engineer's approval.
16. Setting out & final positioning of all steel pipework, including puddle pipes, to be confirmed by contractor on site, prior to fabrication and installation.

FUNDER:

water & sanitation
Department: Water and Sanitation
REPUBLIC OF SOUTH AFRICA

DEPARTMENT OF WATER AND SANITATION

Physical Address : 195 Francis Baard Street, Pretoria, 0001, South Africa
Postal Address : private Bag X313, Pretoria, 0001, South Africa

CLIENT:

NKANGALA DISTRICT MUNICIPALITY

Physical Address : 2A Walter Sisula Street, Middelburg, 1050
Telephone Number : (013) 249 2000

CLIENT:

dr.jsmlm
DR JS Moroka Local Municipality

Dr JS Moroka Local Municipality

Physical Address : A26010 Bongimfundo Street, Siyabuswa
Postal Address : private Bag X4012
Tel: (013) 973 1101
Email: info@moroka.gov.za

ENGINEER:

KUFANIKIWA CONSULTING

Physical Address : 11 Derby Place, Derby Downs Office park, Westville
Telephone Number : (031) 701 1038
Facsimile Number : (031) 701 0963
E-mail Address : www.kufanikiwa.co.za
Website Link or Address : info@kufanikiwa.co.za

DRAWING REVISIONS

REV	DATE	DRAWN	CHECKED	DESCRIPTION

PROJECT NAME:

WESTERN HIGHVELD BULK WATER SCHEME

DRAWING TITLE:

DETAILS - AIR VALVE AND ISOLATION VALVE FROM DN160 TO DN200

RESPONSIBLE PERSONNEL.		SIGNATURE	DATE
DESIGNED	A. SHANGASE		
DRAWN	A. SHANGASE		
CHECKED	CHECKED		
APPROVED	APPROVED		
SCALE	**AS SHOWN**		

APPROVED ; CLIENT

SIGNATURE DATE

PROJECT NUMBER	DRAWING NUMBER		
VU-WTR-21-006	401		
STAGE	SHEET SIZE	SHEET No.	REVISION
TENDER	A0	1 OF 1	0

COPYRIGHT RESERVED