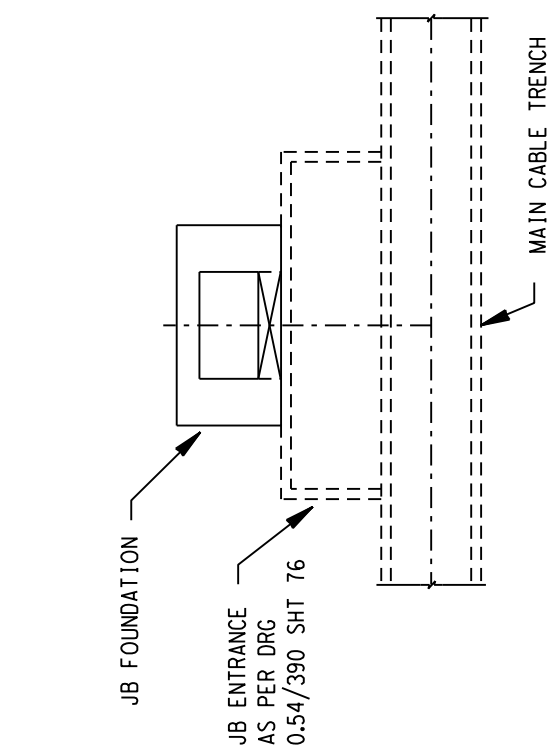

LAYOUT

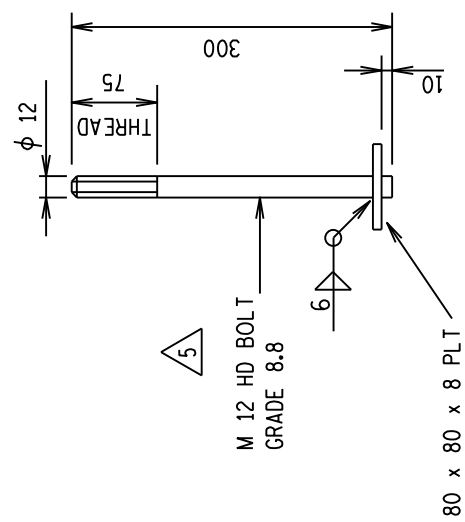

H.D. BOLT DETAIL - 4 OFF

MASS OF ONE H.D. BOLT
COMPLETE WITH NUT
& WASHER = 0,7 kg

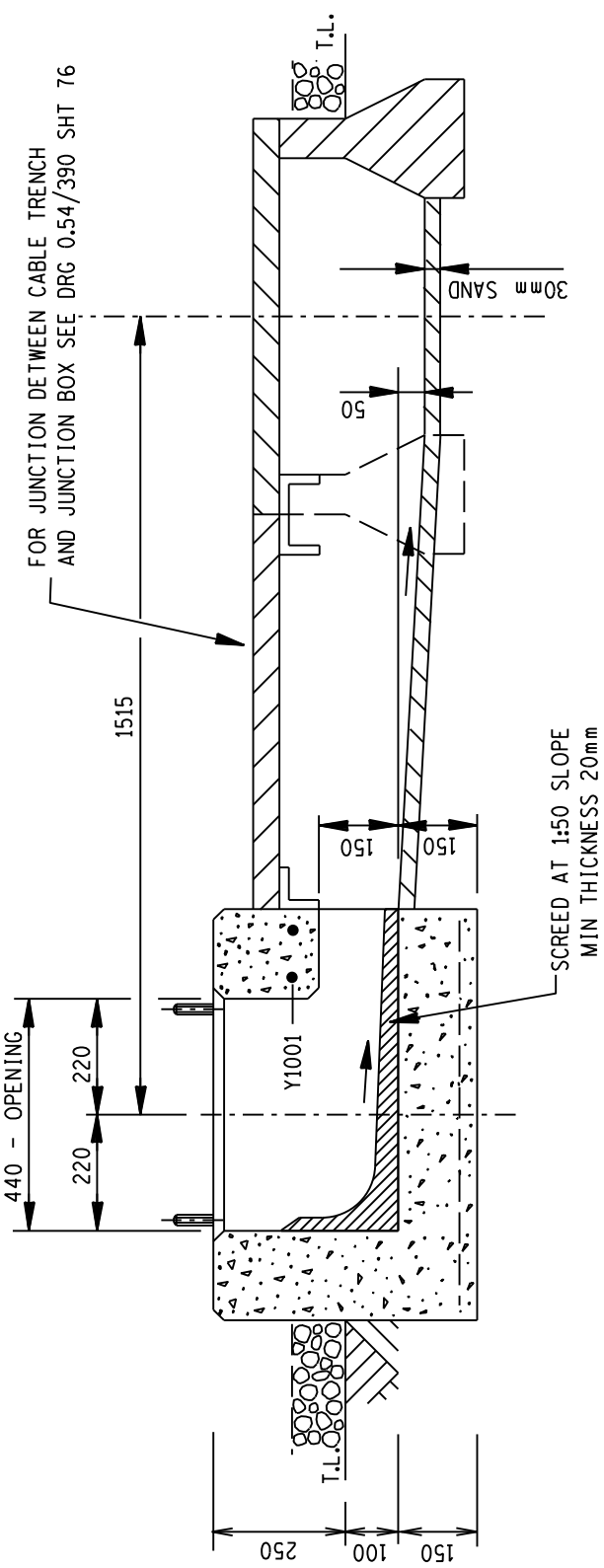

SECTION 'A'-'A'

NOTES

1.) CONCRETE STRENGTH AT 28 DAYS/STONE SIZE : BLINDING = 15/19
FOUNDATION = 25/19
CONCRETE CASTED IN FOUNDATION:
SLUMP VALUE 75mm (TOLERANCE ±25mm)
2.) MIN. COVER TO REINFORCEMENT TO BE 50mm
3 a.) HD BOLTS (GRADE 8.8) SUPPLIED BY CIVIL CONTRACTOR COMPLETE
WITH NUTS & WASHERS TO BE HOT DIPPED GALVANISED TO SANS 121
b.) THREAD TO BE OVER-CUT TO SANS 121 TO ALLOW FOR THICKNESS
OF GALVANISING
4.) FORMWORK TO EXTEND AT LEAST 150mm BELOW GROUND LEVEL
5.) ALL WELDING AND WELDING SYMBOLS TO SANS 10044
6.) STEEL TEMPLATE TO BE USED FOR SETTING OUT OF HD BOLTS
7.) 30 MPa FLOWABLE NON-SHRINK GROUT UNDER BASE PLATES ONLY
IF REQUIRED
8.) ALL TOP EDGES TO HAVE 20 x 20 CHAMFER
9.) ALL WORK TO BE IN ACCORDANCE WITH SANS 1200 SERIES OF SPECIFICATIONS
10.) CONCRETE FINISH : TOP OF FOUNDATION - WOOD FLOAT FINISH
SIDES OF FOUNDATION - SMOOTH OFF SHUTTER FINISH
11.) THESE FOUNDATIONS HAVE BEEN DESIGNED TO FOUND ON COMPETENT
FOUNDING MATERIAL. IN ALL CASES COMPETENCY OF FOUNDING MATERIAL
MUST BE ESTABLISHED BY A QUALIFIED GEO-TECHNICAL ENGINEER

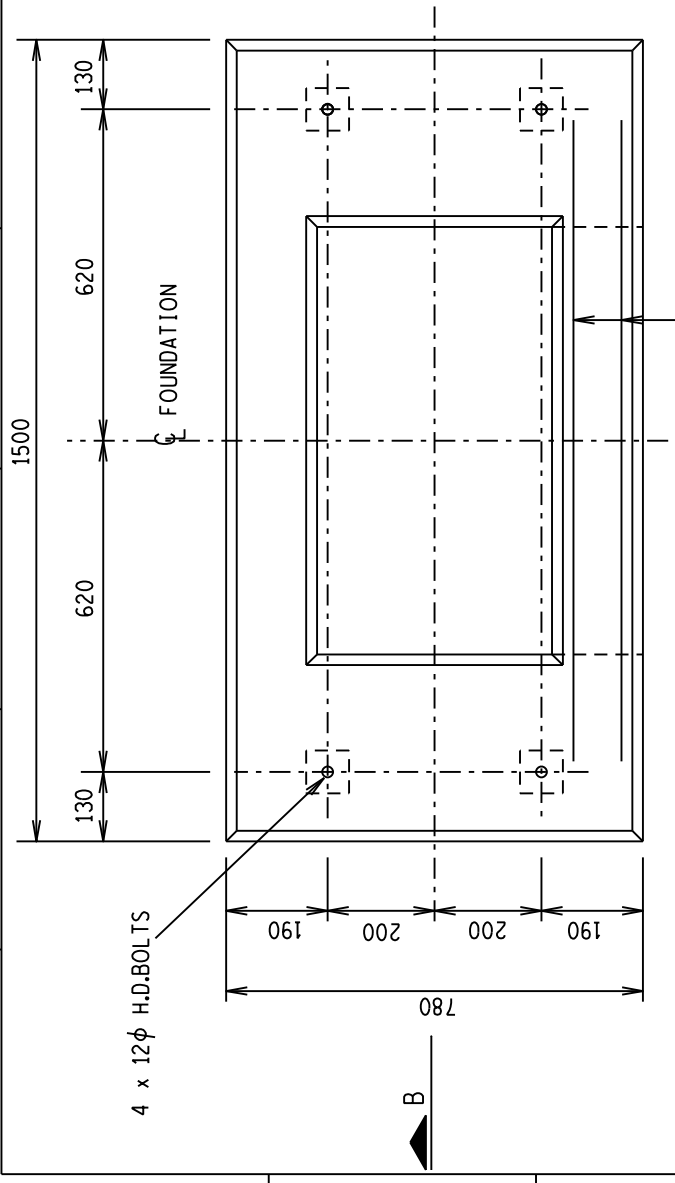

PLAN

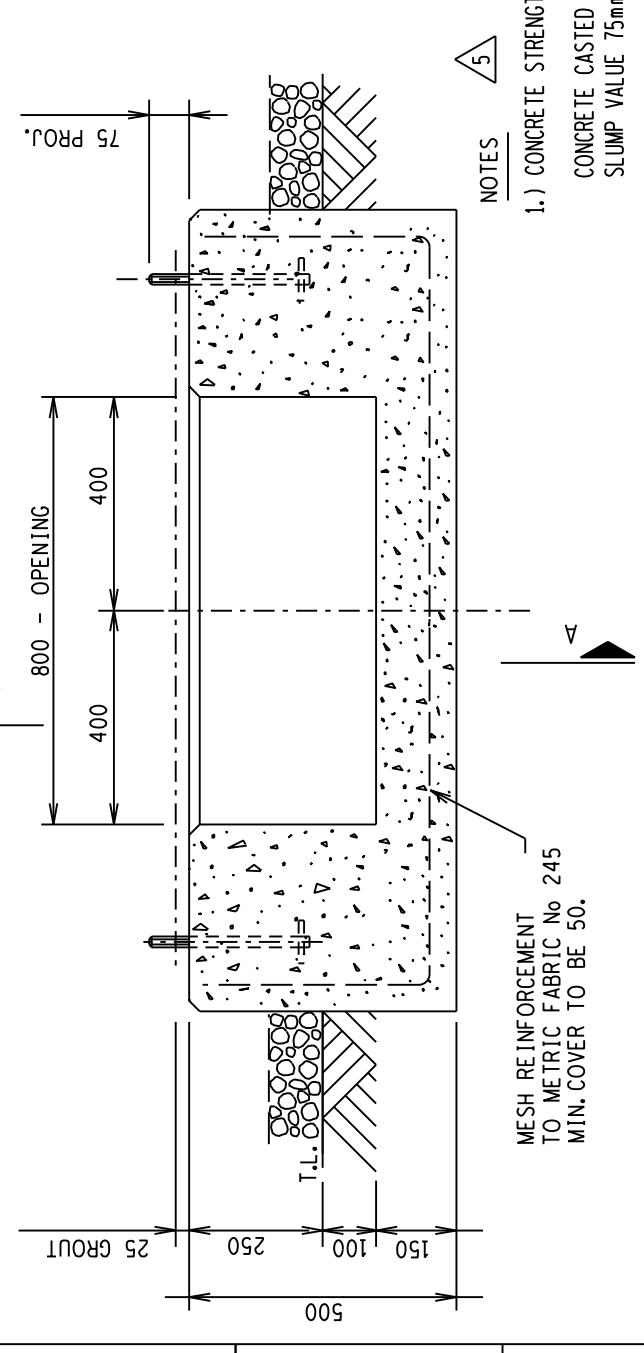

SECTION 'B'-'B'

REINFORCEMENT SCHEDULE

ITEM AND Nº OFF	BARS Y or R	DIA.	MK.	Nº OFF PER ITEM	Nº OFF TOTAL	CUTTING LENGTH mm	TOTAL LENGTH m	SHAPE CODE	STANDARD SHAPES BENDING DIMENSIONS mm A	B
BEAM 1 Nº OFF	Y	10	01	2	2	1200		20	1200	

AREA OF MESH REFERENCE No. 245 = 1,5m²

REV	DATE DATUM	AUTH MAG	CHKD NAGES	DRAWN GETEKEN	SCALE SKAAL
5	DJC.S 23.12 2015	HD BOLT & NOTES REVISED	PHD A.D.	DBN A.D.	
4	A.D. 28.01 2004	DIMENSIONS ADDED.	A.D.	A.D.	
3	DJC.S 15.03 2000	LAYOUT ADDED AND SHEET TO NUMBER ADDED	DJC.S	DJC.S	
2	DJC.S 01/98	FOUNDATION REVISED.	DJC.S	DJC.S	
1	M.vd.E 01/95	HEIGHT OF FOUNDATION REVISED.	A.D.	ADR	
0		FIRST ISSUE / EERSTE UITREIKING			390 DTL 76 TRENCH ENTRY
REV	DATE DATUM	REVISION/REVISIES INDEX REF/INDEKSVERW F1, S9	BY DEUR	CHKD NAGES	0.54/ REFERENCE DRAWINGS VERWYSINGSTEKENINGE
DRG.TEK REGISTR		TRANSMISSION SUBSTATION ENGINEERING			
CHKD NAGES					
DRAWN GETEKEN	19.12. 1994	APPROVED	GOEDGEKEUR M. v/d ENDE.	11/1/95	
SCALE SKAAL	1 : 10				

ESKOM

JUNCTION BOX
FOUNDATION DETAIL
1995 ONWARDS.

0.54/4713

SHEET 1

REV 5

SIZE GROOTTE A2L