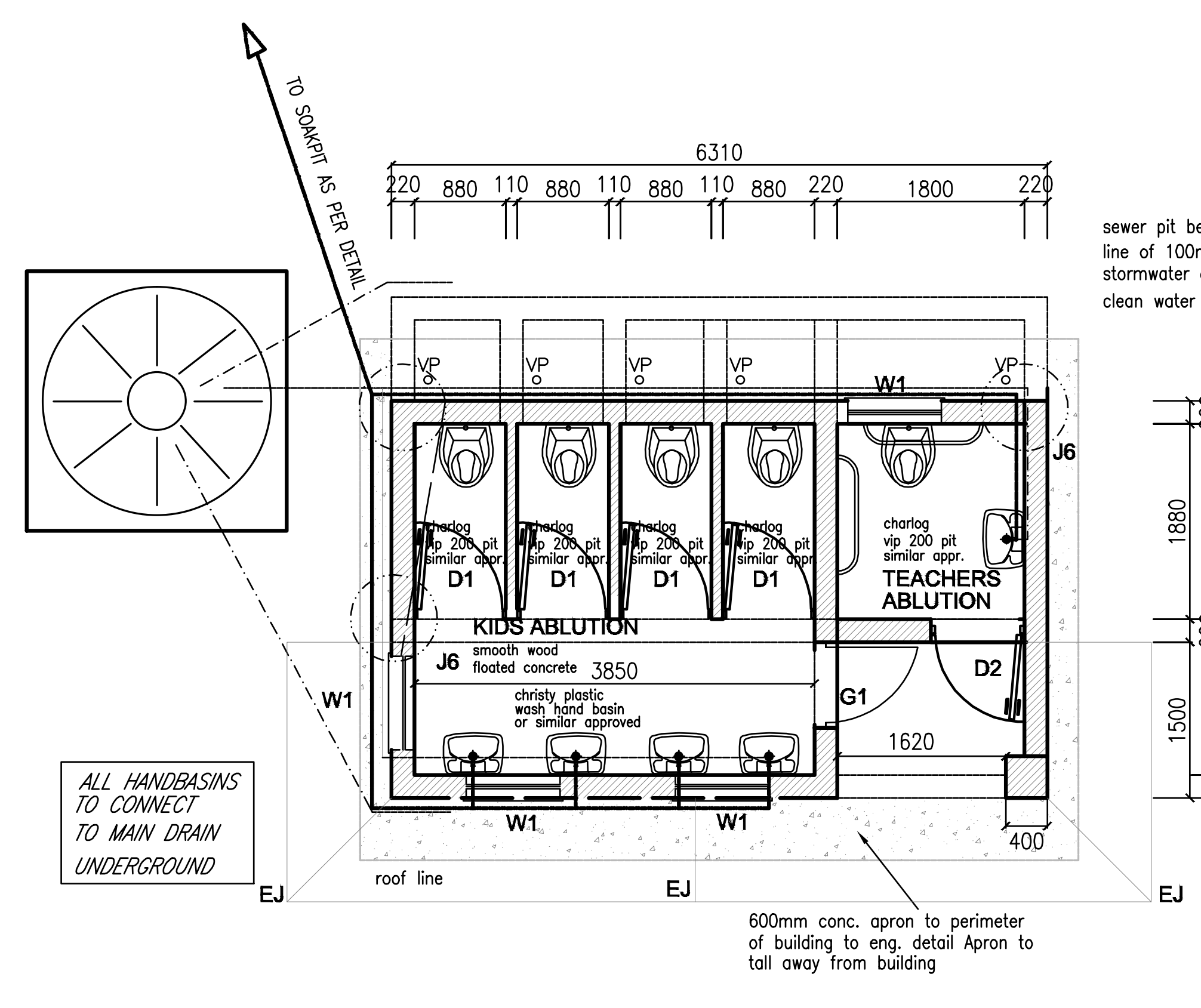
TO SOAKPIT AS PER DETAIL
6310
220 880 110 880 110 880 110 880 220 1800 220
sewer pit below shown
line of 100mm ø pvc stormwater gutter
clean water supply to detail
VP
W1
J6
charlog vip 200 pit similar appr.
D1
TEACHERS ABLUTION
KIDS ABLUTION
smooth wood floated concrete
3850
christy plastic wash hand basin or similar approved
G1
D2
1620
1880
1500
220
400
ALL HANDBASINS TO CONNECT TO MAIN DRAIN UNDERGROUND
EJ
roof line
600mm conc. apron to perimeter of building to eng. detail Apron to tall away from building

SCALE: 1:50 DETAIL DESCRIPTION. **FLOOR PLAN**

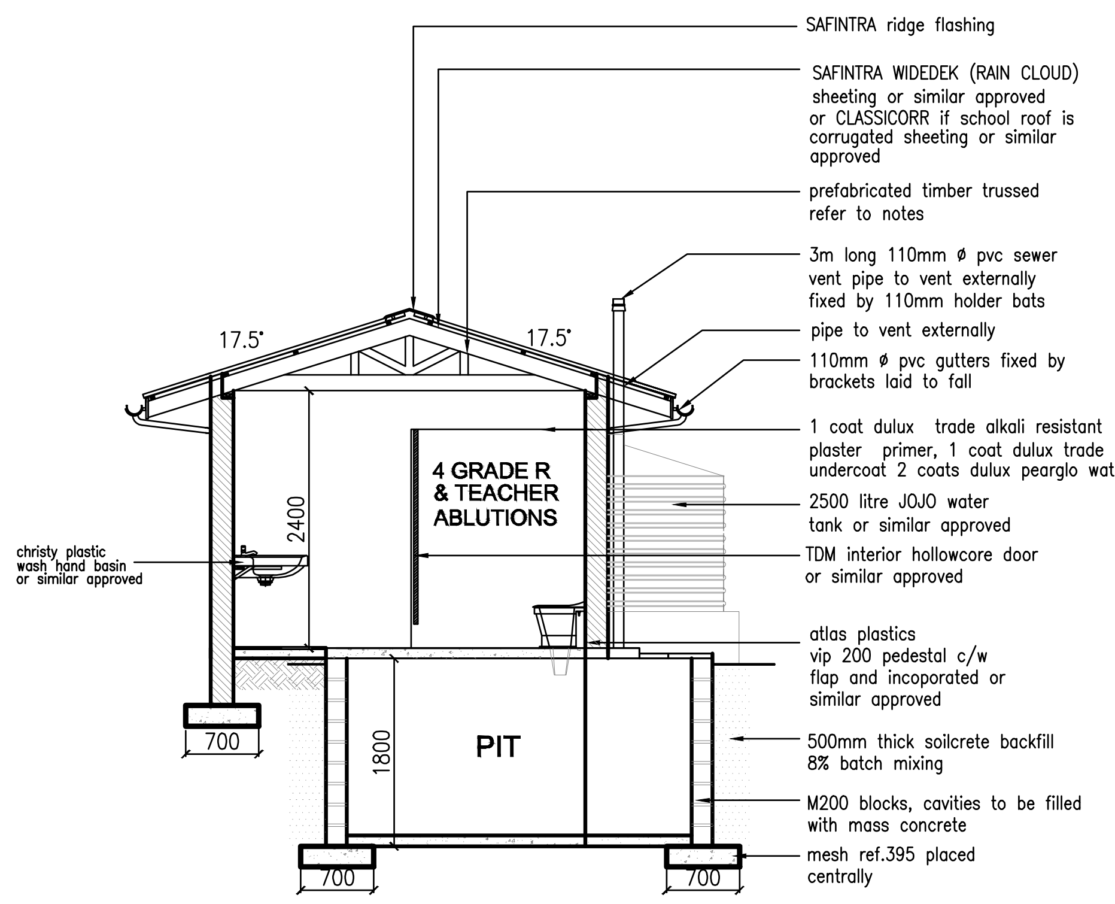
SAFINTRA ridge flashing
SAFINTRA WIDEDEK (RAIN CLOUD) sheeting or similar approved or CLASSICORR if school roof is corrugated sheeting or similar approved
prefabricated timber trussed refer to notes
3m long 110mm ø pvc sewer vent pipe to vent externally fixed by 110mm holder bats
pipe to vent externally
110mm ø pvc gutters fixed by brackets laid to fall
1 coat dulux trade alkali resistant plaster primer, 1 coat dulux trade univ. undercoat 2 coats dulux pearglo water
2500 litre JOJO water tank or similar approved
TDM interior hollowcore door or similar approved
atlas plastics vip 200 pedestal c/w flap and incoporated or similar approved
500mm thick soilcrete backfill 8% batch mixing
M200 blocks, cavities to be filled with mass concrete
mesh ref.395 placed centrally
17.5°
4 GRADE R & TEACHER ABLUTIONS
christy plastic wash hand basin or similar approved
2400
1800
PIT
700

SCALE: 1:50 DETAIL DESCRIPTION. **SECTION A-A**

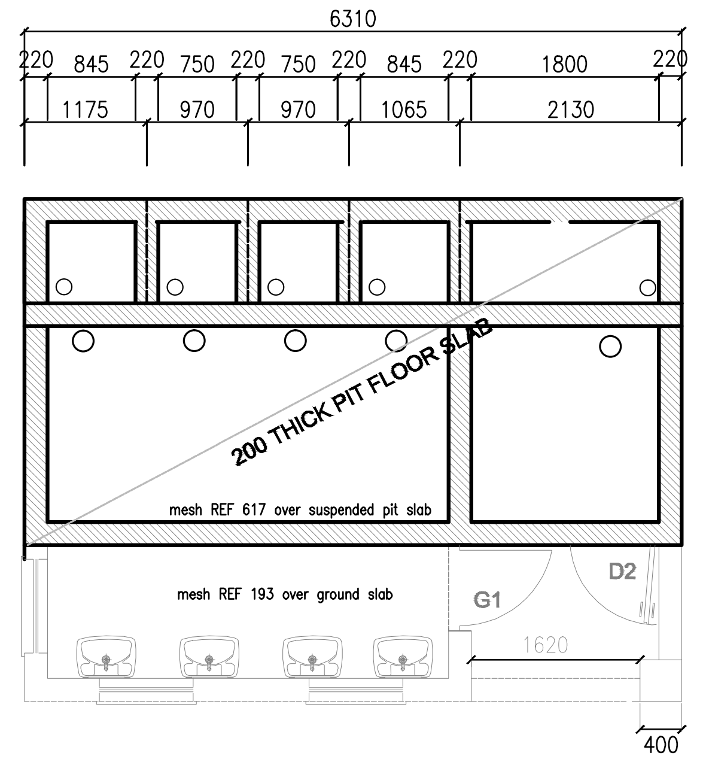
6310
220 845 220 750 220 750 220 845 220 1800 220
1175 970 970 1065 2130
1000
200 THICK PIT FLOOR SLAB
mesh REF 617 over suspended pit slab
mesh REF 193 over ground slab
G1
D2
1620
400

SCALE: 1:50 DETAIL DESCRIPTION. **PIT PLAN**

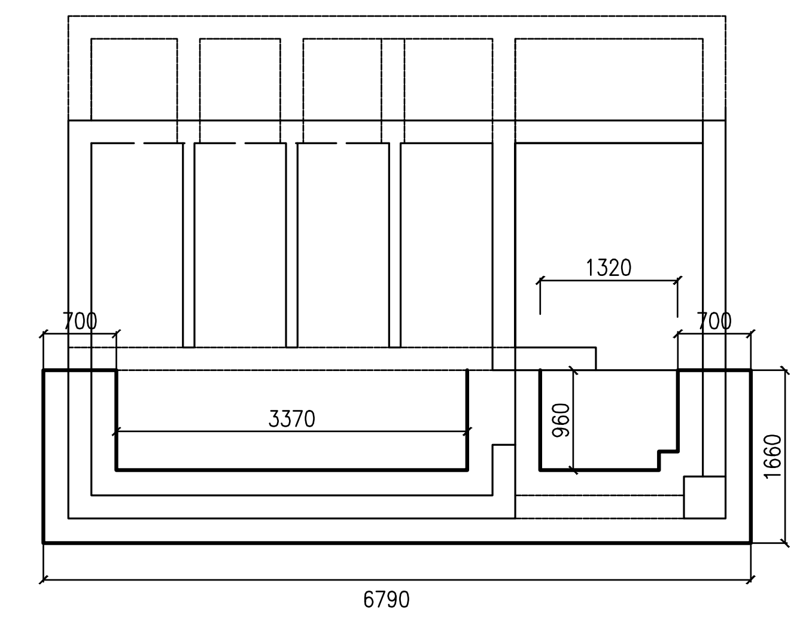
1320
700
700
3370
960
1660
6790

SCALE: 1:50 DETAIL DESCRIPTION. **FOUNDATION PLAN**

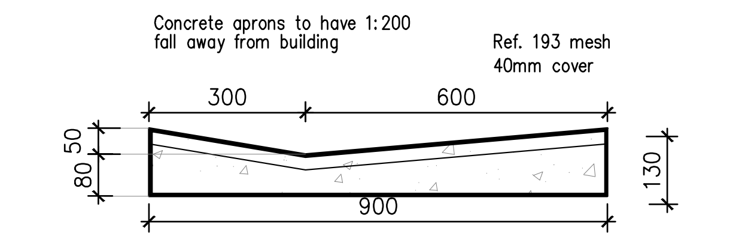
Concrete aprons to have 1:200 fall away from building
Ref. 193 mesh 40mm cover
300
600
900
80 50
130

SCALE: 1:10 DETAIL DESCRIPTION. **CONC APRON DETAIL**

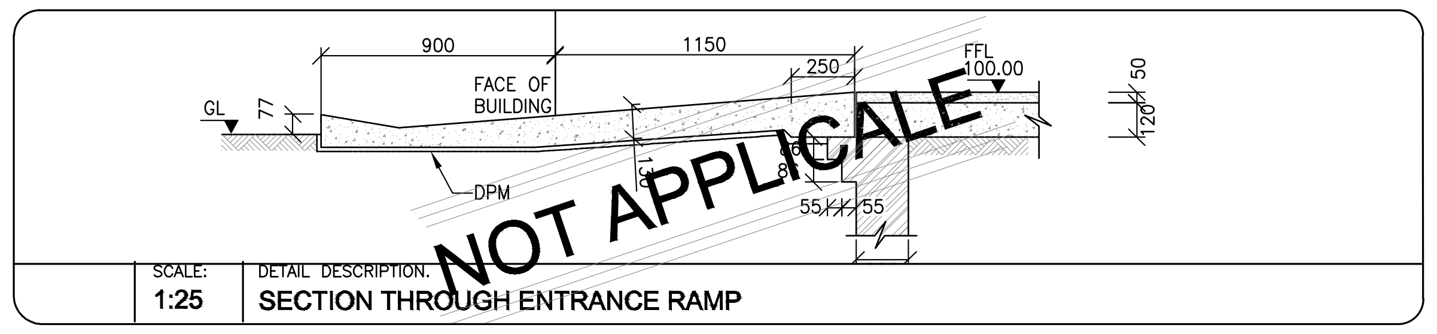
900
1150
250
FFL 100.00
GL
77
FACE OF BUILDING
DPM
55 55
50
120
NOT APPLICALE

SCALE: 1:25 DETAIL DESCRIPTION. **SECTION THROUGH ENTRANCE RAMP**

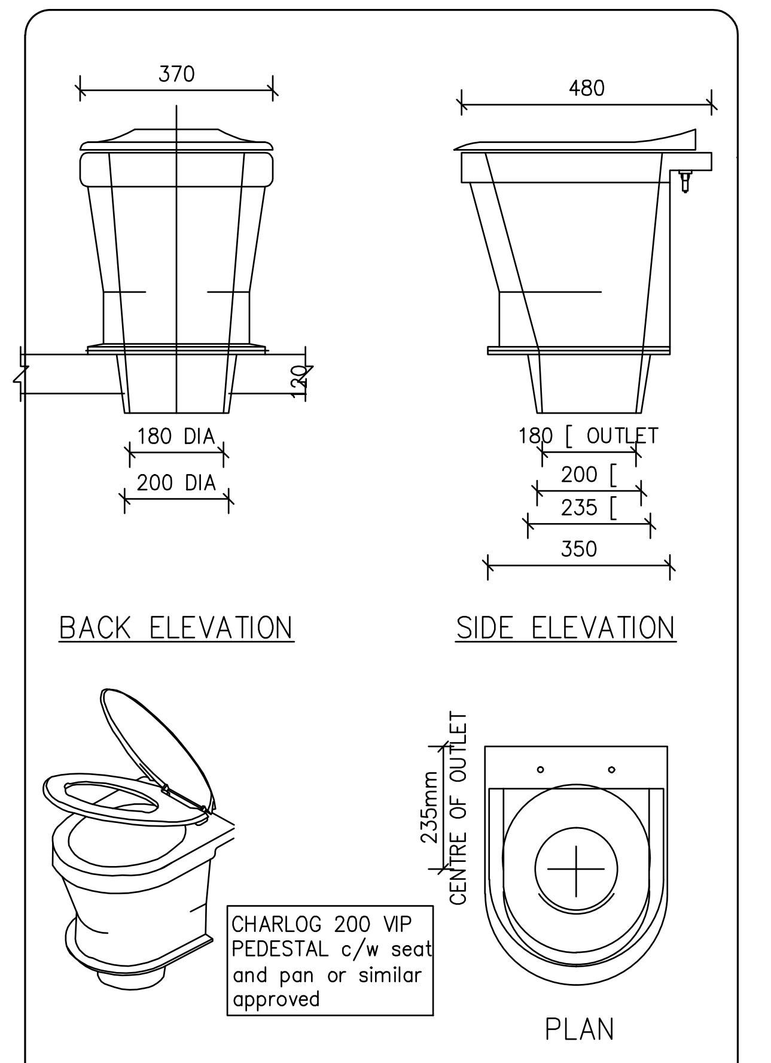
370
480
180 DIA
200 DIA
120
180 OUTLET
200
235
350
BACK ELEVATION
SIDE ELEVATION
CHARLOG 200 VIP PEDESTAL c/w seat and pan or similar approved
235mm CENTRE OF OUTLET
PLAN

SCALE: 1:50 DETAIL DESCRIPTION. **FOUNDATION PLAN** QUANTITY **4 NO OF PLOT**

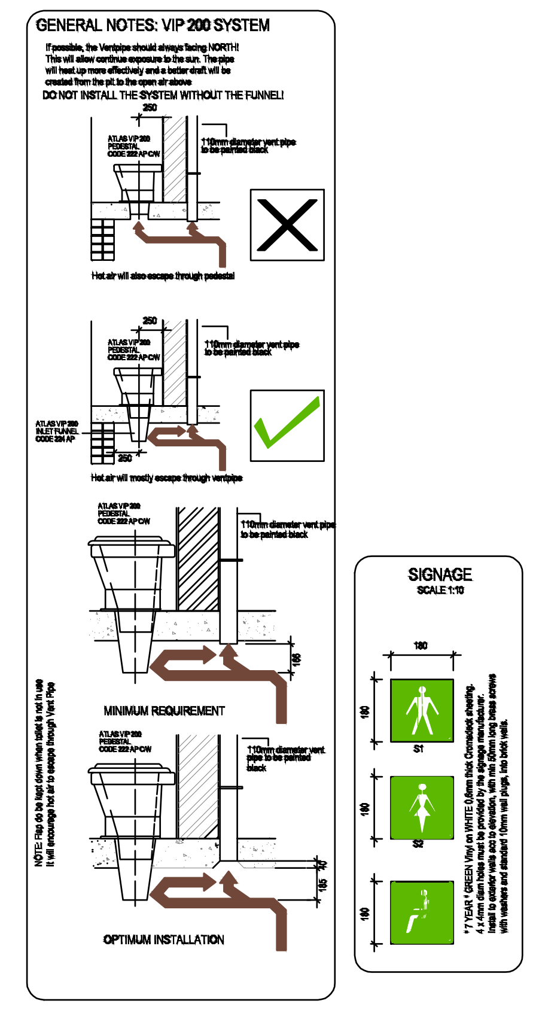
GENERAL NOTES: VIP 200 SYSTEM
If possible, the Ventpipe should always facing NORTH! This will allow continue exposure to the sun. The pipe will heat up more effectively and a better draft will be created from the pit to the open air above
DO NOT INSTALL THE SYSTEM WITHOUT THE FUNNEL!
250
ATLAS VIP 200 PEDESTAL CODE 222 AP CW
110mm diameter vent pipe to be painted black
Hot air will also escape through pedestal
ATLAS VIP 200 INLET FUNNEL CODE 224 AP
Hot air will mostly escape through ventpipe
MINIMUM REQUIREMENT
OPTIMUM INSTALLATION
NOTE: Flap do be kept down when toilet is not in use It will encourage hot air to escape through Vent Pipe
SIGNAGE
SCALE 1:10
180
S1
S2
* 7 YEAR * GREEN Vinyl on WHITE 0,6mm thick Cromadeck sheeting. 4 x 4mm diam holes must be provided by the signage manufacturer. Install to exterior walls acc to elevation, with min 50mm long brass screws with washers and standard 10mm wall plugs, into brick walls.

SCALE: 1:60 DETAIL DESCRIPTION. **VIP 200 SYSTEM & SIGNAGE**

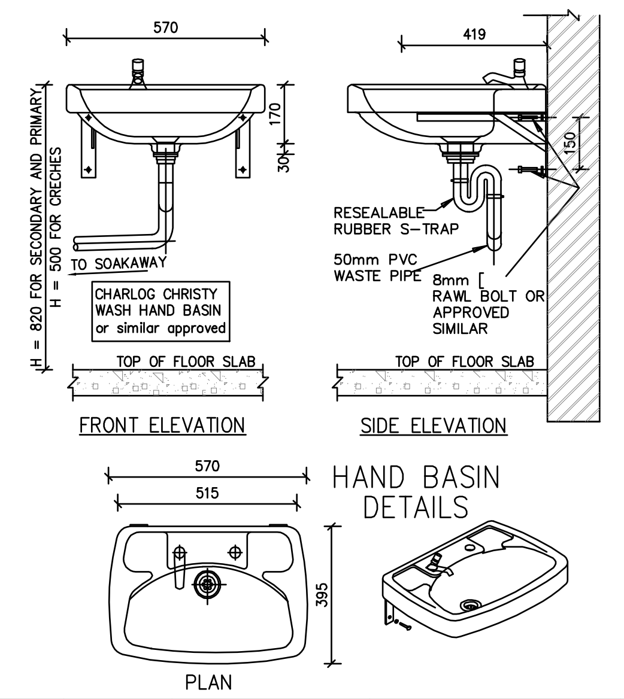
570
419
170
30
150
H = 820 FOR SECONDARY AND PRIMARY
H = 500 FOR CRECHES
TO SOAKAWAY
CHARLOG CHRISTY WASH HAND BASIN or similar approved
RESEALABLE RUBBER S-TRAP
50mm PVC WASTE PIPE
8mm RAWL BOLT OR APPROVED SIMILAR
TOP OF FLOOR SLAB
FRONT ELEVATION
SIDE ELEVATION
570
515
395
HAND BASIN DETAILS
PLAN

SCALE: 1:75 DETAIL DESCRIPTION. **BASIN** QUANTITY **3 NO. OF**

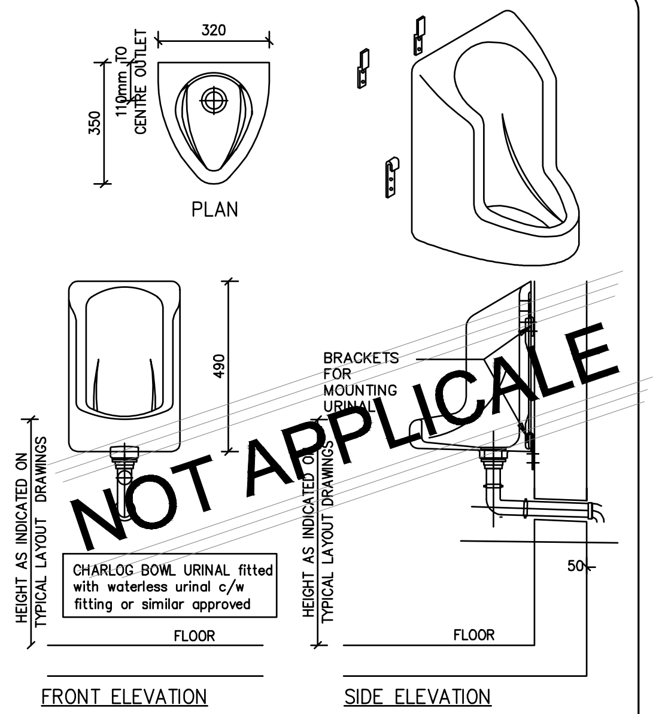
320
350
110mm TO CENTRE OUTLET
PLAN
490
BRACKETS FOR MOUNTING URINAL
HEIGHT AS INDICATED ON TYPICAL LAYOUT DRAWINGS
CHARLOG BOWL URINAL fitted with waterless urinal c/w fitting or similar approved
FLOOR
50
FRONT ELEVATION
SIDE ELEVATION
NOT APPLICALE

SCALE: 1:75 DETAIL DESCRIPTION. **BOWL URINAL** QUANTITY **1 NO. OF**

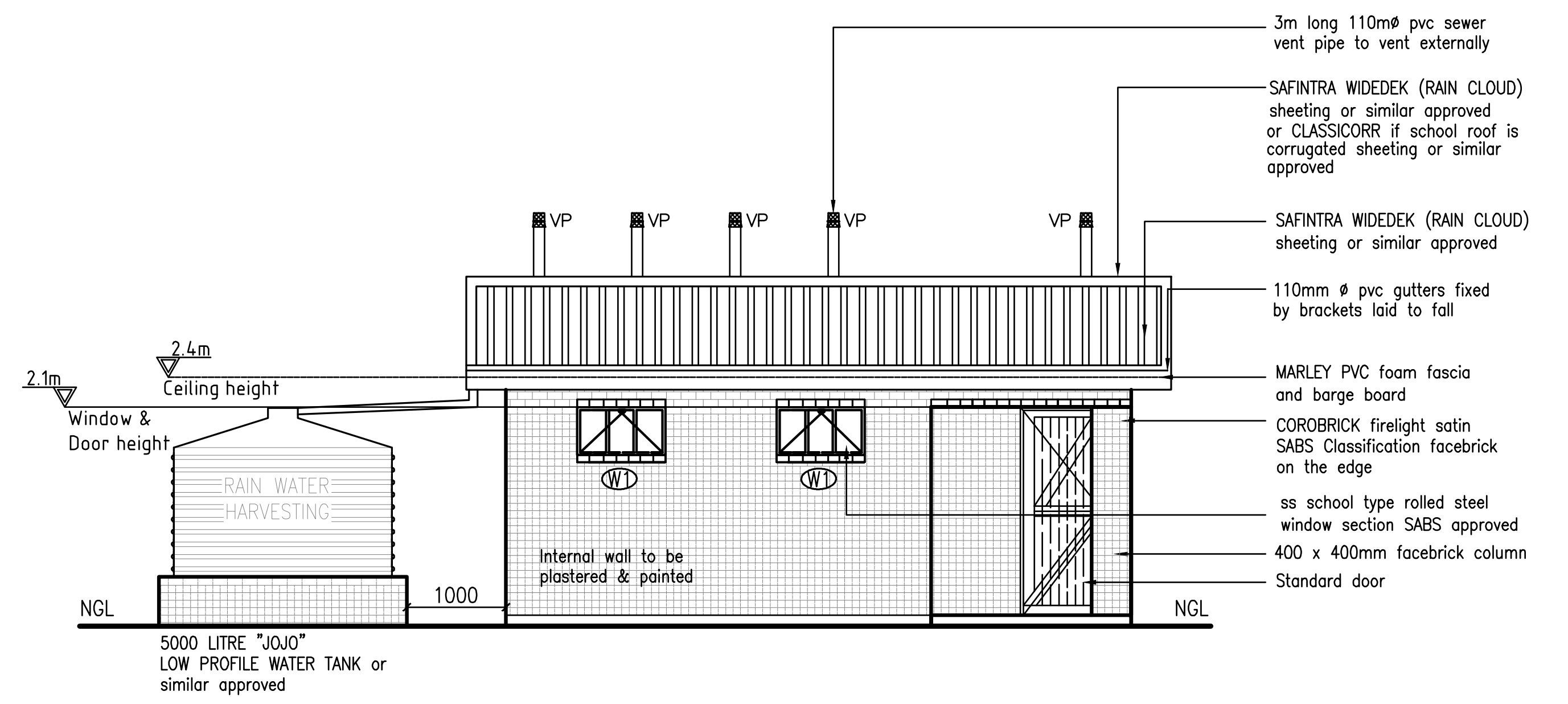
3m long 110mø pvc sewer vent pipe to vent externally
SAFINTRA WIDEDEK (RAIN CLOUD) sheeting or similar approved or CLASSICORR if school roof is corrugated sheeting or similar approved
SAFINTRA WIDEDEK (RAIN CLOUD) sheeting or similar approved
110mm ø pvc gutters fixed by brackets laid to fall
MARLEY PVC foam fascia and barge board
COROBRICK firelight satin SABS Classification facebrick on the edge
ss school type rolled steel window section SABS approved
400 x 400mm facebrick column
Standard door
VP
2.4m
2.1m
Ceiling height
Window & Door height
RAIN WATER HARVESTING
W1
Internal wall to be plastered & painted
NGL
1000
5000 LITRE "JOJO" LOW PROFILE WATER TANK or similar approved

SCALE: 1:50 DETAIL DESCRIPTION. **FRONT ELEVATION**

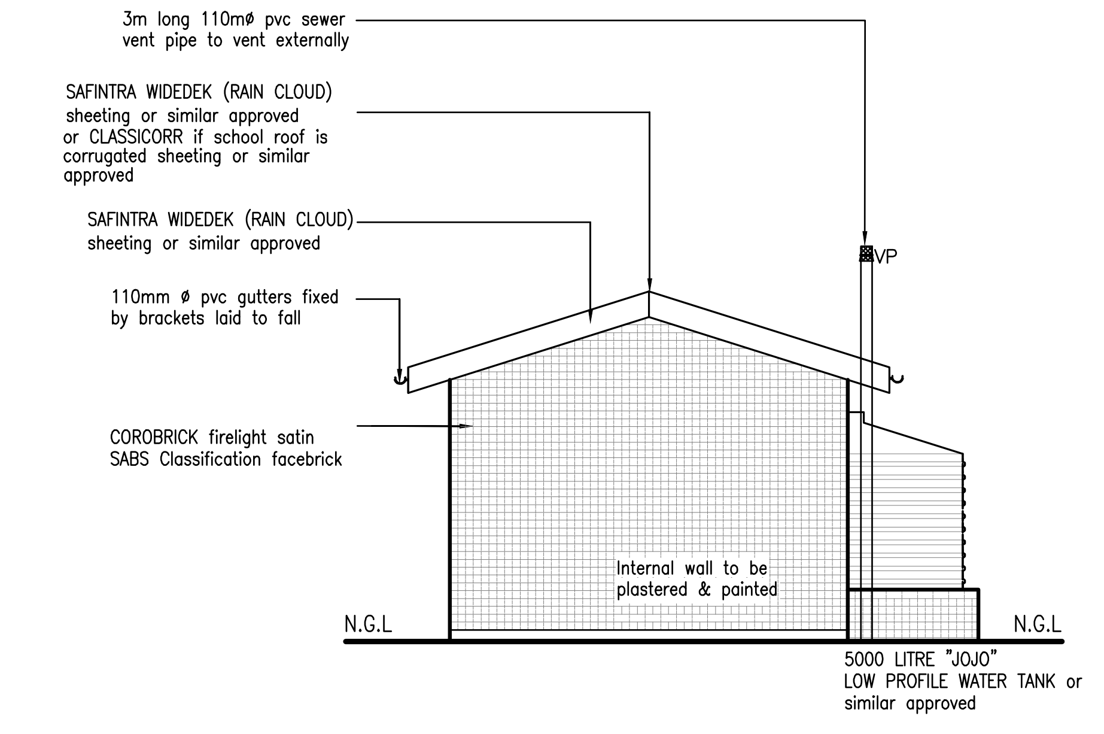
3m long 110mø pvc sewer vent pipe to vent externally
SAFINTRA WIDEDEK (RAIN CLOUD) sheeting or similar approved or CLASSICORR if school roof is corrugated sheeting or similar approved
SAFINTRA WIDEDEK (RAIN CLOUD) sheeting or similar approved
110mm ø pvc gutters fixed by brackets laid to fall
COROBRICK firelight satin SABS Classification facebrick
VP
Internal wall to be plastered & painted
N.G.L
5000 LITRE "JOJO" LOW PROFILE WATER TANK or similar approved

SCALE: 1:50 DETAIL DESCRIPTION. **SIDE ELEVATION**

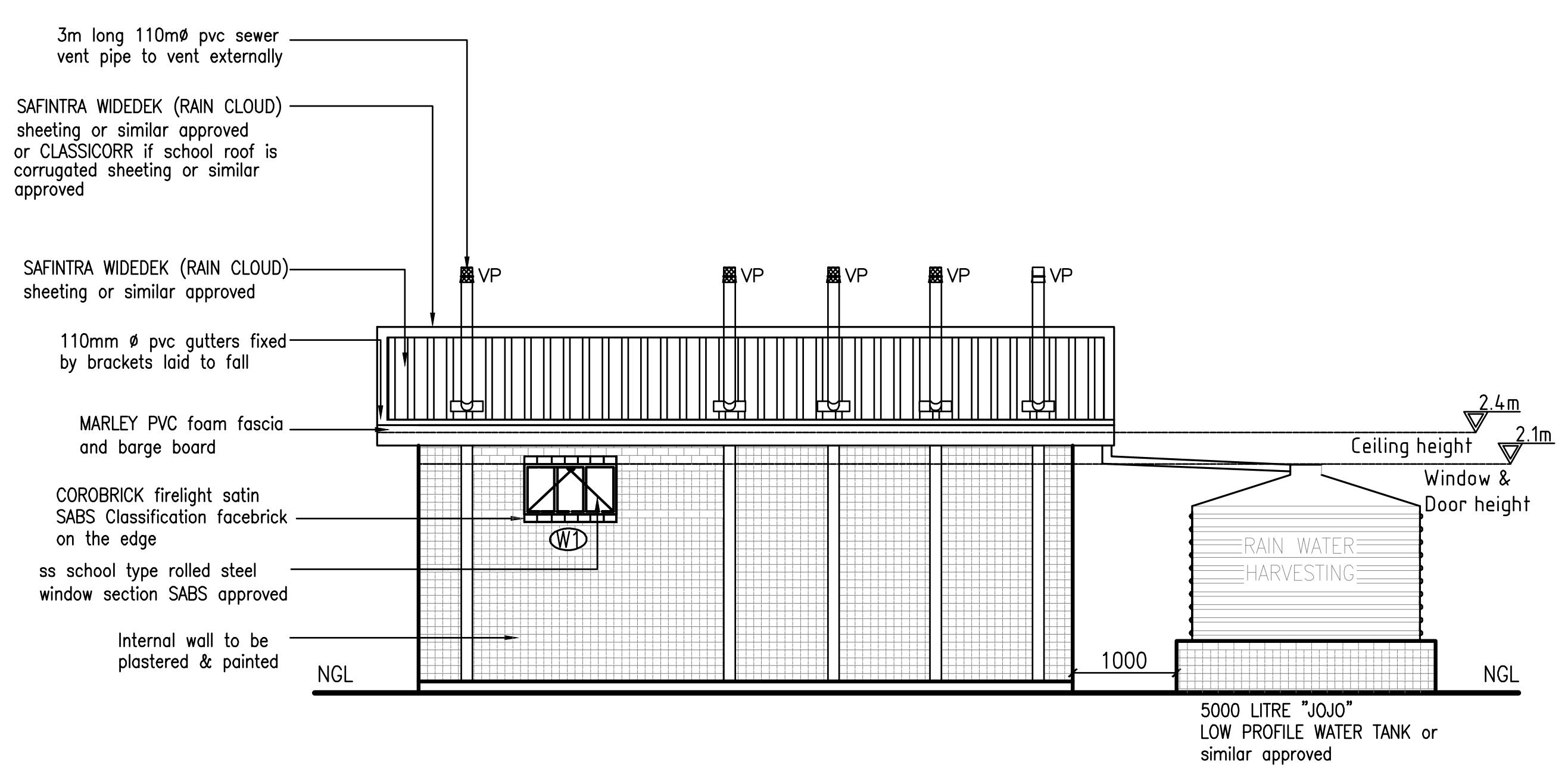
3m long 110mø pvc sewer vent pipe to vent externally
SAFINTRA WIDEDEK (RAIN CLOUD) sheeting or similar approved or CLASSICORR if school roof is corrugated sheeting or similar approved
SAFINTRA WIDEDEK (RAIN CLOUD) sheeting or similar approved
110mm ø pvc gutters fixed by brackets laid to fall
MARLEY PVC foam fascia and barge board
COROBRICK firelight satin SABS Classification facebrick on the edge
ss school type rolled steel window section SABS approved
Internal wall to be plastered & painted
VP
W1
2.4m
2.1m
Ceiling height
Window & Door height
RAIN WATER HARVESTING
NGL
1000
5000 LITRE "JOJO" LOW PROFILE WATER TANK or similar approved

SCALE: 1:50 DETAIL DESCRIPTION. **BACK ELEVATION**

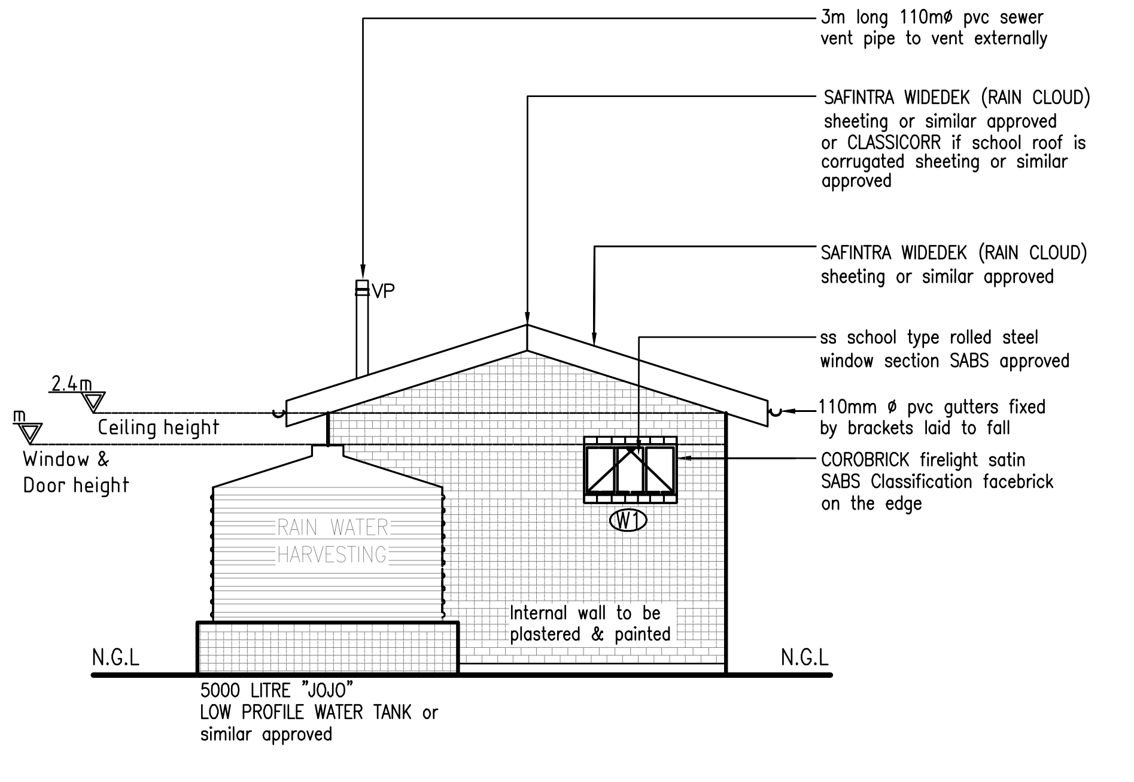
3m long 110mø pvc sewer vent pipe to vent externally
SAFINTRA WIDEDEK (RAIN CLOUD) sheeting or similar approved or CLASSICORR if school roof is corrugated sheeting or similar approved
SAFINTRA WIDEDEK (RAIN CLOUD) sheeting or similar approved
ss school type rolled steel window section SABS approved
110mm ø pvc gutters fixed by brackets laid to fall
COROBRICK firelight satin SABS Classification facebrick on the edge
VP
2.4m
Ceiling height
Window & Door height
RAIN WATER HARVESTING
W1
Internal wall to be plastered & painted
N.G.L
5000 LITRE "JOJO" LOW PROFILE WATER TANK or similar approved

SCALE: 1:50 DETAIL DESCRIPTION. **SIDE ELEVATION**

THIS ROOF STRUCTURE MUST BE INSPECTED BY A PROFESSIONAL ENGINEER OF OTHER APPROVED REGISTERED COMPETED PERSON IN ACCORDANCE WITH THE REQUIREMENTS OF THE NATIONAL BUILDING REGULATIONS

THIS ROOF SHOULD BE ERICTED BY AN ITC CERTIFIED ROOF ERECTOR – CATEGORY A

ALL TRUSS TIMBER TO BE FACE MARKED WITH THE CORRECT SABS GRADE

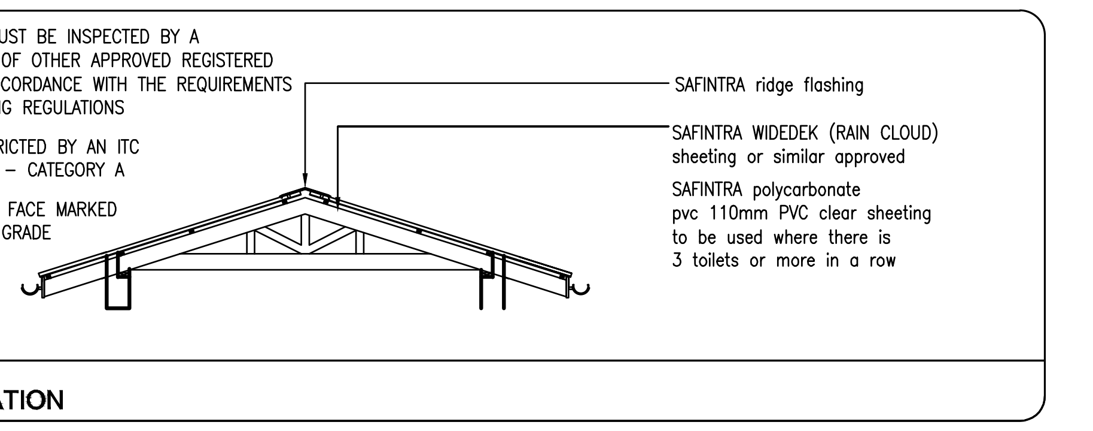
SAFINTRA ridge flashing
SAFINTRA WIDEDEK (RAIN CLOUD) sheeting or similar approved
SAFINTRA polycarbonate pvc 110mm PVC clear sheeting to be used where there is 3 toilets or more in a row

SCALE: 1:50 DETAIL DESCRIPTION. **TRUSS ELEVATION**

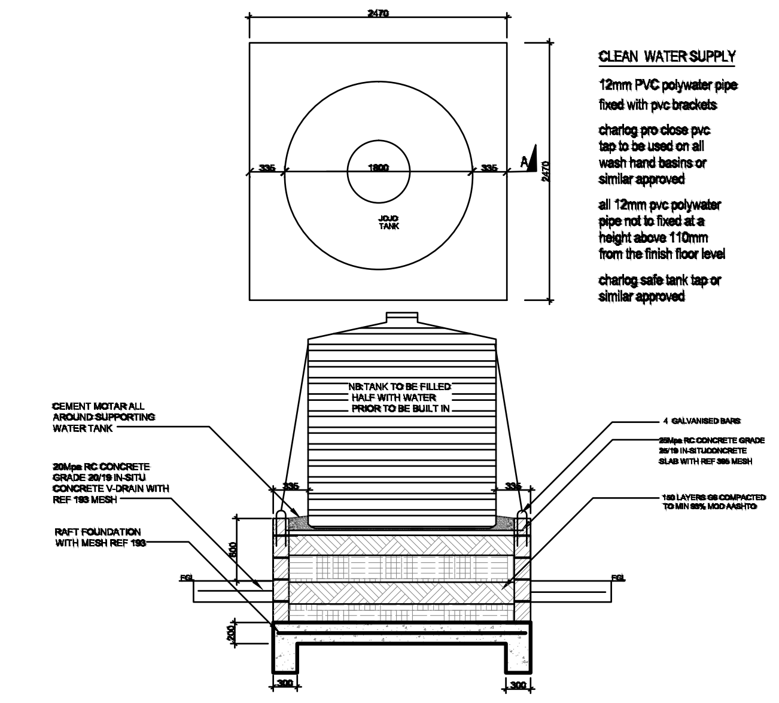
2470
335
1800
335
A
JOJO TANK
CLEAN WATER SUPPLY
12mm PVC polywater pipe fixed with pvc brackets
charlog pro close pvc tap to be used on all wash hand basins or similar approved
all 12mm pvc polywater pipe not to fixed at a height above 110mm from the finish floor level
charlog safe tank tap or similar approved
NB:TANK TO BE FILLED HALF WITH WATER PRIOR TO BE BUILT IN
CEMENT MOTAR ALL AROUND SUPPORTING WATER TANK
20Mpa RC CONCRETE GRADE 20/19 IN-SITU CONCRETE V-DRAIN WITH REF 193 MESH
RAFT FOUNDATION WITH MESH REF 193
4 GALVANISED BARS
25Mpa RC CONCRETE GRADE 25/19 IN-SITUOCONCRETE SLAB WITH REF 395 MESH
150 LAYERS G5 COMPACTED TO MIN 93% MOD AASHTO
FGL
600
200
300

SCALE: 1:50 DETAIL DESCRIPTION. **WATER TANK STAND DETAIL**

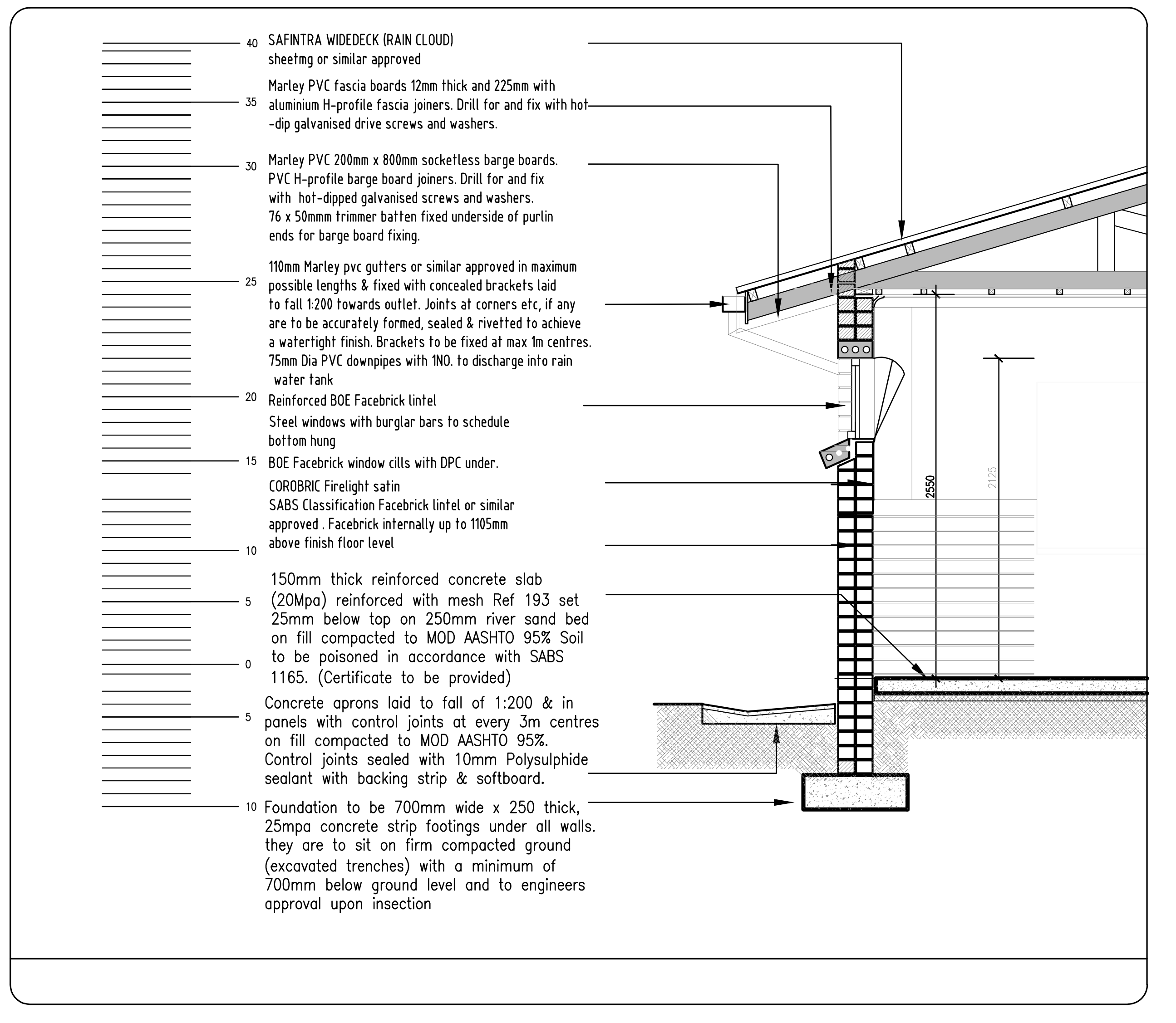
40
35
30
25
20
15
10
5
0
5
10
2550
2125

SAFINTRA WIDEDECK (RAIN CLOUD) sheetmg or similar approved

Marley PVC fascia boards 12mm thick and 225mm with aluminium H-profile fascia joiners. Drill for and fix with hot-dip galvanised drive screws and washers.

Marley PVC 200mm x 800mm socketless barge boards. PVC H-profile barge board joiners. Drill for and fix with hot-dipped galvanised screws and washers. 76 x 50mmm trimmer batten fixed underside of purlin ends for barge board fixing.

110mm Marley pvc gutters or similar approved in maximum possible lengths & fixed with concealed brackets laid to fall 1:200 towards outlet. Joints at corners etc, if any are to be accurately formed, sealed & rivetted to achieve a watertight finish. Brackets to be fixed at max 1m centres. 75mm Dia PVC downpipes with 1NO. to discharge into rain water tank

Reinforced BOE Facebrick lintel

Steel windows with burglar bars to schedule bottom hung

BOE Facebrick window cills with DPC under.

COROBRIC Firelight satin SABS Classification Facebrick lintel or similar approved . Facebrick internally up to 1105mm above finish floor level

150mm thick reinforced concrete slab (20Mpa) reinforced with mesh Ref 193 set 25mm below top on 250mm river sand bed on fill compacted to MOD AASHTO 95% Soil to be poisoned in accordance with SABS 1165. (Certificate to be provided)

Concrete aprons laid to fall of 1:200 & in panels with control joints at every 3m centres on fill compacted to MOD AASHTO 95%. Control joints sealed with 10mm Polysulphide sealant with backing strip & softboard.

Foundation to be 700mm wide x 250 thick, 25mpa concrete strip footings under all walls. they are to sit on firm compacted ground (excavated trenches) with a minimum of 700mm below ground level and to engineers approval upon insection

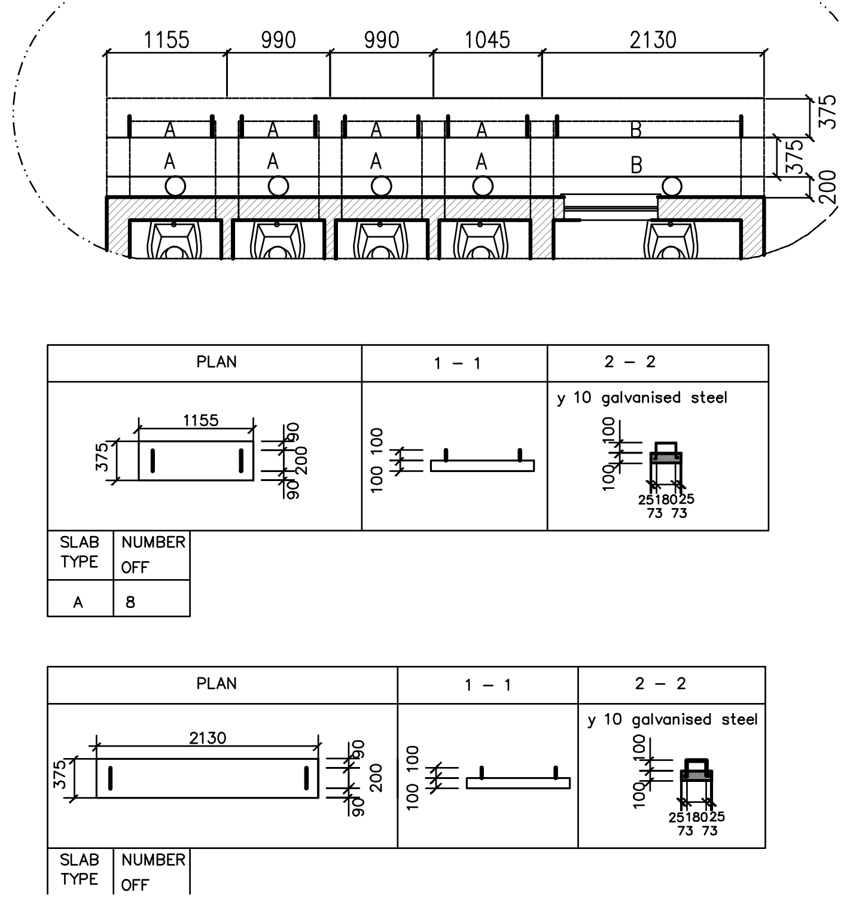
1155 990 990 1045 2130
A
B
375
200
PLAN
1 – 1
2 – 2
1155
375
90
200
100 100
y 10 galvanised steel
25 180 25
73 73
SLAB TYPE
NUMBER OFF
A
8
2130
SLAB TYPE
NUMBER OFF

SCALE: 1:50 DETAIL DESCRIPTION. **SLAB DETAIL**

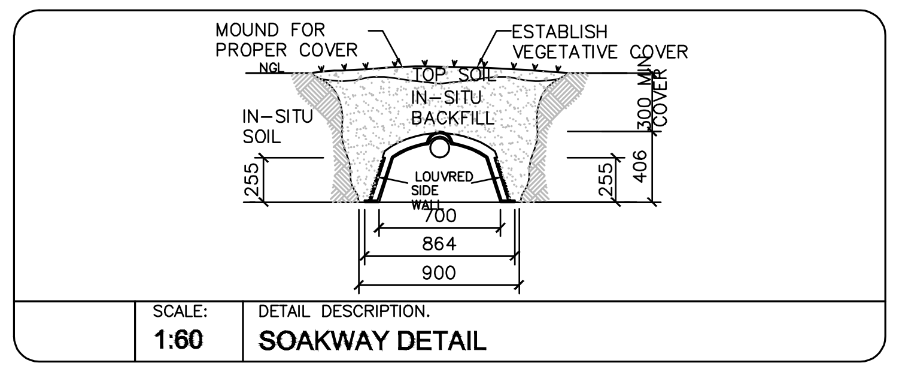
MOUND FOR PROPER COVER
NGL
ESTABLISH VEGETATIVE COVER
TOP SOIL
IN-SITU BACKFILL
IN-SITU SOIL
300 MIN COVER
LOUVRED SIDE WALL
255
406
700
864
900

SCALE: 1:60 DETAIL DESCRIPTION. **SOAKWAY DETAIL**

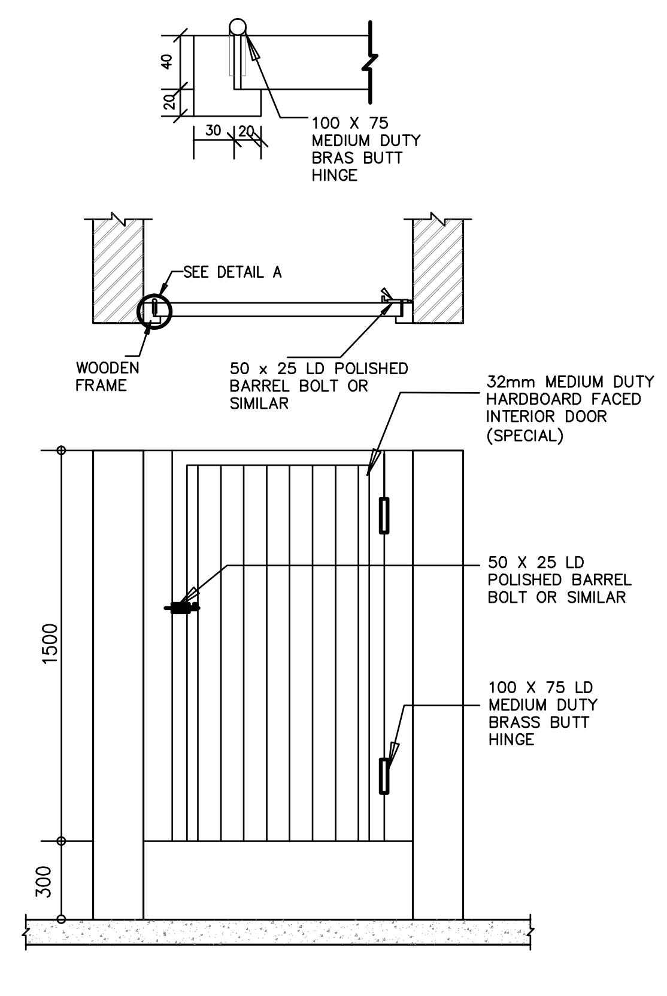
40
20
30
20
100 X 75 MEDIUM DUTY BRAS BUTT HINGE
SEE DETAIL A
WOODEN FRAME
50 x 25 LD POLISHED BARREL BOLT OR SIMILAR
32mm MEDIUM DUTY HARDBOARD FACED INTERIOR DOOR (SPECIAL)
50 X 25 LD POLISHED BARREL BOLT OR SIMILAR
100 X 75 LD MEDIUM DUTY BRASS BUTT HINGE
1500
300

SCALE: 1:20 DETAIL DESCRIPTION. **STABLE DOOR** QUANTITY **3 NO. OF**

| | |
|---|---|
| | 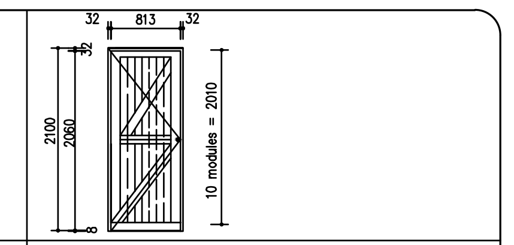 |
| | Refer to plan for handing |
| TYPE: | D1 |
| FRAME: | 1.2mm galvanised pressed metal<br>1 No. frame suitable for 230mm wall |
| F.FINISH: | Galvanised. Not painted. |
| DOOR: | 2032x813x40mm TDM hardwood BB doors, SA Pine sub frame with double top and bottom rails, tounge and groove boarding in v. joint rail, 20 x 150mm middle ledge, 20 x 225mm bottom ledge and 20 x 110mm braces. |
| D.FINISH: | Wood prime, one coat undercoat and two coats gloss |
| FURNITURE | DOOR SET 2 |
| | 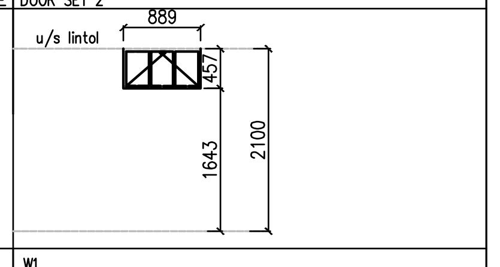 |
| TYPE: | W1 |
| FRAME: | Bottom hung SS school sandblasted glass puttied window sections. SABS approve |
| GLASS: | 4mm sandblasted glass puttied in with steel window putty. |
| FITTING: | Approved standard brass fittings completed with window. |
| B. BARS | 8mmø bars |
| FINISH: | Galvanised. No Painting required |
| NOTES: | Courses adjacent to window jambs are to have cares filled allowing fixing lugs to be built-in |

32 813 32
2100
2060
10 modules = 2010
889
u/s lintol
457
1643
2100

SCALE: 1:60 DETAIL DESCRIPTION. **DOOR SET & WINDOW**

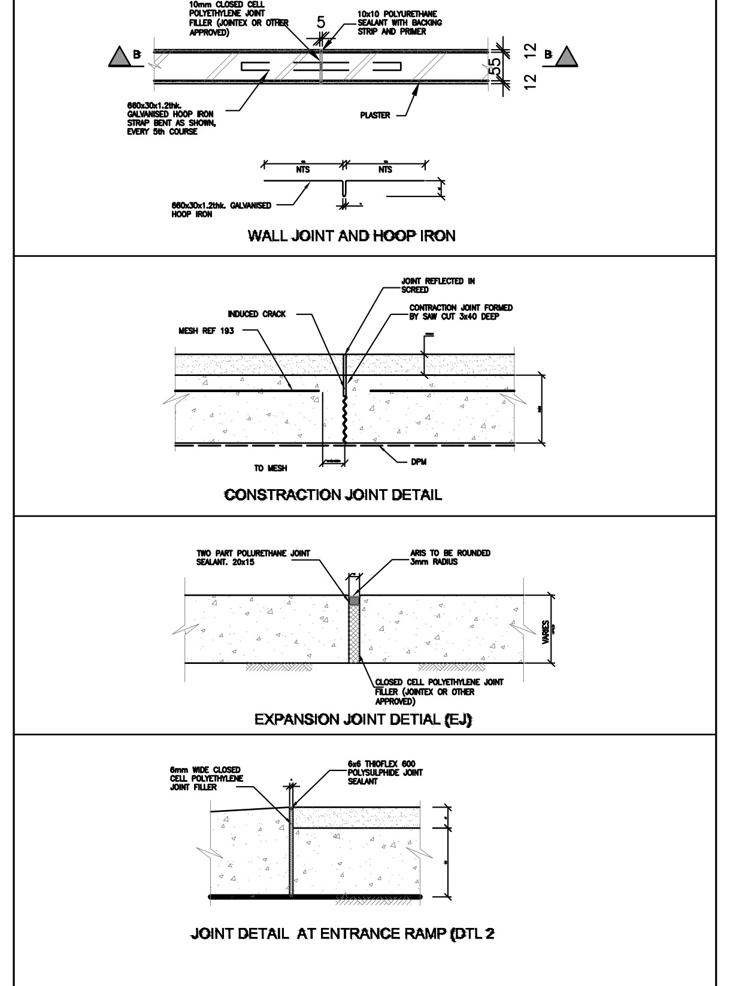
10mm CLOSED CELL POLYETHYLENE JOINT FILLER (JOINTEX OR OTHER APPROVED)
10x10 POLYURETHANE SEALANT WITH BACKING STRIP AND PRIMER
5
55
12 12
B
660x30x1.2thk. GALVANISED HOOP IRON STRAP BENT AS SHOWN, EVERY 5th COURSE
PLASTER
NTS
660x30x1.2thk. GALVANISED HOOP IRON
WALL JOINT AND HOOP IRON
JOINT REFLECTED IN SCREED
INDUCED CRACK
CONTRACTION JOINT FORMED BY SAW CUT 3x40 DEEP
MESH REF 193
TO MESH
DPM
CONSTRACTION JOINT DETAIL
TWO PART POLURETHANE JOINT SEALANT. 20x15
ARIS TO BE ROUNDED 3mm RADIUS
VARIES
CLOSED CELL POLYETHYLENE JOINT FILLER (JOINTEX OR OTHER APPROVED)
EXPANSION JOINT DETIAL (EJ)
6mm WIDE CLOSED CELL POLYETHYLENE JOINT FILLER
6x6 THIOFLEX 600 POLYSULPHIDE JOINT SEALANT
JOINT DETAIL AT ENTRANCE RAMP (DTL 2

SCALE: 1:10 DETAIL DESCRIPTION. **JOINT DETAILS**

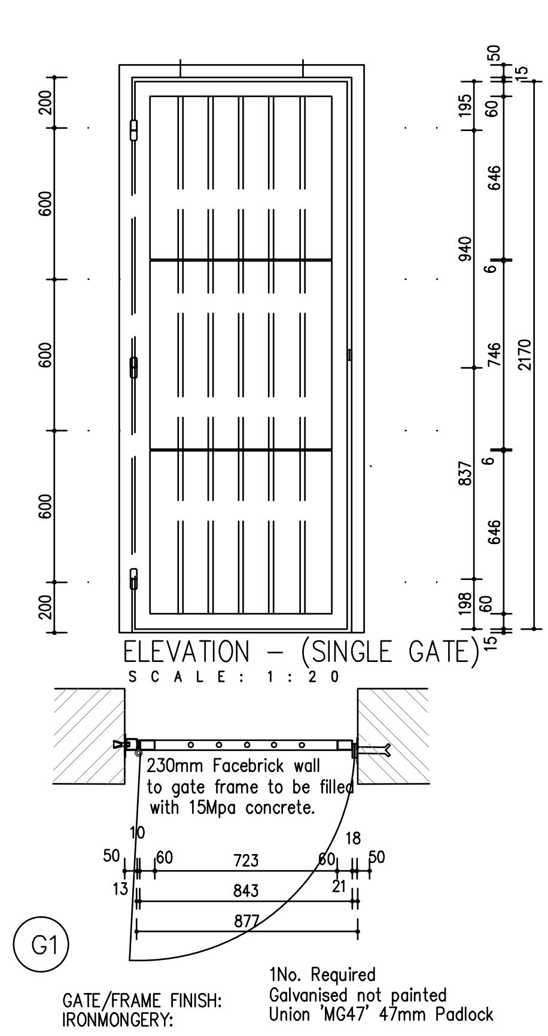
200
600
600
600
200
50
15
195
60
646
940
6
746
2170
2250
837
6
646
198
60
15
ELEVATION – (SINGLE GATE)
SCALE: 1:20
230mm Facebrick wall to gate frame to be filled with 15Mpa concrete.
10
18
50
60
723
60
50
13
843
21
877
G1

GATE/FRAME FINISH: Galvanised not painted
IRONMONGERY: Union 'MG47' 47mm Padlock

1No. Required

SCALE: AS SHOWN DETAIL DESCRIPTION: **GATE DETAILS**

## CONSTRUCTION NOTES

**A. GENERAL NOTE:**
1. The implementing agent will give direction whether a pit will be sealed or un-sealed depending on the outcome of the ground water protocol.
2. The contractor will be responsible for excavation the pit, whatever the ground conditions, his/her cost.
3. All blocks to be nfx engineering blocks for the whole substructure.
4. Section a-a shows the arrangement for an un-sealed pit, for sealed pits the outside wall of the substructure must be solid with no open vertical joints.
5. The bottom of the pit will include a 500mm thick concrete base to ensure the pit is fully sealed.
6. Central dividing walls must be constructed with fully mortared joints for the full depth.
7. The outer wall of the pit must have a minimum thickness of 200mm
8. The pit must be 1 course of bricks above the natural ground level.
9. The slabs will be designed and approved by the implementing agent.
10. The rain water harvesting tank must be equipped with a foad valve and connected to the main water supply within the school yard, where it is available.
11. Taps in all wash hand basin must be charlock pvc Pro.
12. Close taps to ensure reliable water conservation, which must be able to close at minimum 15kpa pressure.
13. Vent pipes to secured to the walls outside the ablution facilities
- 3m 110mm Ø vent pipe (black - uv) fixed with 3 110mm holder bats
- 110mm fly screen used at vent end Charlock VIP 200 toilet pedestals to be complete with seat lid. Grade R: Char Bambi I/drop (kiddie pan)
- pipes from sinks & urinal outlets to soakaway pit (50mm pvc)
- pipes from gutters to fill tank (75mm pvc)
- pipe form tank to sinks (15mm polycop) fitting to be done internally

**B. FOUNDATIONS**
1. Foundation to be 700mm wide x 250 thick, 25 mpa concrete strip footing under all walls.
2. They are to sit on firm compacted ground (excavated trenches) with a minimum of 700mm below ground level and to engineers approval upon inspection.

**C. BACKFILL**
1. Fill & imported fill to be approved clean earth, well watered & rammed in layers not exceeding 150mm in depth and thoroughly consolidated to a density of 95% mod ashto.

**D. FLOORS**
1. All to Engineers detail and specificaton.

**E. WALLS**
1. All walls are to comply with "Part K" of the National Building Regulations.
2. COROBRICK COMMONS to be used where to recieve plaster. COROBRICK ENGINEERING Bricks to be used below ground level in foundation walls.
3. Brickforce to every 3rd course up to window head height thereafter all courses from window head to underside of wallplate. Galvanised crimp wire wall ties (7 per square metre - laid staggered).
4. External face of inner skin to be painted bitumen paint. 375 micron embossed damp-proof membrane stepped below all window cills.
5. Where plaster is required internally (13 - 16mm thick) ratio must be 1:5 cement:sand mix. Beam filling to underside of roofing sheets.
6. Control joints to be provided in accordance with engineers specifications & must be seated with 12mm deep polysulphide sealant with backing strip and impregnated softboard.
7. All internal brickwork to have brickforce at every third course of brickwork.
8. All founding and / or retaining wall to Structural Engineers details.
9. P.C. lintols to be installed over all new openings wheres walls to be plastered and painted.
10. All Facebrick on edge lintols strictly to eng. detail

**F. ROOF**
1. Safintra 0,5mm thick AZ150ZincAl Widedek profile roof sheeting, fixed to intermediate steel purlins at 1600mm centres and to ridge and eaves purlins at 1350mm centres, 12x55mm long class3 metal self drilling screws at every second crest at intermediate purlins and every crest at eaves purlins all in accordance with the manufacturer's recommendations.
2. The sheeting shall be Widedek trapezoidal type profile as manufactured by Safintra Roofing.
3. The profile shall be roll-formed with 5 trapezoidal ribs at 191mm centres with a nett cover of 760mm.
4. The rib height shall be 29mm and shall be fixed in accordance with the manufacturer's recommendations
5. Widedek sheeting the recommended minimum pitch for slopes in excess of 15m is 10° and for slopes less than 15m is 7.5°
6. Widedek sheeting can be ordered in any length, subject to transport limitations up to 13,2m . Longer lengths require special transport arrangements.
7. Purlin spacings are dependant on both downward loading and negative suction loading caused by wind. The engineer should be consulted to calculate the load (kN/m²) for particular application

### CONCRETE MIX RATIO'S

| STRENTH | UNIT.CEM | UNIT SAND | UNIT STONE |
|---|---|---|---|
| 10MPa | 2 | 3.5 | 3.5 |
| 15MPa | 2 | 3 | 3 |
| 25MPa | 2 | 2.5 | 2.5 |
| 30MPa | 2 | 2 | 2 |

| NO. | DATE | REVISION | DRAWN |
|---|---|---|---|
| 0 | 10/07/13 | FOR APPROVAL | S.Z |
| 1 | 11/02/14 | FOR APPROVAL | S.Z |
| 2 | 28/02/14 | FOR APPROVAL | S.Z |
| 3 | 14/03/14 | FOR APPROVAL | S.Z |
| 4 | 18/03/14 | FOR APPROVAL | S.Z |

Client

CLIENT

**DEPARTMENT of EDUCATION**

PROVINCE OF KWAZULU-NATAL

| | NAME | SIGNATURE | DATE | SHEET SIZE |
|---|---|---|---|---|
| DESIGNED | | | | A0 |
| DRAWN | | | | |
| VERIFIED | | | | |
| VALIDATED | | | | SCALE<br>1:10 1:20 1:25 1:50 |

STATUS LEGEND
I = Information
T = Tender
C = Construction
AB = As built

IMPLEMENTING AGENT

PROJECT: SCHOOL SANITATION

TITLE: ABLUTIONS BLOCK : 4 GRADE R & 1 TEACHER

DESCRIPTION: PLANS & SECTION DETAILS SCHEDULES

DRG No. : L1205 - 001 11 OF 12