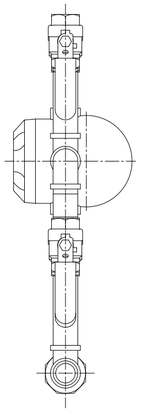

SIDE VIEW

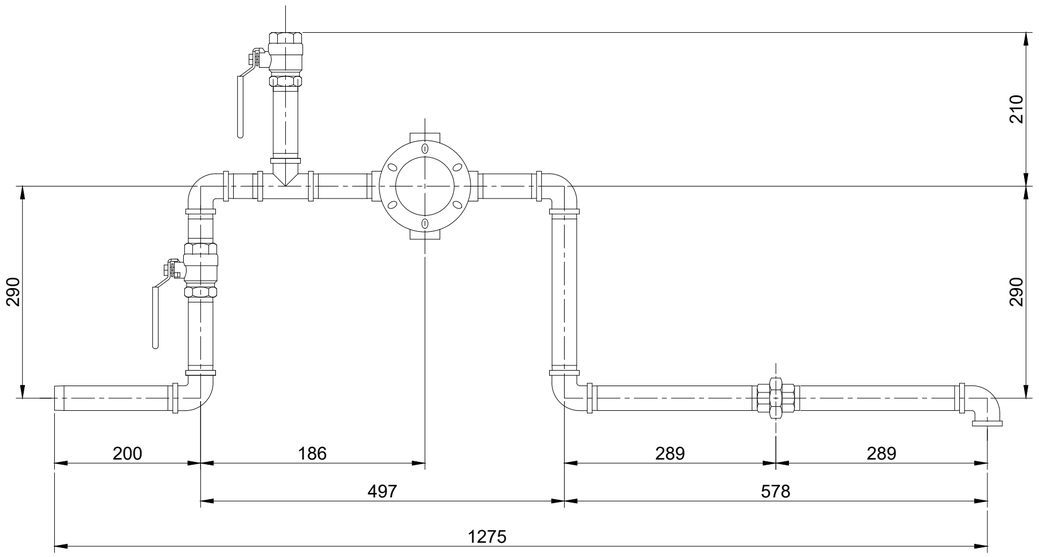

FRONT VIEW

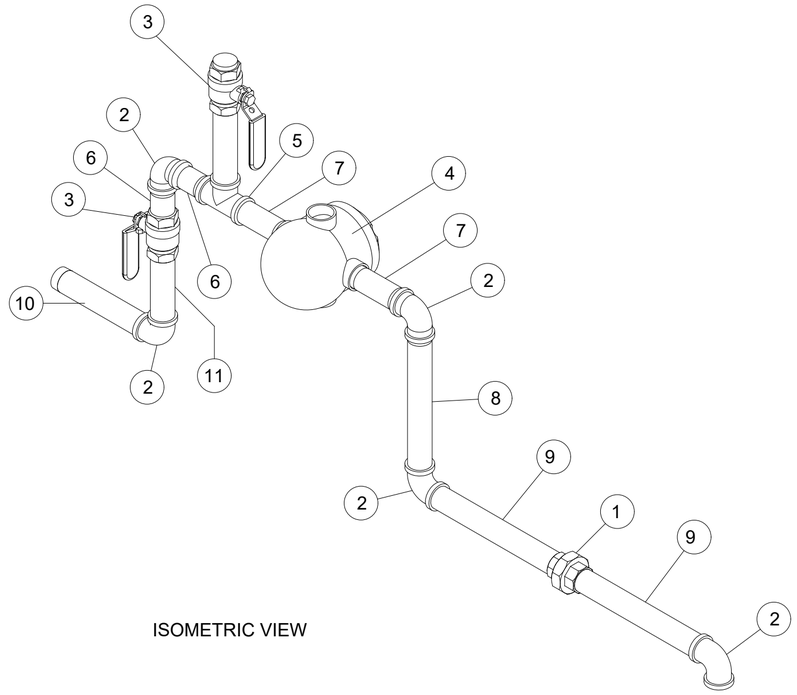

ISOMETRIC VIEW

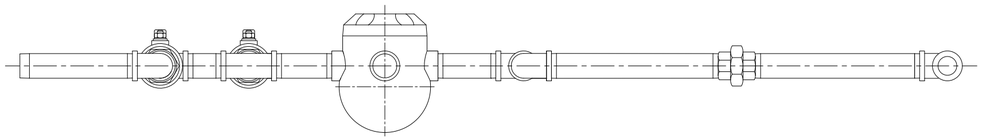

BOTTOM VIEW

PARTS LIST

ITEM	PART NUMBER	QTY	DESCRIPTION	MATERIAL	MASS	TOTAL MASS	REMARKS
1	8	1	UNION 25NB BSP GALV FEMALE / FEMALE	Malleable Iron	0.40 kg	0.40 kg	DIN EN 10242
2	9	5	ELBOW 90 DEG 25NB BSP SHORT RADIUS GALV FEMALE / FEMALE	Malleable Iron	0.10 KG	0.50 KG	DIN EN 10242
3	10	2	25NB 316 STAINLESS STEEL BALL VALVE FEMALE / FEMALE BSP	316 S/STEEL	0.80 kg	1.60 kg	316 S/STEEL
4	PENNANT PD62	1	PD62 (L-R) LIQUID DRAIN TRAP DN 25 BSP	STEEL	9.00 kg	9.00 kg	PENNANT PD62
5	12	1	25NB EQUAL TEE BSP FEMALE GALV	Malleable Iron	0.15 kg	0.15 kg	DIN EN 10242
6	13	2	25NB BARREL NIPPLE BSPT GALV	Malleable Iron	0.05 kg	0.10 kg	DIN EN 10242
7	14	2	25NB PIPE THREADED BOTH ENDS GALV 105MM LG	CARBON STEEL	0.29 kg	0.58 kg	SANS 62 HEAVY GALV
8	15	1	25NB PIPE THREADED BOTH ENDS GALV 240MM LG	CARBON STEEL	0.67 kg	0.67 kg	SANS 62 HEAVY GALV
9	16	2	25NB PIPE THREADED BOTH ENDS GALV 250MM LG	CARBON STEEL	0.70 kg	1.40 kg	SANS 62 HEAVY GALV
10	17	1	25NB PIPE THREADED BOTH ENDS GALV 186MM LG	CARBON STEEL	0.52 kg	0.52 kg	SANS 62 HEAVY GALV
11	18	1	25NB PIPE THREADED BOTH ENDS GALV 125MM LG	CARBON STEEL	0.35 kg	0.35 kg	SANS 62 HEAVY GALV

GENERAL NOTES

1. ALL PIPES 25NB-150NB (SANS 62 HEAVY WALL) SUITABLE FOR FLANGED CONNECTIONS (SANS 1123-4000/3 R/F U.O.N) AND PIPES 25NB AND BELOW SHALL BE SCREWED TO SANS 1109
2. PIPE FITTINGS TO BE TIGHTENED BY HEMP OR APPROVED PRODUCT BY ENGINEER. LEAK TEST ON COMPLETION - REFER TO PCS.
3. ALL DIMENSIONS TO BE CHECKED ON SITE BEFORE ANY WORK
4. COMMENCES, ANY DISCREPANCIES SHALL BE BROUGHT TO THE ATTENTION OF THE ENGINEER

D.O.	REV	DATE	REVISION	REV BY	CHKD BY	APP BY	AUTH BY	KKS APP	REFERENCE DRAWINGS
	00	15/09/2024	FOR APPROVAL	FVN	FVN	FVN			
	A	01/09/2024	FOR APPROVAL	FVN	FVN	FVN			

AUTHORISED FOR ESKOM BY:

CODIFICATION BY:

APPROVED BY: FERDI VAN NIEKERK

CHECKED BY: FERDI VAN NIEKERK

CREATED BY: FERDI VAN NIEKERK

SCALE: AS NOTED

FVN Solutions

SICK

concor CONTRACTS Build to Inst.

Eskom
ESKOM HOLDINGS SOC Ltd
REG No 2002/015527/30

KUSILE POWER STATION
STACK INSTRUMENT AIR SUPPLY
25NB AIR SUPPLY WATER TRAP 32M

CONTRACTOR DRAWING NO.
FVN-P0133-MAN-A002

ESKOM DRAWING NO. 366-503360

SHT —

REV 00