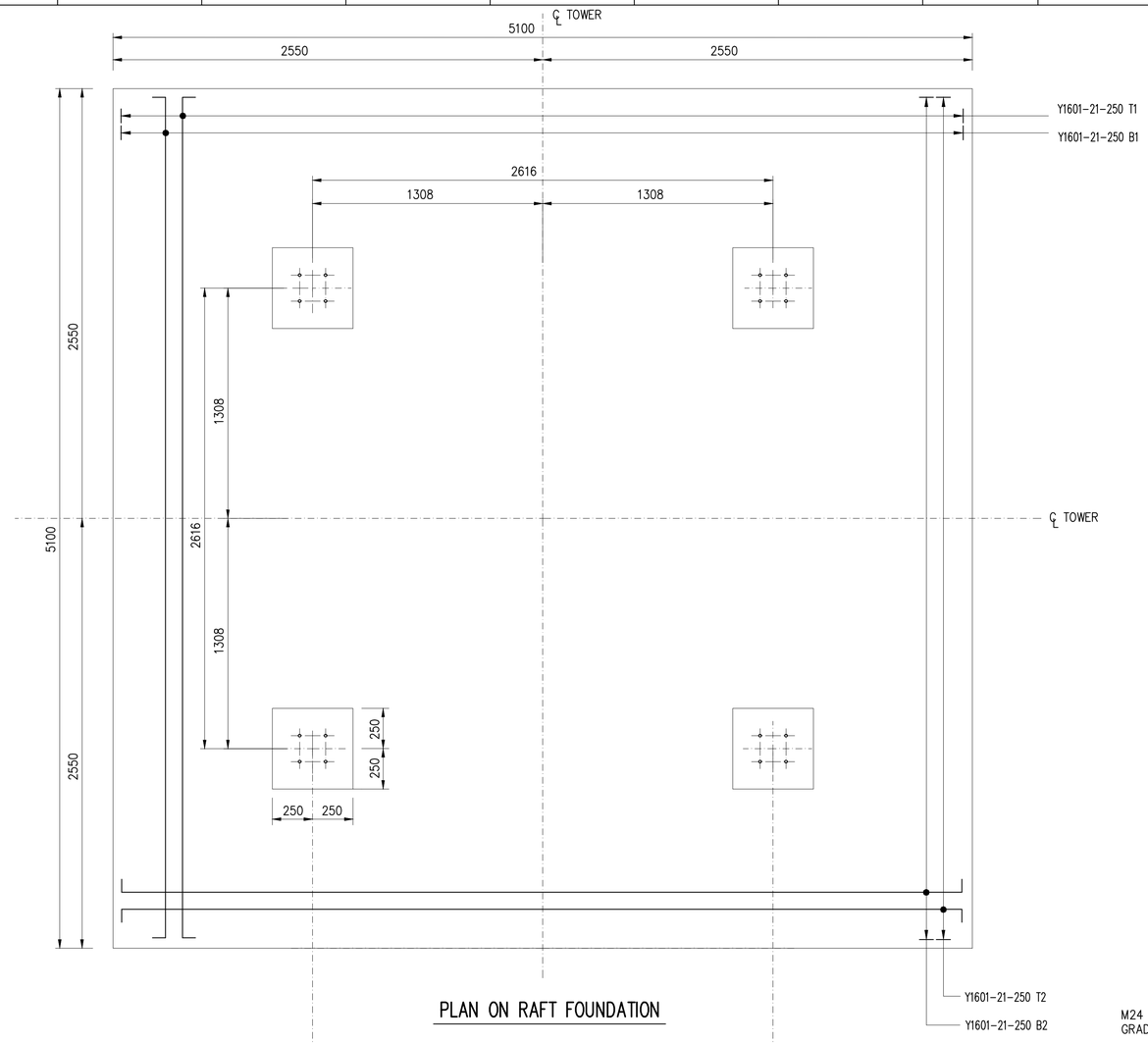

PLAN ON RAFT FOUNDATION

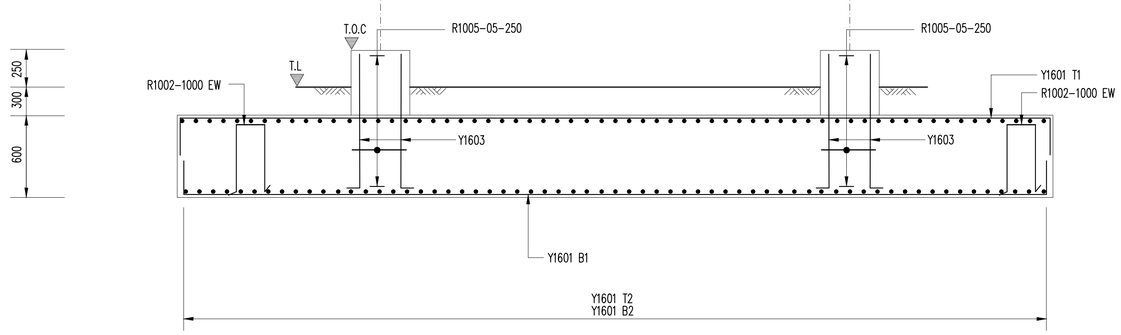

SECTION ON RAFT FOUNDATION

ITEM AND No OFF	Y or R	DIA.	MK.	BARS No OFF PER ITEM	BARS No OFF TOTAL	CUTTING LENGTH mm	TOTAL LENGTH m	SHAPE CODE	STANDARD SHAPES BENDING DIMENSIONS mm A	B	C	D	E	R
1	Y	16	01	84_	84	5150		38_	125_	4950	____	____	____	____
	R	10	02	25_	25_	1810		83_	450_	420_	300_	300_	____	____
	Y	16	03	8_	32_	1240		37_	250	1025_	____	____	____	____
	_	__	04	___	_NOT	USED_		___	____	____	____	____	____	____
	R	10	05	5_	20_	1740		60_	400_	400_	____	____	____	____
										____	____	____	____	____
											____	____	____	____
	_	__		___				___	____	____	____	____	____	____
	_	__	__	___	___	____		___	____	____	____	____	____	____
	_	__	__	___	___	____		___	____	____	____	____	____	____

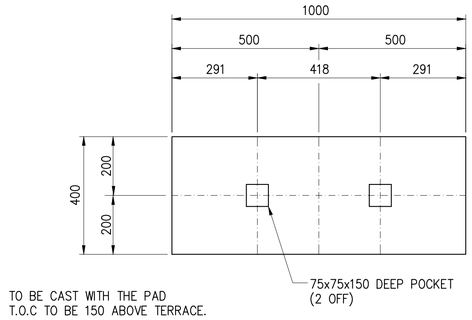

TO BE CAST WITH THE PAD
T.O.C TO BE 150 ABOVE TERRACE.

PLAN ON LADDER BASE

1:10

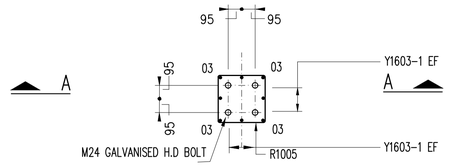

PLAN ON H.D BOLTS AND REINFORCEMENT

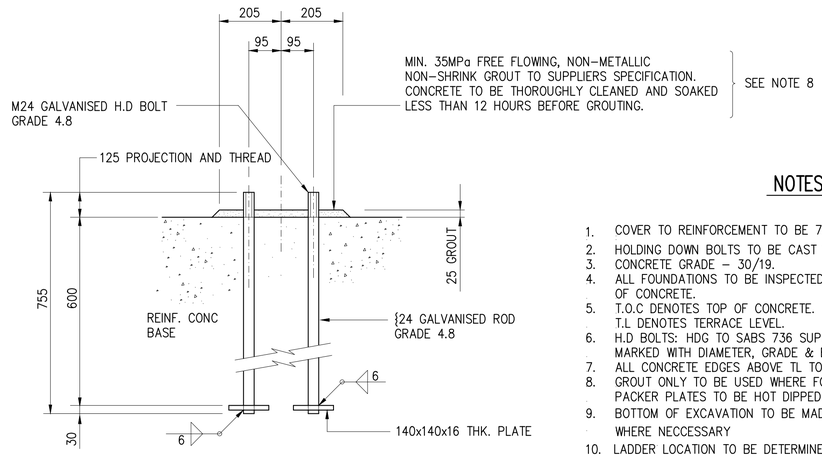

SECTION A-A

DETAIL - H.D BOLTS

NOTES

1. COVER TO REINFORCEMENT TO BE 75mm FOR PAD AND 50mm FOR COLUMN .
2. HOLDING DOWN BOLTS TO BE CAST WITH STEEL TEMPLATES.
3. CONCRETE GRADE - 30/19.
4. ALL FOUNDATIONS TO BE INSPECTED BY ESKOM ENGINEER PRIOR TO CASTING OF CONCRETE.
5. T.O.C DENOTES TOP OF CONCRETE.
   T.L DENOTES TERRACE LEVEL.
6. H.D BOLTS: HDG TO SABS 736 SUPPLIED WITH NUTS AND WASHERS, CLEARLY MARKED WITH DIAMETER, GRADE & BASE TYPE.
7. ALL CONCRETE EDGES ABOVE TL TO HAVE 20x 20 CHAMFERS.
8. GROUT ONLY TO BE USED WHERE FOUNDATIONS ARE NOT LEVEL.
   PACKER PLATES TO BE HOT DIPPED GALVANISED.
9. BOTTOM OF EXCAVATION TO BE MADE NEAT AND FILLED WITH 10MPA MASS CONCRETE WHERE NECCESSARY
10. LADDER LOCATION TO BE DETERMINED ON SITE

REV	AUTH MAG	DATE DATUM	REVISION/REVISIES INDEX REF./INDEKSVERW	BY DEUR	CHKD NAGES	REFERENCE DRAWINGS VERWYSINGSTEKENINGE
0	SD	May 23	FIRST ISSUE / EERSTE UITREIKING			15m TOWER OUTLINE.
					0.53/_	

DRG.TEK REGISTR ____ ____

CHKD NAGES SD MAY_ 2023

DRAWN GETEKEN SD MAY_ 2023

SCALE SKAAL AS_SHOWN

ESKOM

15m_MICROWAVE_TOWER__

PARADISE_FOUNDATION___
LAYOUT_AND_DETAILS_____

APPROVED S._DUBAZANA__ 24.05.2023

GOEDGEKEUR

0.53/15m PAR

REV 0_

SIZE GROOTTE A1L

THIS DRAWING HAS BEEN CREATED ON A C.A.D. SYSTEM AND ANY AMENDMENT TO THE DRAWING MUST BE EFFECTED ONLY ON THE C.A.D. SYSTEM.