	DIA LEFT	DIA RIGHT	DIA BRANCH 1	DIA BRANCH 2	END LEFT	END RIGHT	END BRANCH 1	END BRACH 2	BEND ANGLE	BEND RADIUS	FITTING MATERIAL	FITTING CLASS	INTERNAL LINING SPEC.	EXTERNAL COATING SPEC.	DRILL TABLE	ANCILLARY DESCRIPTION
BENDS																
B1	160	160			SOCKETED	SPIGOT			11.25		uPVC	Class 12				
B2	160	160			SOCKETED	SPIGOT			45		uPVC	Class 12				
B3	160	160			SOCKETED	SPIGOT			90		uPVC	Class 12				
B4	110	110			SOCKETED	SPIGOT			11.25		uPVC	Class 12				
B5	110	110			SOCKETED	SPIGOT			22.5		uPVC	Class 12				
B6	110	110			SOCKETED	SPIGOT			45		uPVC	Class 12				
B7	110	110			SOCKETED	SPIGOT			90		uPVC	Class 12				
B8	90	90			SOCKETED	SPIGOT			11.25		uPVC	Class 12				
B9	90	90			SOCKETED	SPIGOT			22.5		uPVC	Class 12				
B10	90	90			SOCKETED	SPIGOT			45		uPVC	Class 12				
B11	90	90			SOCKETED	SPIGOT			90		uPVC	Class 12				
B36	50	50							11.25		HDPE PE100	PN12.5				
B37	50	50							22.5		HDPE PE100	PN12.5				
B38	50	50							45		HDPE PE100	PN12.5				
B39	40	40							11.25		HDPE PE100	PN12.5				
B41	40	40							45		HDPE PE100	PN12.5				
B43	32	32							22.5		HDPE PE100	PN12.5				
B44	32	32							45		HDPE PE100	PN12.5				
B45	32	32							11.25		HDPE PE100	PN12.5				
B46	63	63							11.25		HDPE PE100	PN12.5				
B47	63	63							22.5		HDPE PE100	PN12.5				
B48	63	63							45		HDPE PE100	PN12.5				
ELBOWS																
EB1	32	32			COMPRESSION	COMPRESSION			90		HDPE PE100	PN 12.5				COMPRESSION FITTING
EB2	50	50			COMPRESSION	COMPRESSION			90		HDPE PE100	PN 12.5				COMPRESSION FITTING
EB3	63	63			COMPRESSION	COMPRESSION			90		HDPE PE100	PN 12.5				COMPRESSION FITTING
EB4	40	40			COMPRESSION	COMPRESSION			90		HDPE PE100	PN 12.5				COMPRESSION FITTING
END CAPS																
EC10	50				BUTTWELD	BUTTWELD						PN12.5				
EC11	40				BUTTWELD	BUTTWELD						PN12.5				
EC12	32				BUTTWELD	BUTTWELD						PN12.5				
EC13	63				BUTTWELD	BUTTWELD						PN12.5				
EC14	75				BUTTWELD	BUTTWELD						PN12.5				
EC15	90				BUTTWELD	BUTTWELD						PN12.5				
VALVE CHAMBER																
GV1																VALVE CHAMBER AS PER DETAIL 0.84/27289/2
GV2																VALVE CHAMBER AS PER DETAIL 0.84/27289/1
GV4																VALVE CHAMBER AS PER DETAIL 0.84/27289/6
VALVES																
V1	80	80			FLANGED	FLANGED					DUCTILE IRON	PN16				RESILIENT SEAL GATE VALVE, NON-RISING SPINDLE AND ANTI-CLOCKWISE
BV1	32	32														
BV2	50	50														
BV4	50	50														
BV5	63	63														
FLANGE ADAPTERS																
FA2	90				FLANGED	SOCKETED						PN12.5				FOR PVC
FA3	110				FLANGED	SOCKETED						PN12.5				FOR PVC
FA4	160				FLANGED	SOCKETED						PN12.5				FOR PVC
FA7	200				FLANGED	SOCKETED						PN12.5				FOR PVC
FA10	50	50			FLANGED	COMPRESSION										COMPRESSION FLANGE ADAPTER
FA11	90	80			FLANGED	COMPRESSION										COMPRESSION FLANGE ADAPTER
FA12	50	50			FLANGED	SOCKETED										FOR PVC
FA13	63	63			FLANGED	COMPRESSION										
SADDLES																
SD1	90		*50								CAST IRON	CLASS 16				
SD3	90		*40								CAST IRON	CLASS 16				
SD4	90		*32								CAST IRON	CLASS 16				* DENOTES MALE COMPRESSION ADAPTOR NOMINAL DIAMETER. THREADING TO BE 1.5"
SD5	110		*32								CAST IRON	CLASS 16				
REDUCER																
R6	110	90			SOCKETED	SPIGOT					uPVC	CLASS 12				
R9	160	110			SOCKETED	SPIGOT					uPVC	CLASS 12				
R10	160	90			SOCKETED	SPIGOT					uPVC	CLASS 12				
R19	50	32			COMPRESSION	COMPRESSION					HDPE PE100	PN12.5				
R20	50	40			COMPRESSION	COMPRESSION					HDPE PE100	PN12.5				
R23	63	50			COMPRESSION	COMPRESSION					HDPE PE100	PN 12.5				
R29	90	75			COMPRESSION	COMPRESSION					HDPE PE100	PN12.5				
R30	90	50			SOCKET	SPIGOT					uPVC	CLASS 12				
R31	90	63			SOCKET	SPIGOT					uPVC	CLASS 12				
TEES																
T22	110	110	110		SOCKET	SOCKET					CAST IRON	CLASS 16				
T23	110	110	90		SOCKET	SOCKET					CAST IRON	CLASS 16				
T24	90	90	90		SOCKET	SOCKET					CAST IRON	CLASS 16				
T26	50	50	50		BUTTWELD	BUTTWELD					HDPE PE100	PN12.5				
T27	40	40	40		BUTTWELD	BUTTWELD					HDPE PE100	PN12.5				
T28	50	50	32		BUTTWELD	BUTTWELD					HDPE PE100	PN12.5				
T29	32	32	32		BUTTWELD	BUTTWELD					HDPE PE100	PN12.5				
T32	63	63	32		BUTTWELD	BUTTWELD					HDPE PE100	PN12.5				
T33	63	63	50		BUTTWELD	BUTTWELD					HDPE PE100	PN12.5				
T34	63	63	63		BUTTWELD	BUTTWELD					HDPE PE100	PN12.5				
T15	160	160	160		SOCKET	SOCKET					CAST IRON	CLASS 16				
SPECIAL FLANGE ADAPTORS																
SF1	200	32			FLANGED	COMPRESSION										SEE DETAIL 1
SF2	90	50			FLANGED	COMPRESSION										SEE DETAIL 1
SF3	50	50			FLANGED	COMPRESSION										
SF4	63	50			FLANGED	COMPRESSION										
SF5	100	63			FLANGED	COMPRESSION										

5

NOTE:

FITTING LIST IS FOR INDICATIVE PURPOSES ONLY, THE CONTRACTOR TO ORDER MATERIALS FROM DRAWINGS.

SPECIAL FLANGE ADAPTORS TABLE

DESCRIPTION	DIAMETER (A)	DIAMETER (D)	DRILL SIZE (B)	FLANGE DESCRIPTION
SF1	200	32	1.5"	SANS 1123
SF2	90	50	2"	SANS 1123
SF3	50	50	2"	SANS 1123
SF4	63	50	2"	SANS 1123

FOR CONSTRUCTION

KKS CODES

KKS STRUCTURE CODE FOR ADMIN OFFICES:	00UYC
KKS STRUCTURE CODE FOR CANTEEN:	00UYD
KKS STRUCTURE CODE FOR FIRE STATION:	00UYP
KKS STRUCTURE CODE FOR FACILITIES S/S:	01UBU
KKS STRUCTURE CODE FOR FILLING STATION:	00UYS
KKS STRUCTURE CODE FOR SUBSTATION NORTH:	00UBV
KKS STRUCTURE CODE FOR GARAGE AND STORES:	00UYQ
KKS STRUCTURE CODE FOR WORKSHOP AND STORES:	00UST
KKS STRUCTURE CODE FOR WORKSHOP AND STORES S/S:	02UBU
KKS STRUCTURE CODE FOR WATER TREATMENT PLANT:	00UGD
KKS STRUCTURE CODE FOR STATION SERVICES:	00UGB
KKS STRUCTURE CODE FOR LABORATORY:	00USV
KKS STRUCTURE CODE FOR ACCESS CONTROL:	00UYF
KKS STRUCTURE CODE FOR MEDICAL STATION:	00UYJ
KKS PROCESS CODE FOR ADMIN OFFICES FIRE WATER:	00SGA62
KKS PROCESS CODE FOR CANTEEN FIRE WATER:	00SGA60
KKS PROCESS CODE FOR FIRE STATION FIRE WATER:	00SGA60
KKS PROCESS CODE FOR FACILITIES S/S FIRE WATER:	00SGA52
KKS PROCESS CODE FOR FILLING STATION FIREWATER:	00SGA61
KKS PROCESS CODE FOR SUBSTATION NORTH FIREWATER:	00SGA60
KKS PROCESS CODE FOR GARAGE AND STORES FIREWATER:	00SGA61
KKS PROCESS CODE FOR WORKSHOP AND STROES S/S:	00SGA60
KKS PROCESS CODE FOR WTP FIRE WATER:	00SGA40
KKS PROCESS CODE FOR SSB FIRE WATER:	00SGA49
KKS PROCESS CODE FOR LABORATORY FIRE WATER:	00SGA40
KKS PROCESS CODE FOR ACCESS CONTROL FIRE WATER:	00SGA54
KKS STRUCTURE CODE FOR SUB-STATION	
U1 AIR COOLED CONDENSER S/S:	10UBR
U2 AIR COOLED CONDENSER S/S:	20UBR
U3 AIR COOLED CONDENSER S/S:	30UBR
U4 AIR COOLED CONDENSER S/S:	40UBR
U5 AIR COOLED CONDENSER S/S:	50UBR
U6 AIR COOLED CONDENSER S/S:	60UBR
COAL PLANT S/S:	00UBS
COAL SILO S/S:	01UBS
COAL STOCKYARD NORTH S/S:	02UBS
COAL STOCKYARD SOUTH S/S:	04UBS
ASH DUMP S/S:	05UBS
BULK FUEL OIL PLANT S/S:	07UBS
TRANSVERSE ASH CONVEYER S/S:	06UBS
ASH CONDITIONING PLANT S/S:	08UBS
U1 FABRIC FILTER PLANT SUBSTATION:	10UBS
U2 FABRIC FILTER PLANT SUBSTATION:	20UBS
U3 FABRIC FILTER PLANT SUBSTATION:	30UBS
U4 FABRIC FILTER PLANT SUBSTATION:	40UBS
U5 FABRIC FILTER PLANT SUBSTATION:	50UBS
U6 FABRIC FILTER PLANT SUBSTATION:	60UBS
ACCESS CONTROL S/S:	00UBU
FACILITIES SUBSTATION:	01UBU
WORKSHOP AND STORES S/S:	02UBU
COMPRESSOR HOUSE NORTH S/S:	04UBU
COMPRESSOR HOUSE SOUTH S/S:	05UBU
WTP S/S:	06UBU
HYDROGEN AND NITROGEN PLANT S/S:	07UBU
SEWAGE TREATMENT PLANT S/S:	08UBU
U1 CPP S/S:	10UBU
U2 CPP S/S:	20UBU
U3 CPP S/S:	30UBU
U4 CPP S/S:	40UBU
U5 CPP S/S:	50UBU
U6 CPP S/S:	60UBU
NORHT S/S:	00UBV
WEST S/S:	01UBV
SORBENT STORAGE S/S:	02UBV
COMMON FGD S/S:	03UBV
RAW WATER HOUSE S/S:	04UBV
SEWAGE PLANT PUMP HOUSE S/S:	05UBV
MCC S/S BUILDING:	06UBV
U1 FGD S/S:	10UBW
U2 FGD S/S:	20UBW
U3 FGD S/S:	30UBW
U4 FGD S/S:	40UBW
U5 FGD S/S:	50UBW
U6 FGD S/S:	60UBW

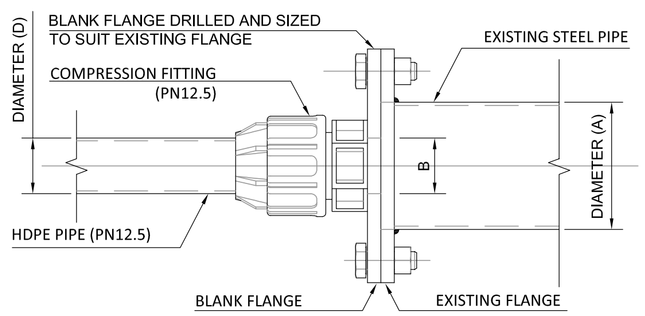

DETAIL 1: FLANGE ADAPTOR (SF)

REV	DATE	** REVISION ** INDEX REFERENCE:	REV BY	CHKD BY	AUTH BY	KKS APP	REFERENCE DRAWINGS
5	03/12/2013	FITTINGS ADDED	PN	CM	LJ		
4	21/11/2013	FITTINGS ADDED	DM	CM	LJ		
3	15/10/2013	FITTINGS ADDED	DM	CM	LJ		
2	27/06/2013	FITTING LIST AMMENDED; KKS CODES ADDED FITTING DETAIL AMMENDED	RE	CM	LJ		
1	11/10/2012	KKS CODE ADDED, QUANTITIES COLUMN CANCELLED, FITTING LIST AMMENDED	PS	CM	LJ		
0	25/07/2011	ISSUED FOR CONSTRUCTION	TPM	LJ	FdL		

D.O.			AUTHORISED FOR ESKOM BY	DATE
DRG REGISTER				
DESIGN APPROVED	22/07/2011	LJ	C BESSIT	22/07/2011
KKS APP				
DO AUTH	22/07/2011	LJ		
CHKD BY	22/07/2011	LJ		
DRAWN BY	22/07/2011	TPM		
SCALE	1:10			

Nyeleti
2 Lynwood Galleries
354 Rosemary Road
Lynwood, Tshwane
Tel: (012) 361 3629
Fax: (012) 361 3625

Eskom

MEDUPI POWER STATION
ADMIN ISLAND, SUBSTATIONS SSB,WTP,LAB & ACCESS CONTROL (P8 & P35)
POTABLE WATER FITTINGS LIST

14031 - C - 194

0.84 / 7258

SHEET 28 REV 5

SIZE GROOTTE A1L