CONSTRUCTION OF STORMWATER CHANNEL AT RIVERSIDE, REPLACEMENT OF STORMWATER ARMCO PIPES WITH CONCRETE PIPES AT WEST ACRES AND REPLACEMENT OF BOX CULVERT AT STONEHENGE FOR THE CITY OF MBOMBELA

BOOK OF DRAWINGS

ISSUED FOR TENDER

Client:

1 Nel Street
Mbombela
1200

Consultant:

15 Russel Street
Nelspruit
1200

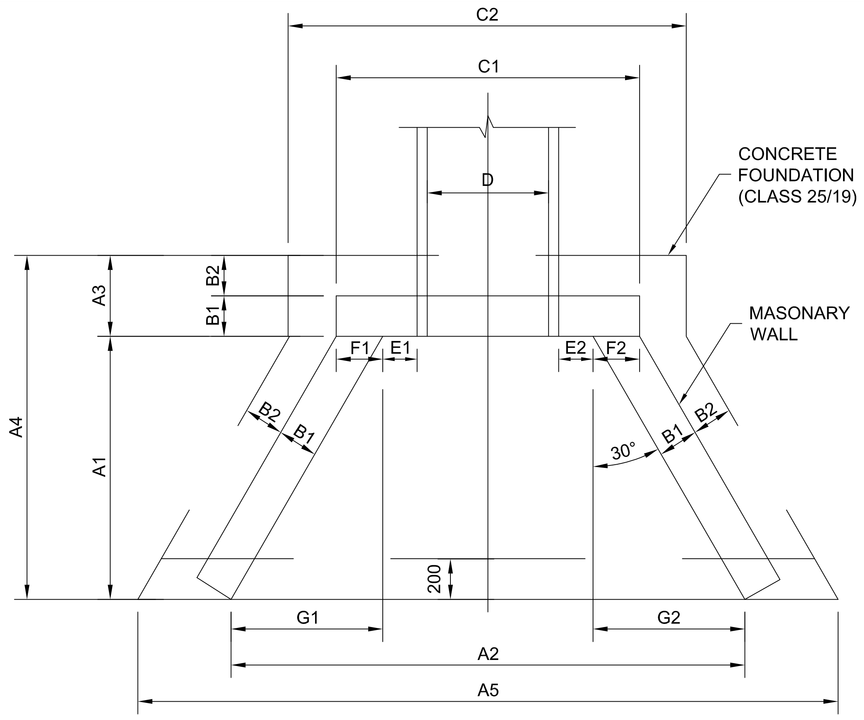

TYPICAL PLAN OF
INLET/OUTLET WINGWALLS : 90°
N.T.S

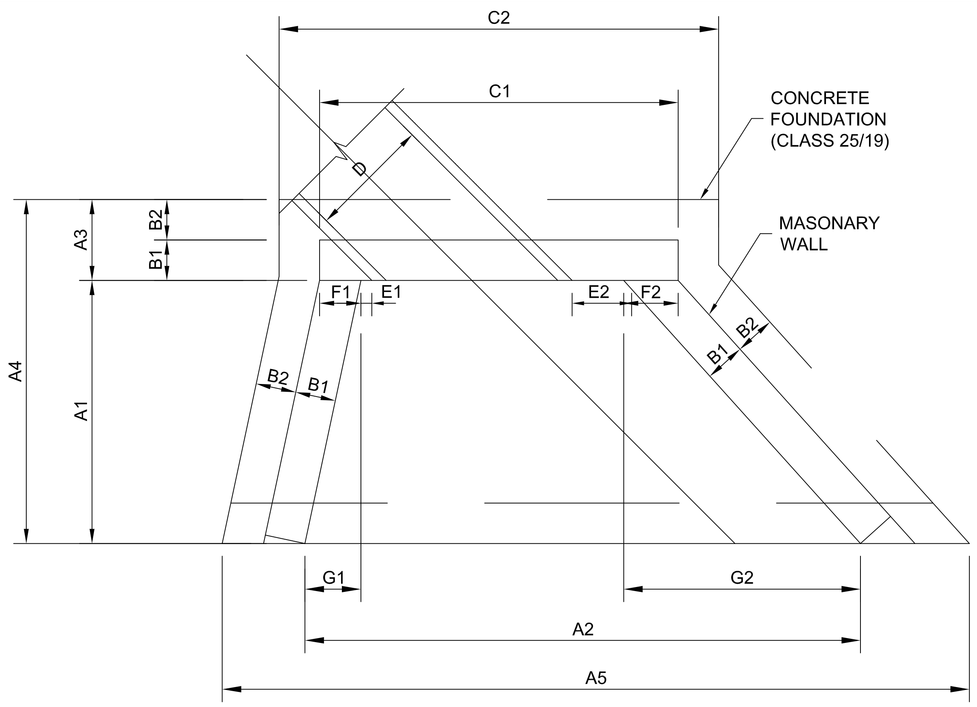

TYPICAL PLAN OF
INLET/OUTLET WINGWALLS :MAX 30°
N.T.S

	CULVERT REFERENCE NUMBER		ROAD - 1	
CULVERT DESCRIPTION	ROAD KILOMETER DISTANCE & ROUTE		CH 0+350	
	TYPE		P	
	BARRELS / TOTAL UNITS	NUMBER	1	
	EXISTING CULVERT SIZE		N/A	
	NEW SPAN / DIAMETER	mm	600	
	NEW HEIGHT	mm	N/A	
	CULVERT CLASS		100D	
	BEDDING CLASS		B	
	INLET STRUCTURE		Field inlet	
	CONSTRUCTION ACTION		NEW	
	SKEW ANGLE	DEGREES	90	
HYDROLOGICAL DATA	CATCHMENT AREA	ha	1.94	
	TIME OF CONCENTRATION	min	15.44	
	RAINFALL INTENSITY	mm/h	127.72	
	CATCHMENT DISCHARGE AT INLET	m³/s	0.145	
INLET/OUTLET WINGWALLS, CONCRETE DIMENSIONS	A1	mm	1020	
	A2	mm	2290	
	A3	mm	350	
	A4	mm	1370	
	A5	mm	3100	
	B1	mm	230	
	B2	mm	120	
	C1	mm	1640	
	C2	mm	1880	
	D	mm	600	
	E1	mm	200	
	E2	mm	200	
	F1	mm	266	
	F2	mm	266	
	G1	mm	590	
	G2	mm	590	
	H	mm	950	

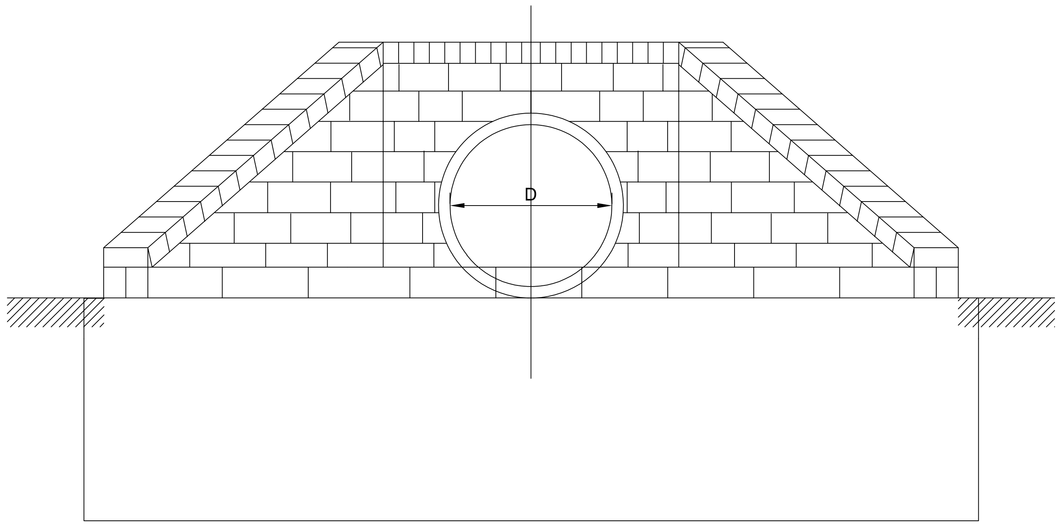

TYPICAL ELEVATION OF
INLET/OUTLET WINGWALLS : 90°
N.T.S

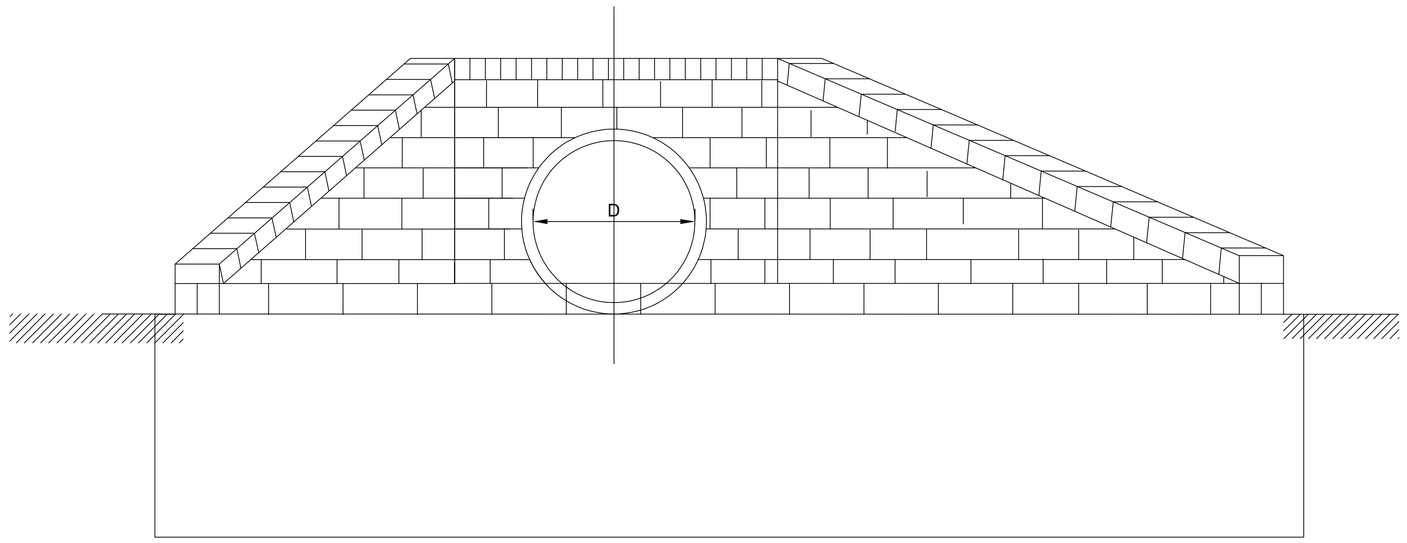

TYPICAL ELEVATION OF
INLET/OUTLET WINGWALLS : MAX 30°
N.T.S

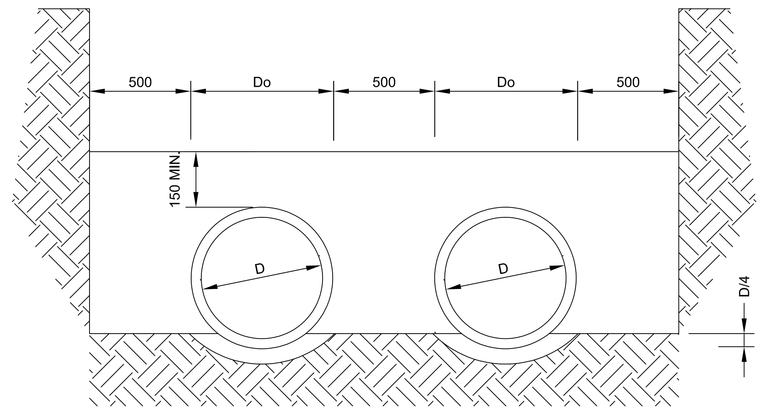

HORIZONTAL SPACING
OF MULTIPLE PIPES
SCALE 1 :10

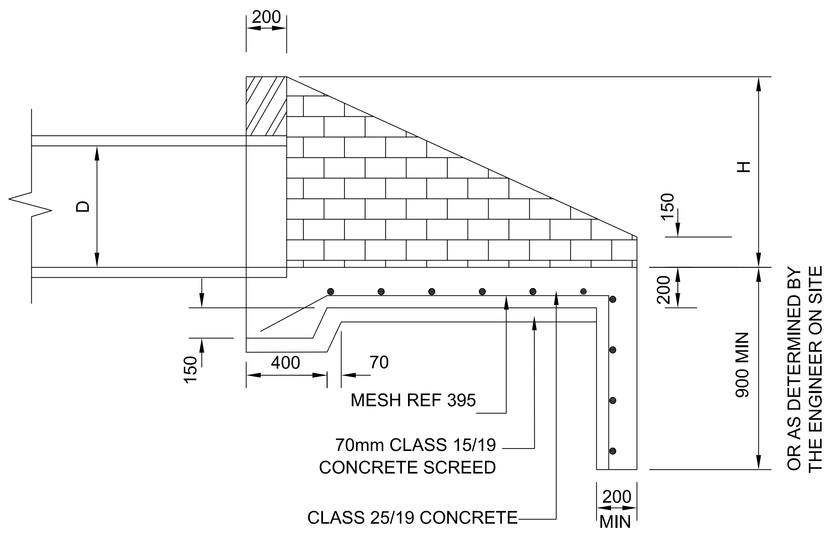

TYPICAL END ELEVATION OF
INLET/OUTLET WINGWALLS : 90°
N.T.S

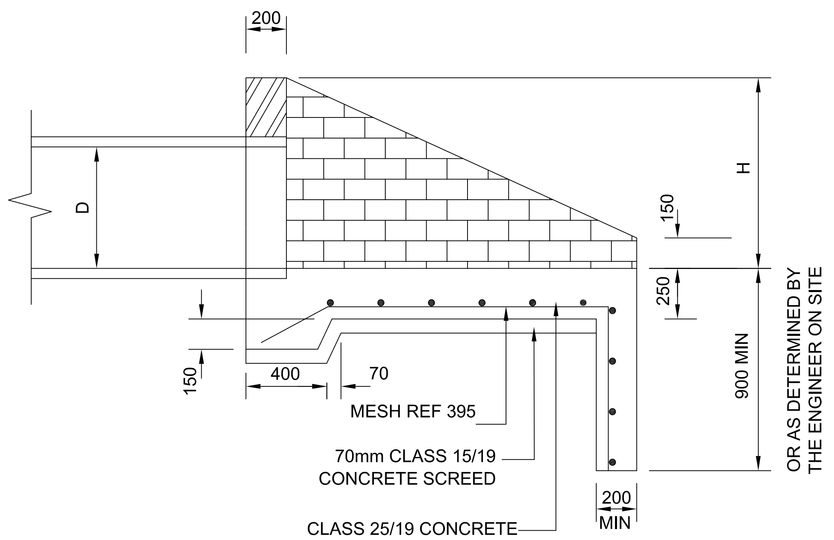

TYPICAL END ELEVATION OF
INLET/OUTLET WINGWALLS : MAX 30°
N.T.S

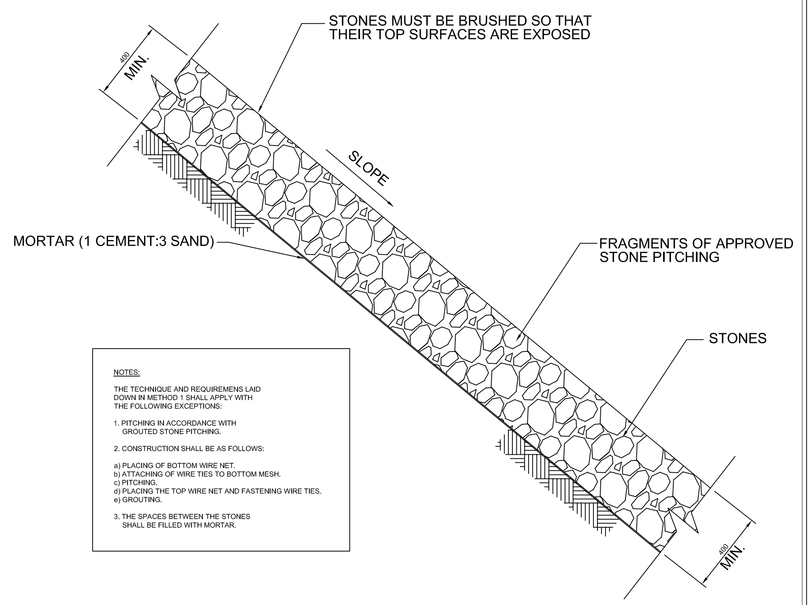

GROUTED STONE PITCHING
SCALE 1 :10

REV. NO	APPROVED	DATE	AMENDMENT
0	ER	06.2023	ISSUED FOR CONSTRUCTION

Client: CITY OF MBOMBELA — THE ULTIMATE DESTINATION

APPROVED	
COM. DRAWING NO.	
SIGNATURE	
DATE	

CITY OF MBOMBELA
Telephone : 013 759 2041
Facsimile : 013 759 2274
E-mail : N/A
Website : www.mbombela.gov.za
P. O. Box 45, Mbombela, 1200
1 Nel Street, Mbombela, 1200

Consultant: Appollo Engineering — CONSULTING ENGINEERS & PROJECT MANAGERS

APPOLLO ENGINEERING (Pty) Ltd
Telephone : 013 752 6187
Facsimile : 013 752 4199
E-mail : info@appollogroup.co.za
Website : www.appollogroup.co.za
P. O. Box 1108, White River, 1240
15 Russel Street, Nelspruit, 1200

Contractor:
Telephone : XXX XXX XXXX
Facsimile : XXX XXX XXXX
E-mail : xxxxxxxxxx@xxxxxl.xxx
Website :
xxx xxxx xxxxxx
XXXXXXXX
XXXX

Drawing Title: **PIPE CULVERT DETAILS**

Discipline: **CIVIL ENGINEERING**

Project Name: **CONSTRUCTION OF STORMWATER CHANNEL AT RIVERSIDE, REPLACEMENT OF STORMWATER ARMCO PIPES WITH CONCRETE PIPES AT WEST ACRES AND REPLACEMENT OF BOX CULVERT AT STONEHENGE FOR THE CITY OF MBOMBELA**

ONTWERP DEUR DESIGNED BY	N. SHABANGU	SKAAL / SCALE (at A0) 1:1 000	TIPE ONTWERP / TYPE OF DESIGN: TENDER
NAGESIEN DEUR CHECKED BY	G. MARIMBITA		
GETEKEN DEUR DRAWN BY	N. SHABANGU	DATE: JULY 2023	PLAN Nr / PLAN No: APPENG100-MTCE-C-TD-01
NAGESIEN DEUR CHECKED BY	E. RAMUSHU		REV: 0

0 10 20 30 40 50 60 70 80 90 100mm NATURAL SCALE

ORIGINAL DRAWING SIZE 1189 x 841

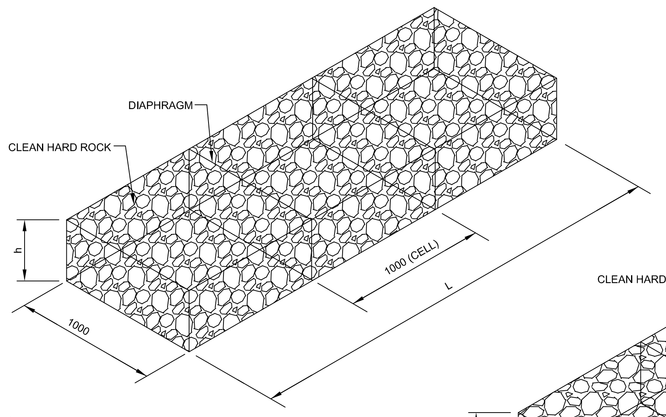

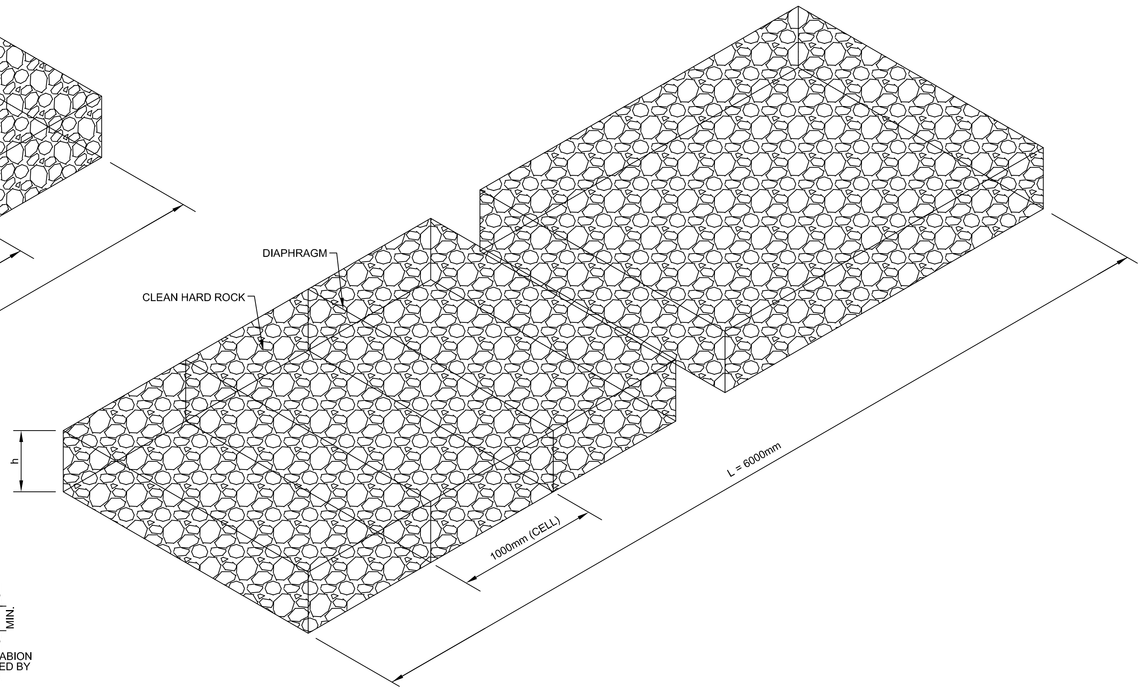

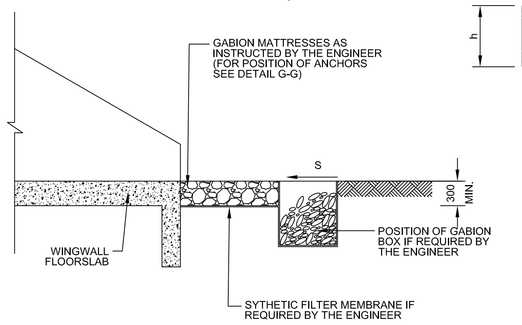

SECTION A-A

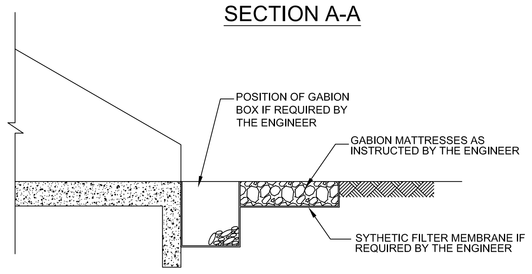

ALTERNATIVE SECTION A-A

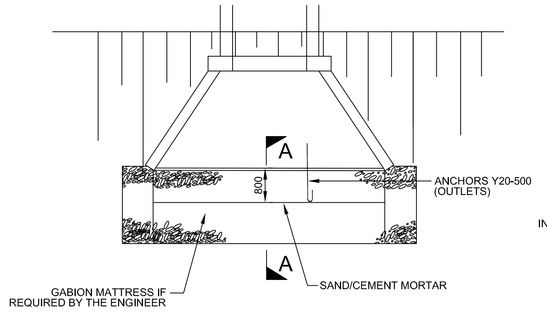

PLAN OF INLET/OUTLET

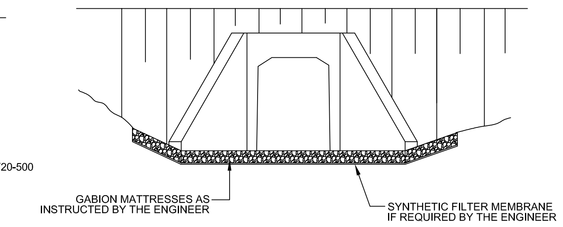

ELEVATION OF INLET/OUTLET

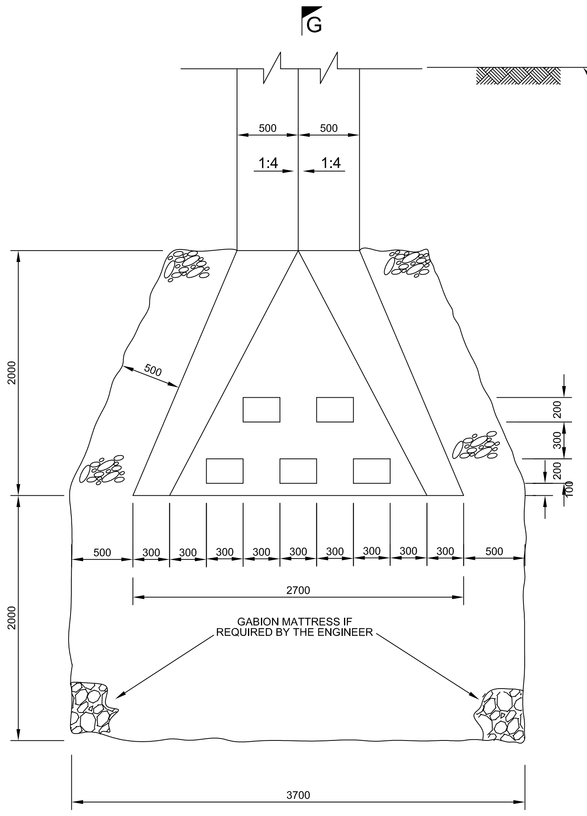

PLAN OF DOWN CHUTE AND ENERGY BREAKER

SCALE 1:25

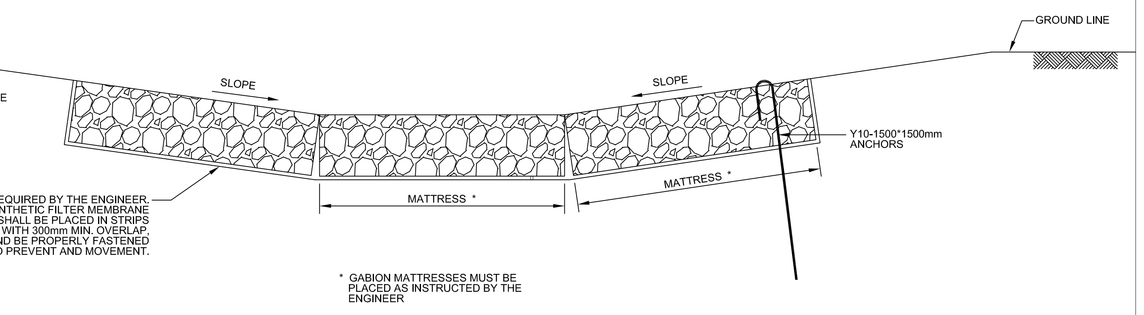

SECTION OF MATTRESS IN CANAL

SCALE 1:25

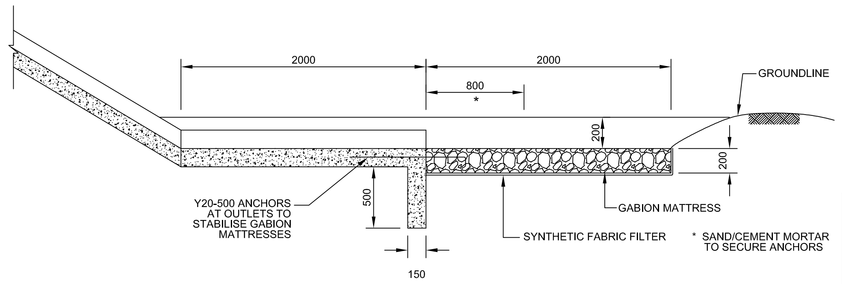

SECTION G-G

SCALE 1:25

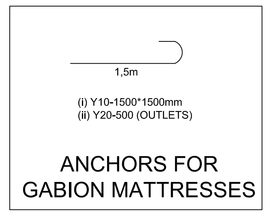

ANCHORS FOR GABION MATTRESSES

BOXES
STANDARD SIZES OF BOXES
LENGHT 1000mm, 2000mm, 3000mm, 4000mm
LENGHT 1000mm
DEPTH 300mm, 500mm, 1000mm
DIAPHRAGM SPACING 1000mm

ROCK SIZES FOR FILLING OF CAGES

DEPTH OF CAGES	ROCK SIZE (DIMENSIONS)	
	MAX. (mm)	MIN. (mm)
200	100	125
300	100	200
500	100	250
1000	100	300

MESH SIZE AND WIRE DIAMETER FOR CAGES

DEPTH OF GABION	MESH SIZE (mm)	WIRE DIA. (mm)
500mm AND OVER	80 x 100	2,7
200mm TO 300mm	80 x 100	2,7

MATTRESSES
STANDARD SIZES
LENGHT 6000mm
WIDTHT 2000mm
DEPTH 200mm, 300mm, 500mm

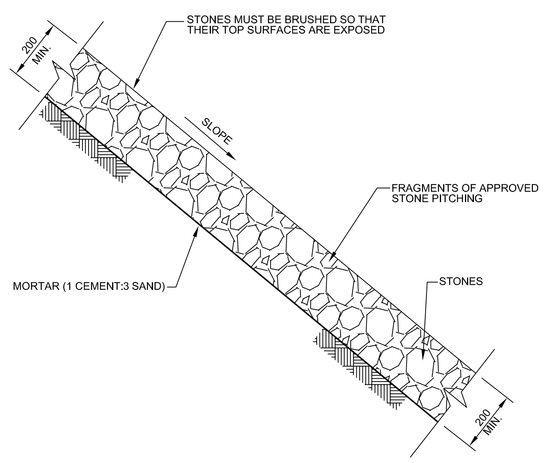

GROUTED STONE PITCHING

SCALE 1:10

NOTES:

THE TECHNIQUE AND REQUIREMENS LAID DOWN IN METHOD 1 SHALL APPLY WITH THE FOLLOWING:

1. THE SPACES BETWEEN THE STONES SHALL BE FILLED WITH MORTAR.

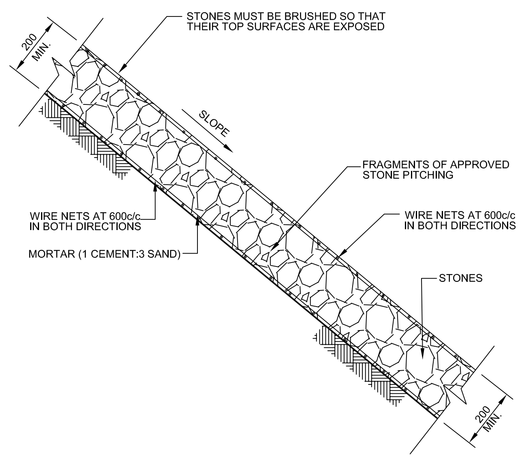

WIRE AND GROUTED STONE PITCHING

SCALE 1:10

NOTES:

THE TECHNIQUE AND REQUIREMENS LAID DOWN IN METHOD 1 SHALL APPLY WITH THE FOLLOWING EXCEPTIONS:

1. PITCHING IN ACCORDANCE WITH GROUTED STONE PITCHING.

2. CONSTRUCTION SHALL BE AS FOLLOWS:

a) PLACING OF BOTTOM WIRE NET.
b) ATTACHING OF WIRE TIES TO BOTTOM MESH.
c) PITCHING.
d) PLACING THE TOP WIRE NET AND FASTENING WIRE TIES.
e) GROUTING.

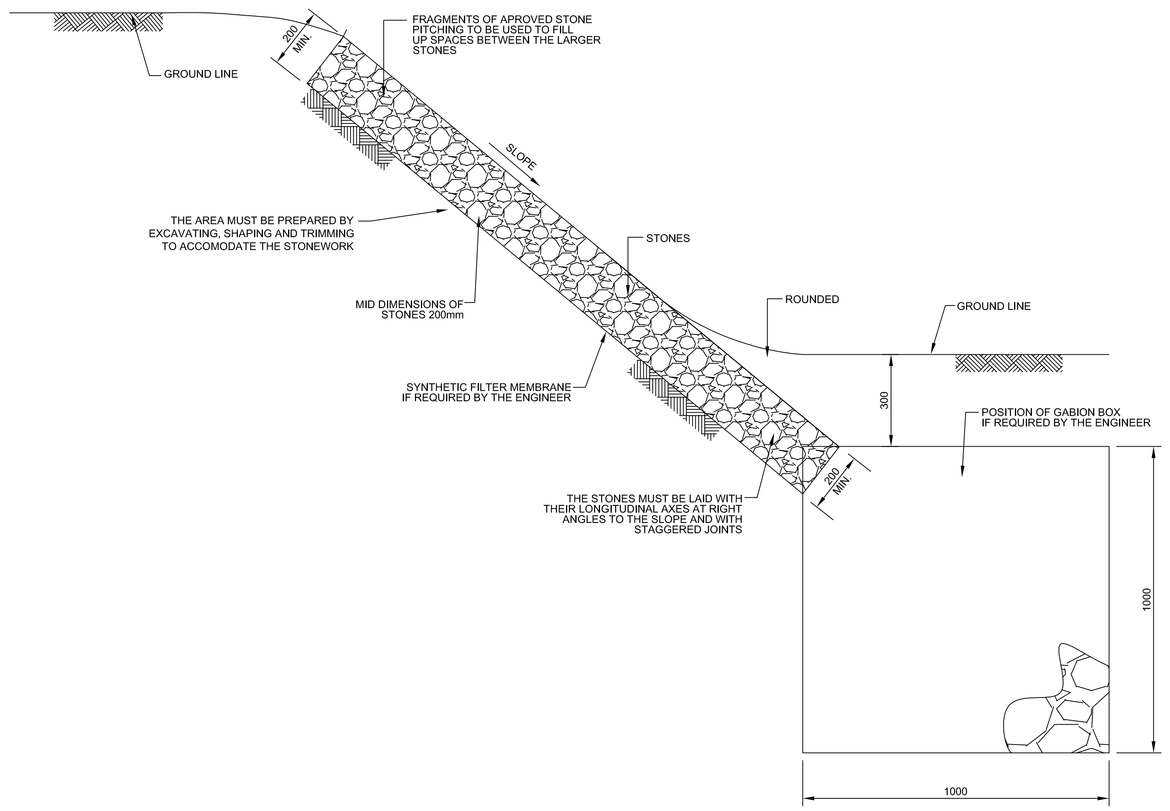

METHOD 1

SCALE 1:10

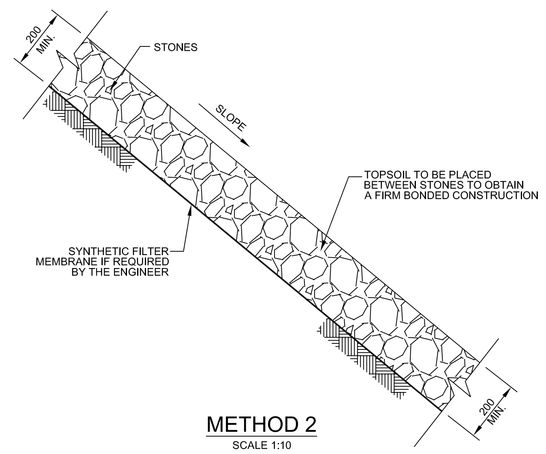

METHOD 2

SCALE 1:10

NOTES:

THE TECHNIQUE AND REQUIREMENS LAID DOWN IN METHOD 1 SHALL APPLY WITH THE FOLLOWING EXCEPTIONS:

1. NO SMALL STONES SHALL BE USED TO FILL THE SPACES BETWEEN THE LARGER STONES.

2. TOPSOIL SHALL BE INTRODUCED BETWEEN INDIVIDUAL STONES SIMULTANEOUSLY WITH PLACING OF STONES.

3. ROOTED GRASS OR GRASS TURTS SHALL THEN BE PLACED IN THE TOPSOIL.

PLAIN STONE PITCHING

REV. NO	APROVED	DATE	AMENDMENT
0	ER	07.2023	ISSUED FOR TENDER

Client: CITY OF MBOMBELA — THE ULTIMATE DESTINATION

APPROVED	
COM DRAWING NO.	
SIGNATURE	
DATE	

CITY OF MBOMBELA

Telephone : 013 759 2041
Facsimile : 013 759 2274
E-mail : N/A
Website : www.mbombela.gov.za
P. O. Box 45, Mbombela, 1200
1 Nel Street, Mbombela, 1200

Consultant: Appollo Engineering — CONSULTING ENGINEERS & PROJECT MANAGERS

APPOLLO ENGINEERING (Pty) Ltd

Telephone : 013 752 6187
Facsimile : 013 752 4199
E-mail : info@appollogroup.co.za
Website : www.appollogroup.co.za
P. O. Box 1108, White River, 1240
15 Russel Street, Nelspruit, 1200

Contractor:

Telephone : XXX XXX XXXX
Facsimile : XXX XXX XXXX
E-mail : xxxxxxxxx@xxxxx.xxx
Website :
xxx xxxx xxxxxx
XXXXXXXX
XXXX

Drawing Title: **TYPICAL STONE PITCHING AND GABIONS**

Discipline: **CIVIL ENGINEERING**

Project Name: **CONSTRUCTION OF STORMWATER CHANNEL AT RIVERSIDE, REPLACEMENT OF STORMWATER ARMCO PIPES WITH CONCRETE PIPES AT WEST ACRES AND REPLACEMENT OF BOX CULVERT AT STONEHENGE FOR THE CITY OF MBOMBELA**

ONTWERP DEUR DESIGNED BY	N. SHABANGU	SKAAL / SCALE (at A0) 1:1 000	TIPE ONTWERP / TYPE OF DESIGN: TENDER
NAGESIEN DEUR CHECKED BY	G. MARIMBITA		
GETEKEN DEUR DRAWN BY	N. SHABANGU	DATE: JULY 2023	PLAN Nr / PLAN No: **APPENG100-MTCE-C-TD-03**
NAGESIEN DEUR CHECKED BY	E. RAMUSHU		REV: 0

0 10 20 30 40 50 60 70 80 90 100mm NATURAL SCALE

ORIGINAL DRAWING SIZE 1189 x 841

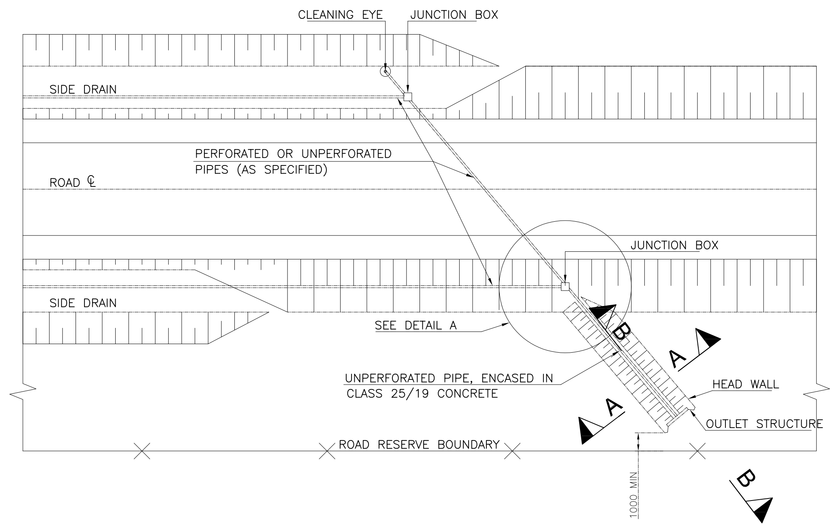

TYPICAL LAYOUT OF SUBSURFACE DRAINAGE

SCALE 1 : 200

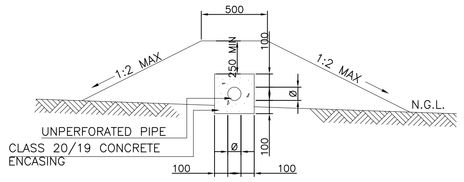

SECTION A-A

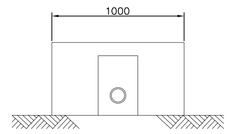

FRONT ELEVATION

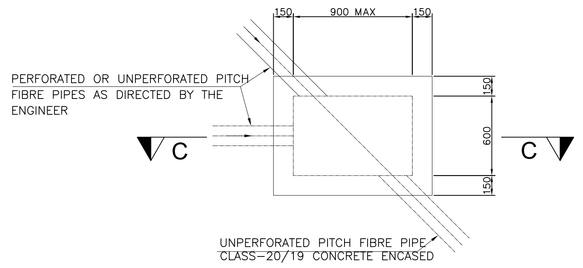

DETAIL A

SCALE 1:20

No.	DESCRIPTION
1	THIS DIMENSION MAY BE REDUCED TO A MIN. OF THE PIPE DIAMETER + 200mm, PROVIDED THAT THE SECTIONAL AREA IS ADEQUATE
2	IMPERMEABLE BACKFILL MATERIAL, (MIN 150mm THICK) TAKEN TO TOP OF WATER BEARING LAYER, OR CONCRETE LINING
3	FILTER SAND OF APPROVED SOURCE NATURAL PERMEABLE MATERIAL AND GRADE
4a 4b	FILTER STONE : FINE OR COARSE OF APPROVED SOURCE AND GRADE
5a 5b	PERFORATED SUBSURFACE PIPES (NEXTUBE DN110 OR SIMILAR APPROVED)
6a	BIDIM B4 FILTER MATERIAL OR SIMILAR APPROVED TYPE
6b	SYNTHETIC FIBRE FILTER FABRIC GRADE 2, CLASS A (BIDIM A4 OR APPROVED EQUIVALENT)
7	LEVEL TO WHICH SURROUNDING AREA IS TO BE DRAINED
8	EXTERNAL PIPE DIAMETER
9	WATER BEARING STRATA

1. SUBSURFACE DRAINS

1.1. WHERE THE SUBSURFACE DRAINS ARE PLACED IN SOLID ROCK THE POLYETHYLENE LINING IS UNNECESSARY

1.2. THE FINAL POSITIONS OF SUBSURFACE DRAINS WILL BE VERIFIED BY THE ENGINEER ON SITE AND ALTERED IF NECESSARY

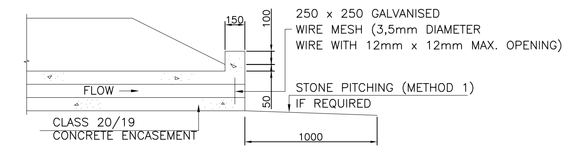

SECTION B-B

LONGITUDINAL-SECTION OF PIPE

TYPE A OUTLET STRUCTURE

SCALE 1:20

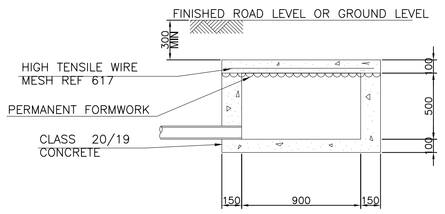

SECTION C-C

SCALE 1:20

CROSS-SECTION OF JUNCTION BOX

2. FILTER CRITERIA

A. "Dx" IS THE SIEVE SIZE WHERE x% OF THE FILTER MATERIAL WILL GO THROUGH
O_{90} (GF) = AVERAGE SIZE OR GAUGE OF OPENING IN THE SYNTHETIC FIBRE FILTER FABRIC

B. FILTER SAND (FS) IN RELATION TO WATER BEARING STRATA (WS):
1. WHEN D_{50}(WS) > 0.05mm:
(a)TO PREVENT BLOCKING OF FILTERSAND
D_{15}(FS) < $5xD_{85}$ (WS)
D_{50}(FS) < $25xD_{50}$(WS)
(b)FOR PERMEABILITY OF SAND
D_{15} (FS) < $5xD_{15}$ (WS)

2. WHEN D_{50}(WS) < 0.05mm :
(a)TO PREVENT BLOCKING OF FILTERSAND
D_{15}(FS) < 0.25mm
D_{50}(FS) > 0.075mm
(b)PERMEABILITY REQUIREMENTS UNNECESSARY

C. FILTER STONE (FSN) IN RELATION TO FILTER SAND (FS)
(a) TO PREVENT BLOCKING OF FILTER STONE
D_{15}(FK) < $5xD_{85}$ (FS)
D_{50}(FK) < $25xD_{50}$ (FS)
(b) PERMEABILITY: FILTER STONE MUST BE COARSER THAN SAND AT ALL PERCENTAGES

D. FILTER STONE (FSN) IN RELATION TO PERFORATIONS IN PIPE
D_{85} (FSN) > 1.2 x DIAMETER OF ROUND PERFORATIONS
D_{85} (FSN) > 1.2 x WIDTH OF SLOTS

E. SYNTHETIC FIBRE FILTER FABRIC (SF) IN RELATION TO FILTER SAND (FS)
(a)TO PREVENT CLOGGING OF SYNTHETIC FIBRE FILTER FABRIC
O_{90}(SF) < D (FS) $_{85}$
(b)FOR PERMEABILITY :
O_{90}(SF) > D (FS) $_{15}$

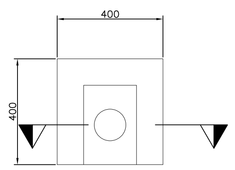

PLAN

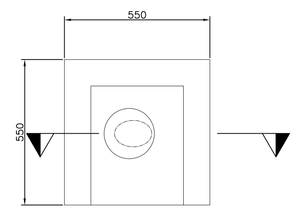

PLAN

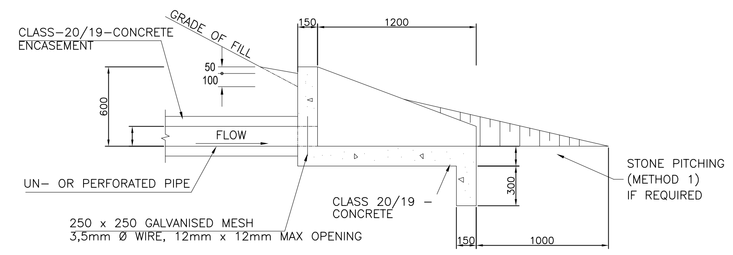

SECTION D-D

SCALE 1:20

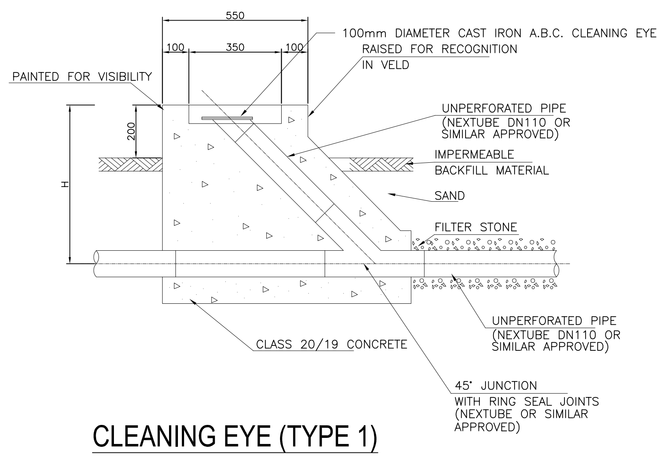

CLEANING EYE (TYPE 1)

(H < 1000)

SCALE 1:10

DETAIL OF TIPE B OUTLET

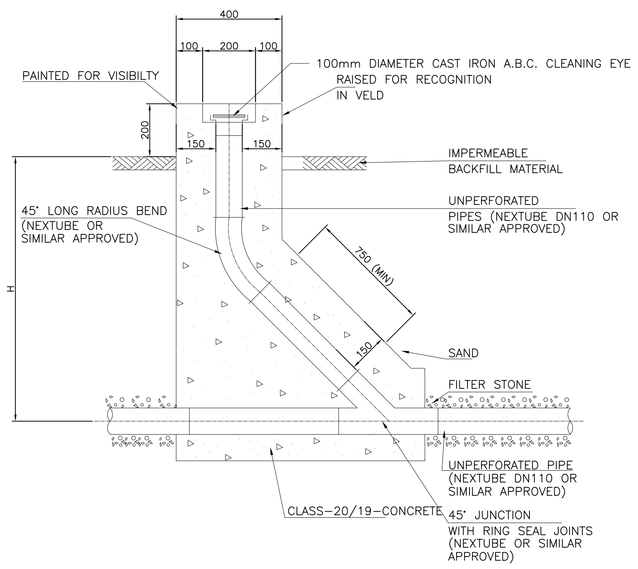

CLEANING EYE (TYPE 2)

(H > 1000)

SCALE 1:10

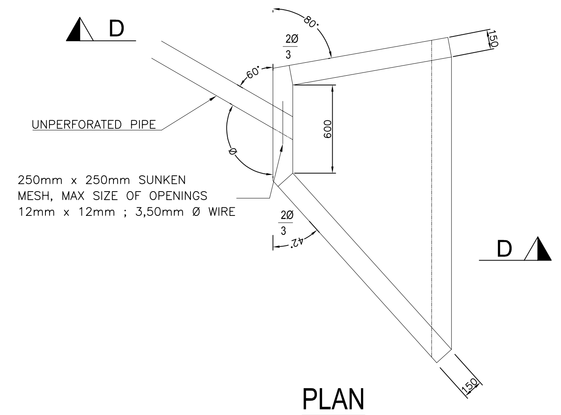

PLAN

SCALE 1:20

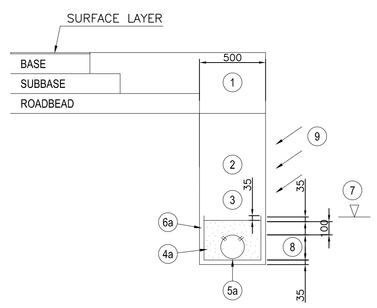

SUBSOIL DRAINAGE WITH POLYETHYLENE LINING

SCALE 1:20

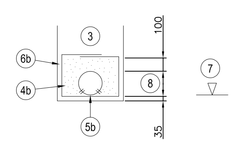

SUBSOIL DRAINAGE WITH SYNTHETIC FIBRE FILTER FABRIC

SCALE 1:20

3. CAST INSITU CONCRETE

3.1. CONCRETE TO BE CLASS 20/19.

3.2. CONCRETE TO BE CURED FOR A MINIMUM OF 7 DAYS.

3.3. ALL FORMED SURFACES SHALL HAVE A CLASS F3 SURFACE FINISH.

3.4. ALL UNFORMED SURFACES SHALL HAVE A CLASS U2 SURFACE FINISH.

REV NO	APPROVED	DATE	AMENDMENT
0	ER	07.2023	ISSUED FOR TENDER

Client: CITY OF MBOMBELA — THE ULTIMATE DESTINATION

CITY OF MBOMBELA
Telephone : 013 759 2041
Facsimile : 013 759 2274
E-mail : N/A
Website : www.mbombela.gov.za
P. O. Box 45, Mbombela, 1200
1 Nel Street, Mbombela, 1200

APPROVED	
COM DRAWING NO.	
SIGNATURE	
DATE	

Consultant: Appollo Engineering — CONSULTING ENGINEERS & PROJECT MANAGERS

APPOLLO ENGINEERING (Pty) Ltd
Telephone : 013 752 6187
Facsimile : 013 752 4199
E-mail : info@appollogroup.co.za
Website : www.appollogroup.co.za
P. O. Box 1108, White River, 1240
15 Russel Street, Nelspruit, 1200

Contractor:
Telephone : XXX XXX XXXX
Facsimile : XXX XXX XXXX
E-mail : xxxxxxxx@xxxxx.xxx
Website :
xxx xxxx xxxxxx
XXXXXXXX
XXXX

Drawing Title: **TYPICAL SUBSOIL DRAINAGE DETAILS**

Dilsicipline: **CIVIL ENGINEERING**

Project Name: **CONSTRUCTION OF STORMWATER CHANNEL AT RIVERSIDE, REPLACEMENT OF STORMWATER ARMCO PIPES WITH CONCRETE PIPES AT WEST ACRES AND REPLACEMENT OF BOX CULVERT AT STONEHENGE FOR THE CITY OF MBOMBELA**

ONTWERP DEUR DESIGNED BY	N. SHABANGU	SKAAL / SCALE (at A0)	TIPE ONTWERP / TYPE OF DESIGN
NAGESIEN DEUR CHECKED BY	G. MARIMBITA	1:1 000	TENDER
GETEKEN DEUR DRAWN BY	N. SHABANGU	DATE:	PLAN Nr / PLAN No: APPENG100-MTCE-C-TD-04
NAGESIEN DEUR CHECKED BY	E. RAMUSHU	JULY 2023	REV: 0

0 10 20 30 40 50 60 70 80 90 100mm NATURAL SCALE

ORIGINAL DRAWING SIZE 1189 x 841

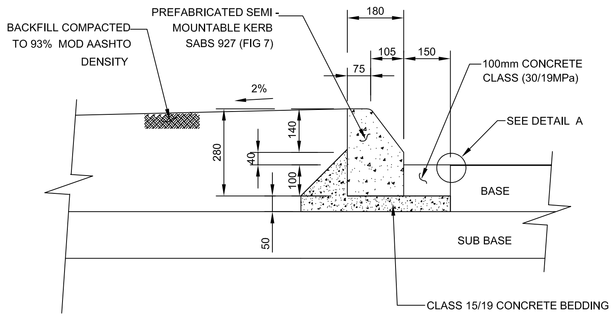

SEMI - MOUNTABLE KERB(FIG 7)

SCALE 1 : 10

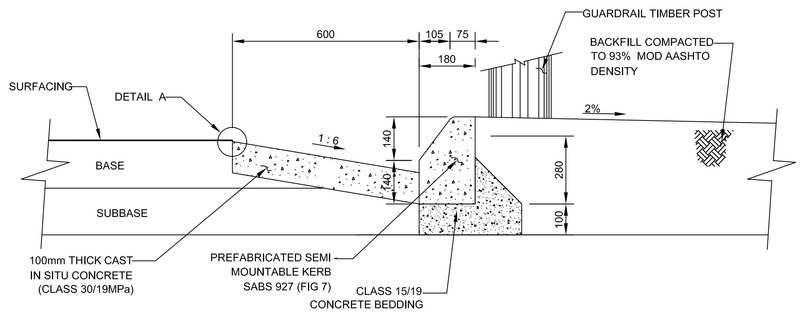

CONCRETE KERB AND CHANNEL COMBINATION

SCALE 1 : 10

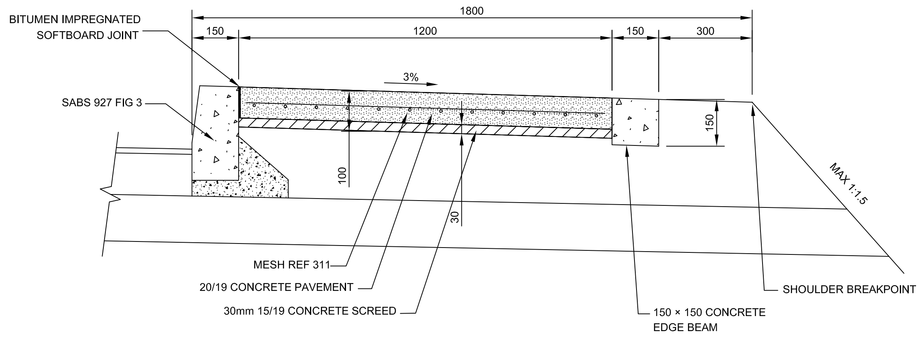

SEMI-MOUNTABLE KERB (FIG 3) AND CONCRETE PAVEMENT COMBINATION AT BUSBAYS

SCALE 1 : 10

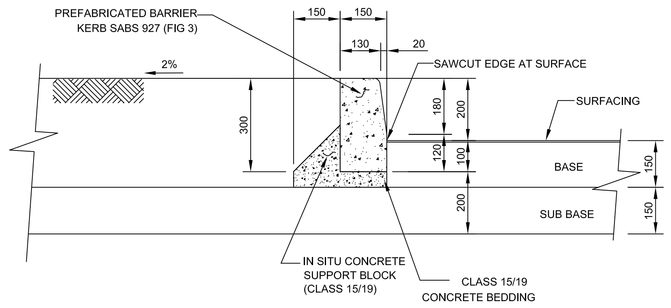

BARRIER KERB(FIG 3)

SCALE 1 : 10

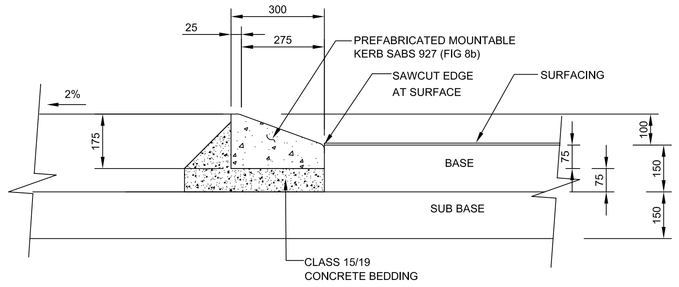

MOUNTABLE KERB (FIG 8b)

SCALE 1 : 10

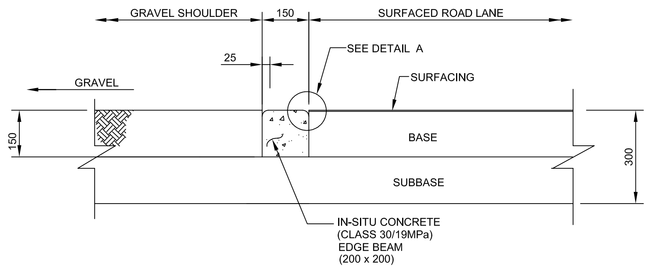

150x150 CONCRETE EDGE BEAM AT EDGE OF SURFACING

SCALE 1 : 10

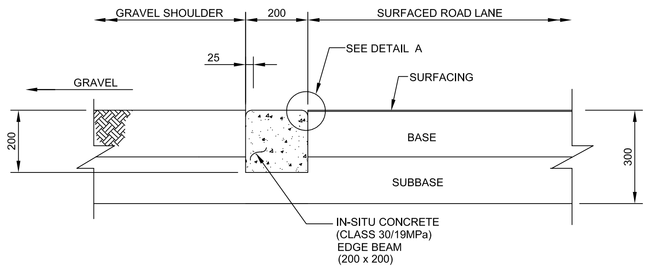

200x200 CONCRETE EDGE BEAM AT EDGE OF SURFACING

SCALE 1 : 10

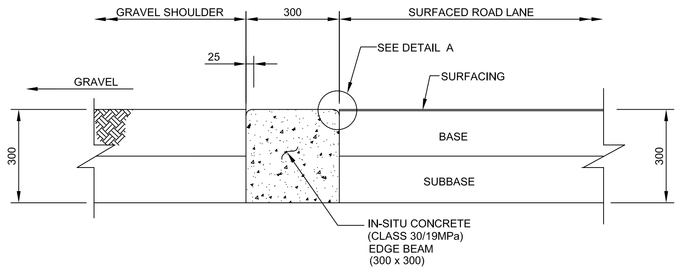

300x300 CONCRETE EDGE BEAM AT END OF SURFACING

SCALE 1 : 10

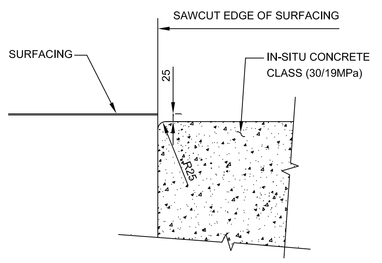

DETAIL A

SCALE 1 : 10

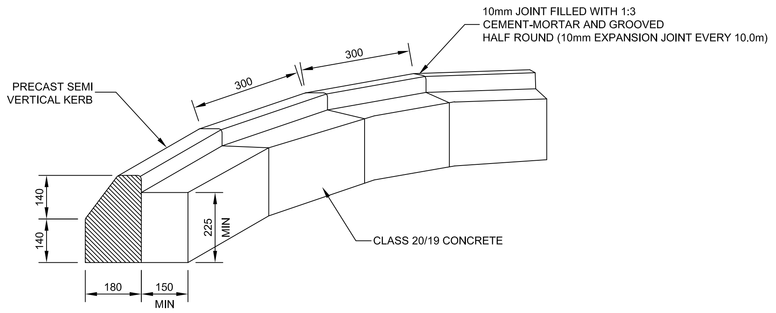

DETAIL B : KERB SUPPORT ON CURVED SECTION

NTS

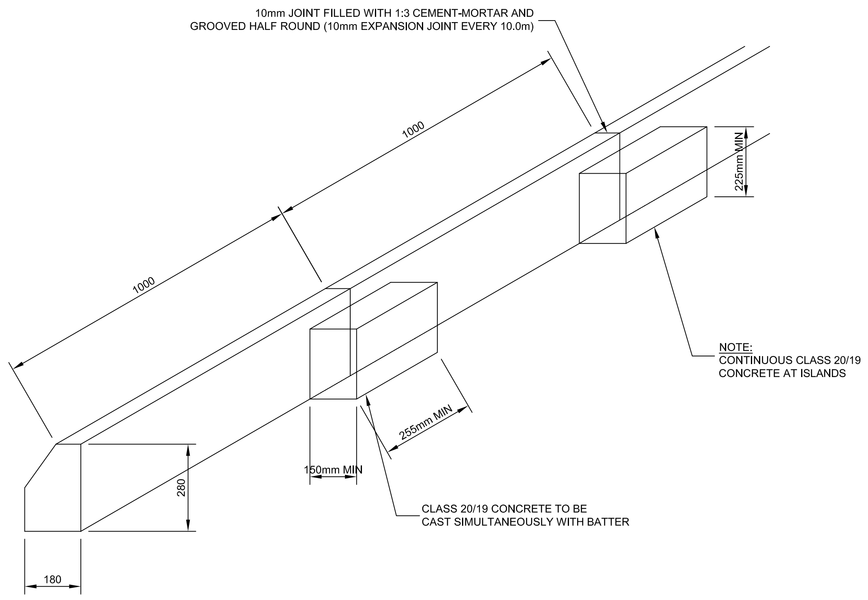

DETAIL C : SEMI VERTICAL KERB SUPPORT (STRAIGHT SECTION)

NTS

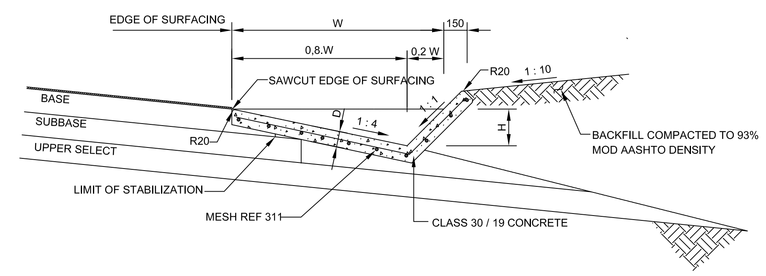

CHANNEL : TYPE 'A'

SCALE 1 : 20

CASE(n)	W	W/2	0.8W	0.2W	D	H
1	1000	500	800	200	125	200
2	1500	750	1200	300	125	425
3	2000	1000	1600	400	150	567
4	2500	1250	2000	500	150	707
5	3000	1500	2400	600	150	849

DIMENSIONS OF TYPE 'A' CONCRETE CHANNELS

NOTE :

1) CLASS 15/19 CONCRETE BEDDING BELOW PREFABRICATED KERB TO LEVEL AND BED THE KERB INTO POSITION AND SMOOTH IRREGULARITIES TO EXCAVATION: AND ONLY IF SPECIFIED BY THE ENGINEER
2) 10mm JOINT FILLED WITH 1:3 CEMENT-MORTAR AND GROOVED HALF ROUND (10mm EXPANSION JOINT EVERY 10.0m)
3) CONCRETE EDGE BEAM MUST BE PROVIDED WITH A SHRINKAGE JOINT EVERY 2m AND AN EXPANSION JOINT EVERY 10m.

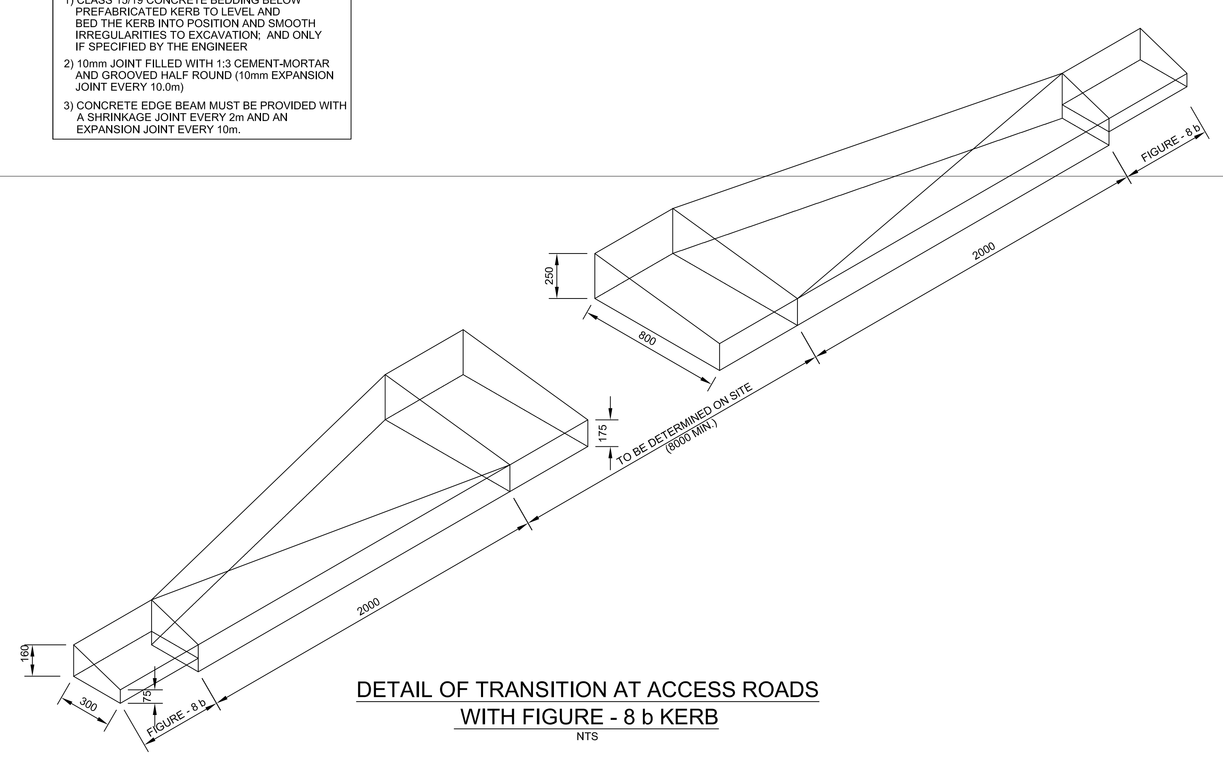

DETAIL OF TRANSITION AT ACCESS ROADS WITH FIGURE - 8 b KERB

NTS

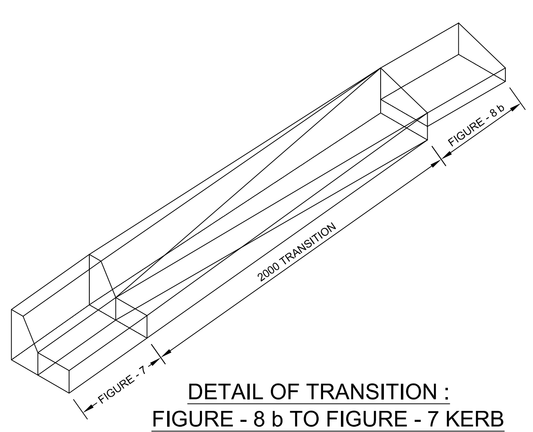

DETAIL OF TRANSITION : FIGURE - 8 b TO FIGURE - 7 KERB

NTS

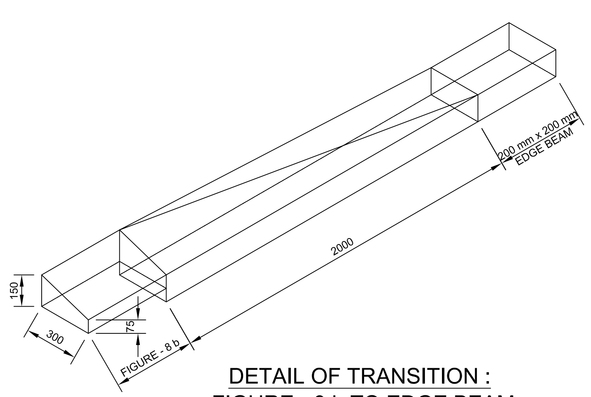

DETAIL OF TRANSITION : FIGURE - 8 b TO EDGE BEAM

NTS

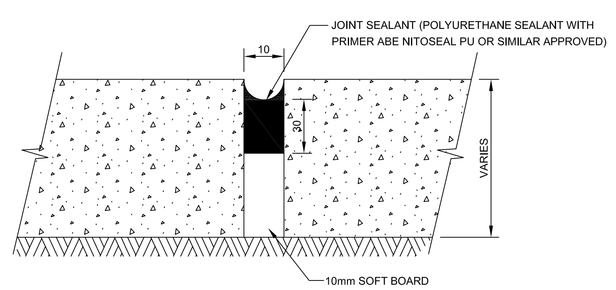

EXPANSION JOINT FOR KERBS AND EDGE BEAMS (EVERY 10m)

NTS

REV NO.	APPROVED	DATE	AMENDMENT
0	ER	07.2023	ISSUED FOR TENDER

Client: CITY OF MBOMBELA

APPROVED	
COM DRAWING NO.	
SIGNATURE	
DATE	

CITY OF MBOMBELA
Telephone : 013 759 2041
Facsimile : 013 759 2274
E-mail : N/A
Website : www.mbombela.gov.za
P. O. Box 45, Mbombela, 1200
1 Nel Street, Mbombela, 1200

Consultant: Appollo Engineering — CONSULTING ENGINEERS & PROJECT MANAGERS
APPOLLO ENGINEERING (Pty) Ltd
Telephone : 013 752 6187
Facsimile : 013 752 4199
E-mail : info@appollogroup.co.za
Website : www.appollogroup.co.za
P. O. Box 1108, Mbombela, 1240
15 Russel Street, Nelspruit, 1200

Contractor:
Telephone : XXX XXX XXXX
Facsimile : XXX XXX XXXX
E-mail : xxxxxxxx@xxxxxf.xxx
Website :
xxx xxxx xxxxxx XXXXXXXX XXXX

Drawing Title: **TYPICAL STORMATER, KERB AND CHANNEL DETAILS**

Dilsciplinc: **CIVIL ENGINEERING**

Project Name: **CONSTRUCTION OF STORMWATER CHANNEL AT RIVERSIDE, REPLACEMENT OF STORMWATER ARMCO PIPES WITH CONCRETE PIPES AT WEST ACRES AND REPLACEMENT OF BOX CULVERT AT STONEHENGE FOR THE CITY OF MBOMBELA**

ONTWERP DEUR DESIGNED BY	N. SHABANGU	SKAAL / SCALE (at A0) 1:1 000	TIPE ONTWERP / TYPE OF DESIGN: TENDER
NAGESIEN DEUR CHECKED BY	G. MARIMBITA		
GETEKEN DEUR DRAWN BY	N. SHABANGU	DATE: JULY 2023	PLAN Nr / PLAN No: APPENG100-MTCE-C-TD-05
NAGESIEN DEUR CHECKED BY	E. RAMUSHU		REV: 0

0 10 20 30 40 50 60 70 80 90 100mm NATURAL SCALE

ORIGINAL DRAWING SIZE 1189 x 841

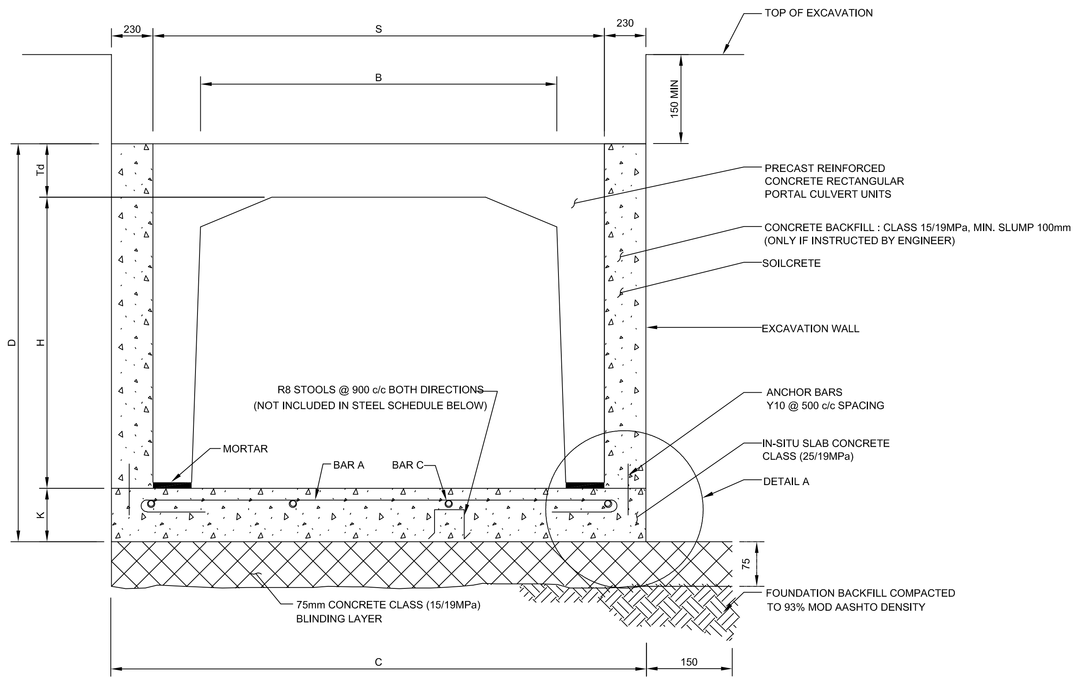

TYPICAL CROSS SECTION (SINGLE UNIT)

NTS

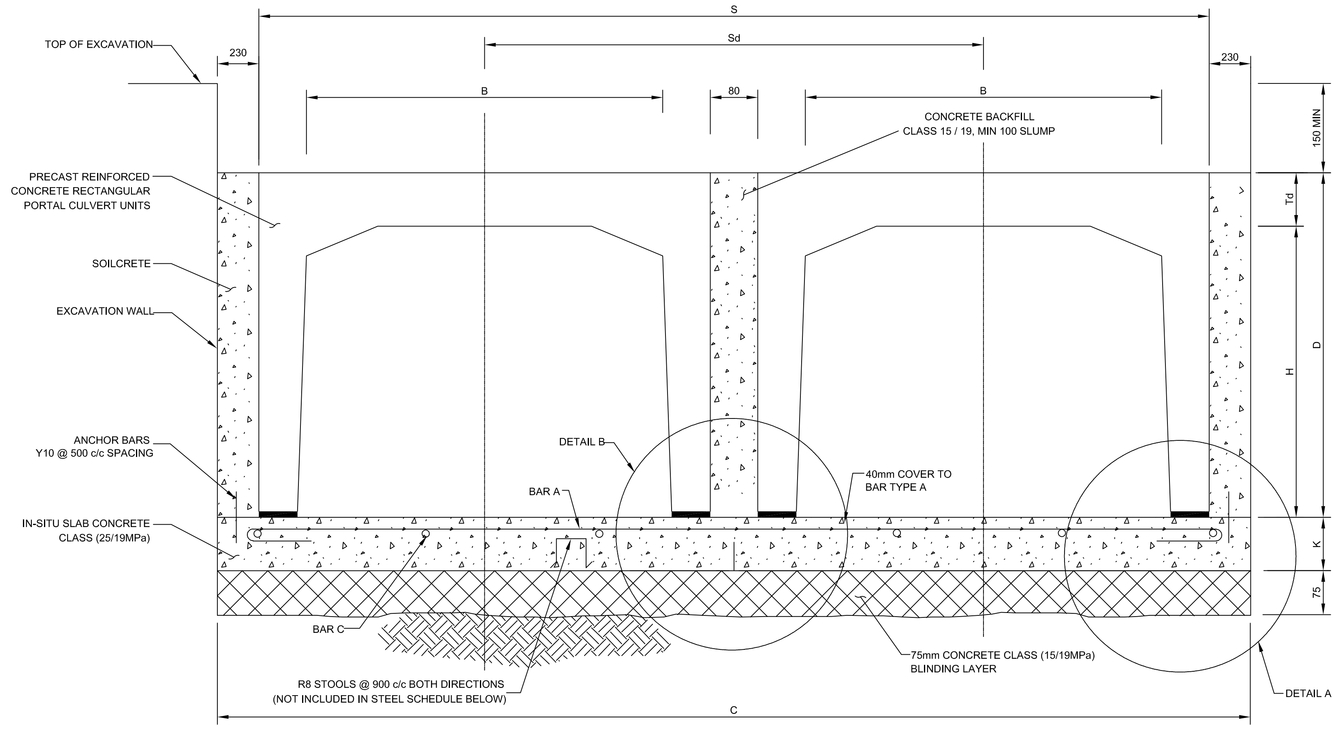

TYPICAL CROSS SECTION (MULTIPLE UNITS)

NTS

NOTES :

1. DIMENSION AND REINFORCING DETAIL FOR IN-SITU FLOOR SLABS ARE ONLY VALID :
   a) IF THE HEIGHT OF FILL ABOVE THE CULVERT IS LESS THAN THE FOLLOWING :

DIMENSIONS	HEIGHT OF FILL
600mm	6.0m
750mm	5.0m
900mm	4.0m
1200mm	3.0m
1500mm	2.5m
1800mm	2.0m
2400mm	1.5m
3000mm	0.9m

   b) WHERE THE TYPE OF MATERIAL BELOW THE FLOOR IS NOT ROCK
2. IF ACCEPTABLE TO THE ENGINEER, REPLACE THE HIGH TENSION STEEL WITH MILD STEEL REINFORCING AS FOLLOWS :
   Y10 WITH R12 - SPACING UNCHANGED
   Y12 WITH R16 - SPACING UNCHANGED
   Y16 WITH R20 - SPACING 0.93 × EXISTING
3. WHERE THREE OR MORE CULVERTS NEXT TO EACH OTHER ARE SPECIFIED, THE IN-SITU FLOOR SLABS MUST BE MADE UP OF SINGLE AND DOUBLE UNITS AS SPECIFIED IN THE TABLE
4. ALL PRECAST REINFORCED CULVERTS SHALL COMPLY WITH THE REQUIREMENTS OF SABS 986 AS WELL AS ADDITIONAL TEST LOADING AS SPECIFIED.
5. MIN. CONCRETE COVER OVER REINFORCEMENT : 40mm
6. THE CLASS OF CULVERT TO BE USED IS SPECIFIED ON THE DRAINAGE SCHEDULE
7. FLOOR SLAB TO BE ALTERNATIVE SECTIONS OF EQUAL LENGTH, MAX LENGTH = 6500m
8. SURFACE FINISH IS CLASS F1 AND U2, WHERE APPLICABLE
9. ALL JOINTS OR HOLES IN PRECAST UNITS TO BE COVERED WITH KAYMAT U24 OR SIMILAR BEFORE BACKFILL
10. PAYMENT FOR EXCAVATION AND BACKFILL WILL BE AS PER THE DIMENSIONS ON THIS DRAWING

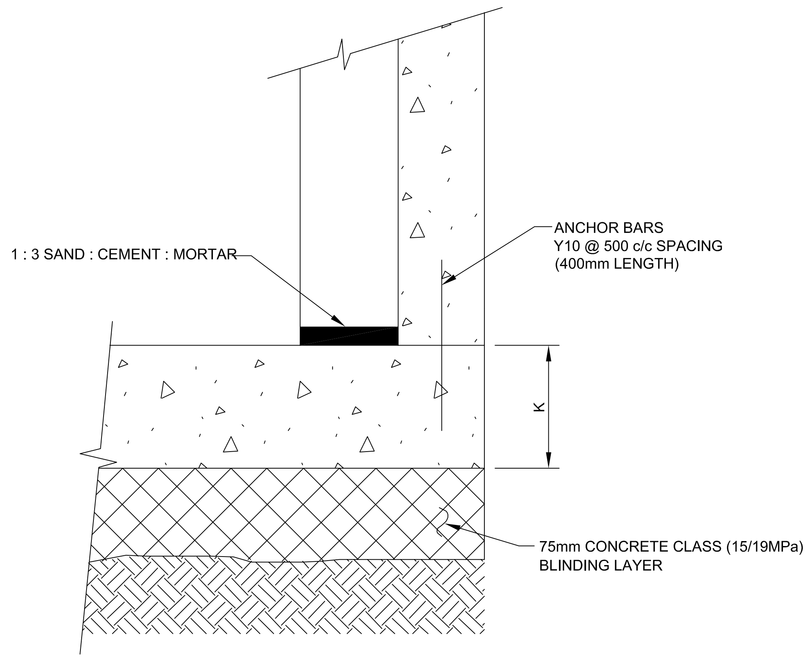

DETAIL A

NTS

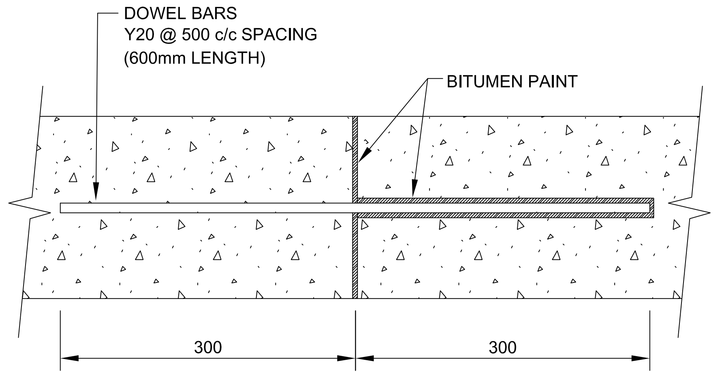

DETAIL OF TRANSVERSE JOINT IN BASE SLAB, EVENLY SPACED
MAX. SPACING = 6.5m

NTS

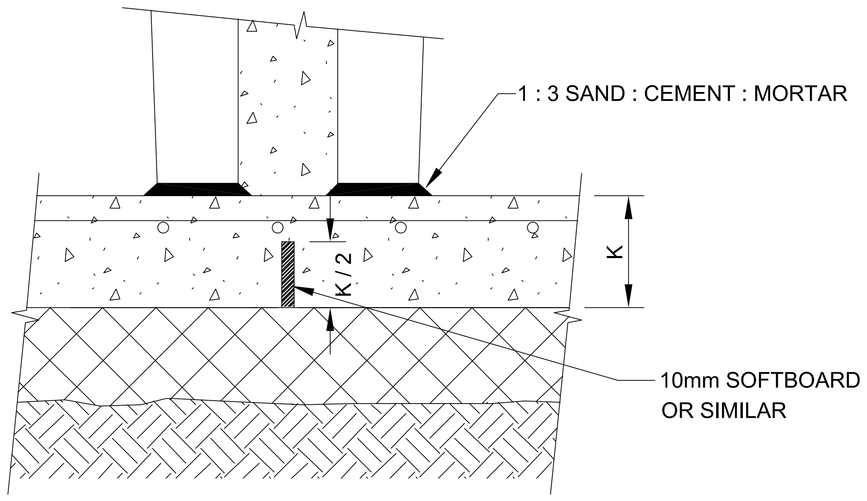

DETAIL B

NTS

DIMENSIONS										RIENFORCING FOR FLOOR SLAB					
BARREL AMOUNT	B (WIDTH)	S (CULVERT WIDTH)	C (HEADWALL WIDTH)	H (HEIGHT)	V (HEADWALL HEIGHT)	D (CONCRETE BACKFILL)	P (IN OR OUTLET FLOOR LENGTH)	R (IN OR OUTLET FLOOR WIDTH)	K (CULVERT FLOOR THICKNESS)	BAR A	SHAPE CODE	BENDING	BAR C	SHAPE CODE	BENDING
1	1200	1440	1900	600	1020	720	1545	3685	175	Y12 - 160	32	L PLACE HOOK AT ALTERNATIVE ENDS	Y10 - 200	37	90 LENGTH VARIES WITH CULVERT LENGTH
1	1200	1440	1900	900	1320	1020	2145	4378	175	Y12 - 160	32		Y10 - 200	37	
2	1200	2960	3420	900	1320	1020	2145	6357	175	Y12 - 160	32		Y10 - 200	37	
2	1200	2960	3420	1200	1620	1320	2745	6590	175	Y12 - 160	32		Y10 - 200	37	
1	1500	1750	2210	900	1325	1025	2150	4690	175	Y12 -160	32		Y10 - 200	37	
2	1500	3580	4040	1200	1625	1325	2750	7676	175	Y12 - 160	32		Y10 - 200	37	
4	1500	7240	7700	1200	1625	1325	2750	1136	175	Y12 - 130	32		Y10 - 200	37	
6	1500	10900	11360	1200	1625	1325	2750	14996	175	Y12 - 130	32		Y10 - 200	37	
7	1500	12730	13190	1200	1625	1325	2750	16830	175	Y12 - 130	32		Y10 - 200	37	

REV NO	APROVED	DATE	AMENDMENT
0	ER	07.2023	ISSUED FOR TENDER

Client: CITY OF MBOMBELA — THE SUPPLY'S SECRETARY

APPROVED
COM DRAWING NO.
SIGNATURE
DATE

CITY OF MBOMBELA
Telephone : 013 759 2041
Facsimile : 013 759 2274
E-mail : N/A
Website : www.mbombela.gov.za
P. O. Box 45, Mbombela 1200
1 Nel Street, Mbombela 1200

Consultant: Appollo Engineering — CONSULTING ENGINEERS & PROJECT MANAGERS
APPOLLO ENGINEERING (Pty) Ltd
Telephone : 013 752 6187
Facsimile : 013 752 4199
E-mail : info@appollogroup.co.za
Website : www.appollogroup.co.za
P. O. Box 1108, White River 1240
15 Russel Street, Nelspruit 1200

Contractor:
Telephone : XXX XXX XXXX
Facsimile : XXX XXX XXXX
E-mail : xxxxxxxxxx@xxxxx.xxx
Website :
xxx xxxx xxxxxx
XXXXXXXX
XXXX

Drawing Title: **TYPICAL BOX CULVERT FLOOR DETAILS**

Discipline: **CIVIL ENGINEERING**

Project Name: **CONSTRUCTION OF STORMWATER CHANNEL AT RIVERSIDE, REPLACEMENT OF STORMWATER ARMCO PIPES WITH CONCRETE PIPES AT WEST ACRES AND REPLACEMENT OF BOX CULVERT AT STONEHENGE FOR THE CITY OF MBOMBELA**

ONTWERP DEUR DESIGNED BY	N. SHABANGU	SKAAL / SCALE (at A0) 1:1 000	TIPE ONTWERP / TYPE OF DESIGN: TENDER
NAGESIEN DEUR CHECKED BY	G. MARIMBITA		
GETEKEN DEUR DRAWN BY	N. SHABANGU	DATE: JULY 2023	PLAN Nr / PLAN No: APPENG100-MTCE-C-TD-07
NAGESIEN DEUR CHECKED BY	E. RAMUSHU		REV: 0

ORIGINAL DRAWING SIZE 1189 x 841

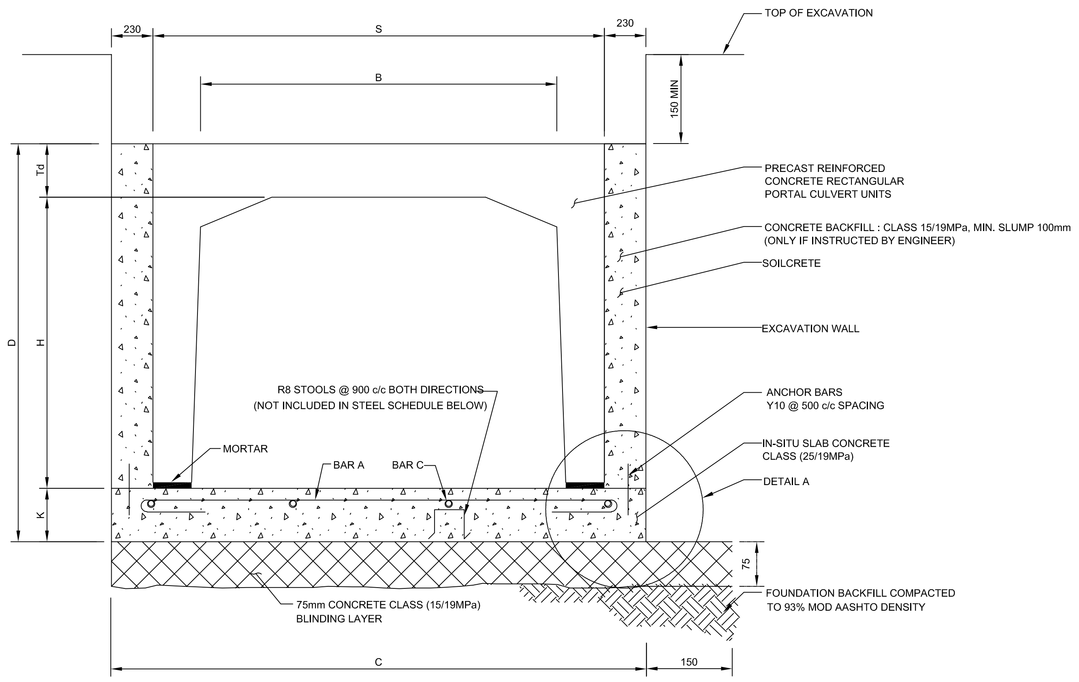

TYPICAL CROSS SECTION (SINGLE UNIT)

NTS

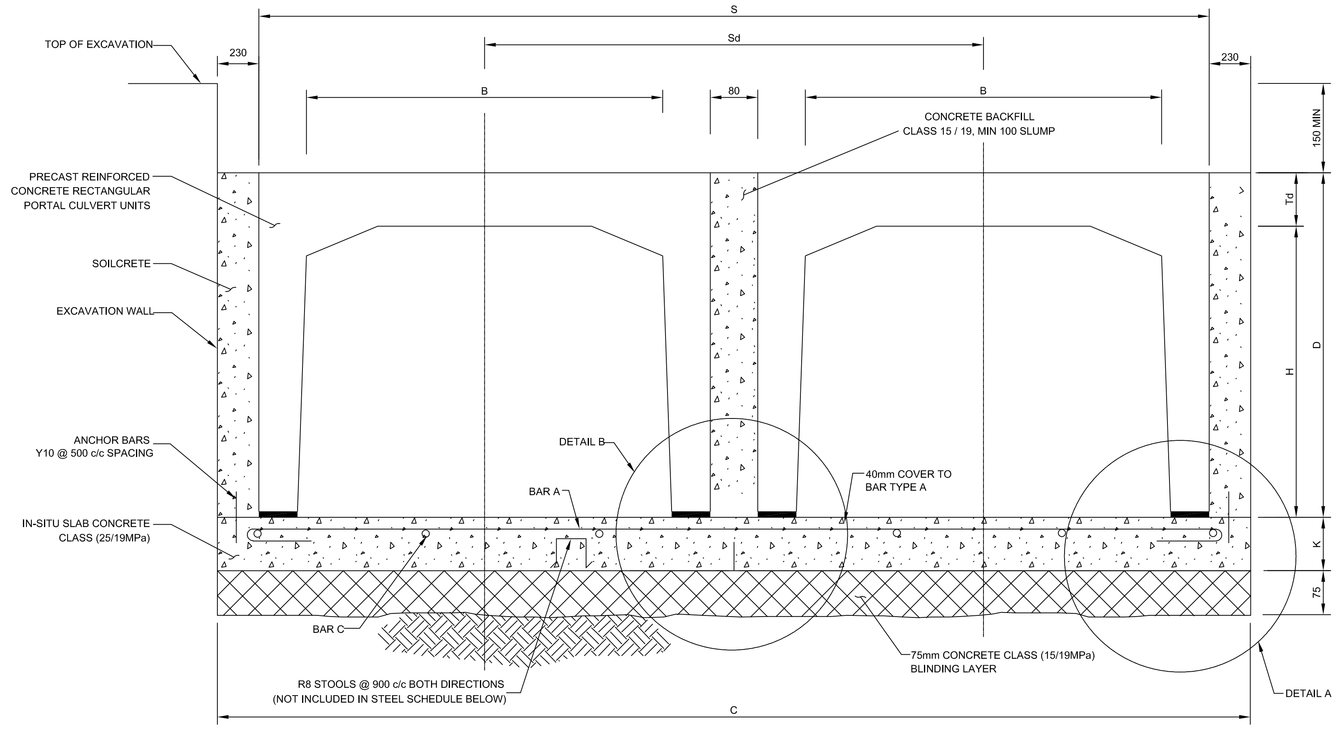

TYPICAL CROSS SECTION (MULTIPLE UNITS)

NTS

NOTES :

1. DIMENSION AND REINFORCING DETAIL FOR IN-SITU FLOOR SLABS ARE ONLY VALID :
   a) IF THE HEIGHT OF FILL ABOVE THE CULVERT IS LESS THAN THE FOLLOWING :

DIMENSIONS	HEIGHT OF FILL
600mm	6.0m
750mm	5.0m
900mm	4.0m
1200mm	3.0m
1500mm	2.5m
1800mm	2.0m
2400mm	1.5m
3000mm	0.9m

   b) WHERE THE TYPE OF MATERIAL BELOW THE FLOOR IS NOT ROCK
2. IF ACCEPTABLE TO THE ENGINEER, REPLACE THE HIGH TENSION STEEL WITH MILD STEEL REINFORCING AS FOLLOWS :
   Y10 WITH R12 - SPACING UNCHANGED
   Y12 WITH R16 - SPACING UNCHANGED
   Y16 WITH R20 - SPACING 0.93 × EXISTING
3. WHERE THREE OR MORE CULVERTS NEXT TO EACH OTHER ARE SPECIFIED, THE IN-SITU FLOOR SLABS MUST BE MADE UP OF SINGLE AND DOUBLE UNITS AS SPECIFIED IN THE TABLE
4. ALL PRECAST REINFORCED CULVERTS SHALL COMPLY WITH THE REQUIREMENTS OF SABS 986 AS WELL AS ADDITIONAL TEST LOADING AS SPECIFIED.
5. MIN. CONCRETE COVER OVER REINFORCEMENT : 40mm
6. THE CLASS OF CULVERT TO BE USED IS SPECIFIED ON THE DRAINAGE SCHEDULE
7. FLOOR SLAB TO BE ALTERNATIVE SECTIONS OF EQUAL LENGTH, MAX LENGTH = 6500m
8. SURFACE FINISH IS CLASS F1 AND U2, WHERE APPLICABLE
9. ALL JOINTS OR HOLES IN PRECAST UNITS TO BE COVERED WITH KAYMAT U24 OR SIMILAR BEFORE BACKFILL
10. PAYMENT FOR EXCAVATION AND BACKFILL WILL BE AS PER THE DIMENSIONS ON THIS DRAWING

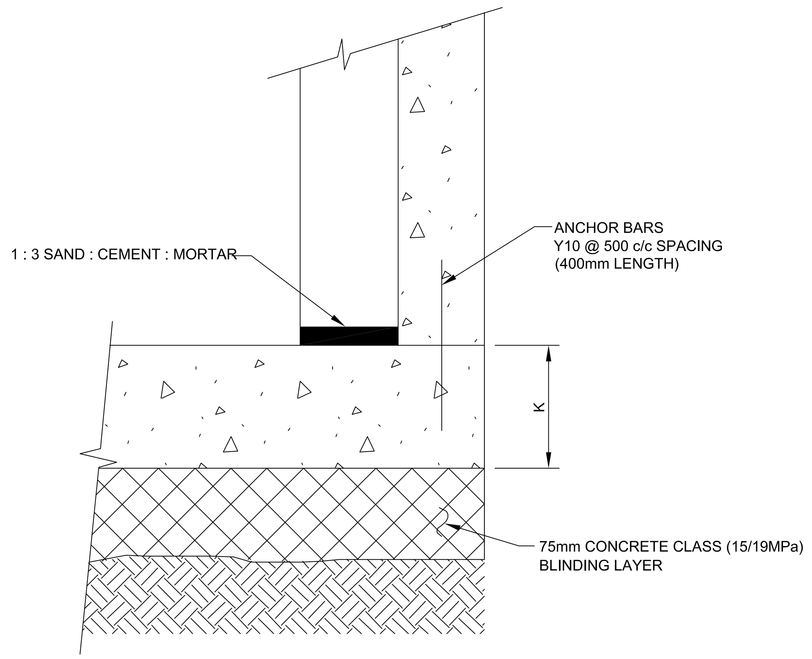

DETAIL A

NTS

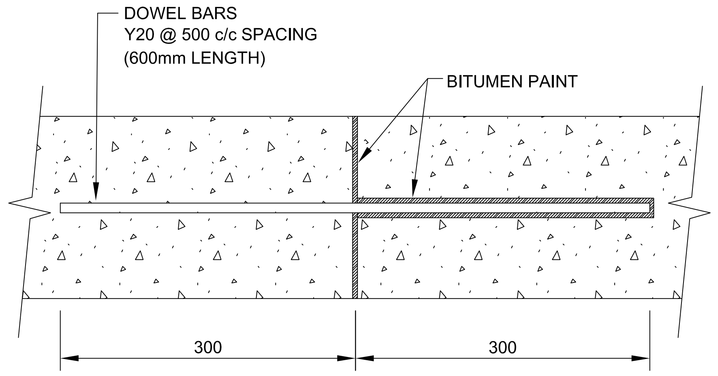

DETAIL OF TRANSVERSE JOINT IN BASE SLAB, EVENLY SPACED
MAX. SPACING = 6.5m

NTS

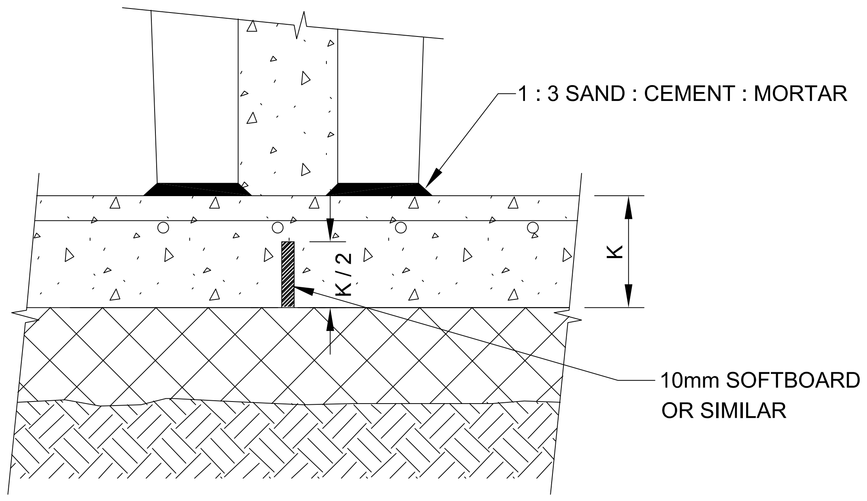

DETAIL B

NTS

DIMENSIONS										RIENFORCING FOR FLOOR SLAB					
BARREL AMOUNT	B (WIDTH)	S (CULVERT WIDTH)	C (HEADWALL WIDTH)	H (HEIGHT)	V (HEADWALL HEIGHT)	D (CONCRETE BACKFILL)	P (IN OR OUTLET FLOOR LENGTH)	R (IN OR OUTLET FLOOR WIDTH)	K (CULVERT FLOOR THICKNESS)	BAR A	SHAPE CODE	BENDING	BAR C	SHAPE CODE	BENDING
1	1200	1440	1900	600	1020	720	1545	3685	175	Y12 - 160	32	L PLACE HOOK AT ALTERNATIVE ENDS	Y10 - 200	37	90 LENGTH VARIES WITH CULVERT LENGTH
1	1200	1440	1900	900	1320	1020	2145	4378	175	Y12 - 160	32		Y10 - 200	37	
2	1200	2960	3420	900	1320	1020	2145	6357	175	Y12 - 160	32		Y10 - 200	37	
2	1200	2960	3420	1200	1620	1320	2745	6590	175	Y12 - 160	32		Y10 - 200	37	
1	1500	1750	2210	900	1325	1025	2150	4690	175	Y12 -160	32		Y10 - 200	37	
2	1500	3580	4040	1200	1625	1325	2750	7676	175	Y12 - 160	32		Y10 - 200	37	
4	1500	7240	7700	1200	1625	1325	2750	1136	175	Y12 - 130	32		Y10 - 200	37	
6	1500	10900	11360	1200	1625	1325	2750	14996	175	Y12 - 130	32		Y10 - 200	37	
7	1500	12730	13190	1200	1625	1325	2750	16830	175	Y12 - 130	32		Y10 - 200	37	

REV NO	APROVED	DATE	AMENDMENT
0	ER	07.2023	ISSUED FOR TENDER

Client: CITY OF MBOMBELA — THE SUPPLY'S SECRETARY

APPROVED
COM DRAWING NO.
SIGNATURE
DATE

CITY OF MBOMBELA
Telephone : 013 759 2041
Facsimile : 013 759 2274
E-mail : N/A
Website : www.mbombela.gov.za
P. O. Box 45, Mbombela 1200
1 Nel Street, Mbombela 1200

Consultant: Appollo Engineering — CONSULTING ENGINEERS & PROJECT MANAGERS
APPOLLO ENGINEERING (Pty) Ltd
Telephone : 013 752 6187
Facsimile : 013 752 4199
E-mail : info@appollogroup.co.za
Website : www.appollogroup.co.za
P. O. Box 1108, White River 1240
15 Russel Street, Nelspruit 1200

Contractor:
Telephone : XXX XXX XXXX
Facsimile : XXX XXX XXXX
E-mail : xxxxxxxxxx@xxxxx.xxx
Website :
xxx xxxx xxxxxx
XXXXXXXX
XXXX

Drawing Title: **TYPICAL BOX CULVERT FLOOR DETAILS**

Discipline: **CIVIL ENGINEERING**

Project Name: **CONSTRUCTION OF STORMWATER CHANNEL AT RIVERSIDE, REPLACEMENT OF STORMWATER ARMCO PIPES WITH CONCRETE PIPES AT WEST ACRES AND REPLACEMENT OF BOX CULVERT AT STONEHENGE FOR THE CITY OF MBOMBELA**

ONTWERP DEUR DESIGNED BY	N. SHABANGU	SKAAL / SCALE (at A0) 1:1 000	TIPE ONTWERP / TYPE OF DESIGN: TENDER
NAGESIEN DEUR CHECKED BY	G. MARIMBITA		
GETEKEN DEUR DRAWN BY	N. SHABANGU	DATE: JULY 2023	PLAN Nr / PLAN No: APPENG100-MTCE-C-TD-07
NAGESIEN DEUR CHECKED BY	E. RAMUSHU		REV: 0

ORIGINAL DRAWING SIZE 1189 x 841

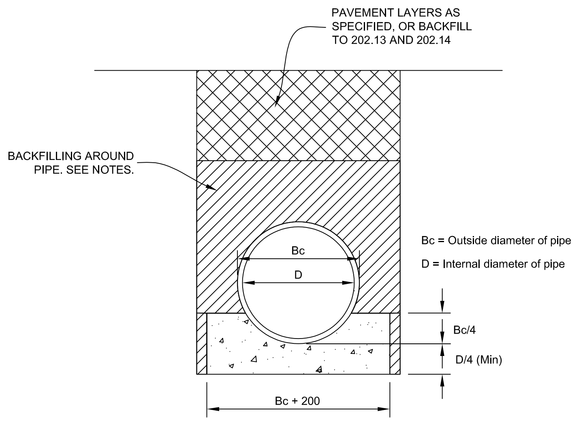

CLASS A BEDDING

SCALE 1:20

NOTE:

1. THE CLASS A IN SITU CONCRETE BEDDING SHALL BE IN ACCORDANCE WITH SABS 0102.

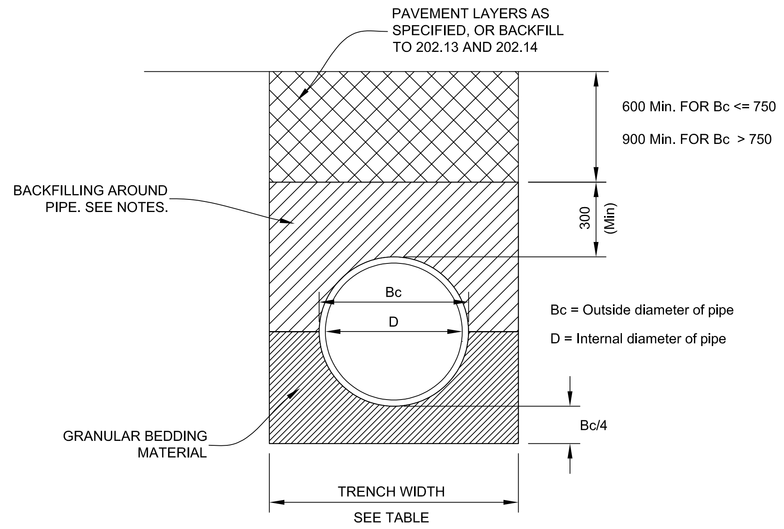

CLASS B BEDDING

SCALE 1:20

NOTE:

1. BEDDING SHALL BE OF AN APPROVED SELECTED GRAVEL MATERIAL WITH A PI NOT EXCEEDING 6.
2. BEDDING MATERIAL SHALL BE COMPACTED TO 90% OF MOD. AASHTO DENSITY.

Pipe Dia	Trench width
	mm
450	850
525	925
600	1000
675	1575
750	1650
825	1725
900	1800
1050	1950
1200	2100
1350	2250
1500	2400
1650	2550
1800	2700

NOTES:

1. GENERAL
1.1 THE DESIGN CHARTS ARE BASED ON THE REQUIREMENTS OF SABS 0102-1987: PART I AND PART II.
1.2 A UNIT WEIGHT OF FILL MATERIAL OF 20 kN/mó WAS USED.
1.3 THE SOIL TYPE AND PROPERTIES REFER TO TABLE 2 IN SABS 0102:PART I-1987.
1.4 THE TRENCH WIDTHS USED ARE IN ACCORDANCE WITH THE REQUIREMENTS IN PARAGRAPH 04.01 OF SECTION 201:GENERAL OF THE 'STANDARD SPECIFICATIONS FOR MUNICIPAL CIVIL ENGINEERING WORKS.

TABLE 1: AUTHORISED TRENCH WIDTHS IN ACCORDANCE WITH SABS 1200LB

TABLE 2: CONCRETE INTERLOCKING JOINT PIPE DATA

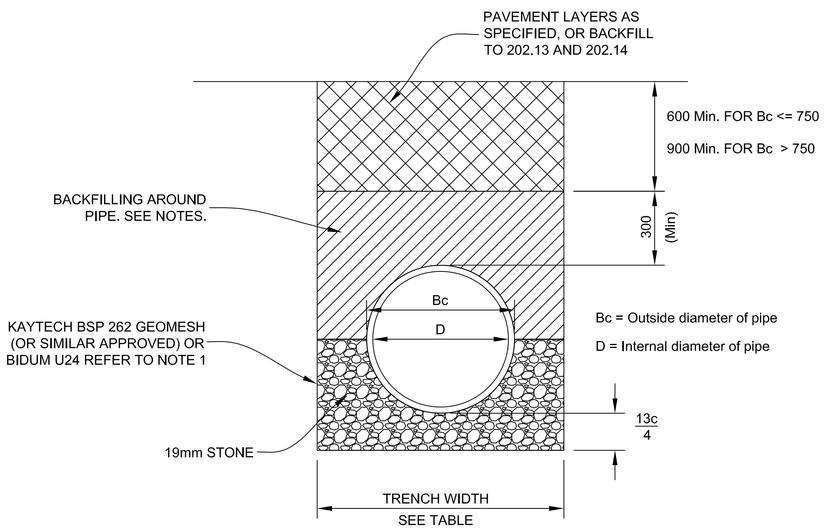

CLASS B BEDDING: 19mm STONE USED AS BEDDING

SCALE 1:20

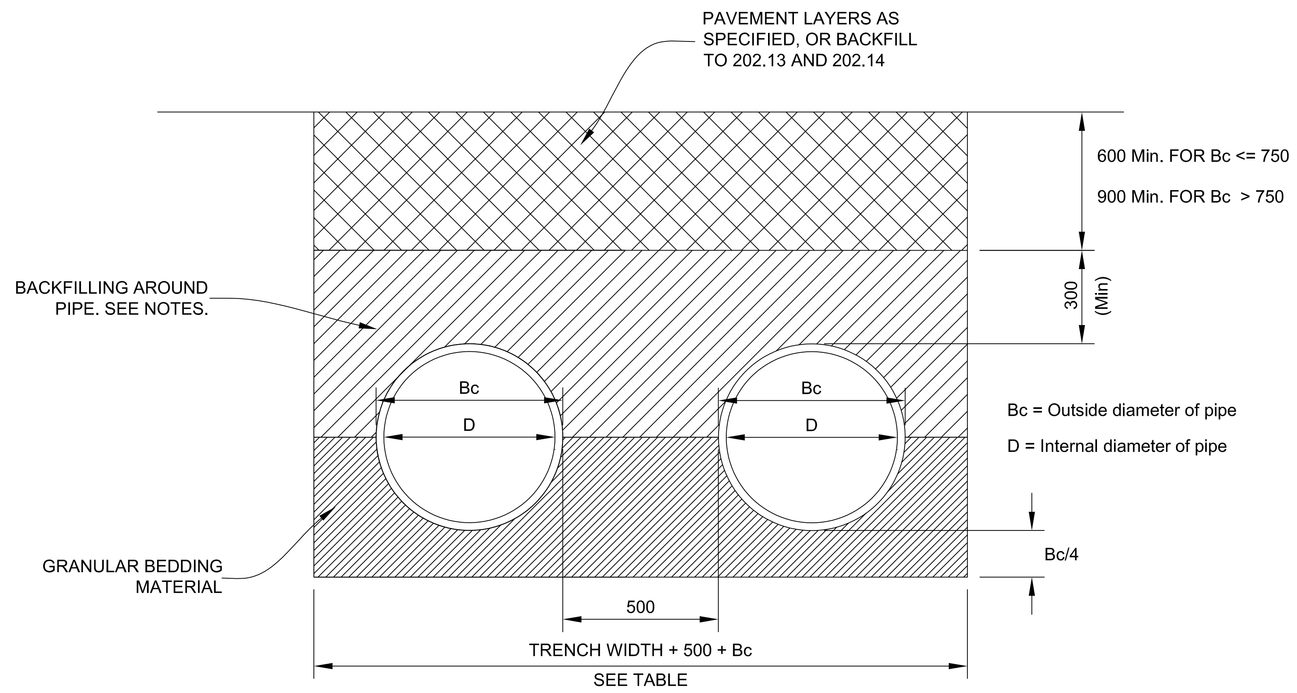

CLASS B BEDDING (DOUBLE PIPE)

SCALE 1:20

NOTE:

1. BEDDING SHALL BE OF AN APPROVED SELECTED GRAVEL MATERIAL WITH A PI NOT EXCEEDING 6.
2. BEDDING MATERIAL SHALL BE COMPACTED TO 90% OF MOD. AASHTO DENSITY.

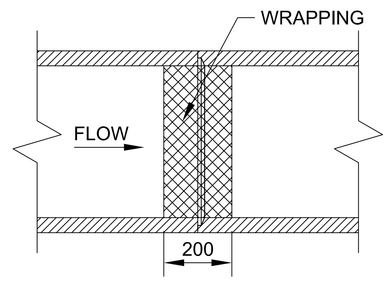

WRAPPING:
1. 2 LAYERS OF 0.4mm THICK DAMP COURSE
2. 2 LAERS OF HESSIAN SOAKED IN A BITUMINOUS
3. 1 LAYER OF GEOFABRIC BLANKET OF THICKNESS 16mm IF THE FLOW OF WATER THROUGH JOINTS IN BOTH DIRECTIONS IS TO BE ALLOWED

INTERLOCKING PIPE JOINTING

SCALE 1:20

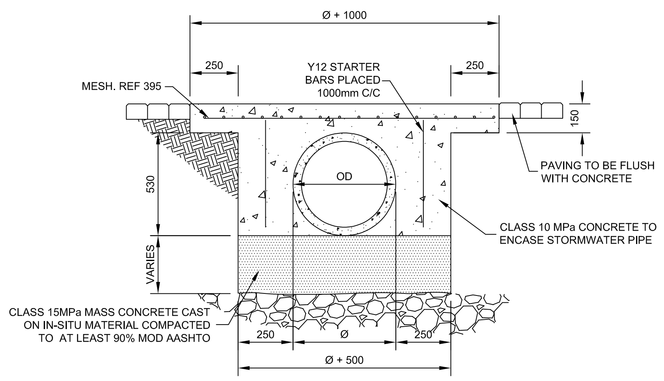

TYPICAL SECTION THROUGH STORMWATER PIPE ENCASEMENT

SCALE 1:20

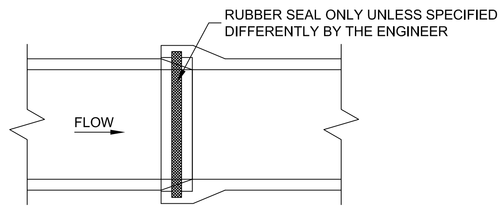

SPIGOT AND SOCKET PIPE JOINTING

SCALE 1:20

REV NO	APPROVED	DATE	AMENDMENT
0	ER	07.2023	ISSUED FOR TENDER

Client: CITY OF MBOMBELA — THE ULTIMATE DESTINATION

APPROVED	
COM. DRAWING NO.	
SIGNATURE	
DATE	

CITY OF MBOMBELA
Telephone : 013 759 2041
Facsimile : 013 759 2274
E-mail : N/A
Website : www.mbombela.gov.za
P. O. Box 45, Mbombela, 1200
1 Nel Street, Mbombela, 1200

Consultant: Appollo Engineering — CONSULTING ENGINEERS & PROJECT MANAGERS

APPOLLO ENGINEERING (Pty) Ltd
Telephone : 013 752 6187
Facsimile : 013 752 4199
E-mail : info@appollogroup.co.za
Website : www.appollogroup.co.za
P. O. Box 1108, White River, 1240
15 Russel Street, Nelspruit, 1200

Contractor:
Telephone : XXX XXX XXXX
Facsimile : XXX XXX XXXX
E-mail : xxxxxxxxx@xxxxx.xxx
Website :
xxx xxxx xxxxxx
XXXXXXXX
XXXX

Drawing Title: **PIPE BEDDING DETAILS**

Discipline: **CIVIL ENGINEERING**

Project Name: **CONSTRUCTION OF STORMWATER CHANNEL AT RIVERSIDE, REPLACEMENT OF STORMWATER ARMCO PIPES WITH CONCRETE PIPES AT WEST ACRES AND REPLACEMENT OF BOX CULVERT AT STONEHENGE FOR THE CITY OF MBOMBELA**

ONTWERP DEUR DESIGNED BY	N. SHABANGU	SKAAL / SCALE (at A0) 1:1 000	TIPE ONTWERP / TYPE OF DESIGN: TENDER
NAGESIEN DEUR CHECKED BY	G. MARIMBITA		
GETEKEN DEUR DRAWN BY	N. SHABANGU	DATE: JULY 2023	PLAN Nr / PLAN No: **APPENG100-MTCE-C-TD-09**
NAGESIEN DEUR CHECKED BY	E. RAMUSHU		REV: 0

0 10 20 30 40 50 60 70 80 90 100mm NATURAL SCALE

ORIGINAL DRAWING SIZE 1189 x 841

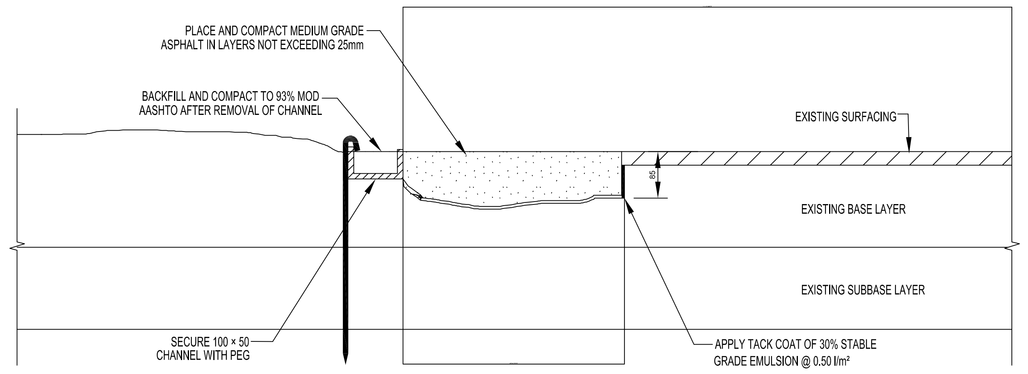

TREATING OF EDGE BREAK :
CONSTRUCTION AND FINISHING PHASE
SCALE 1:5

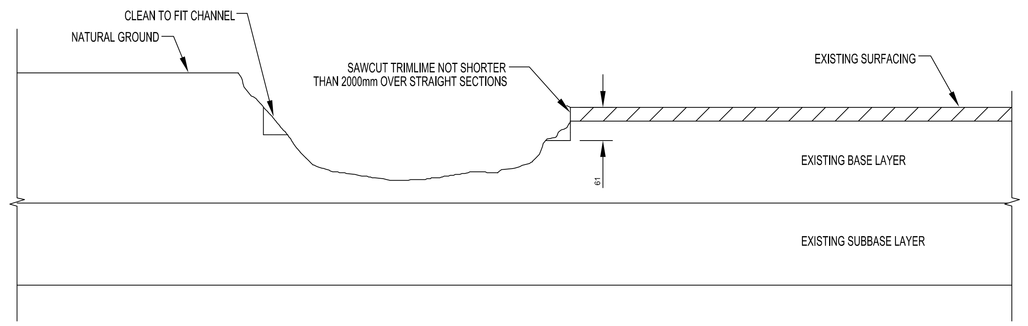

TREATING OF EDGE BREAK :
EXCAVATION AND PREPARATION PHASE
SCALE 1:5

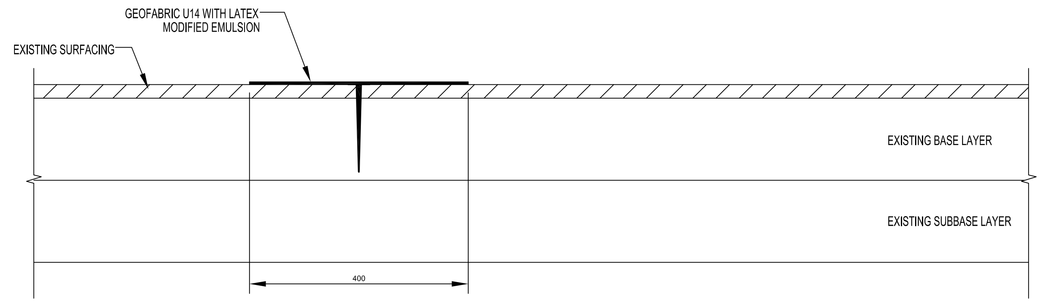

SEALING OF CRACKS WITH GEOTEXTILE
AND LATEX MODIFIED EMULSION
SCALE 1:5

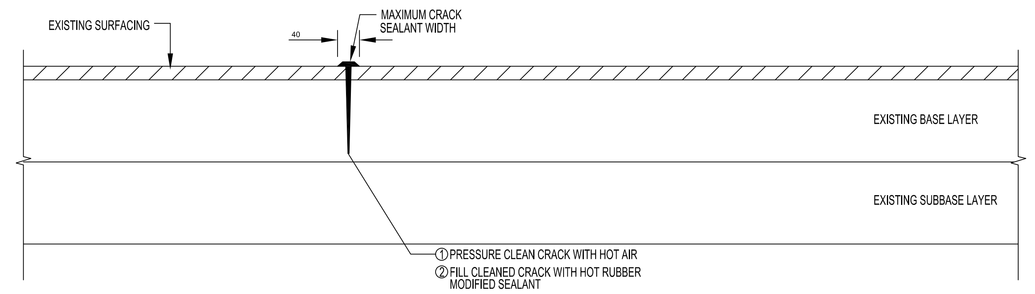

SEALING OF CRACKS WITH
RUBBER MODIFIED SEALANT
SCALE 1:5

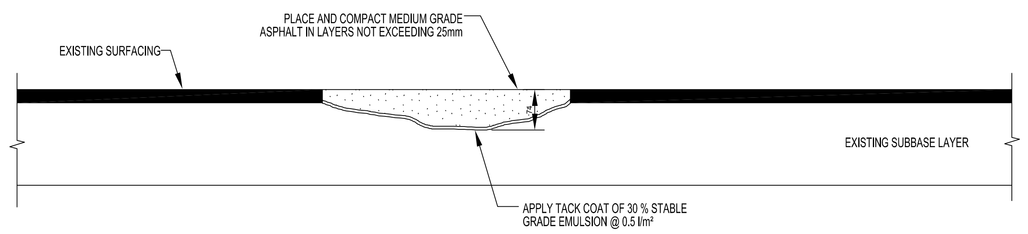

TYPICAL POTHOLE PATCH
SCALE 1:5

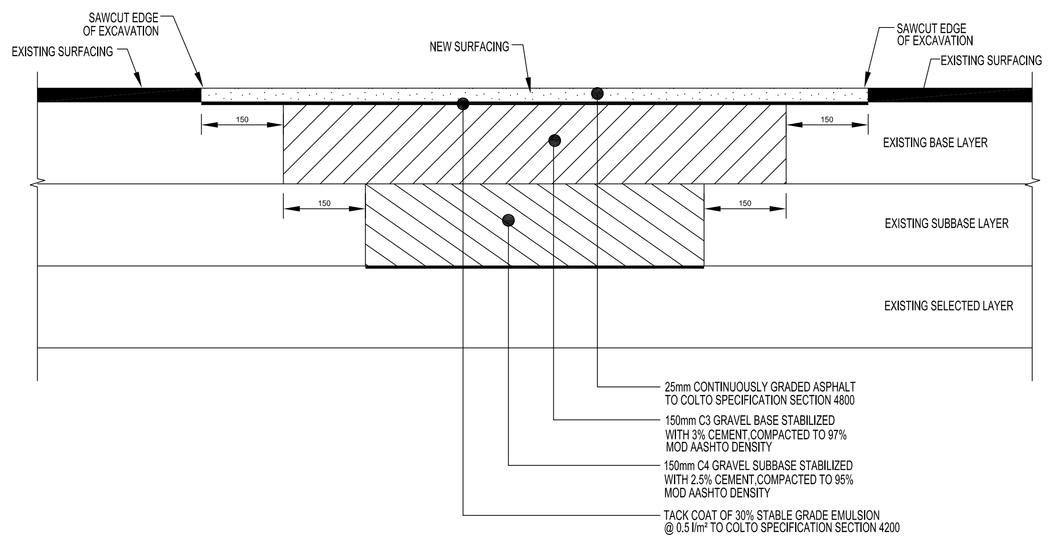

TYPICAL SUBBASE AND BASE PATCH
SCALE 1:5

REV NO	APPROVED	DATE	AMENDMENT
0	ER	07.2023	ISSUED FOR TENDER

0 10 20 30 40 50 60 70 80 90 100mm NATURAL SCALE

Client:
CITY OF MBOMBELA
THE ULTIMATE DESTINATION
CITY OF MBOMBELA
Telephone : 013 759 2041
Facsimile : 013 759 2274
E-mail : N/A
Website : www.mbombela.gov.za
P. O. Box 45, Mbombela, 1200
1 Nel Street, Mbombela, 1200

APPROVED	
COM DRAWING NO.	
SIGNATURE	
DATE	

Consultant:
Appollo Engineering
CONSULTING ENGINEERS & PROJECT MANAGERS
APPOLLO ENGINEERING (Pty) Ltd
Telephone : 013 752 6187
Facsimile : 013 752 4199
E-mail : info@appollogroup.co.za
Website : www.appollogroup.co.za
P. O. Box 1108, White River, 1240
15 Russel Street, Nelspruit, 1200

Contractor:
Telephone : XXX XXX XXXX
Facsimile : XXX XXX XXXX
E-mail : xxxxxxxxx@xxxxx.xxx
Website :
xxx xxxx xxxxxx
XXXXXXXX
XXXX

Drawing Title:
REHABILITATION OF EXISTING ROADS

Discipline:
CIVIL ENGINEERING

Project Name:
CONSTRUCTION OF STORMWATER CHANNEL AT RIVERSIDE, REPLACEMENT OF STORMWATER ARMCO PIPES WITH CONCRETE PIPES AT WEST ACRES AND REPLACEMENT OF BOX CULVERT AT STONEHENGE FOR THE CITY OF MBOMBELA

ONTWERP DEUR DESIGNED BY	N. SHABANGU	SKAAL / SCALE (at A0)	TIPE ONTWERP / TYPE OF DESIGN
NAGESIEN DEUR CHECKED BY	G. MARIMBITA	1:1 000	TENDER
GETEKEN DEUR DRAWN BY	N. SHABANGU	DATE:	PLAN Nr / PLAN No / REV
NAGESIEN DEUR CHECKED BY	E. RAMUSHU	JULY 2023	APPENG100-MTCE-C-SD-01 / 0

ORIGINAL DRAWING SIZE 1189 x 841

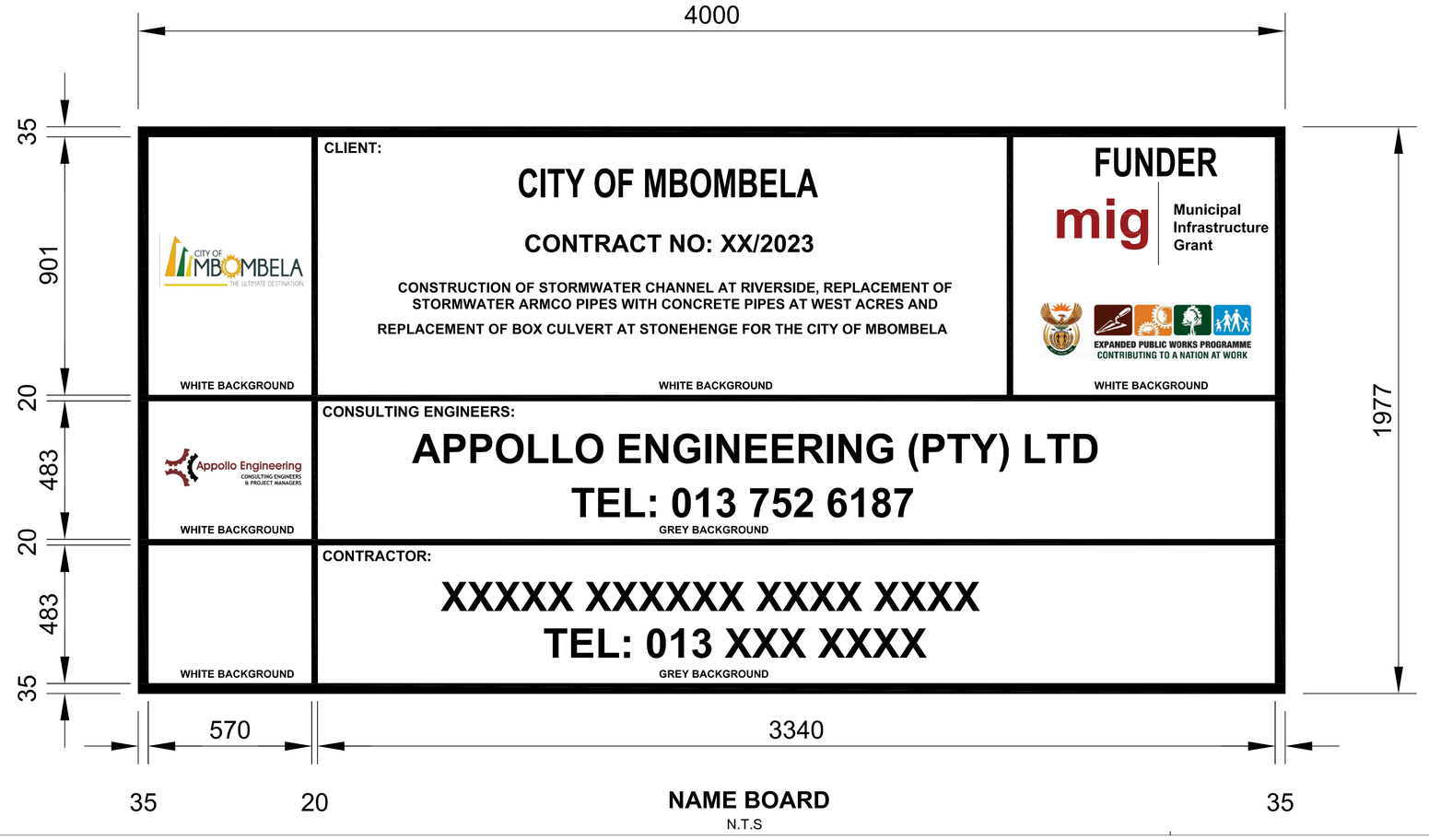

NAME BOARD
N.T.S

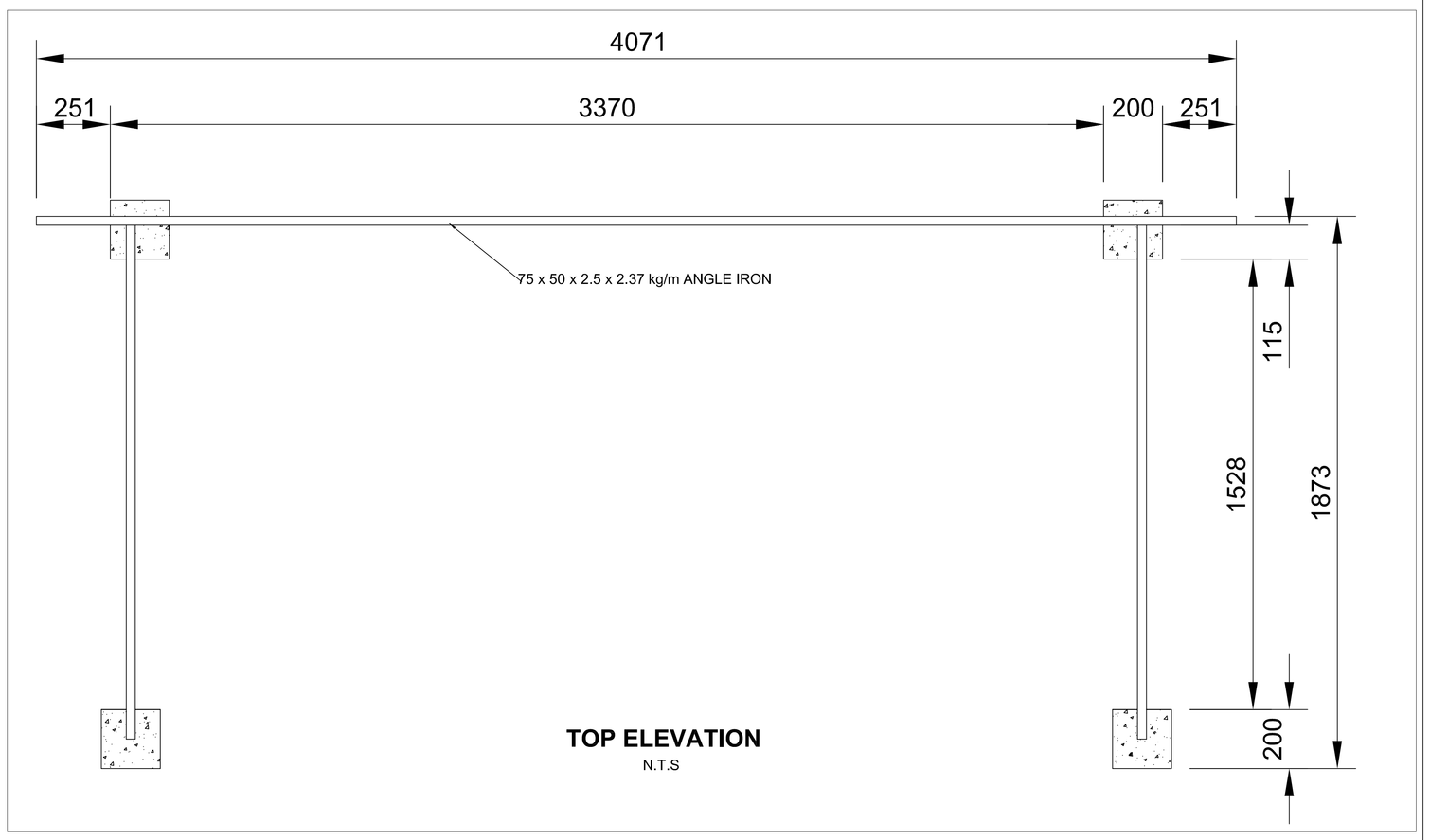

TOP ELEVATION
N.T.S

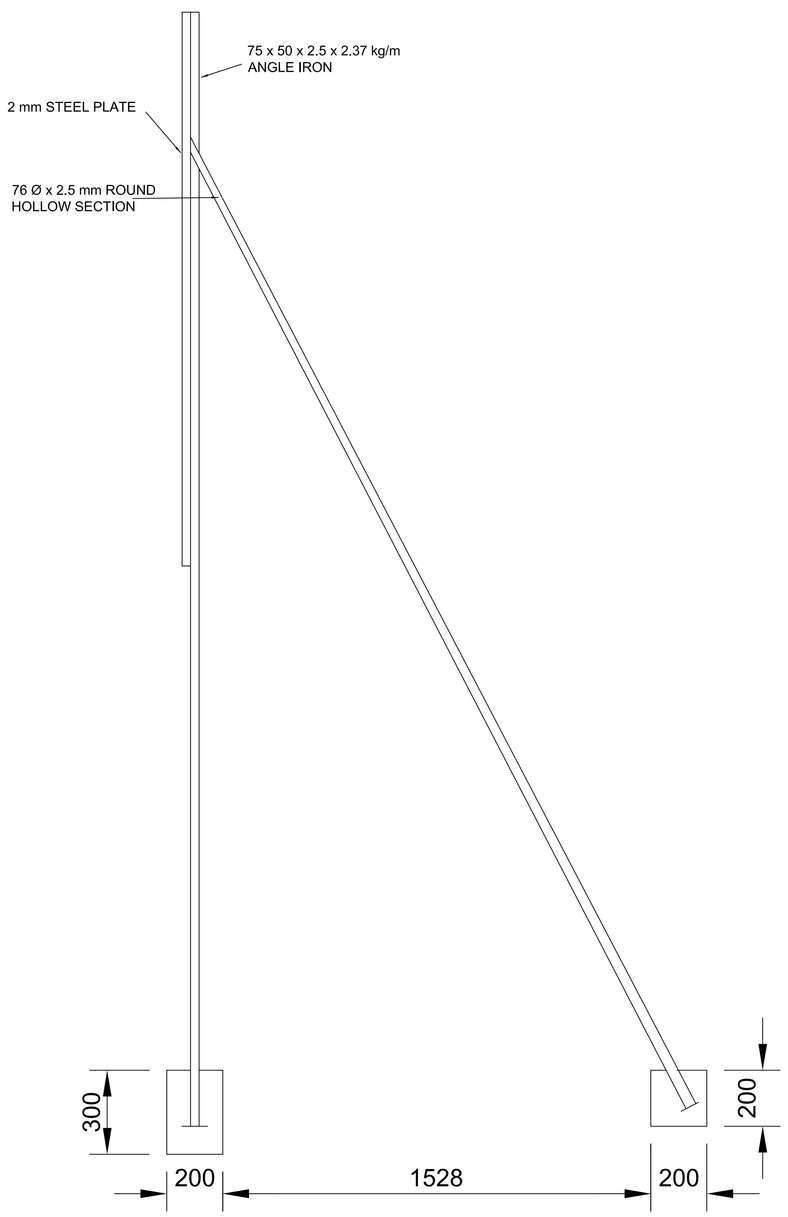

SIDE ELEVATION
N.T.S

RULES

1. Typeface to be used shall be helvetica medium.
2. Size of lettering and dimensions are indicated on the diagram and shall be strictly adhered to.

NOTA: Paint colours are based on plascon-evans. White vlo 1 : Tequilla vlo 10 ("Velvaglo" polyrethane velvet enamel) black ref. 266, middle blue ref. 290 (acrylic road sign paints)

PROJECT AND OWNERS NAME. HELVETICA MEDIUM 100mm WHITE CAPITAL

CONSULTANTS AND FIRM NAMES. HELVETICA MEDIUM 75mm BLACK CAPITAL

FOR PROFESSIONAL TITLE. HELETICA MEDIUM 50mm BLACK CAPITAL LETTERS ONLY MUST BE USED

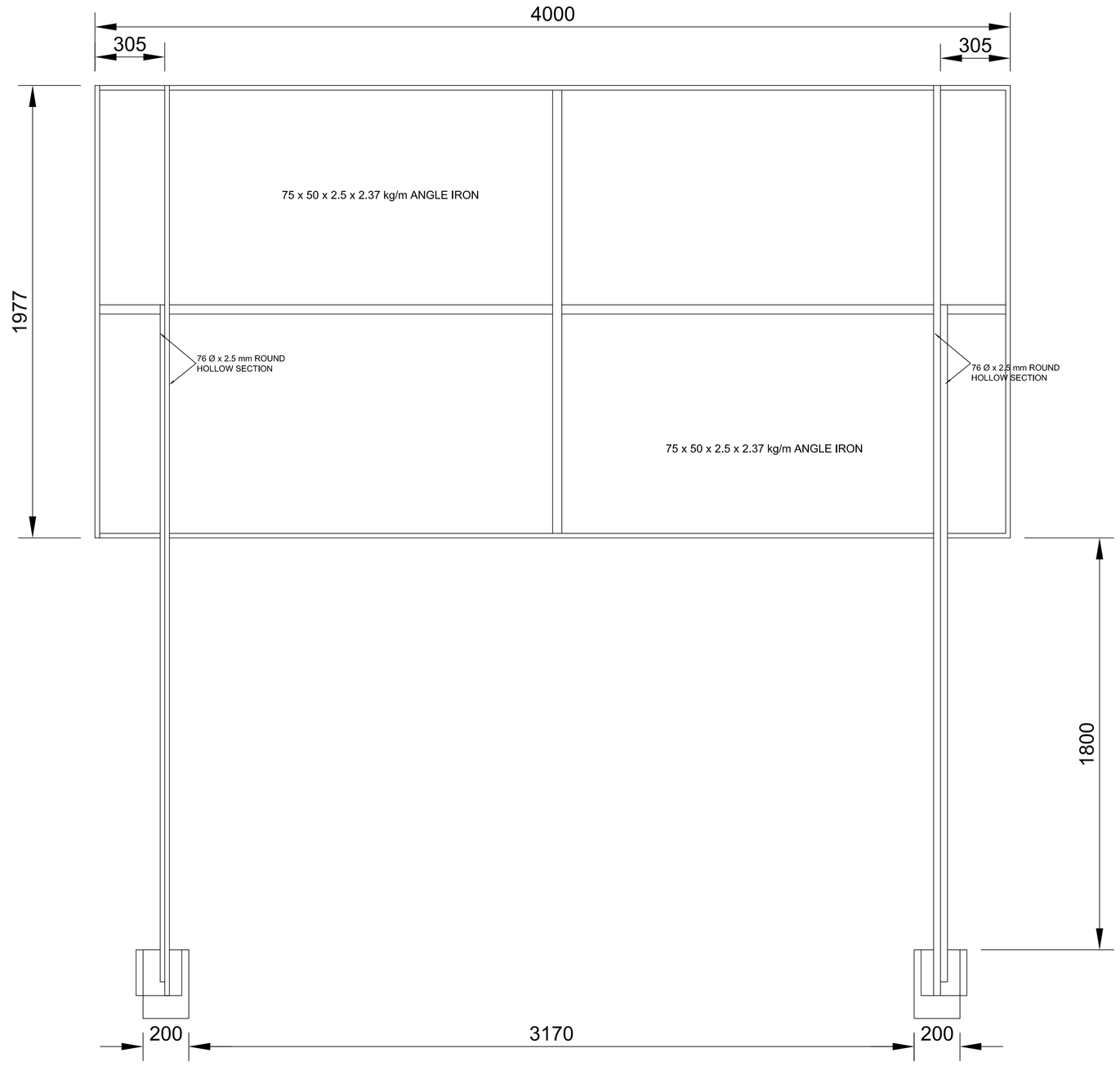

BACK ELEVATION
N.T.S

REV NO	APPROVED	DATE	AMENDMENT
0	ER	07.2023	ISSUED FOR TENDER

Client: CITY OF MBOMBELA
Telephone : 013 759 2041
Facsimile : 013 759 2274
E-mail : N/A
Website : www.mbombela.gov.za
P. O. Box 45 Mbombela 1200
1 Nel Street Mbombela 1200

APPROVED
COM DRAWING NO.
SIGNATURE
DATE

Consultant: Appollo Engineering
APPOLLO ENGINEERING (Pty) Ltd
Telephone : 013 752 6187
Facsimile : 013 752 4199
E-mail : info@appologroup.co.za
Website : www.appologroup.co.za
P. O. Box 1108 White River 1240
15 Russel Street Nelspruit 1200

Contractor:
Telephone : XXX XXX XXXX
Facsimile : XXX XXX XXXX
E-mail : xxxxxxxxx@xxxxx.xxx
Website :
xxx xxxx xxxxxx XXXXXXXX XXXX

Drawing Title: **PROJECT NAME BOARD**

Dilsipline: **CIVIL ENGINEERING**

Project Name: **CONSTRUCTION OF STORMWATER CHANNEL AT RIVERSIDE, REPLACEMENT OF STORMWATER ARMCO PIPES WITH CONCRETE PIPES AT WEST ACRES AND REPLACEMENT OF BOX CULVERT AT STONEHENGE FOR THE CITY OF MBOMBELA**

ONTWERP DEUR DESIGNED BY	N. SHABANGU	SKAAL / SCALE (at A0) 1:1 000	TIPE ONTWERP / TYPE OF DESIGN: TENDER
NAGESIEN DEUR CHECKED BY	N. MADONSELA		
GETEKEN DEUR DRAWN BY	N. SHABANGU	DATE: JULY 2023	PLAN Nr / PLAN No: APPENG100-MTCE-C-SD-01
NAGESIEN DEUR CHECKED BY	K. KETA		REV: 0

0 10 20 30 40 50 60 70 80 90 100mm NATURAL SCALE

ORIGINAL DRAWING SIZE 1189 x 841