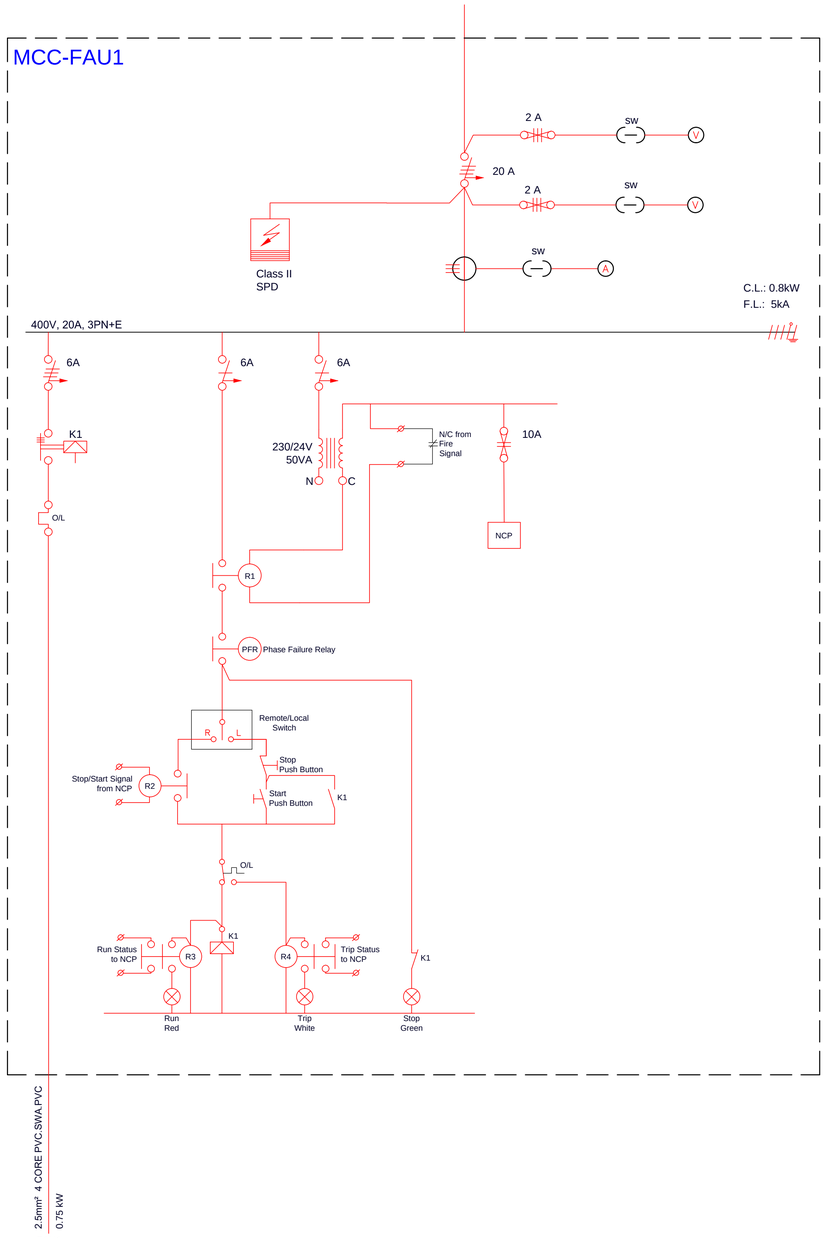

Notes:
1. IP 3x
2. Form 3b
3. MCC mounted inside the FAU.
4. Auxiliary contactors for monitoring Local / Remote switch via NCP.

Legend:

- AMMETER
- THREE PHASE CURRENT TRANSFORMER
- VOLT METER
- NORMALLY OPEN CONTACT
- REMOTE/LOCAL SELECTOR SWITCH
- THREE PHASE AND NEUTRAL SURGE ARRESTOR
- OUT GOING TERMINAL
- SINGLE PHASE CIRCUIT BREAKER
- OVERLOAD
- RELAY WITH MINIMUM 5 AMP RATING NO OR NC SWITCHING CONTACTS AS SHOWN
- KEY OPERATED INTERLOCK SYSTEM
- LED INDICATOR LIGHT
- SELECTOR SWITCH
- CONTROL TRANSFORMER/ LV TRANSFORMER X-VOLTAGE XX-VA RATING
- THREE PHASE CIRCUIT BREAKER
- MOTORISED CIRCUIT BREAKER
- THREE MAIN POLE CONTACTOR
- FOUR PHASE CIRCUIT BREAKER
- DOUBLE PHASE FUSE SWITCH
- TRIPLE PHASE FUSE SWITCH
- FOUR PHASE FUSE SWITCH
- CIRCUIT BREAKERS TO BE SLOW TRIP CURVE TYPE
- WITHDRAWABLE CASING
- THREE PHASE NEUTRAL AND EARTH

ISSUED FOR CONSTRUCTION
SUBJECT TO WORKSHOP DRAWING
AND P&ID DRAWING APPROVAL

D.O.	REV	DATE	** REVISION ** INDEX REFERENCE	REV BY	CHKD BY	AUTH BY	KKS APP	REFERENCE DRAWINGS
DM	1	08.03.2019	Issued for Construction	CP	DTC	DTC	-	- -
GG	0	30.10.2017	Issued for Tender	CP	DTC	DTC	-	- -

DRG REGISTR			AUTHORISED FOR ESKOM BY	DATE
DESIGN APPROVED	30.10.2017	CP	C.Zdziarski	28-05-2009
KKS APP	-	-	& PARTNERS	
DO AUTH	30.10.2017	CP		
CHKD BY	30.10.2017	CP		
DRAWN BY	30.10.2017	GG		

MEDUPI POWER STATION

WEIGH BRIDGE GATE HOUSE MCC: HVAC ELECTRICAL SINGLE LINE

08073- WGB - 110 - ME

0.84/50892

SHEET	REV
2	1

Designer:	Corrie Prinsloo	SCALE	NTS
Pr. Eng No:	20020197		

Eskom Enterprises

SIZE A1L
GROOTTE