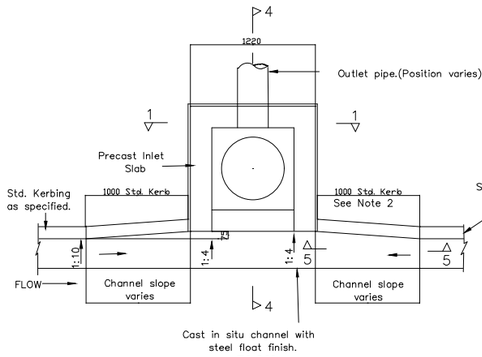

PLAN

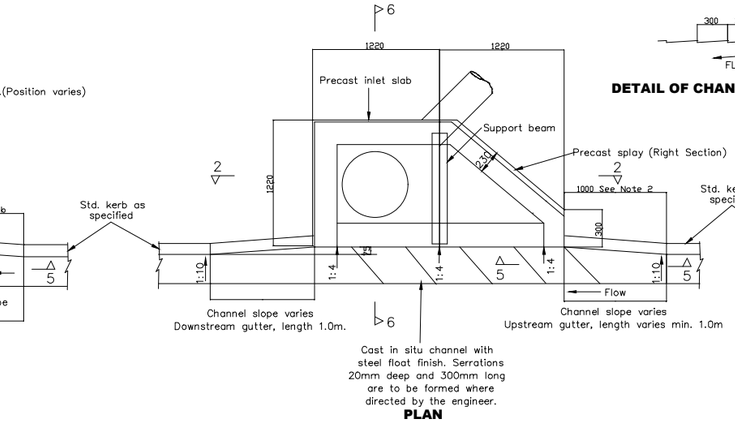

PLAN

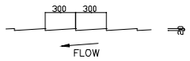

DETAIL OF CHANNEL SERRATIONS

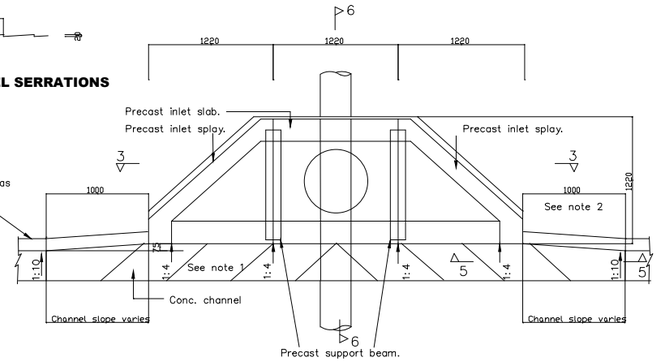

PLAN

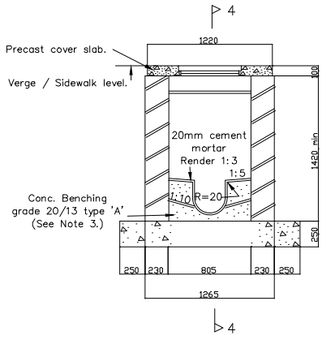

SECTION 1 - 1

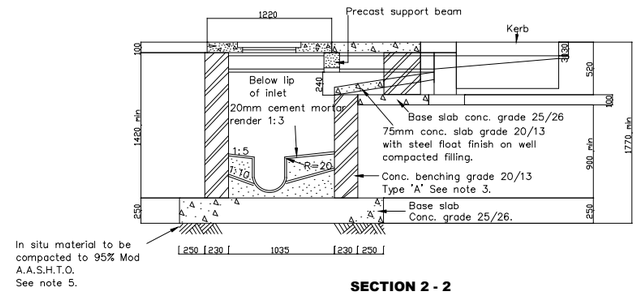

SECTION 2 - 2

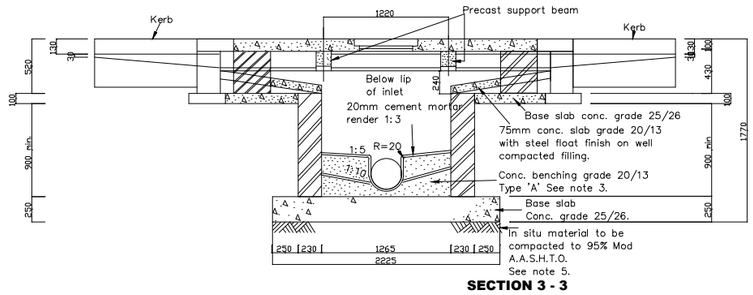

SECTION 3 - 3

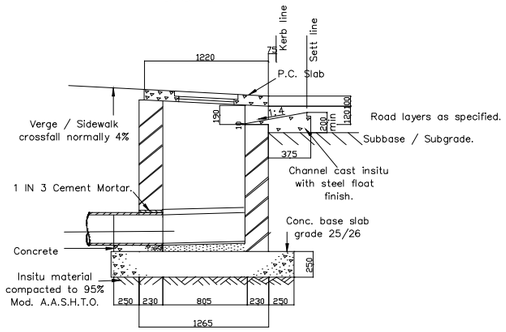

SECTION 4 - 4

GRADED CHANNEL SINGLE S.W. INLET TYPE 'S1'

1) Catchpit face to be set back 75mm from kerb line.
2) 1.0m transition from kerb line to catchpit line.
3) Type A benching to be used for S.W. on continuous pipelines. For S.W. inlets located at the head of the pipeline, the benching need only be dished at a grade of 1:10 to the outlet.
4) Max. depth of inlet after which a manhole type structure is to be detailed.

Inlet Type	Max. depth (F.R.L. Invert)
S	2.0
D	3.0

5) The insitu ground must be compacted to 95% Mod. A.A.S.H.T.O. prior to the inlet base slab being cast. If this density cannot be attained the insitu material must be removed to a depth of 300mm and replaced with a selected backfill.

6)

PRECAST CONCRETE UNIT	DRG.No.
Inlet cover support beam.	38854
Inlet slab.	38854
Plain inlet slab.	38854
Standard inlet splay.	38854
Light duty M.H. Cover.	38853

7) Gutter lengths:
In roads without full kerb and channel, minimum gutter lengths of 1.0m are to be provided on both upstream and downstream sides, Where additional upstream lengths are required this will not be indicated on the road S.W. drawing.
Upstream gutter lengths shall not be less than the following :–

Road Grade	Upstream Gutter Length
0 – 2%	1 m
2 – 4%	2 m
4 – 6%	3 m
6 – 8%	4 m
> 8%	5 m

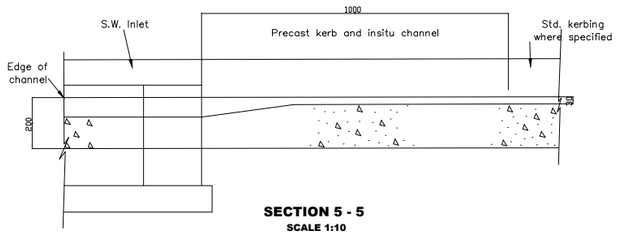

SECTION 5 - 5
SCALE 1:10

SINGLE SPLAY S.W. INLET - RIGHT TYPE 'S2' (MIRRORED FOR LEFT)

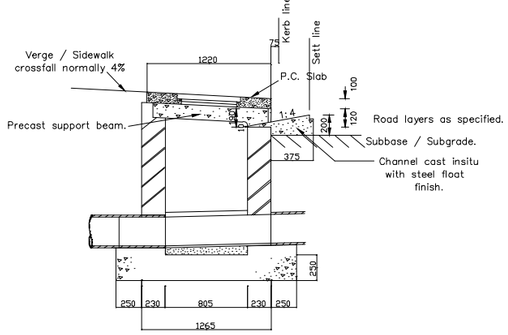

SECTION 6 - 6

DOUBLE SPLAY SINGLE S.W. INLET TYPE "D3"

SCALE 1:25

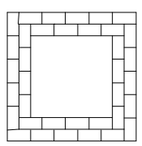

PATTERN A

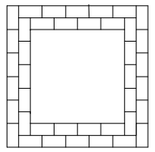

PATTERN B

TO BE USED FOR THE FOLLOWING INTERNAL DIMENSIONS.

805mm	920mm
1035mm	1150mm
1265mm	1380mm
1495mm	1610mm

BRICK LAYING PATTERNS

SCALE 1:25

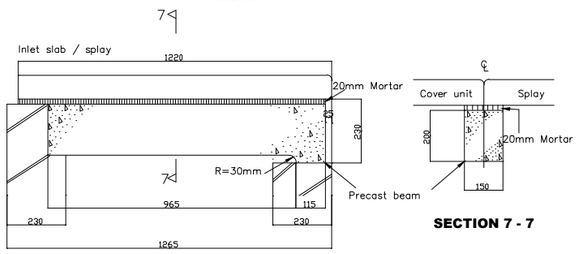

SECTION 7 - 7

BEAM POSITION DETAILS

SCALE 1:10

GENERAL:

A. ALL WORK TO BE CARRIED OUT IN ACCORDANCE WITH THE RELEVANT SABS 1200 SPECIFICATIONS.

B. THE CONTRACTOR MUST ARRANGE FOR CONTROL TESTING AT FREQUENCIES SPECIFIED IN THE RELEVANT SABS 1200 SPECIFICATION. COSTS FOR CONTRACTORS ACCOUNT CONTROL TESTING WILL BE FOR THE CONTRACTORS ACCOUNT.

C. SHOULD THE CONTRACTOR DISCOVER ANY DISCREPANCIES IN THE DRAWINGS, THESE DISCREPANCIES MUST BE BROUGHT TO THE ATTENTION OF THE ENGINEER IMMEDIATELY. NO ASSUMPTIONS MUST BE MADE.

D. SHOULD THE CONTRACTOR WISH TO USE ANY MATERIALS OTHER THAN THOSE SPECIFIED, HE MUST OBTAIN WRITTEN APPROVAL FROM THE ENGINEER TO DO SO.

E. ANY DESIGN CHANGES DURING CONSTRUCTION MUST BE ISSUED UNDER SITE SITE INSTRUCTION, AFTER APPROVAL BY THE ENGINEER

F. ALL EXISTING SERVICES TO BE PROVED & VERIFIED PRIOR TO WORK COMMENCING. ANY EXISTING SERVICES THAT IS DAMAGED BY THE CONTRACTOR AND IS SHOWN ON THE CONSTRUCTION DRAWINGS OR INDICATED TO THE CONTRACTOR BY THE ENGINEER, MUST BE REPAIRED BY THE CONTRACTOR AT HIS OWN COST.

G. IT IS THE CONTRACTORS RESPONSIBILITY TO ENSURE THAT ALL STORMWATER RUNOFF IS CONTROLLED TO PREVENT DAMAGE TO THE WORKS, EXISTING STRUCTURES AND SURROUNDING PROPERTIES, DURING THE CONSTRUCTION PROCESS.

Revision	Date	Description
A	18.07.2022	ISSUED FOR APPROVAL

NOTE:No construction work to commence until land and servitude acquisitions have been completed

Acquisitions completed

Date Engineer

UNDERGROUND SERVICES CHECKED

SERVICE	DATE	SIGNATURE
S.W.DRAINS		
SEWERS		
WATER MAINS		
G.P.O.CABLES		
ELECTRIC CABLES		
S.A.R. CABLES		N/A
E.A.C. CABLES		
OIL PIPE LINE		

NOTE: Only underground services affected by new construction work are shown.
Care must be taken during excavations for road foundations, trenches etc...to avoid damage to underground services such as sewers, drains, cables, water mains and connections. Wherever possible these must be located before work proceeds.

Contract No N/A

TRANSNET national ports authority

STANDARD DETAIL

STORMWATER INLET DETAILS

DATE	2022-07-18	RM - DESIGN CENTRE MANAGER
SCALE	AS SHOWN	
DESIGNED BY	RV	RM - PORT ENGINEER
CHECKED BY	SN	
DRAWN BY	RV	RM - PLAN DRAWER
CHECKED BY	SN	
PAPER SIZE	TRANSNET DRW. NO. DH63T0302-001-00	SHEET REV.
	CONSULTANT / CONTRACTOR DRW. NO.	