eTHEKWINI WATER SERVICES
WATER DESIGN BRANCH

Thandokuhle Reservoir:

The Construction of a 3Mℓ reinforced concrete reservoir, 150mm ø steel inlet, 300mm ø steel outlet pipelines and ancillary works

TENDER DRAWINGS
October 2021

eTHEKWINI WATER SERVICES

3 Prior Road,
Durban Central
Durban
4001

NAIDU CONSULTING

1ST FLOOR
No.5 THE BOULEVARD
WEST WAY OFFICE PARK
WESTVILLE,
DURBAN

LIST OF DRAWINGS

DWG No. (60356/...)	DESCRIPTION	SHT
002	RESERVOIR SITE PLAN LAYOUT	1 of 1
003	TYPICAL EARTHWORK CROSS SECTIONS	1 of 1
004	RESERVOIR FLOOR PLAN	1 of 1
005	RESERVOIR SECTION & DETAILS	1 of 1
006	RESERVOIR ROOF PLAN & DETAILS	1 of 1
007	DN300 OUTLET CHAMBER AND SCOUR DETAILS	1 of 1
008	DN150 INLET CHAMBER AND DETAILS	1 of 1
009	STANDARD ASSOCIATED DETAILS	1 of 2
009	STANDARD ASSOCIATED DETAILS	2 of 2
010	INLESECTIONST AND OUTLET PIPELINE PLAN AND LONG	1 of 1
011	DN200 IN-LINE INLET METER	1 of 1
012	DN100 IN-LINE OUTLET METER	1 of 1
013	TYPICAL SCOUR VALVE CHAMBER	1 of 1
014	TYPICAL SCOUR VALVE CHAMBER	1 of 1
015	DN150 CROSS CONNECTION CHAMBER	1 of 1
016	STORMWATER PLAN AND LONGSECTIONS	1 of 1
017	ROAD PLAN AND SECTIONS	1 of 1
018	ACCESS ROAD LONG SECTION AND CROSS SECTION	1 of 1
019	TELEMETRY ROOM	1 of 1

STANDARD DETAILS

45001	THRUST BLOCK	1 of 1
45002	TYPICAL TRENCH DETAILS	1 of 1
45005	GRP ACCESS LADDER: PLAN, SECTION & DETAILS	1 of 2
45005	GRP ACCESS LADDER: PLAN, SECTION & DETAILS	2 of 2
68184	WIRE MESH SECURITY FENCE AND GATE	1 of 1
68308	1200mm SQ MANHOLE COVER AND FRAME	1 of 1
45483	50-150 DIRT BOX REV 4	1 of 1
45484	200-400 DIRT BOX REV 5	1 of 1

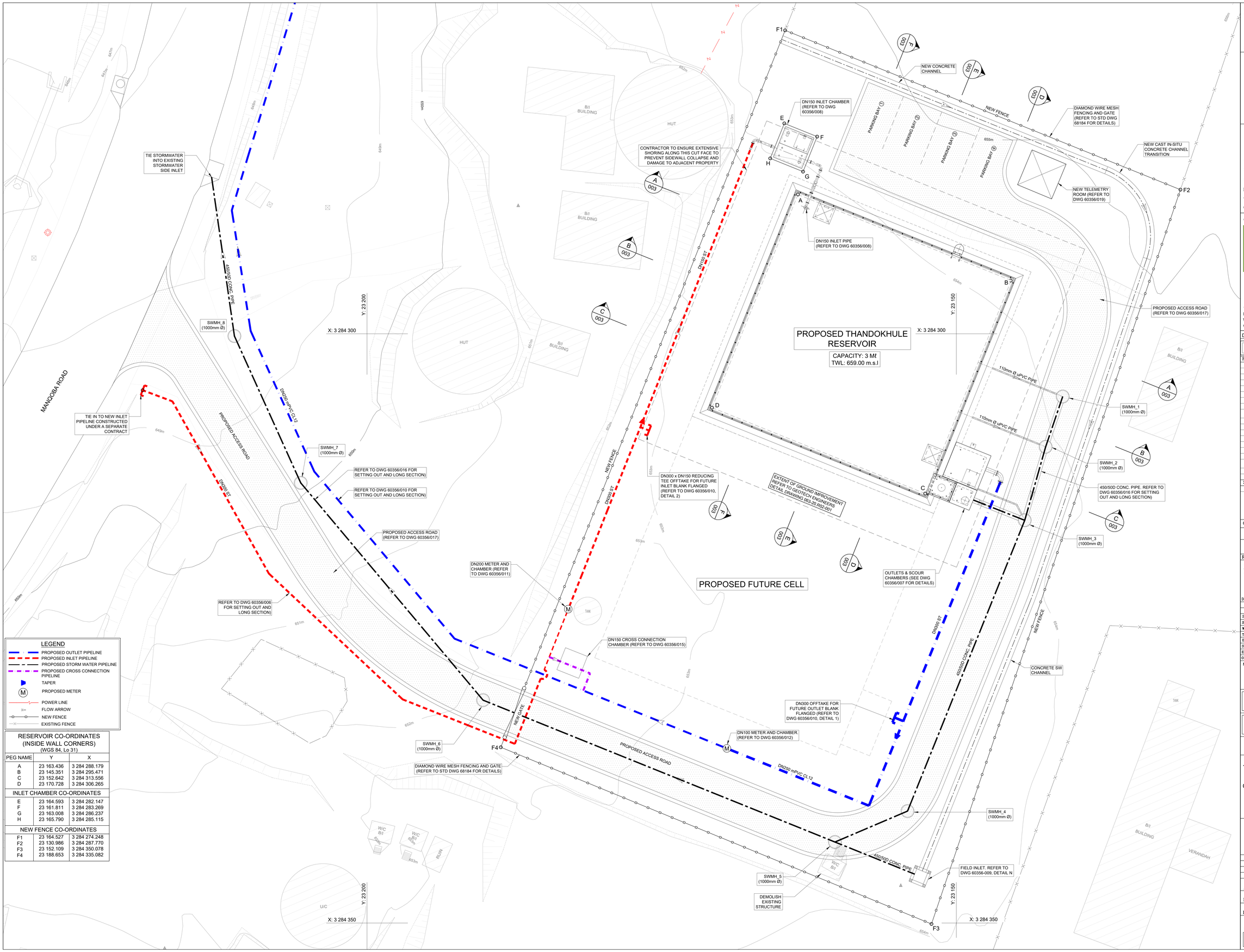

LEGEND

- PROPOSED OUTLET PIPELINE
- PROPOSED INLET PIPELINE
- PROPOSED STORM WATER PIPELINE
- PROPOSED CROSS CONNECTION PIPELINE
- TAPER
- (M) PROPOSED METER
- POWER LINE
- FLOW ARROW
- NEW FENCE
- EXISTING FENCE

RESERVOIR CO-ORDINATES (INSIDE WALL CORNERS) (WGS 84, Lo 31)		
PEG NAME	Y	X
A	23 163.436	3 284 288.179
B	23 145.351	3 284 295.471
C	23 152.642	3 284 313.556
D	23 170.728	3 284 306.265
INLET CHAMBER CO-ORDINATES		
E	23 164.593	3 284 282.147
F	23 161.811	3 284 283.269
G	23 163.008	3 284 286.237
H	23 165.790	3 284 285.115
NEW FENCE CO-ORDINATES		
F1	23 164.527	3 284 274.248
F2	23 130.986	3 284 287.770
F3	23 152.109	3 284 350.078
F4	23 188.653	3 284 335.082

eTHEKWINI WATER SERVICES

WATER DESIGN BRANCH — eTHEKWINI

REDUCED PLAN USE SCALE BELOW

0 10 20 30 40 50 60 70

70mm ON ORIGINAL PLAN

LEGEND

EXISTING UNDERGROUND SERVICES ARE AS SHOWN BELOW.

- SEWERS AND M.H'S
- STORM WATER DRAINS AND M.H'S
- WATER MAINS AND VALVES
- ELECTRICITY CABLES
- TELKOM CABLES
- OIL PIPELINES

CONSULTANT:

NAIDU CONSULTING

1st Floor
No.5 The Boulevard
West Way Office Park
Westville, Durban

Tel : +27 (0) 31 265 6007
Fax : +27 (0) 31 265 6011
E-mail : info@naiduconsulting.com

DRAWING No.: D732-52-5001

FOR TENDER

Ref Drg.	Description	
60356/003	TYPICAL EARTHWORK CROSS SECTIONS	1 of 1
60356/004	RESERVOIR FLOOR PLAN	1 of 1
60356/005	RESERVOIR SECTION AND DETAILS	1 of 1
60356/006	RESERVOIR ROOF PLAN AND DETAILS	1 of 1
60356/007	DN300 OUTLET CHAMBER AND SCOUR DETAILS	1 of 1
60356/008	DN150 INLET CHAMBER AND DETAILS	1 of 1
60356/009	STANDARD ASSOCIATED DETAILS	1 of 2
60356/009	STANDARD ASSOCIATED DETAILS	2 of 2
60356/010	INLET AND OUTLET PIPELINE PLAN AND LONG SECTIONS	1 of 1
60356/011	DN200 IN-LINE INLET METER	1 of 1
60356/012	DN100 IN-LINE OUTLET METER	1 of 1
60356/013	TYPICAL AIR VALVE CHAMBER	1 of 1
60356/014	TYPICAL SCOUR VALVE CHAMBER	1 of 1
60356/015	DN150 CROSS CONNECTION CHAMBER	1 of 1
60356/016	STORMWATER PLAN AND LONGSECTIONS	1 of 1
60356/017	ROAD PLAN AND SECTIONS	1 of 1
60356/018	ACCESS ROAD LONG SECTION AND CROSS SECTION	1 of 1
60356/019	TELEMETRY ROOM	1 of 1

Standard Drawings

68184	WIRE MESH SECURITY FENCE & GATE	1 of 1

Geotech Ref. Drawings

063-20.R02-001	Detail of Ground Improvement for Proposed Reservoir

Revision	Date	Description
0	OCT. 2021	FOR TENDER

NOTE:No construction work to commence until land and servitude acquisitions have been completed

Acquisitions completed:

Date Engineer

NORTH POINT

UNDERGROUND SERVICES CHECKED –

SERVICE	DATE	SIGNATURE
S.W DRAINS		
SEWERS		
WATERMAINS		
TELKOM CABLES		
ELECTRIC CABLES		
S.A.R CABLES		
E.S.C CABLES		
OIL PIPE LINE		

NOTE: Only underground services affected by new construction are shown. Care must be taken during excavations for road foundations,trenches etc.to avoid damage to underground services such as sewers,drains,cables,watermains and connections.Wherever possible these must be located before work begins.

Contract No. WS 7400

Project No. D732

Planning Unit EWS

Project Title

THANDOKUHLE RESERVOIR COMPARTMENT 1

CONSTRUCTION OF A 3ML REINFORCED CONCRETE RESERVOIR, 150mm Ø STEEL INLET, 300mm Ø STEEL OUTLET PIPELINES AND ASSOCIATED WORKS

Drawing Title

SITE PLAN

Scales : 1:200

Original paper size : A0

Designed : D. Ramghulam — Date : May 2021

Checked : A. Goorun — Drawn : N. Adams

Area Engineer (W.O.)

Manager (W.D.)

Director (Water)

E.Msweli – Head: Water & Sanitation Unit

Drawing No. 60356/002 — Sheet 1 of 1 — Rev. 0

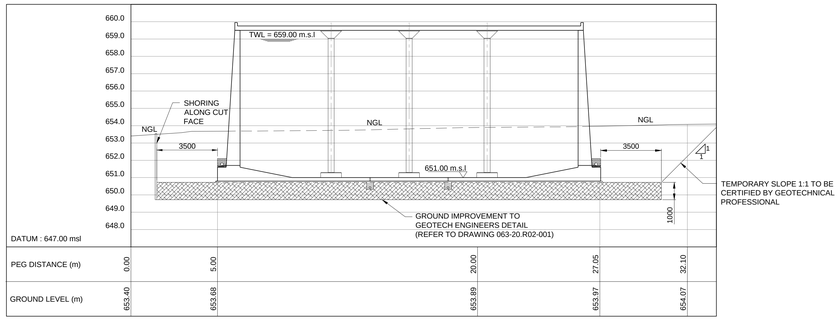

SECTION A-A / 002
SCALE HORIZ = 1:100
VERT = 1:100

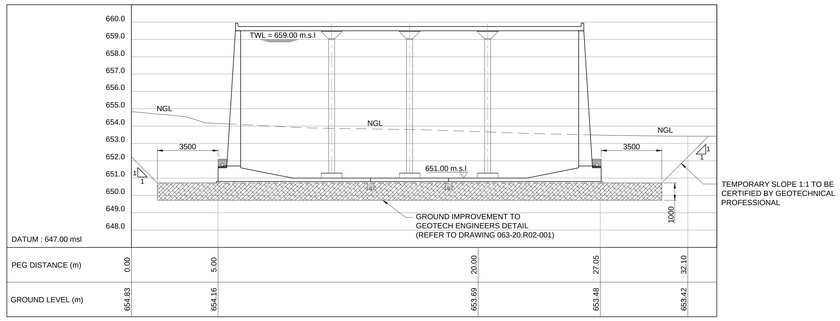

SECTION D-D / 002
SCALE HORIZ = 1:100
VERT = 1:100

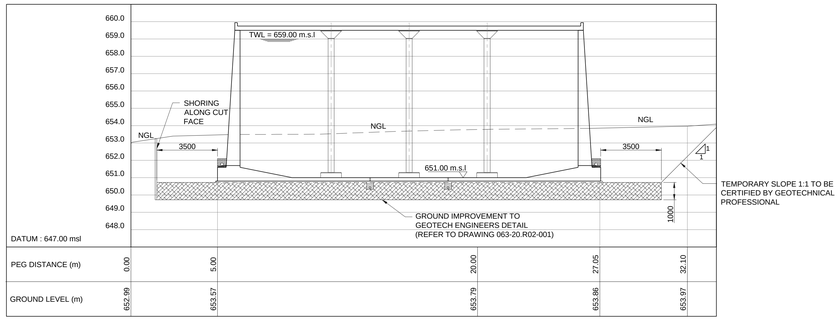

SECTION B-B / 002
SCALE HORIZ = 1:100
VERT = 1:100

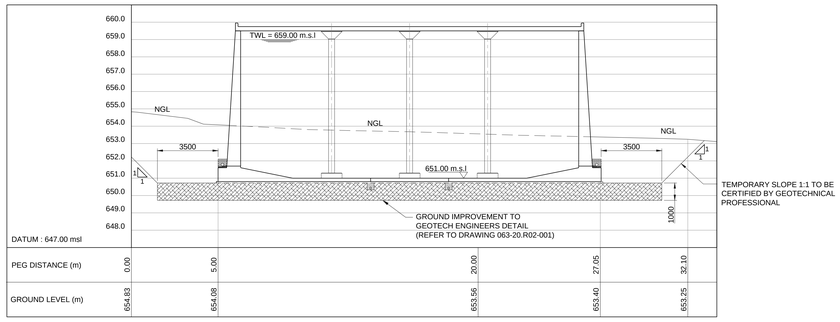

SECTION E-E / 002
SCALE HORIZ = 1:100
VERT = 1:100

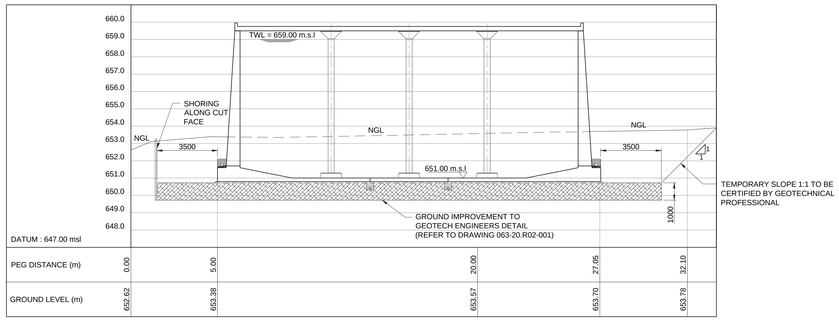

SECTION C-C / 002
SCALE HORIZ = 1:100
VERT = 1:100

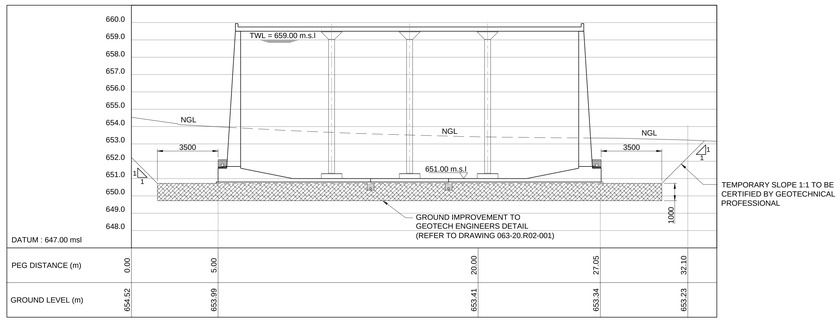

SECTION F-F / 002
SCALE HORIZ = 1:100
VERT = 1:100

eTHEKWINI
WATER SERVICES

WATER DESIGN BRANCH

eTHEKWINI

REDUCED PLAN USE SCALE BELOW

0 10 20 30 40 50 60 70

70mm ON ORIGINAL PLAN

CONSULTANT:

NAIDU CONSULTING

1st Floor
No.5 The Boulevard
West Way Office Park
Westville, Durban

Tel : +27 (0) 31 265 6007
Fax : +27 (0) 31 265 6011
E-mail : info@naiduconsulting.com

DRAWING No.: D732-53-5100

FOR TENDER

Ref Drg.	Description	
60356/002	RESERVOIR SITE PLAN LAYOUT	1 of 1
60356/004	RESERVOIR FLOOR PLAN	1 of 1
60356/005	RESERVOIR SECTION AND DETAILS	1 of 1

Standard Drawings

Reinforcing Ref. Drawings

Geotech Ref. Drawings

063-20.R02-001	Detail of Ground Improvement for Proposed Reservoir

Revision	Date	Description
0	OCT 2021	FOR TENDER PURPOSES ONLY

NOTE: No construction work to commence until land and servitude acquisitions have been completed.

Acquisitions completed:

Date Engineer

NORTH POINT

UNDERGROUND SERVICES CHECKED –

SERVICE	DATE	SIGNATURE
S.W DRAINS		
SEWERS		
WATERMAINS		
TELKOM CABLES		
ELECTRIC CABLES		
S.A.R CABLES		
E.S.C CABLES		
OIL PIPE LINE		

NOTE: Only underground services affected by new construction are shown. Care must be taken during excavations for road foundations,trenches etc.to avoid damage to underground services such as sewers,drains,cables,watermains and connections.Wherever possible these must be located before work begins.

Contract No. WS 7400

Project No. D732

Planning Unit EWS

Project Title

THANDOKUHLE RESERVOIR COMPARTMENT 1

CONSTRUCTION OF A 3ML REINFORCED CONCRETE RESERVOIR, 150mm Ø STEEL INLET, 300mm Ø STEEL OUTLET PIPELINES AND ASSOCIATED WORKS

Drawing Title

TYPICAL EARTHWORKS CROSS SECTIONS

Scales :	As Shown		
Original paper size :	A0		
Designed :	D. Ramghulam	Date :	May 2021
Checked :	A. Goorun	Drawn :	N. Adams

Area Engineer (W.O.)

Manager (W.D.)

Director (Water)

E.Msweli – Head: Water & Sanitation Unit

Drawing No.	Sheet	Rev.
60356/003	1 of 1	1

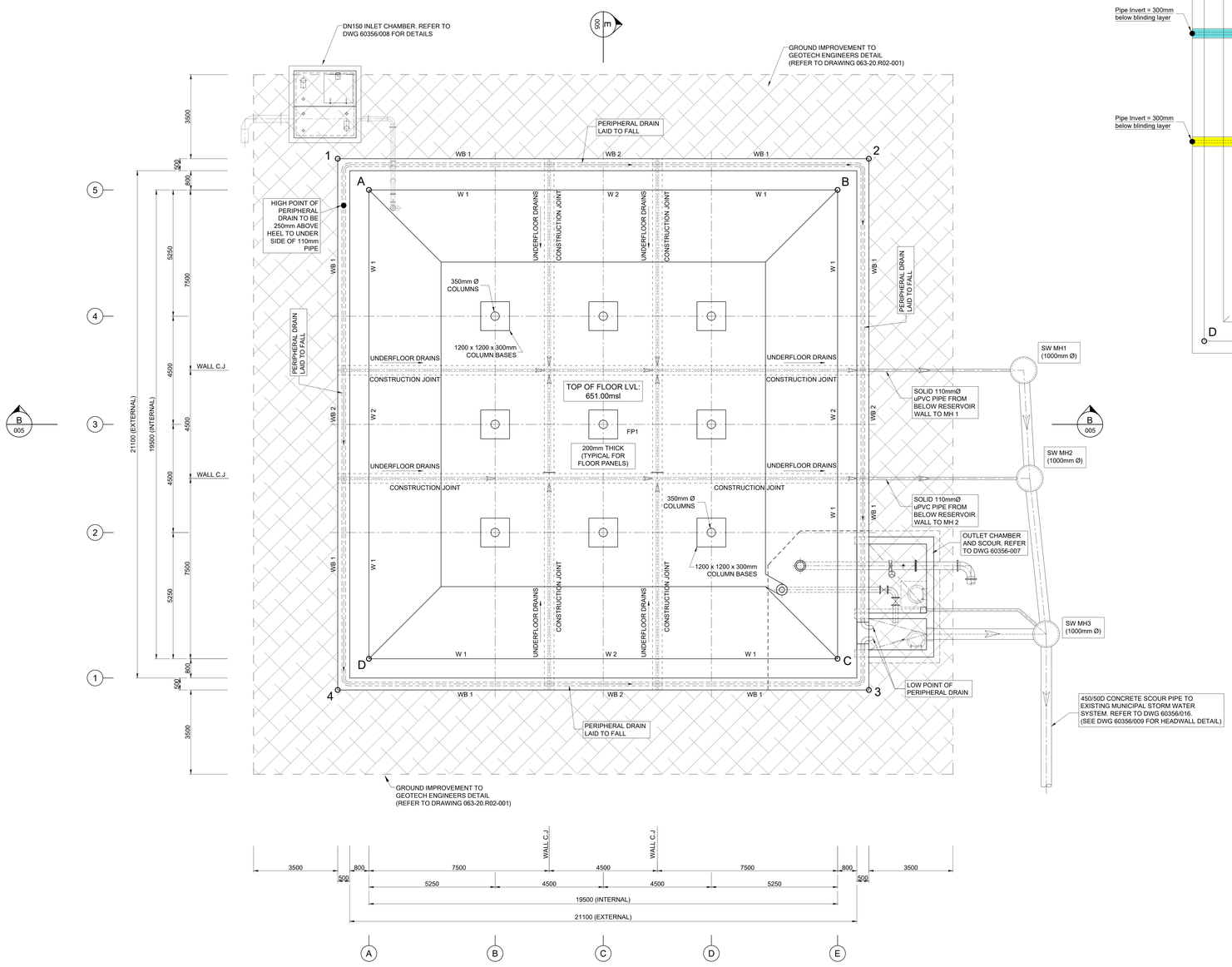

FLOOR PLAN LAYOUT

SCALE 1:75

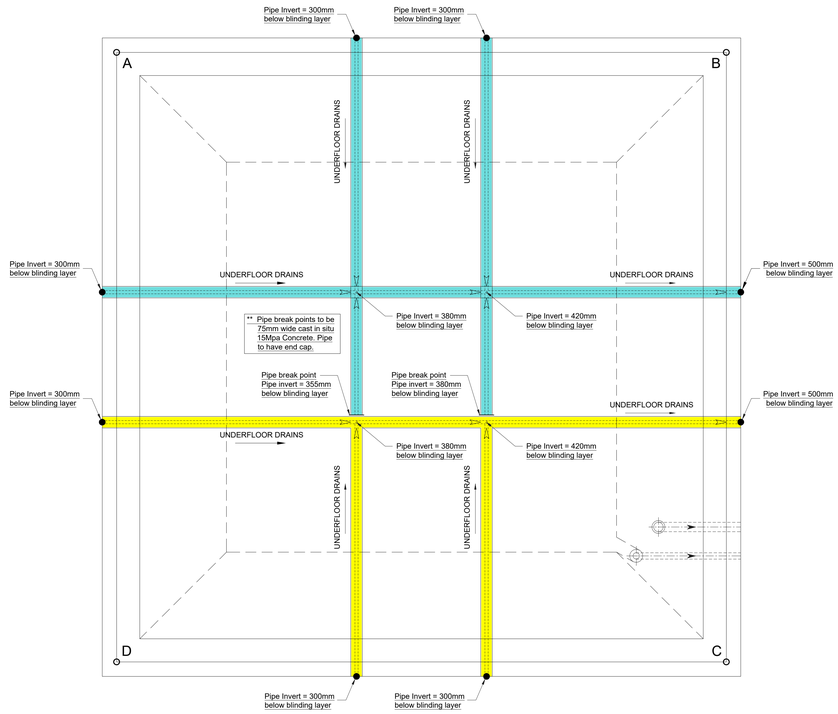

UNDERFLOOR DRAIN LAYOUT PLAN AND LEVELS

SCALE 1:75

LEGEND

* PREFIX "WB" DENOTES WALL BASE
* PREFIX "W" DENOTES WALL
* PREFIX "FP" DENOTES FLOOR PANEL

WB1	- 4 OFF
WB2	- 4 OFF
FP1	- 1 OFF
W1	- 4 OFF
W2	- 4 OFF

RESERVOIR CO-ORDINATES
SURVEY DATUM WG31 BASED ON LOCAL TRIG BEACON 92/3030

PEG NAME	Y	X
A	23 163.436	3 284 288.179
B	23 145.351	3 284 295.471
C	23 152.642	3 284 313.556
D	23 170.728	3 284 306.265
1	23 164.156	3 284 286.488
2	23 143.659	3 284 294.751
3	23 152.199	3 284 314.597
4	23 171.769	3 284 306.708

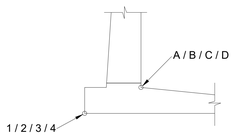

SECTION ON RESERVOIR WALL AND FOOTING

CONCRETE NOTES

1. CONCRETE :
   BLINDING/MASS CONCRETE: CLASS 15/19
   CHAMBERS: CLASS 25/19
   RESERVOIR: CLASS 35
   (AS PER SPECIFICATIONS)
2. CONCRETE COVER:

FLOOR SLAB	: 50mm
COLUMNS/COLUMN PEDESTALS	: 50mm
RESERVOIR WALL/BASE	: 50mm
ROOF SLAB TOP	: 40mm
ROOF SLAB BOTTOM	: 50mm

eTHEKWINI WATER SERVICES
WATER DESIGN BRANCH
eTHEKWINI

REDUCED PLAN USE SCALE BELOW
0 10 20 30 40 50 60 70

CONSULTANT:
NAIDU CONSULTING

1st Floor
No.5 The Boulevard
West Way Office Park
Westville, Durban
Tel : +27 (0) 31 265 6007
Fax : +27 (0) 31 265 6011
E-mail : info@naiduconsulting.com

DRAWING No.: D732-52-5250

FOR TENDER

Ref Drg.	Description	
60356/002	RESERVOIR SITE PLAN LAYOUT	1 of 1
60356/005	RESERVOIR SECTION AND DETAILS	1 of 1
60356/007	DN300 OUTLET CHAMBER AND SCOUR DETAILS	1 of 1
60356/009	STANDARD ASSOCIATED DETAILS	1 of 2
60356/009	STANDARD ASSOCIATED DETAILS	2 of 2

Standard Drawings

Reinforcing Ref. Drawings

Geotech Ref. Drawings

063-20.R02-001		Detail of Ground Improvement for Proposed Reservoir
0	OCT. 2021	FOR TENDER PURPOSES ONLY

Revision	Date	Description

NOTE: No construction work to commence until land and servitude acquisitions have been completed

Acquisitions completed:

Date Engineer NORTH POINT

UNDERGROUND SERVICES CHECKED –

SERVICE	DATE	SIGNATURE
S.W DRAINS		
SEWERS		
WATERMAINS		
TELKOM CABLES		
ELECTRIC CABLES		
S.A.R CABLES		
E.S.C CABLES		
OIL PIPE LINE		

NOTE: Only underground services affected by new construction are shown. Care must be taken during excavations for road foundations,trenches etc.to avoid damage to underground services such as sewers,drains,cables,watermains and connections.Wherever possible these must be located before work begins.

Contract No. WS 7400

Project No. D732

Planning Unit EWS

Project Title
THANDOKUHLE RESERVOIR COMPARTMENT 1
CONSTRUCTION OF A 3ML REINFORCED CONCRETE RESERVOIR, 150mm Ø STEEL INLET, 300mm Ø STEEL OUTLET PIPELINES AND ASSOCIATED WORKS

Drawing Title
RESERVOIR FLOOR PLAN

Scales : 1:75
Original paper size : A0
Designed : D. Ramghulam Date : May 2021
Checked : A. Goorun Drawn : N. Adams

Area Engineer (W.O.)

Manager (W.D.)

Director (Water)

E.Msweli – Head: Water & Sanitation Unit

Drawing No. 60356/004 Sheet 1 of 1 Rev. 0

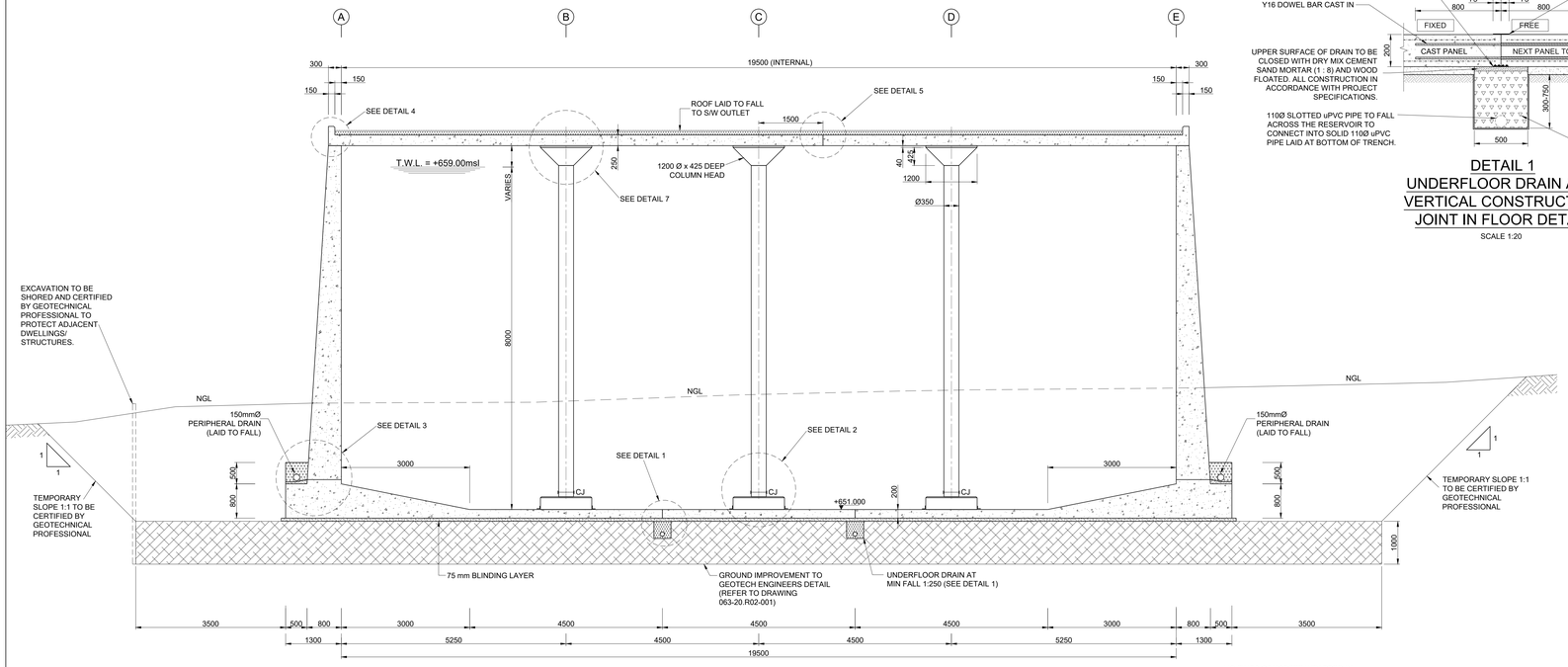

SECTION B / 004

SCALE 1:50

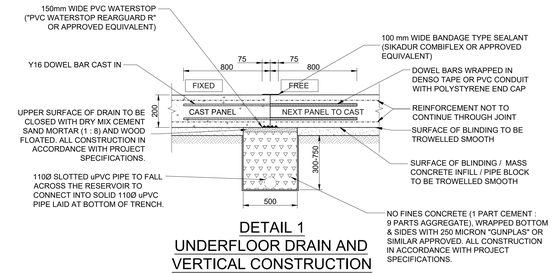

DETAIL 1
UNDERFLOOR DRAIN AND VERTICAL CONSTRUCTION JOINT IN FLOOR DETAIL

SCALE 1:20

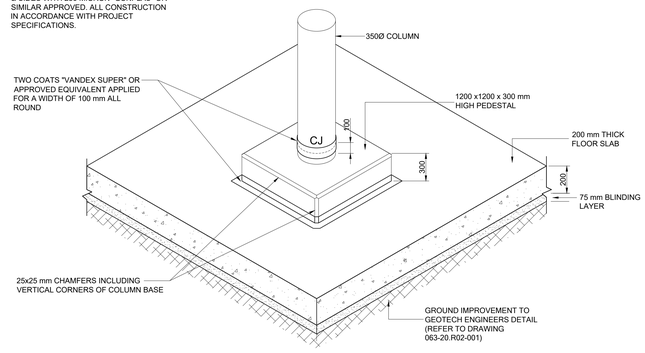

DETAIL 2

SCALE 1:20

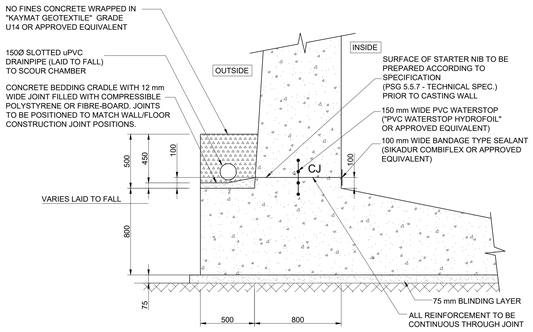

DETAIL 3

SCALE 1:20

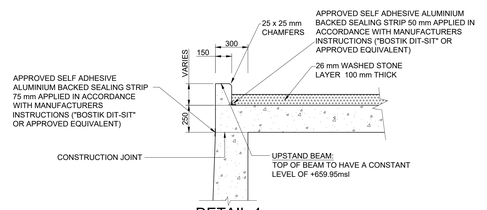

DETAIL 4

SCALE 1:20

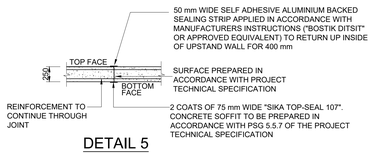

DETAIL 5
CONSTRUCTION JOINT DETAIL IN ROOF SLAB

SCALE 1:20

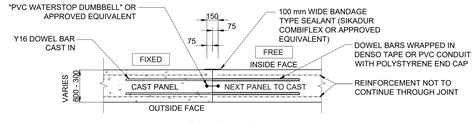

DETAIL 6
VERTICAL CONSTRUCTION JOINT IN WALL DETAIL

SCALE 1:20

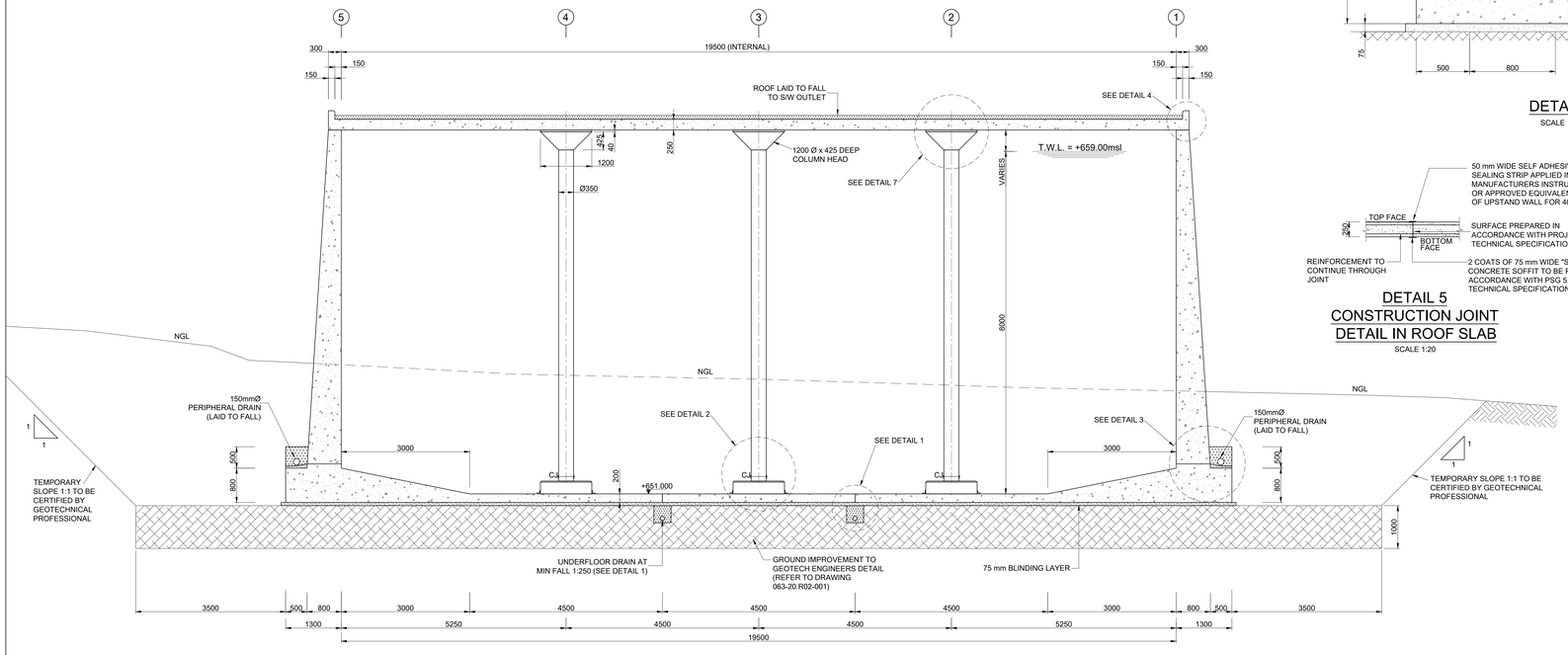

SECTION E / 004

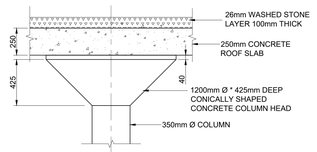

DETAIL 7

SCALE 1:20

eTHEKWINI WATER SERVICES

WATER DESIGN BRANCH

eTHEKWINI

REDUCED PLAN USE SCALE BELOW

0 10 20 30 40 50 60 70

70mm ON ORIGINAL PLAN

CONSULTANT:

NAIDU CONSULTING

1st Floor
No.5 The Boulevard
West Way Office Park
Westville, Durban

Tel : +27 (0) 31 265 6007
Fax : +27 (0) 31 265 6011
E-mail : info@naiduconsulting.com

DRAWING No.: D732-52-5251

FOR TENDER

Ref Drg.	Description	
60356/003	TYPICAL EARTHWORK CROSS SECTIONS	1 of 1
60356/004	RESERVOIR FLOOR PLAN	1 of 1
60356/006	RESERVOIR ROOF PLAN AND DETAILS	1 of 1
60356/007	DN300 OUTLET CHAMBER AND SCOUR DETAILS	1 of 1
60356/009	STANDARD ASSOCIATED DETAILS	1 of 2
60356/009	STANDARD ASSOCIATED DETAILS	2 of 2

Standard Drawings

Reinforcing Ref. Drawings

Geotech Ref. Drawings

063-20.R02-001	Detail of Ground Improvement for Proposed Reservoir

Revision	Date	Description
0	OCT. 2021	FOR TENDER PURPOSES ONLY

NOTE: No construction work to commence until land and servitude acquisitions have been completed

Acquisitions completed:

Date Engineer NORTH POINT

UNDERGROUND SERVICES CHECKED –

SERVICE	DATE	SIGNATURE
S.W DRAINS		
SEWERS		
WATERMAINS		
TELKOM CABLES		
ELECTRIC CABLES		
S.A.R CABLES		
E.S.C CABLES		
OIL PIPE LINE		

NOTE: Only underground services affected by new construction are shown. Care must be taken during excavations for road foundations,trenches etc.to avoid damage to underground services such as sewers,drains,cables,watermains and connections.Wherever possible these must be located before work begins.

Contract No. WS 7400

Project No. D732

Planning Unit EWS

Project Title
THANDOKUHLE RESERVOIR COMPARTMENT 1
CONSTRUCTION OF A 3ML REINFORCED CONCRETE RESERVOIR, 150mm Ø STEEL INLET, 300mm Ø STEEL OUTLET PIPELINES AND ASSOCIATED WORKS

Drawing Title
RESERVOIR SECTIONS, CONCRETE OUTLINE AND DETAILS

Scales : As Shown
Original paper size : A0
Designed : D. Ramghulam — Date : May 2021
Checked : A. Goorun — Drawn : N. Adams

Area Engineer (W.O.)

Manager (W.D.)

Director (Water)

E.Msweli – Head:Water & Sanitation Unit

Drawing No. 60356/005 | Sheet 1 of 1 | Rev. 0

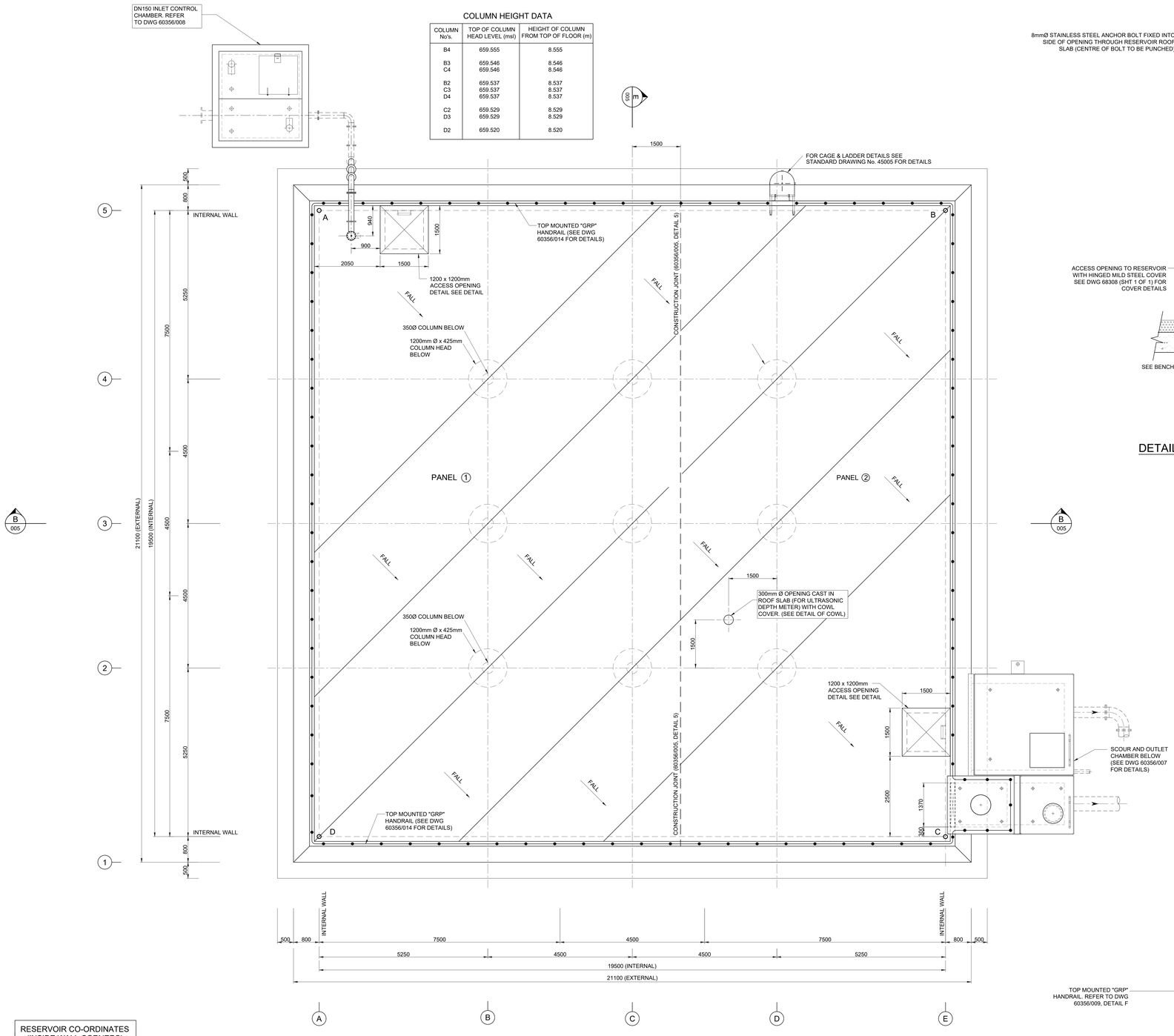

COLUMN HEIGHT DATA

COLUMN No's.	TOP OF COLUMN HEAD LEVEL (msl)	HEIGHT OF COLUMN FROM TOP OF FLOOR (m)
B4	659.555	8.555
B3 C4	659.546 659.546	8.546 8.546
B2 C3 D4	659.537 659.537 659.537	8.537 8.537 8.537
C2 D3	659.529 659.529	8.529 8.529
D2	659.520	8.520

ROOF PLAN LAYOUT

SCALE 1:50

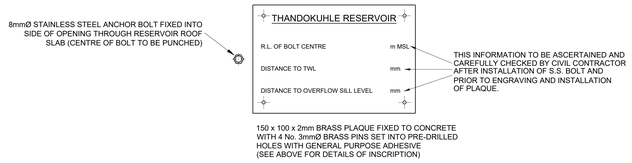

BENCH MARK

SCALE 1:2

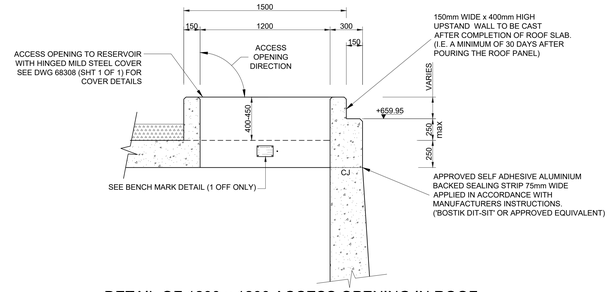

DETAIL OF 1200 x 1200 ACCESS OPENING IN ROOF

SCALE 1:20

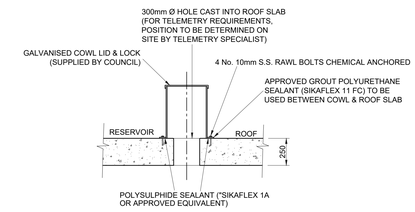

DETAIL OF COWL

SCALE 1:20

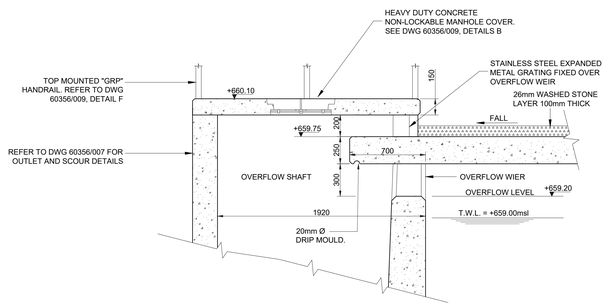

DETAIL OF ROOF DRAIN

SCALE 1:20

RESERVOIR CO-ORDINATES (INSIDE WALL CORNERS)

SURVEY DATUM WGS 84, LO 31

PEG NAME	Y	X
A	23 163.436	3 284 288.179
B	23 145.351	3 284 295.471
C	23 152.642	3 284 313.556
D	23 170.728	3 284 306.265

CONCRETE NOTES

1. CONCRETE :
   BLINDING/MASS CONCRETE: CLASS 15/19
   CHAMBERS: CLASS 25/19
   RESERVOIR: CLASS 35
   (AS PER SPECIFICATIONS)

2. CONCRETE COVER:
   FLOOR SLAB : 50mm
   COLUMNS/COLUMN PEDESTALS : 50mm
   RESERVOIR WALL/BASE : 50mm
   ROOF SLAB TOP : 40mm
   ROOF SLAB BOTTOM : 50mm

eTHEKWINI WATER SERVICES

WATER DESIGN BRANCH

REDUCED PLAN USE SCALE BELOW

0 10 20 30 40 50 60 70

70mm ON ORIGINAL PLAN

CONSULTANT:

NAIDU CONSULTING

1st Floor
No.5 The Boulevard
West Way Office Park
Westville, Durban

Tel : +27 (0) 31 265 6007
Fax : +27 (0) 31 265 6011
E-mail : info@naiduconsulting.com

DRAWING No.: D732-52-5252

FOR TENDER

Ref Drg.	Description	
60356/002	RESERVOIR SITE PLAN LAYOUT	1 of 1
60356/004	RESERVOIR FLOOR PLAN	1 of 1
60356/005	RESERVOIR SECTION AND DETAILS	1 of 1
60356/007	DN300 OUTLET CHAMBER AND SCOUR DETAILS	1 of 1
60356/008	DN150 INLET CHAMBER AND DETAILS	1 of 1
60356/009	STANDARD ASSOCIATED DETAILS	1 of 2
60356/009	STANDARD ASSOCIATED DETAILS	2 of 2

Standard Drawings

45005	GRP ACCESS LADDER: PLAN, SECTION & DETAILS	1 of 2
45005	GRP ACCESS LADDER: PLAN, SECTION & DETAILS	2 of 2
68308	1200mm SQ MANHOLE COVER AND FRAME	1 of 1

Reinforcing Ref. Drawings

Geotech Ref. Drawings

Revision	Date	Description
0	OCT 2021	FOR TENDER PURPOSES ONLY

NOTE: No construction work to commence until land and servitude acquisitions have been completed

Acquisitions completed:

Date Engineer

NORTH POINT

UNDERGROUND SERVICES CHECKED –

SERVICE	DATE	SIGNATURE
S.W DRAINS		
SEWERS		
WATERMAINS		
TELKOM CABLES		
ELECTRIC CABLES		
S.A.R CABLES		
E.S.C CABLES		
OIL PIPE LINE		

NOTE: Only underground services affected by new construction are shown. Care must be taken during excavations for road foundations,trenches etc.to avoid damage to underground services such as sewers,drains,cables,watermains and connections.Wherever possible these must be located before work begins.

Contract No. WS 7400

Project No. D732

Planning Unit EWS

Project Title

THANDOKUHLE RESERVOIR COMPARTMENT 1

CONSTRUCTION OF A 3ML REINFORCED CONCRETE RESERVOIR, 150mm Ø STEEL INLET, 300mm Ø STEEL OUTLET PIPELINES AND ASSOCIATED WORKS

Drawing Title

RESERVOIR ROOF PLAN

Scales : As Shown

Original paper size : A0

Designed : D. Ramghulam — Date : May 2021

Checked : A. Goorun — Drawn : N. Adams

Area Engineer (W.O.)

Manager (W.D.)

Director (Water)

E.Msweli – Head:Water & Sanitation Unit

Drawing No.	Sheet	Rev.
60356/006	1 of 1	0

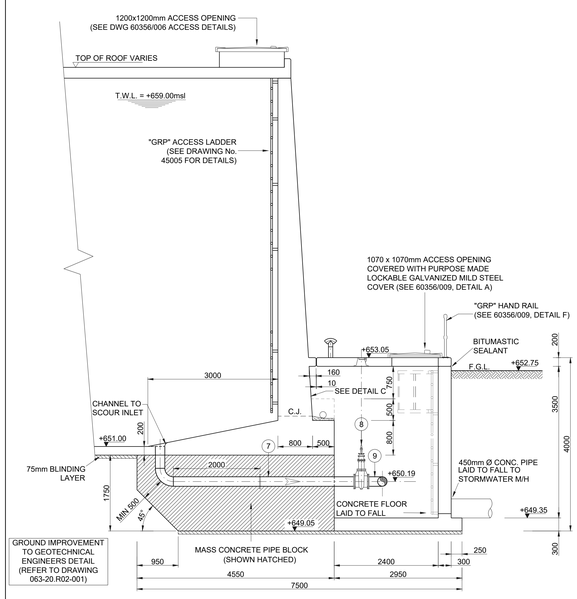

SECTION B-B (SCOUR CHAMBER)

SCALE 1:50

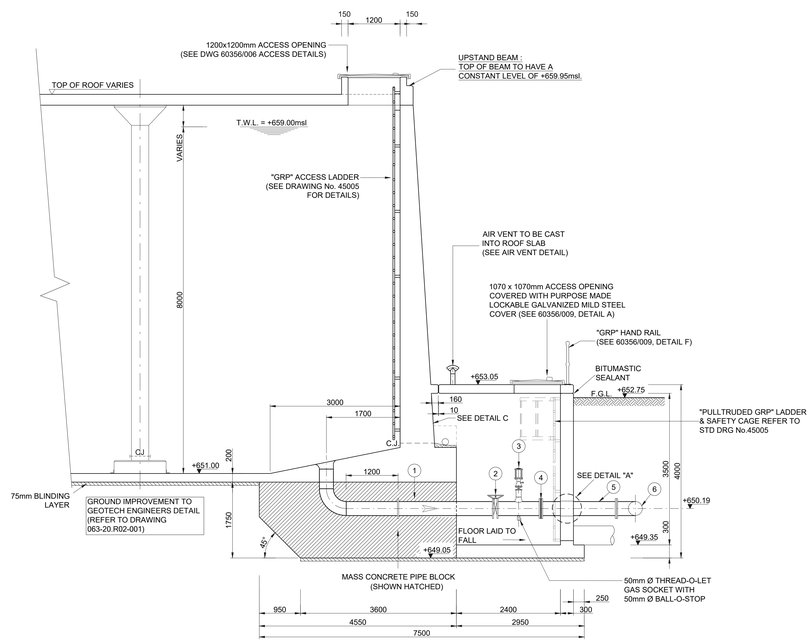

SECTION C-C (OUTLET CHAMBER)

SCALE 1:50

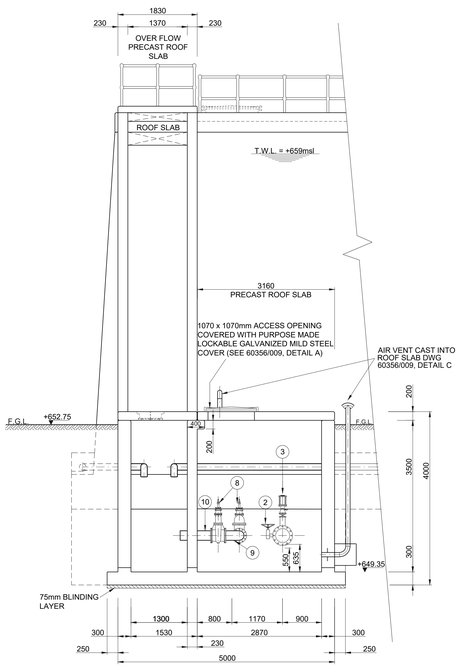

SECTION D-D

SCALE 1:50

NOTE:
FOR RELATED NOTES SEE DWG 60356/008

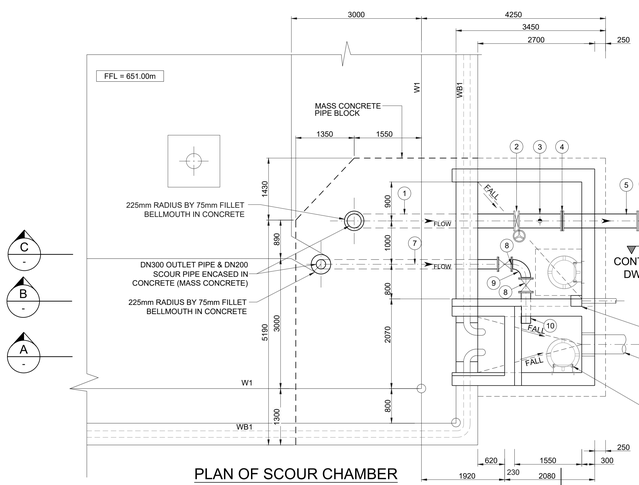

PLAN OF SCOUR CHAMBER LEVEL 652.50msl

SCALE 1:50

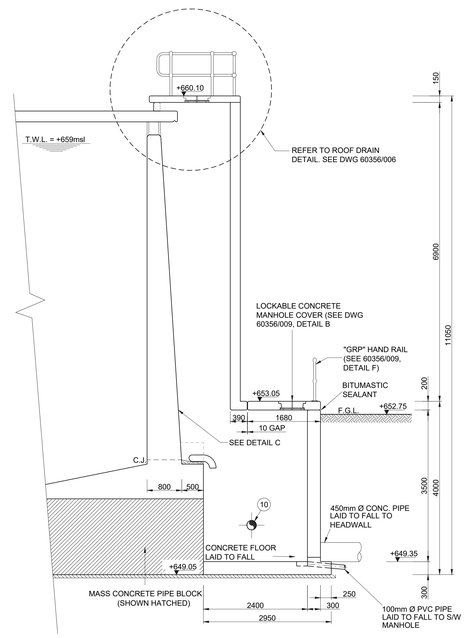

SECTION A-A (WET WELL)

SCALE 1:50

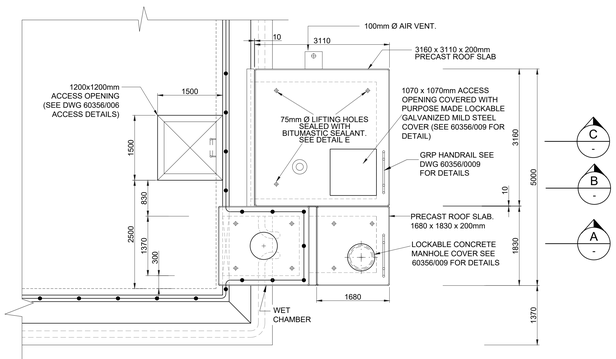

PLAN ABOVE LEVEL 660.50msl

PIPEWORK & FITTINGS SCHEDULE							
find	NOM DIA	DESCRIPTION	DIMENSIONS (mm) A	B	C	F/F	No. OF
SCHEDULE FOR OUTLET PIPEWORK							
1	DN300	SPECIAL: 90DEG LONG RADIUS BEND WITH SPOOL PIPE WELDED TO BOTH ENDS, FLANGED ONE END (FLANGED END TO MATCH ITEM 2). PUDDLE FLANGE PLACED 1200mm FROM BEND. SPOOL PIPE CUT TO SUIT, LENGTHS TO BE 450mm ONE END AND 3400mm OTHER END.					1
2	DN300	PN16 WAFER BUTTERFLY VALVE TYPE 2 SEMI LUGGED (E.P.D.M. LINED) TO EN1092-1 PN16. TYPE 'ISORIA' BY AMRI OR SIMILAR APPROVED, COMPLETE WITH HANDWHEEL, GEARBOX, NUTS, BOLTS, WASHERS AND GASKETS. VALVE TO BE INSTALLED THAT DISC IS HORIZONTAL TO FLOW.				78	1
3	DN300	SPOOL PIECE C/W DN100 AIR VALVE ASSEMBLY AND DN50 THREAD-O-LET GAS SOCKET WITH DN50 BRASS BALL-O-STOP CENTRALLY PLACED, FLANGED BOTH ENDS. ONE FLANGE TO MATCH ITEM 2. SEE AIR VALVE DETAILS				1000	1
4	DN300	INSULATING FLANGE (INCLUSIVE OF ALL SLEEVES AND BOLTS).					1
5	DN300	SPOOL PIECE, FLANGED BOTH ENDS.				1740	1
6	DN300	SPECIAL: 90DEG LONG RADIUS BEND WITH 100MM SPOOL PIPE WELDED ON BOTH ENDS, FBE					1
SCHEDULE FOR SCOUR PIPEWORK							
7	DN200	SPECIAL: 90DEG LONG RADIUS BEND WITH SPOOL PIPE WELDED TO BOTH ENDS, FLANGED ONE END. (FLANGED END TO MATCH ITEM 2). PUDDLE FLANGE PLACED 2000MM FROM BEND. SPOOL PIPE CUT TO SUIT, LENGTHS TO BE 507MM ONE END AND 4335MM OTHER END.					1
8	DN200	SABS 664 PN16 WEDGE GATE VALVE WITH CAP TOP.				317	2
9	DN200	90DEG LONG RADIUS BEND, FLANGED BOTH ENDS.					1
10	DN200	SPOOL PIECE, FLANGED ONE END.				720	1

NOTES:
ALL SPECIALS PIPE EPOXY COATED (S.F.E) TO PROJECT SPECIFICATIONS UNLESS OTHERWISE STATED. ALL PIPE PIPETO SANS 719, GRADE X42, 4.5mm THICK.
ALL FLANGES PIPETO TABLE 1600/3 (SANS 1123 - 2011).
IF FACE TO FACE DIMENSION OF FITTINGS DIFFER TO ACTUAL THE CONTRACTOR MUST INFORM THE ENGINEER PRIOR TO PIPE FABRICATION.

ABBREVIATIONS :
DN - DIAMETER NOMINAL
OD - OUTSIDE DIAMETER
ID - INSIDE DIAMETER
M.S - MILD STEEL
S.S - STAINLESS STEEL
H.D.G.M.S - HOT DIPPED GALVANISED MILD STEEL
G.M.S - GALVANISED MILD STEEL
C.I - CAST IRON
F.R.L. - FINAL ROAD LEVEL
F.O.E - FLANGED ONE END
F.B.E - FLANGED BOTH ENDS
F.A.R - FLANGED ALL ROUND
L.R.B - LONG RADIUS BEND
S.R.B - SHORT RADIUS BEND
F/F - FACE TO FACE DIMENSION
C/F - CENTRE TO FACE DIMENSION
P.C. - PLAIN END COATED
P.E. - PLAIN END (FOR WELDING)
S.F.E. - SOLVENT FREE EPOXY

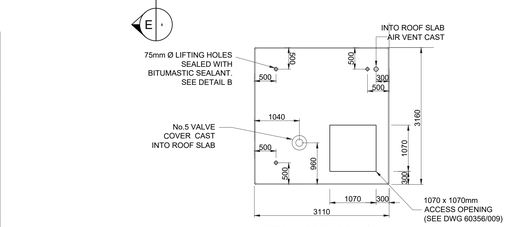

PLAN OF ROOF SLAB OUTLET CHAMBER

SCALE 1:50

1830mm x 1800mm x 200mm PRECAST ROOF SLAB. (WET CHAMBER)

PLAN OF ROOF SLAB OVERFLOW SHAFT

SCALE 1:50

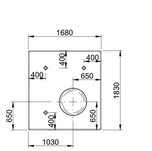

1680mm x 1830mm x 200mm PRECAST ROOF SLAB. (SCOUR CHAMBER)

PLAN OF ROOF SLAB SCOUR CHAMBER

SCALE 1:50

DETAIL B

N.T.S

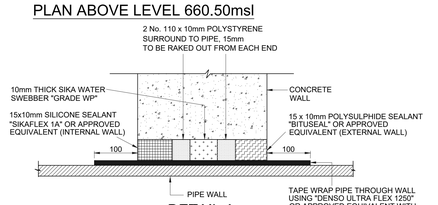

DETAIL A

N.T.S.

ITEM	PIPEWORK SCHEDULE - PN 10 (UNLESS OTHERWISE STATED)
A	100mm Ø AIR VALVE - PN16
B	100mm Ø x 100mm LONG SPOOL PIECE (FLANGED ONE END TO SUIT AIR VALVE)
C	150mm x 100mm Ø CONCENTRIC REDUCER (ANSI. B16.9) F.O.E. FLANGE TO MATCH ITEM D
D	150mm Ø WAFER BUTTERFLY VALVE (E.P.D.M. LINED) - PN16 SUPPLIED BY THE CONTRACTOR.
E	150mm Ø x 200mm LONG SPOOL PIECE (F.O.E.) FLANGE TO MATCH ITEM D
F	200mm x 150mm Ø CONCENTRIC REDUCER (ANSI. B16.9) .
G	15mm Ø GAS SOCKET
H	15mm Ø BALL-O-STOP FEMALE TO MALE

NOTE : ALL FLANGES TO BE TO TABLE 1600/3 (SABS 1123)

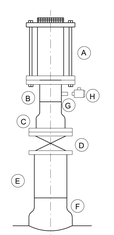

AIR VALVE DETAIL

N.T.S

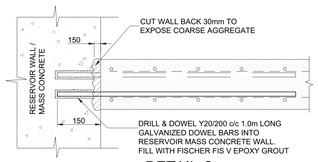

DETAIL C DOWEL DETAIL

1 : 10

eTHEKWINI WATER SERVICES
WATER DESIGN BRANCH
eTHEKWINI

REDUCED PLAN USE SCALE BELOW
0 10 20 30 40 50 60 70
70mm ON ORIGINAL PLAN

CONSULTANT:
NAIDU CONSULTING

1st Floor
No.5 The Boulevard
West Way Office Park
Westville, Durban
Tel : +27 (0) 31 265 6007
Fax : +27 (0) 31 265 6011
E-mail : info@naiduconsulting.com

DRAWING No.: D732-52-5253

FOR TENDER

Ref Drg.	Description	
60356/002	RESERVOIR SITE PLAN LAYOUT	1 of 1
60356/003	TYPICAL EARTHWORK CROSS SECTIONS	1 of 1
60356/004	RESERVOIR FLOOR PLAN	1 of 1
60356/005	RESERVOIR SECTION AND DETAILS	1 of 1
60356/006	RESERVOIR ROOF PLAN AND DETAILS	1 of 1
60356/009	STANDARD ASSOCIATED DETAILS	1 of 2
60356/009	STANDARD ASSOCIATED DETAILS	2 of 2
60356/010	INLET AND OUTLET PIPELINE PLAN AND LONG SECTIONS	1 of 1
60356/016	STORMWATER PLAN AND LONGSECTIONS	1 of 1

Standard Drawings

45001	THRUST BLOCK	1 of 1
45002	TYPICAL TRENCH DETAILS	1 of 1
45005	GRP ACCESS LADDER: PLAN, SECTION & DETAILS	1 of 2
45005	GRP ACCESS LADDER: PLAN, SECTION & DETAILS	2 of 2
68308	1200mm SQ MANHOLE COVER AND FRAME	1 of 1

Reinforcing Ref. Drawings

Geotech Ref. Drawings

Revision	Date	Description
0	OCT. 2021	FOR TENDER PURPOSES ONLY

NOTE:No construction work to commence until land and servitude acquisitions have been completed

Acquisitions completed:

Date Engineer NORTH POINT

UNDERGROUND SERVICES CHECKED –

SERVICE	DATE	SIGNATURE
S.W DRAINS		
SEWERS		
WATERMAINS		
TELKOM CABLES		
ELECTRIC CABLES		
S.A.R CABLES		
E.S.C CABLES		
OIL PIPE LINE		

NOTE: Only underground services affected by new construction are shown. Care must be taken during excavations for road foundations,trenches etc.to avoid damage to underground services such as sewers,drains,cables,watermains and connections.Wherever possible these must be located before work begins.

Contract No. WS 7400

Project No. D732

Planning Unit EWS

Project Title
THANDOKUHLE RESERVOIR COMPARTMENT 1
CONSTRUCTION OF A 3ML REINFORCED CONCRETE RESERVOIR, 150mm Ø STEEL INLET, 300mm Ø STEEL OUTLET PIPELINES AND ASSOCIATED WORKS

Drawing Title
OUTLET AND SCOUR STRUCTURE LAYOUT AND DETAILS

Scales :	As Shown
Original paper size :	A0
Designed : D. Ramghulam	Date : May 2021
Checked : A. Goorun	Drawn : N. Adams

Area Engineer (W.O.)

Manager (W.D.)

Director (Water)

E.Mseli – Head:Water & Sanitation Unit

Drawing No.	Sheet	Rev.
60356/007	1 of 1	0

INLET CHAMBER CO-ORDINATES (WGS 84, Lo 31)		
E	23 164.593	3 284 282.147
F	23 161.811	3 284 283.269
G	23 163.008	3 284 286.237
H	23 165.790	3 284 285.115
5	23 164.676	3 284 281.952
6	23 161.616	3 284 283.186
8	23 162.924	3 284 286.432
9	23 165.985	3 284 285.198

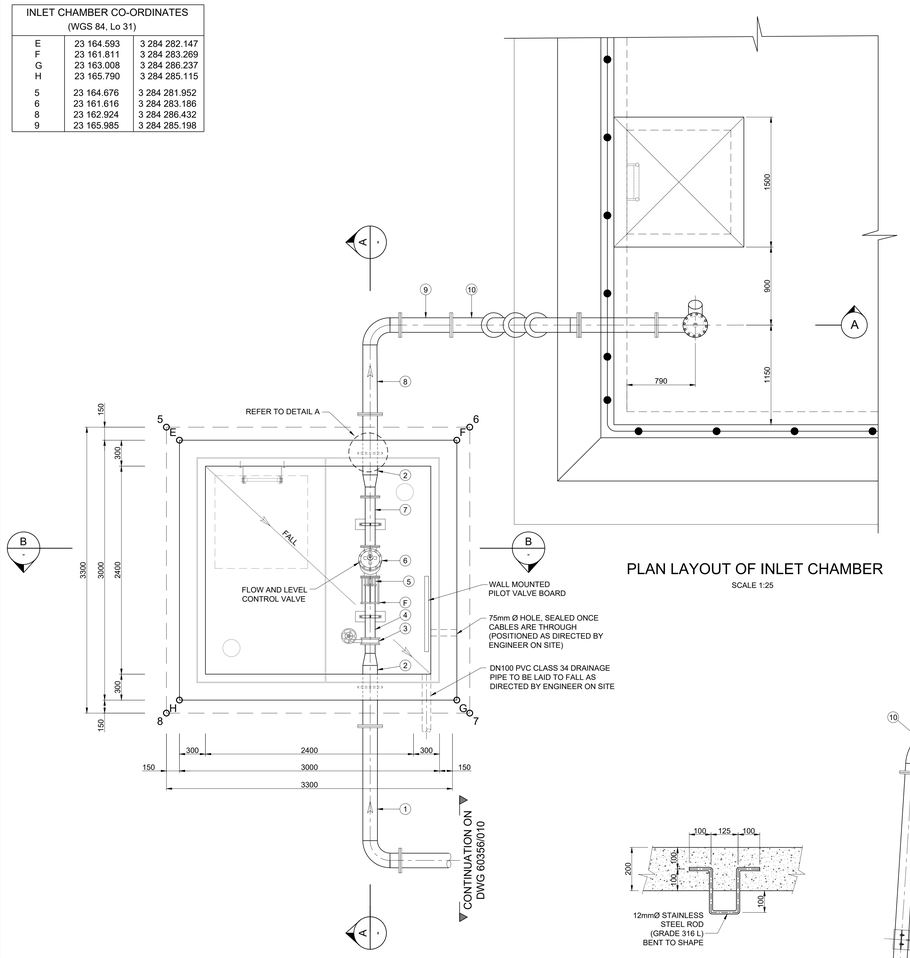

PLAN LAYOUT OF INLET CHAMBER

SCALE 1:25

ABBREVIATIONS :

DN - DIAMETER NOMINAL
OD - OUTSIDE DIAMETER
ID - INSIDE DIAMETER
M.S - MILD STEEL
S.S - STAINLESS STEEL
H.D.G.M.S - HOT DIPPED GALVANISED MILD STEEL
G.M.S - GALVANISED MILD STEEL
C.I - CAST IRON
F.R.L. - FINAL ROAD LEVEL
F.O.E - FLANGED ONE END
F.B.E - FLANGED BOTH ENDS
F.A.R - FLANGED ALL ROUND
L.R.B - LONG RADIUS BEND
S.R.B - SHORT RADIUS BEND
F/F - FACE TO FACE DIMENSION
C/F - CENTRE TO FACE DIMENSION
P.C. - PLAIN END COATED
P.E. - PLAIN END (FOR WELDING)
S.F.E. - SOLVENT FREE EPOXY

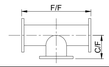

PIPEWORK AND FITTINGS SCHEDULE

ITEM NO	NOM DIA	DESCRIPTION	DIMENSIONS (mm) A	B	C	F/F	No. OF
1	DN150	90° SHORT RADIUS BEND (ANSI B16.9) WITH 100mm AND 1300mm SPOOL PIECE AS INDICATED, FBE				1545	1
2	DN100 x DN150	SPECIAL: FLANGED BOTH ENDS WITH PUDDLE FLANGE 425mm FROM UPSTREAM END, DN150 TO DN100 REDUCER, DN100 FLANGE TO MATCH ITEM 3 AND DN150 FLANGE TO MATCH ITEM 1.				955	2
3	DN100	WAFER BUTTERFLY VALVE, (E.P.D.M. LINED) TYPE 'ISORIA' BY AMRI OR SIMILAR APPROVED, COMPLETE WITH MATCHING FLANGES, NUTS, BOLTS, WASHERS AND GASKETS.				54	1
4	DN100	PIPE, FLANGED ONE END AND OTHER END PLAIN ENDED FITTED WITH RESTRAINING FLANGE TO SUIT. (FINAL LENGTH CONFIRMED ON SITE)				720	1
5	DN100	RESTRAINED FLANGE ADAPTOR (KAMFLEX, VIKING JOHNSON) OR SIMILAR APPROVED TO SUIT STEEL SPOOL PIPE. FLANGE TO MATCH ITEM 6. NOTE 'F': ANCHORING OR RESTRAINING FLANGE TO BE WELDED APPROXIMATELY 300mm FROM PLAIN END OF ITEM 4. RESTRAINING FLANGE ADAPTOR TO USE MINIMUM OF 4 NUMBER GRADE 4.8 RESTRAINING BOLTS, EQUALLY SPACED AROUND CIRCUMFERENCE OF FLANGES. RESTRAINING FLANGE TO BE TABLE 2500/3 (SANS 1123 - 2011).				-	1
6	DN100	BERMAD LEVEL CONTROL VALVE				350	1
7	DN100	SPOOL PIECE, FLANGED BOTH ENDS. ONE FLANGE TO MATCH ITEM 6. FINAL LENGTH CONFIRMED ON SITE				575	1
8	DN150	90° SHORT RADIUS BEND (ANSI B16.9) WITH 100mm AND 780mm SPOOL PIECE AS INDICATED, FBE				1030	1
9	DN150	SPOOL PIECE, FLANGED BOTH ENDS. FINAL LENGTH TO BE DETERMINED ON SITE.				590	1
10	DN150	MODIFIED 90° LONG RADIUS BEND TO SUIT ANGLE OF 86°, WITH 100mm SPOOL PIECE EACH END, F.B.E.					2
11	DN150	STRAIGHT PIPE, F.B.E. FINAL LENGTH TO BE DETERMINED ON SITE.				3910	2
12	DN150	INSULATING FLANGE.					1
13	DN150	SPOOL PIECE, FLANGED BOTH ENDS, FINAL LENGTH TO BE DETERMINED ON SITE.				885	1
14	DN150	BLANK FLANGED WITH 50mm Ø HOLE CORED CENTRALLY (SEE AIR VALVE DETAIL)					1
15	DN150	EQUAL TEE WITH DN200 SPOOL PIECE ON EACH END AND FLANGED ALL ROUND					1
16	DN150	SPOOL PIECE, FLANGED BOTH ENDS WITH PUDDLE FLANGE 680mm FROM UPSTREAM END.				1100	1
17	DN150	45° SHORT RADIUS BEND (ANSI B16.9) WITH 1300mm SPOOL PIECE AT ONE END FLANGE AND OTHER END PLAIN ENDED					1
18	DN300 x DN50	SPECIAL: DN300 x DN150 REDUCING TEE OFF TAKE FOR FUTURE INLET BLANK FLANGED AS INDICATED			520	757	1

NOTES:
ALL SPECIALS TO BE EPOXY COATED (S.F.E) TO PROJECT SPECIFICATIONS UNLESS OTHERWISE STATED. ALL PIPE TO BE TO SANS 719, GRADE X42, 4.5mm THICK.
ALL FLANGES TO BE TO TABLE 1600/3 (SANS 1123 - 2011).
IF FACE TO FACE DIMENSION OF FITTINGS DIFFER TO ACTUAL THE CONTRACTOR MUST INFORM THE ENGINEER PRIOR TO PIPE FABRICATION.

GENERAL NOTES

PIPEWORK

1. ALL PIPEWORK TO BE MILD STEEL UNLESS OTHERWISE STATED.
2. THE CONTRACTOR SHALL VERIFY THE DIMENSIONS OF ALL PIPEWORK AND ADVISE THE ENGINEER OF ANY DISCREPANCIES PRIOR TO FABRICATION.
3. ALL PIPES GREATER THAN AND INCLUDING DN100, FITTED TO EQUIPMENT OR FITTINGS, OR WHERE SPECIFICALLY INDICATED SHALL BE FLANGED TO SANS 1123:2007 (TABLE 3) OR BS EN 1092 : 1-2007 WHERE SANS 1123:2007 (TABLE 3) DOES NOT APPLY OR AS SPECIFIED ON THE DRAWINGS. SHOULD THE RESPECTIVE FLANGE DRILLING NOT BE COVERED IN THE ABOVE SPECIFICATIONS THE RESIDENT ENGINEER SHALL BE CONSULTED FOR THE APPROPRIATE SPECIFICATION, BEFORE PROCURING ANY VALVES OR FLANGES.
4. SURFACE PREPARATION FOR APPLICATION OF CORROSION PROTECTION MATERIALS SHALL BE IN ACCORDANCE WITH THE PROJECT SPECIFICATIONS.
5. DAMAGED COATINGS AND LININGS SHALL BE REPAIRED IN ACCORDANCE WITH THE PROJECT SPECIFICATIONS.
6. ALL PIPEWORK AND SPECIALS TO BE COATED AND LINED AS PER THE PROJECT SPECIFICATIONS.
7. ALL JOINTS SHALL BE COATED, PROTECTED AND WRAPPED AS PER THE PROJECT SPECIFICATIONS.
8. THE PRESSURE RATINGS OF ALL PIPEWORK, FLANGES AND VALVES, SHALL BE AS INDICATED IN THE SCHEDULES OF FITTINGS.
9. ALL MILD STEEL PIPEWORK, COLLARS, WRAPPERS AND CROTCH PLATES TO BE MANUFACTURED FROM MINIMUM GRADE X42 STEEL AND WELDED IN ACCORDANCE WITH THE PROJECT SPECIFICATIONS.
   WHERE THE GRADE OF STEEL FOR THE MAIN PIPE IS X52 OR X65, COLLARS AND WRAPPERS SHALL BE FABRICATED FROM STEEL PIPE OF THE SAME GRADE AS THE MAIN PIPE UNLESS OTHERWISE STATED ON THE DRAWINGS.
10. ALL BENDS TO BE FABRICATED AND DIMENSIONED IN ACCORDANCE WITH THE PROJECT SPECIFICATIONS.
11. BACKFILL MATERIAL TO BE COMPACTED TO 95% MOD. AASHTO IN MAX. 150mm LAYERS & 97% MOD AASHTO IN 150mm LAYERS WHERE THE PIPE IS LOCATED UNDER A PAVED ROAD SURFACE.
12. FOR ALL COLLAR PLATES, PRE-DRILL 2 x 5mmØ HOLE. UPON COMPLETION OF FILLET WELDING, WELD HOLES CLOSED.

CONCRETE

1. ALL EXPOSED EDGES TO BE CHAMFERED 25x25.
2. MINIMUM COVER TO ALL REINFORCING SHALL BE 50mm.
3. NO REINFORCEMENT SHALL BE FIXED CLOSER THAN 200mm TO THE STEEL PIPE.
4. CONSTRUCTION JOINTS TO BE WELL CLEANED & SCABBLED TO EXPOSE FRESH AGGREGATE AND THOROUGHLY WETTED BEFORE THE NEXT LIFT IS POURED.
5. FINISHES
   - EXTERNAL WALLS UNEXPOSED : F1 FINISH
   - EXTERNAL WALLS EXPOSED : F1 FINISH
   - INTERNAL WALLS : F2 FINISH
   - FLOOR : U4 FINISH
6. & WHERE APPLICABLE, AIR VENTS, LIFTING HOLES, LIFTING HOOKS, STEP IRONS AND DI COVER FRAME ARE TO BE PRE- INSTALLED AT THE MANUFACTURER PRIOR TO DELIVERY ON SITE.

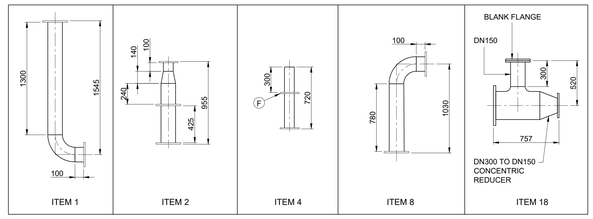

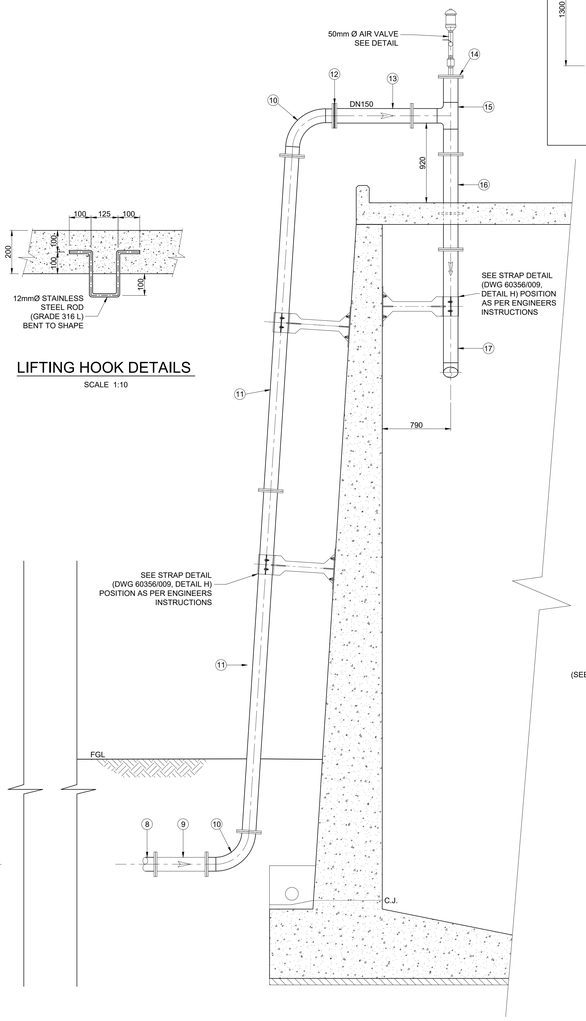

LIFTING HOOK DETAILS

SCALE 1:10

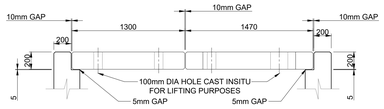

SECTION D

SCALE 1:25

SECTION C

SCALE 1:25

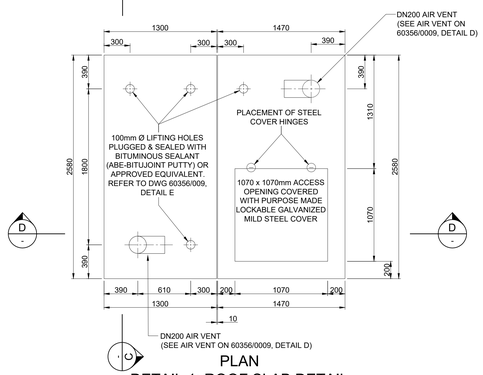

PLAN
DETAIL 1: ROOF SLAB DETAIL

SCALE 1:25

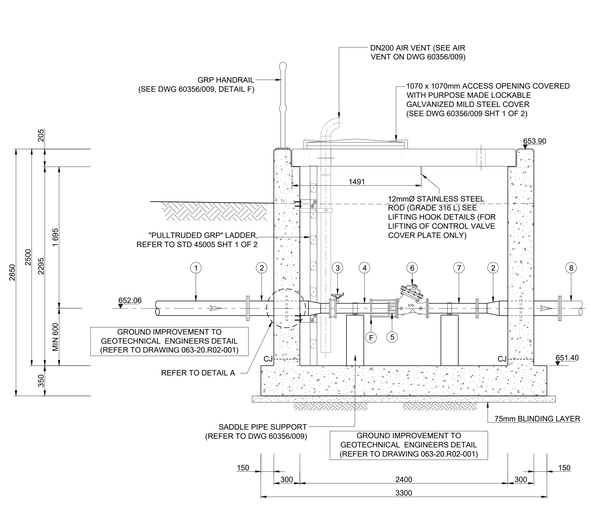

SECTION A

SCALE 1:25

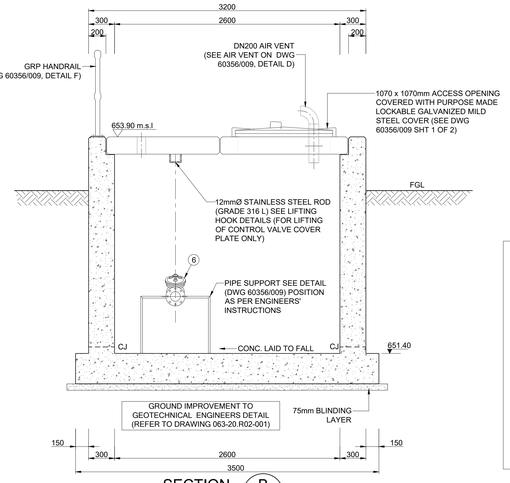

SECTION B

SCALE 1:25

50mm Ø AIR VALVE ASSEMBLY DETAIL

N.T.S

AIR VALVE ASSEMBLY SCHEDULE

ITEM NO	NOM DIA	DESCRIPTION	F/F	No. OF
A	DN50	DOUBLE PURPOSE BERMAD OR SIMILAR APPROVED, AIR RELEASE VALVE (MODEL No.4415) (CLASS10/16)		1
B	DN50	M.S SPOOL PIECE.	250	1
C	DN50	BALL-O-STOP (CLASS 10/16)		1
D	DN50	GAS SOCKET WELDED TO FLANGE		1

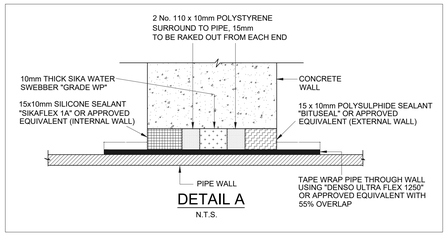

DETAIL A

N.T.S.

eTHEKWINI WATER SERVICES

WATER DESIGN BRANCH

eTHEKWINI

REDUCED PLAN USE SCALE BELOW

0 10 20 30 40 50 60 70

70mm ON ORIGINAL PLAN

CONSULTANT:

NAIDU CONSULTING

1st Floor
No.5 The Boulevard
West Way Office Park
Westville, Durban

Tel : +27 (0) 31 265 6007
Fax : +27 (0) 31 265 6011
E-mail : info@naiduconsulting.com

DRAWING No.: D732-52-5254

FOR TENDER

Ref Drg.	Description	
60356/002	RESERVOIR SITE PLAN LAYOUT	1 of 1
60356/006	RESERVOIR ROOF PLAN AND DETAILS	1 of 1
60356/009	STANDARD ASSOCIATED DETAILS	1 of 2
60356/009	STANDARD ASSOCIATED DETAILS	2 of 2
60356/010	INLET AND OUTLET PIPELINE PLAN AND LONG SECTIONS	1 of 1

Standard Drawings

45001	THRUST BLOCK	1 of 1
45002	TYPICAL TRENCH DETAILS	1 of 1
45005	GRP ACCESS LADDER: PLAN, SECTION & DETAILS	1 of 2
45005	GRP ACCESS LADDER: PLAN, SECTION & DETAILS	2 of 2

Reinforcing Ref. Drawings

Geotech Ref. Drawings

063-20.R02-001	Detail of Ground Improvement for Proposed Reservoir

Revision	Date	Description
0	MAY 2021	FOR TENDER PURPOSES ONLY

NOTE: No construction work to commence until land and servitude acquisitions have been completed.

Acquisitions completed:

Date Engineer NORTH POINT

UNDERGROUND SERVICES		CHECKED
SERVICE	DATE	SIGNATURE
S.W DRAINS		
SEWERS		
WATERMAINS		
G.P.O CABLES		
ELECTRIC CABLES		
S.A.R CABLES		
E.S.C CABLES		
OIL PIPE LINE		

NOTE: Only underground services affected by new construction are shown. Care must be taken during excavations for road foundations,trenches etc.to avoid damage to underground services such as sewers,drains,cables, watermains and connections.Wherever possible these must be located before work begins.

Contract No. WS 7400

Project No. D732

Planning Unit EWS

Project Title

THANDOKUHLE RESERVOIR COMPARTMENT 1

CONSTRUCTION OF A 3ML REINFORCED CONCRETE RESERVOIR, 150mm Ø STEEL INLET, 300mm Ø STEEL OUTLET PIPELINES AND ASSOCIATED WORKS

Drawing Title

DN150 INLET CHAMBER AND DETAILS

Scales :	As Shown
Original paper size :	A0
Designed : D. Ramghulam	Date : May 2021
Checked : A. Goorun	Drawn : N. Adams

Area Engineer (W.O.)

Manager (W.D.)

Director (Water)

E.Msweli - Head:Water & Sanitation Unit

Drawing No.	Sheet	Rev.
60356/008	1 of 1	0

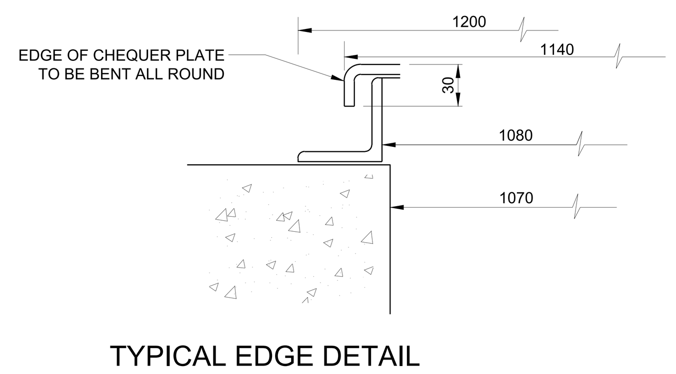

TYPICAL EDGE DETAIL
NTS

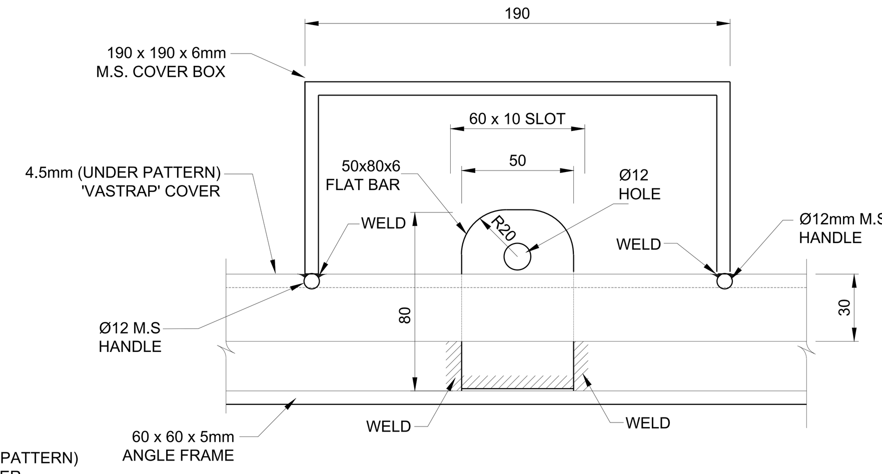

SECTION C-C

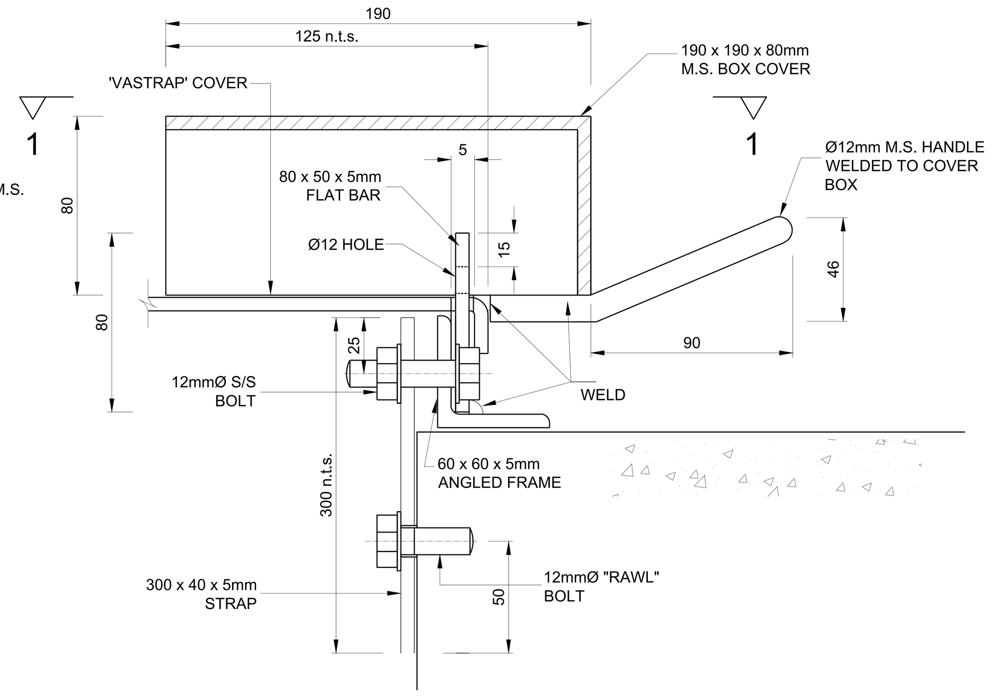

SECTION B-B

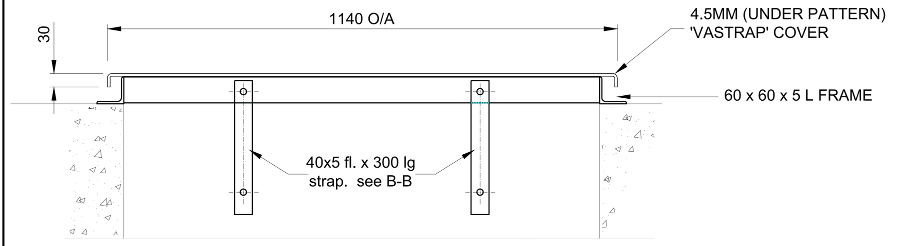

SECTION A-A
1:20

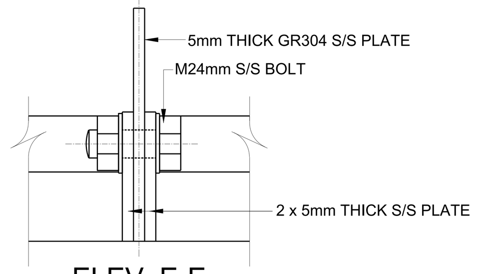

ELEV. E-E

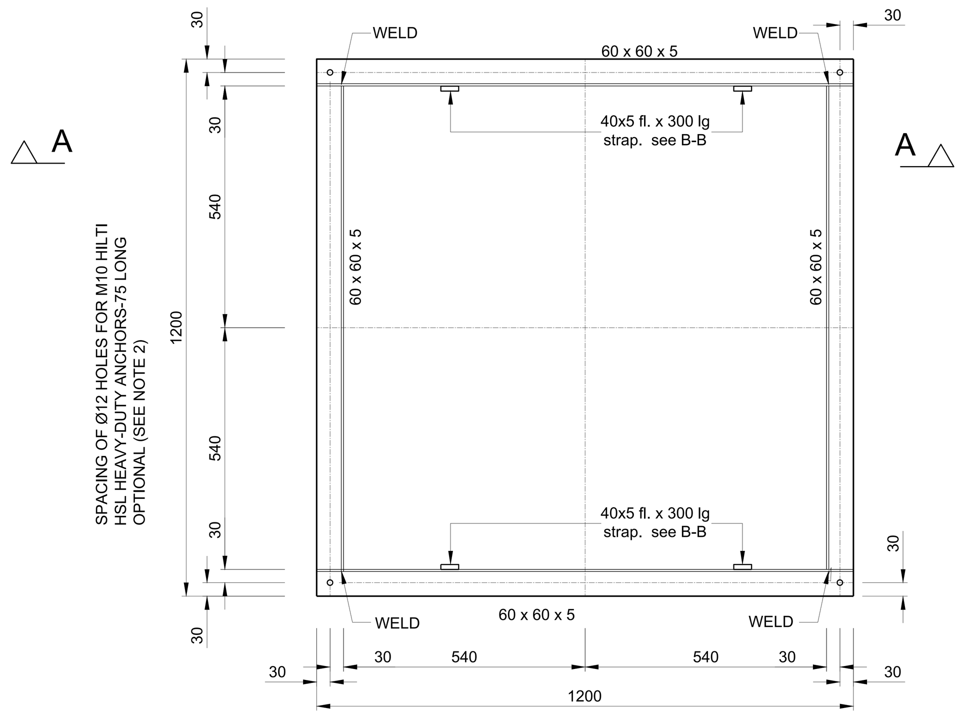

SPACING OF Ø12 HOLES FOR M10 GALV. HILTI HSL FOR HEAVY-DUTY ANCHORS-75 LONG OPTIONAL (SEE NOTE 2)

PLAN ON FRAME
1:20

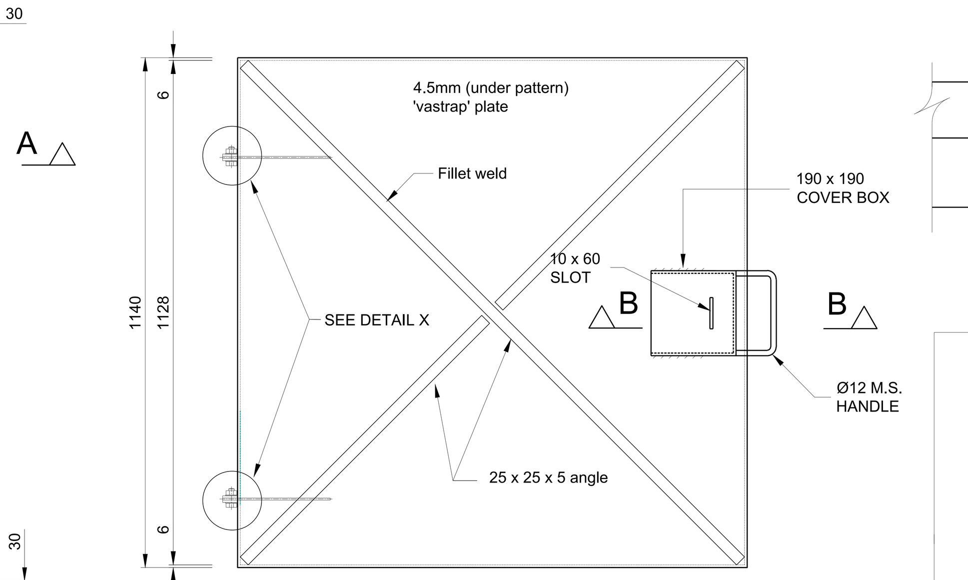

PLAN ON COVER
1:20

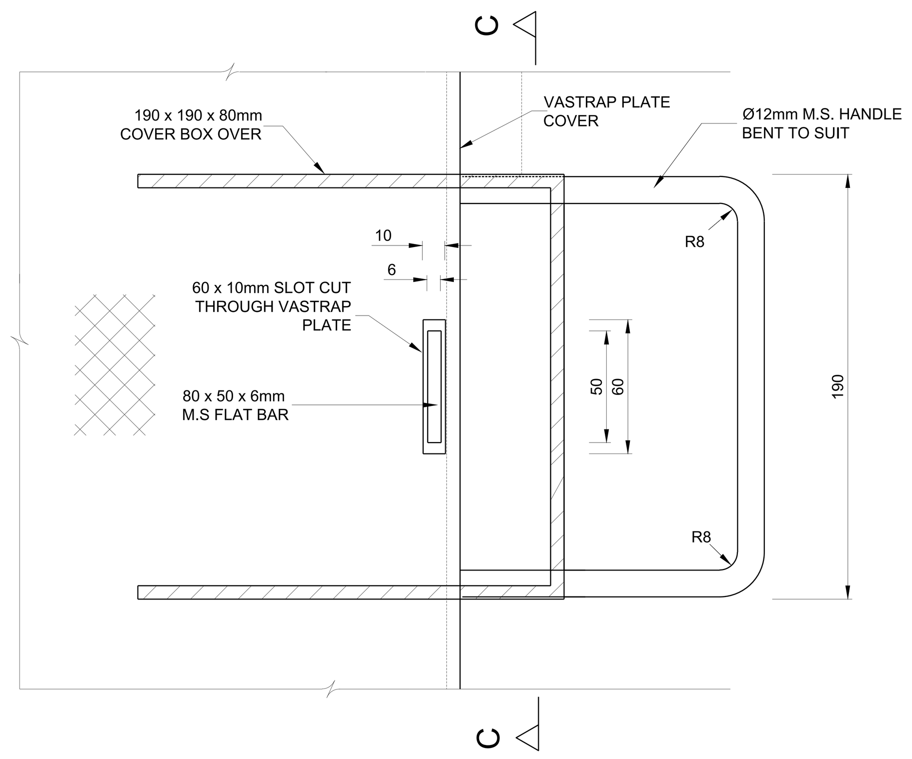

SECTIONAL PLAN 1-1

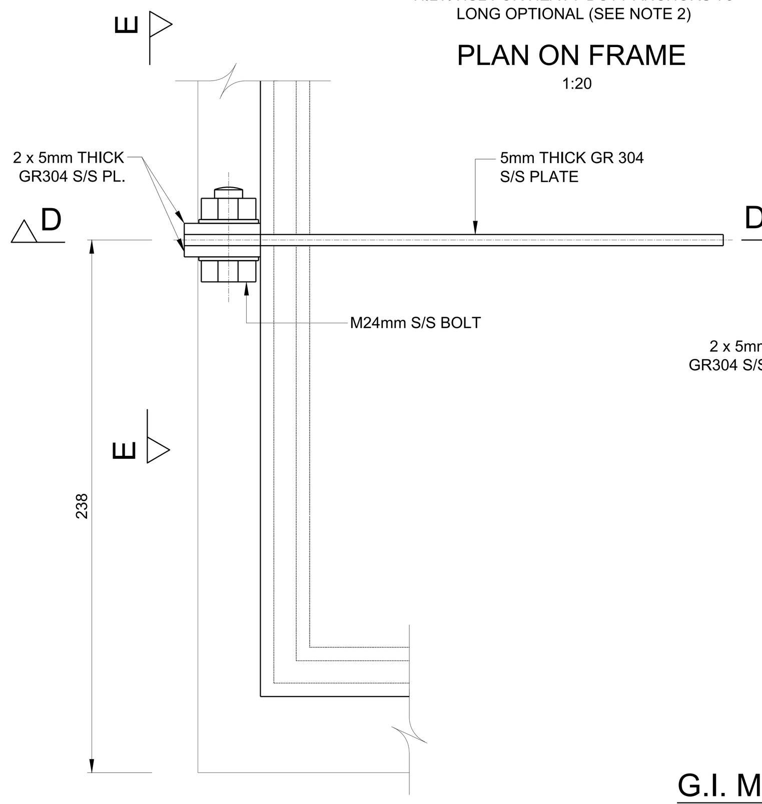

DETAIL X

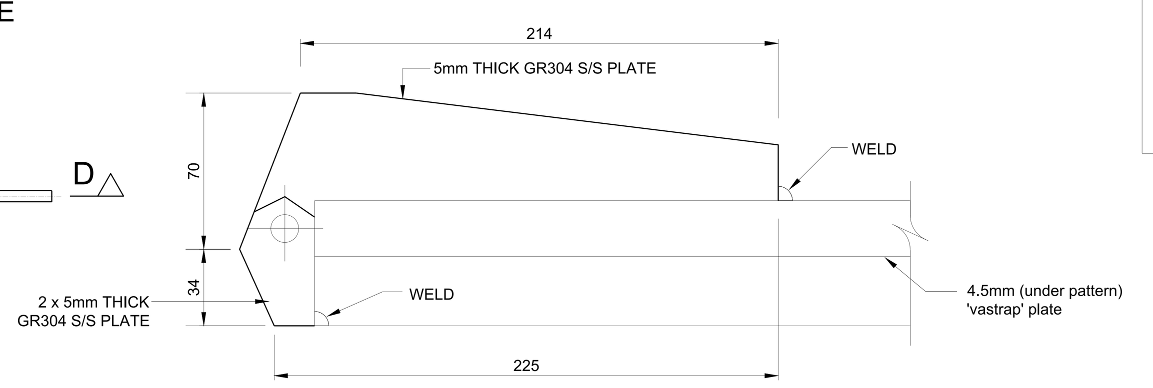

SECTION D - D

NOTES:
1. FRAME AND COVER TO BE HOT DIPPED GALVANISED TO SABS 763 AFTER FABRICATION AND THEN ASSEMBLED.
2. FISHTAIL LUGS OR BOLTS ARE OPTIONAL: WHERE FRAMES ARE TO BE FIXED TO EXISTING OR PRECAST UNITS, BOLTS MAY BE USED.
3. WHERE FRAMES ARE TO BE FIXED TO EXISTING OR ARE FIXED INTO IN-SITU CONCRETE, LUGS MAY BE PROVIDED.

DETAIL A
G.I. MANHOLE COVER AND FRAME ARRANGEMENT & DETAILS FOR 1070 x 1070mm OPENING

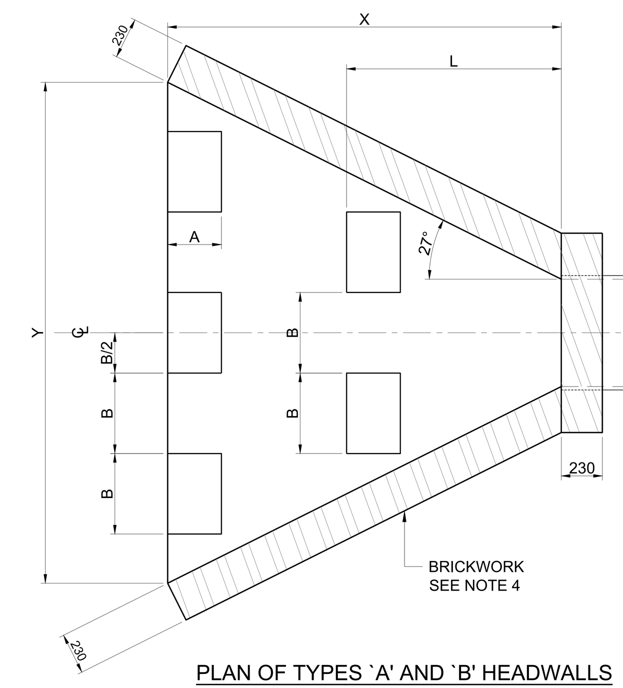

PLAN OF TYPES `A' AND `B' HEADWALLS
SCALE 1:25

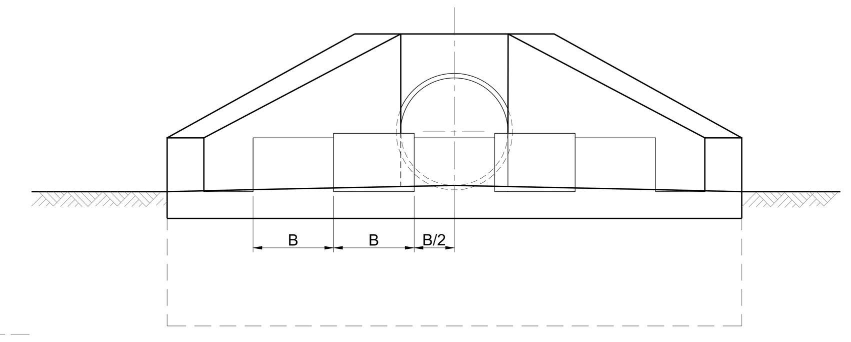

TYPE `A' HEADWALL - ELEVATION
N.T.S.

NOTES :
1) CONCRETE GRADE 20/26 MPa.
2) COVER TO STEEL 40mm MIN.
3) REINFORCING TO BE CUT AND BENT ON SITE. MIN. LAPS 500mm.
4) HEADWALL BRICKWORK SIZES (in mm):

WALL HEIGHT	BRICKWORK
0-1100	230
1100-1400	345
1400-1800	460

5) ALL EXPOSED BRICKWORK TO BE FACEBRICK.

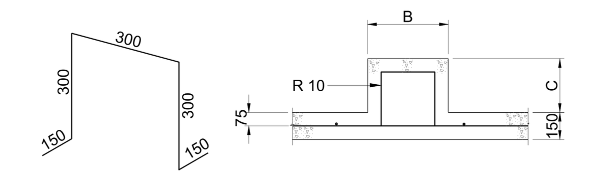

BLOCK REINFORCING (R 10) SECTION THROUGH BLOCK

SPLITTER BLOCK DETAILS
SCALE 1:25

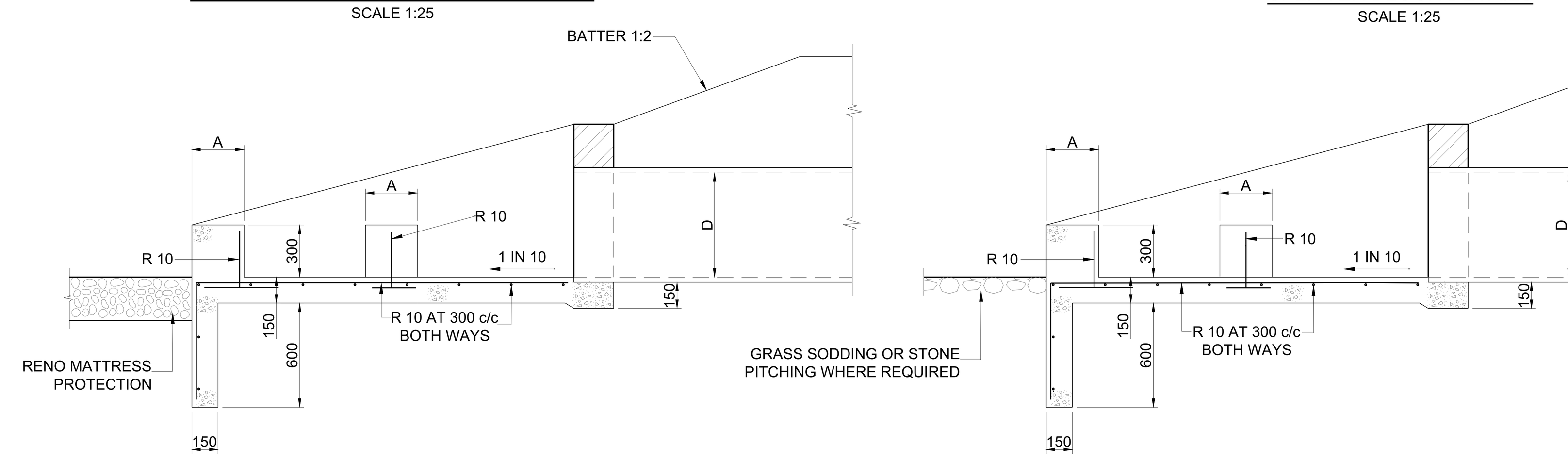

TYPE `A' HEADWALL WHERE PIPE GRADE IS LESS THAN 20% (1:5)
SCALE 1:25

INLET HEADWALL
SCALE 1:25

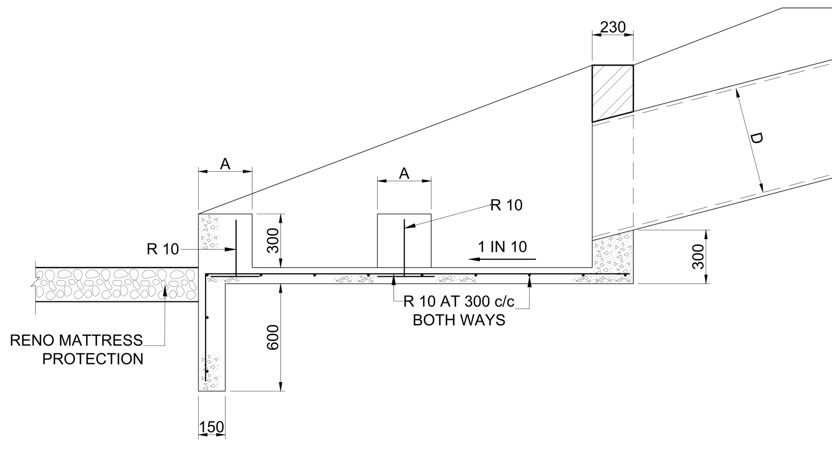

TYPE `B' HEADWALL WHERE PIPE GRADE IS GREATER THAN 20% (1:5)
SCALE 1:25

NOM. PIPE DIA.	DIMENSIONS (mm)					
D	A	B	C	L	X	Y
375	245	350	250	980	1800	2175
450	245	360	250	980	1800	2250
525	250	375	250	1050	2000	2525
600	300	450	300	1200	2200	2800
750	300	450	300	1500	2400	3150
825	300	450	300	1650	2600	3425
900	300	450	300	1800	2800	3700
1050	300	450	300	2100	3000	4050
1200	300	450	300	2400	3200	4400

NOTE : INLET HEADWALL DOES NOT HAVE SPLITTER BLOCKS.

HEADWALL DETAIL 1

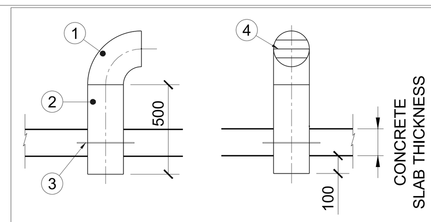

NOTE: AIR VENT TO BE HEAVY DUTY HOT DIPPED GALVANIZED TO SABS 763

ITEM	DESCRIPTION	QTY
1	DN100/200 x 90° SHORT RADIUS BEND (ANSI B16.28)	1
2	DN100/200 x 4.5mm THK GMS PIPE, MIN 500mm LONG	1
3	DN100/200 x 4.5mm THK GMS PUDDLE FLANGE	1
4	3 No. 10mmØ BARS WELDED ACROSS OPENING AT EQUAL CENTERS	1

AIR VENT DETAIL D
SCALE 1 : 25

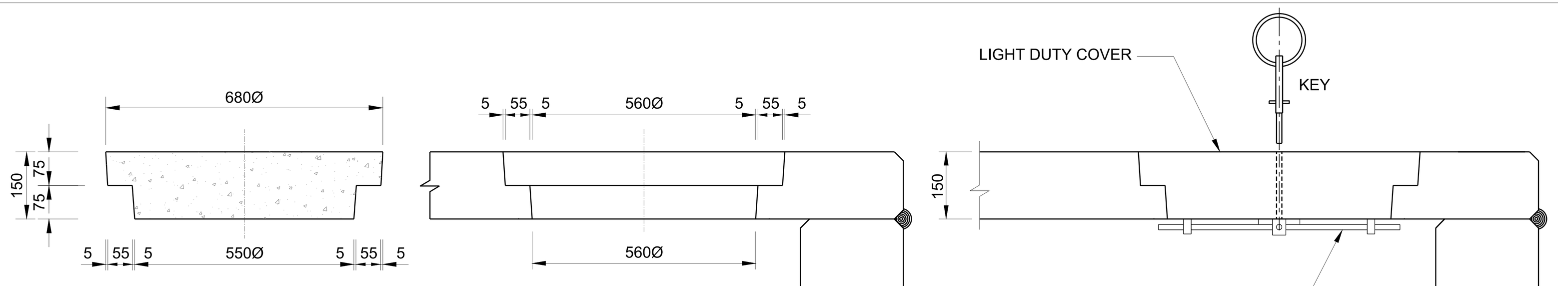

SECTION OF CIRCULAR LIGHT DUTY MANHOLE COVER

SECTION OF CIRCULAR LIGHT DUTY MANHOLE FRAME IN ROOF SLAB

SECTION OF CIRCULAR LIGHT DUTY MANHOLE COVER & ROOF SLAB

DETAIL OF LOCKABLE CONCRETE MANHOLE COVER
DETAIL B
SCALE 1:10

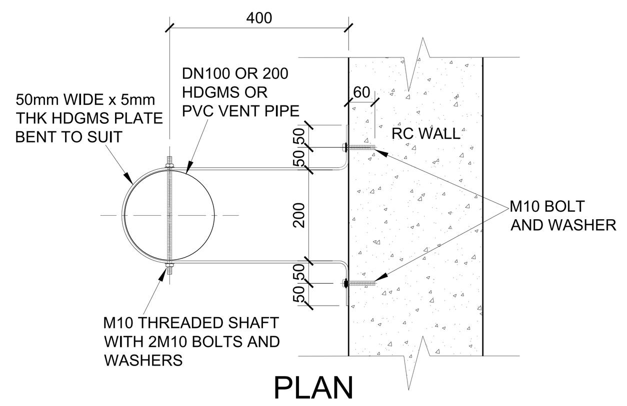

PLAN
MOUNTING BRACKET FOR AIR VENT
SCALE 1:10

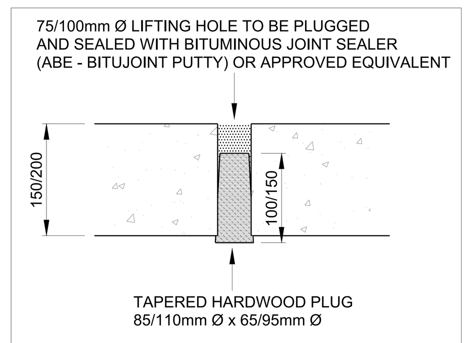

DETAIL E
N.T.S

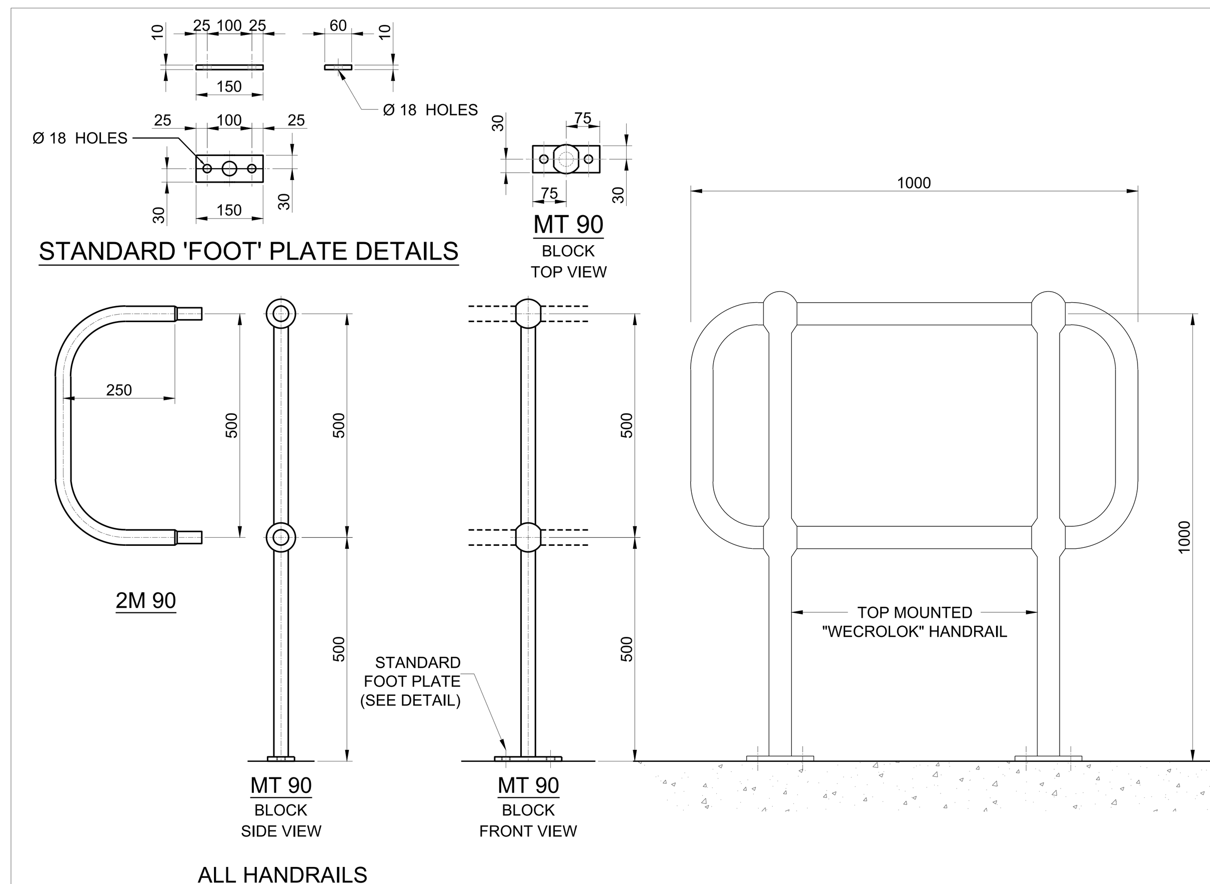

ALL HANDRAILS
Ø 65 BALL, Ø 32 CROSS & DOWN PIPES

DETAIL F: GRP HANDRAILS
SCALE 1:20

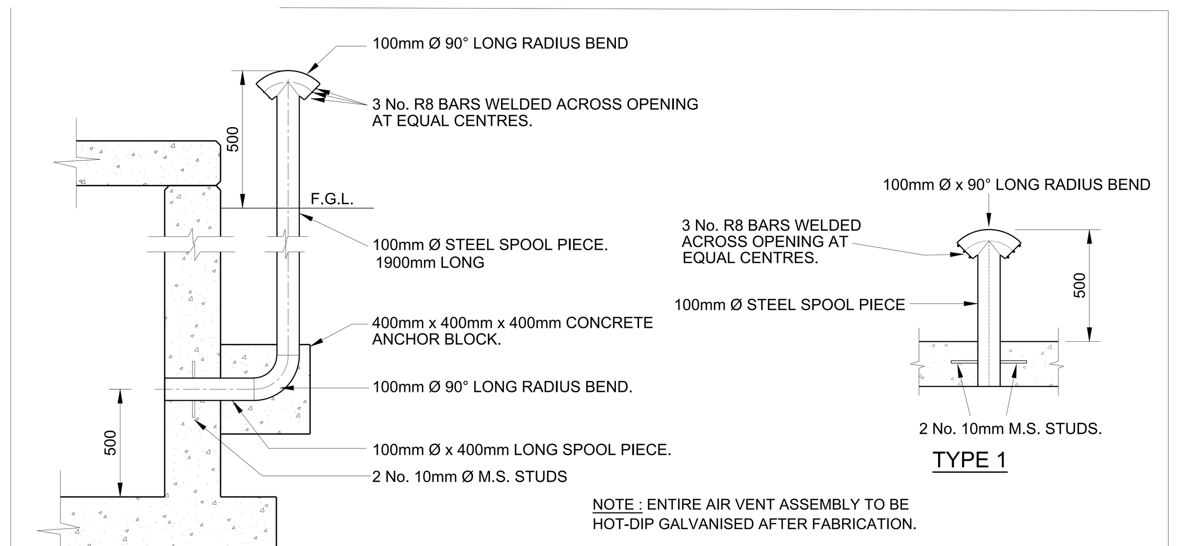

TYPE 1

TYPE 2

NOTE : ENTIRE AIR VENT ASSEMBLY TO BE HOT-DIP GALVANISED AFTER FABRICATION.

AIR VENT DETAIL
DETAIL C
SCALE 1:20

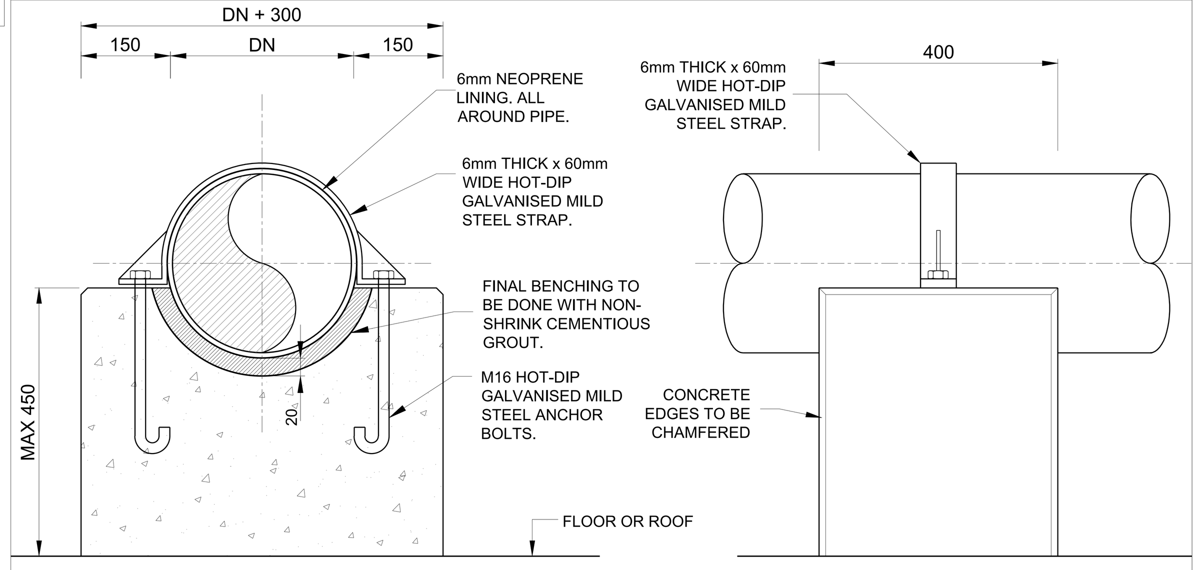

TYPICAL SECTION ACROSS PIPE

ELEVATION

DETAIL G: PIPE SUPPORT TYPE 1
FOR TOP OF RESERVOIR ROOF
SCALE 1:10

NOTE:
PIPE STRAP WITH FITTINGS INSIDE OF RESERVOIR TO BE 316 STAINLESS STEEL.

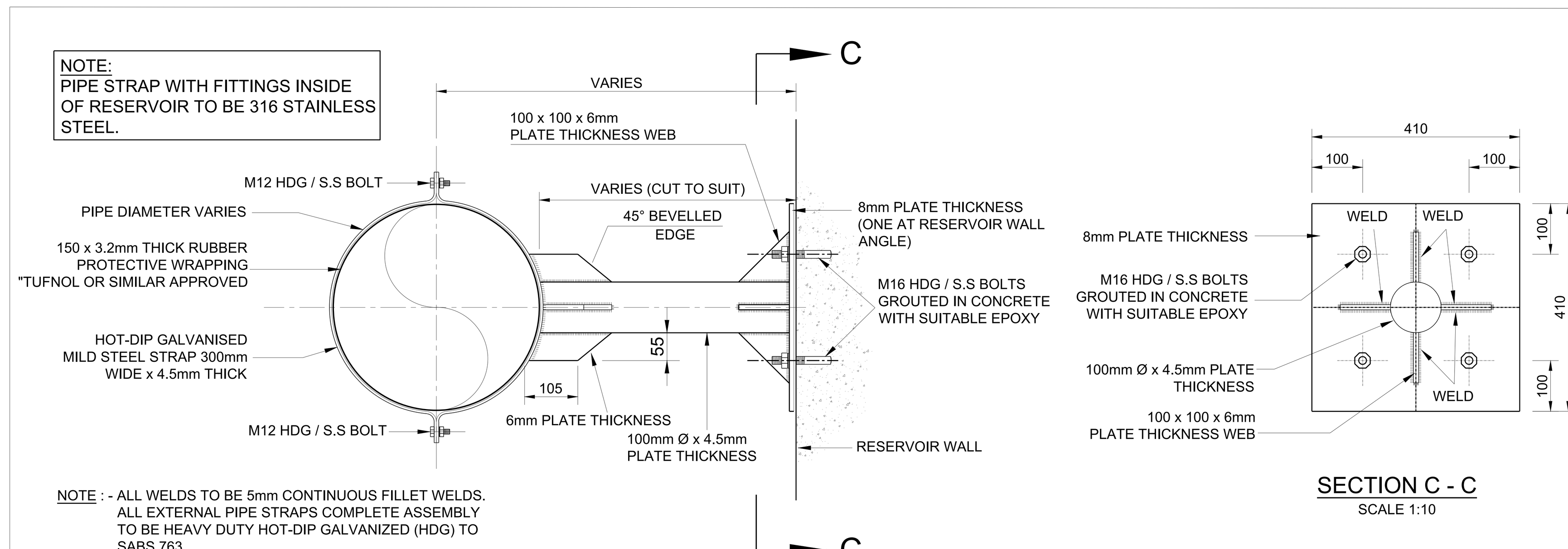

NOTE : - ALL WELDS TO BE 5mm CONTINUOUS FILLET WELDS. ALL EXTERNAL PIPE STRAPS COMPLETE ASSEMBLY TO BE HEAVY DUTY HOT-DIP GALVANIZED (HDG) TO SABS 763.

PLAN VIEW OF INLET PIPE STRAP & PIPE SUPPORT DETAIL - UP TO DN400
SCALE 1:10

SECTION C - C
SCALE 1:10

DETAIL H: PIPE SUPPORT TYPE 2

eTHEKWINI WATER SERVICES
WATER DESIGN BRANCH
eTHEKWINI

REDUCED PLAN USE SCALE BELOW
0 10 20 30 40 50 60 70
70mm ON ORIGINAL PLAN

CONSULTANT:
NAIDU CONSULTING

1st Floor
No.5 The Boulevard
West Way Office Park
Westville, Durban
Tel : +27 (0) 31 265 6007
Fax : +27 (0) 31 265 6011
E-mail : info@naiduconsulting.com

DRAWING No.: D732-52-5400

FOR TENDER

Ref Drg.	Description	
60356/002	RESERVOIR SITE PLAN LAYOUT	1 of 1
60356/003	TYPICAL EARTHWORK CROSS SECTIONS	1 of 1
60356/004	RESERVOIR FLOOR PLAN	1 of 1
60356/005	RESERVOIR SECTION AND DETAILS	1 of 1
60356/006	RESERVOIR ROOF PLAN AND DETAILS	1 of 1
60356/007	DN300 OUTLET CHAMBER AND SCOUR DETAILS	1 of 1
60356/008	DN150 INLET CHAMBER AND DETAILS	1 of 1
60356/010	INLET AND OUTLET PIPELINE PLAN AND LONG SECTIONS	1 of 1
60356/011	DN200 IN-LINE INLET METER	1 of 1
60356/012	DN100 IN-LINE OUTLET METER	1 of 1
60356/013	TYPICAL AIR VALVE CHAMBER	1 of 1
60356/014	TYPICAL SCOUR VALVE CHAMBER	1 of 1
60356/015	DN150 CROSS CONNECTION CHAMBER	1 of 1
60356/016	STORMWATER PLAN AND LONGSECTIONS	1 of 1
60356/017	ROAD PLAN AND SECTIONS	1 of 1
60356/018	ACCESS ROAD LONG SECTION AND CROSS SECTION	1 of 1
60356/019	TELEMETRY ROOM	1 of 1

Standard Drawings

Reinforcing Ref. Drawings

Geotech Ref. Drawings

Revision	Date	Description
0	OCT. 2021	FOR TENDER PURPOSES ONLY

NOTE: No construction work to commence until land and servitude acquisitions have been completed

Acquisitions completed:

Date Engineer

NORTH POINT

UNDERGROUND SERVICES CHECKED -

SERVICE	DATE	SIGNATURE
S.W DRAINS		
SEWERS		
WATERMAINS		
TELKOM CABLES		
ELECTRIC CABLES		
S.A.R CABLES		
E.S.C CABLES		
OIL PIPE LINE		

NOTE: Only underground services affected by new construction are shown. Care must be taken during excavations for road foundations,trenches etc.,to avoid damage to underground services such as sewers,drains,cables,watermains and connections. Wherever possible these must be located before work begins.

Contract No. WS 7400

Project No. D732

Planning Unit EWS

Project Title
THANDOKUHLE RESERVOIR COMPARTMENT 1
CONSTRUCTION OF A 3ML REINFORCED CONCRETE RESERVOIR, 150mm Ø STEEL INLET, 300mm Ø STEEL OUTLET PIPELINES AND ASSOCIATED WORKS

Drawing Title
STANDARD ASSOCIATED DETAILS

Scales : As Shown
Original paper size : A0
Designed : D. Ramghulam | Date : May 2021
Checked : A. Goorun | Drawn : N. Adams

Area Engineer (W.O.)

Manager (W.D.)

Director (Water)

E.Msweli - Head: Water & Sanitation Unit

Drawing No. 60356/009 | Sheet 1 of 2 | Rev. 0

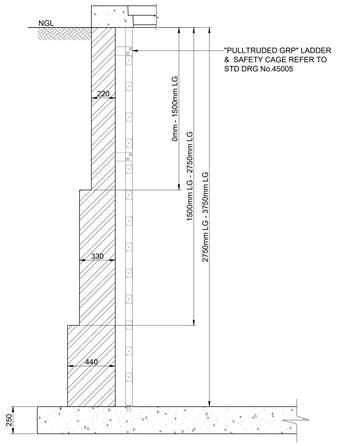

DETAIL J

STANDARD DETAIL ON VARYING BRICK THICKNESS FOR DIFFERENT DEPTHS

SCALE 1 : 20

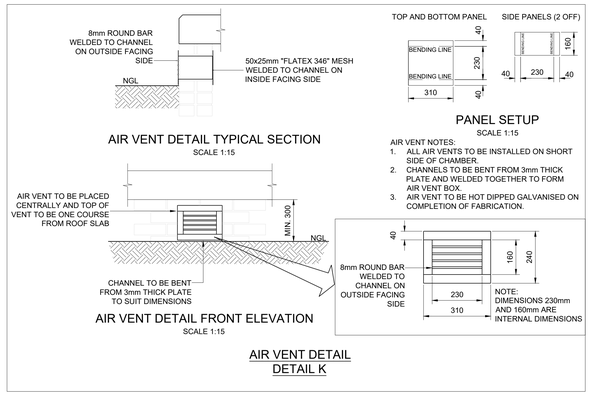

AIR VENT DETAIL
DETAIL K

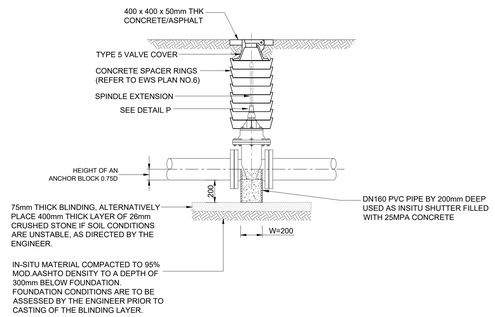

DETAIL M

TYPICAL VALVE AND SPACER RING DETAILS

SCALE 1:20

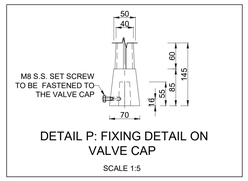

DETAIL P: FIXING DETAIL ON VALVE CAP

SCALE 1:5

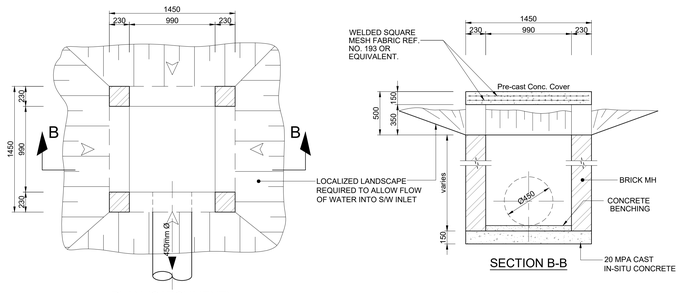

PLAN (CATCHMENT)
(DRAWN WITHOUT LID FOR CLARITY)

SECTION B-B

DETAIL N

DEPRESSED INLET DETAIL

SCALE 1 : 25

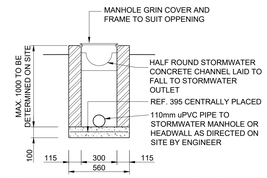

DETAIL O: BRICKWORK CATCH PIT DETAILS

SCALE 1:20

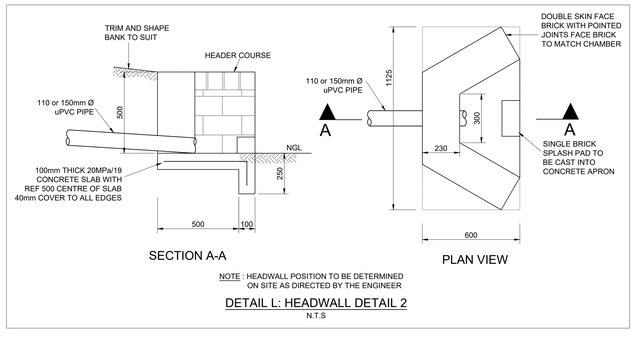

NOTE : HEADWALL POSITION TO BE DETERMINED ON SITE AS DIRECTED BY THE ENGINEER

DETAIL L: HEADWALL DETAIL 2

N.T.S

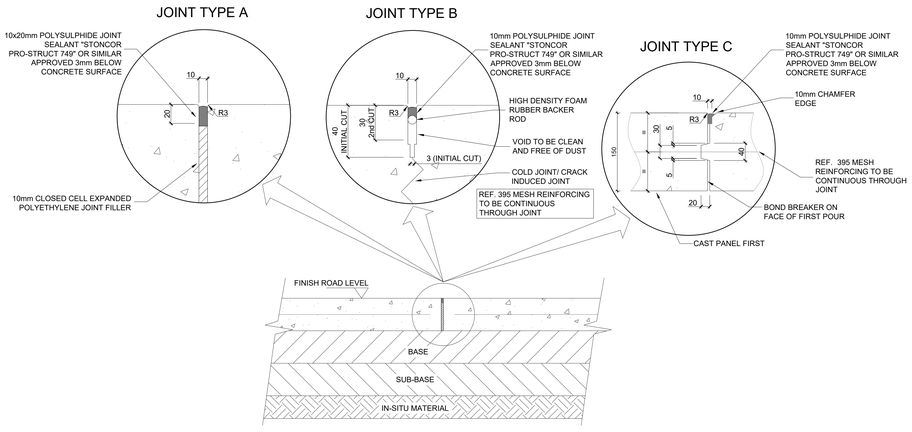

CONCRETE SURFACE JOINT DETAILS

SCALE 1:10

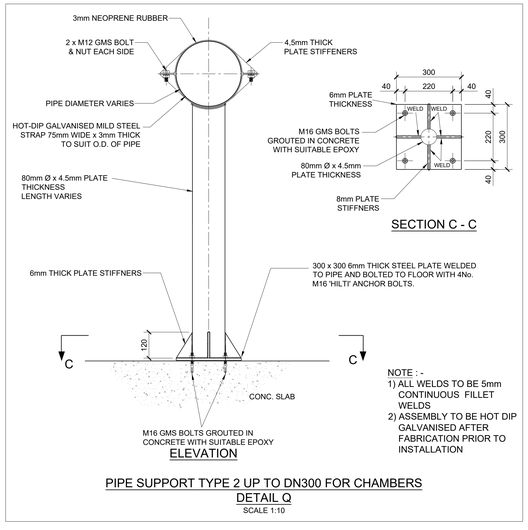

NOTE : -
1) ALL WELDS TO BE 5mm CONTINUOUS FILLET WELDS
2) ASSEMBLY TO BE HOT DIP GALVANISED AFTER FABRICATION PRIOR TO INSTALLATION

PIPE SUPPORT TYPE 2 UP TO DN300 FOR CHAMBERS
DETAIL Q

SCALE 1:10

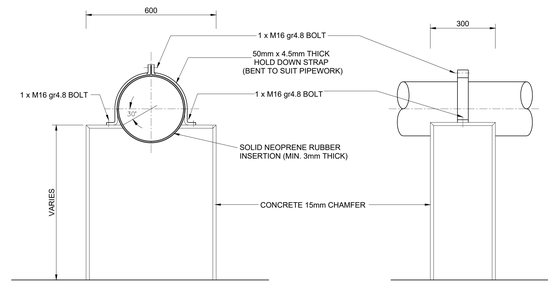

SADDLE PIPE SUPPORT DETAIL

DETAIL 4

eTHEKWINI WATER SERVICES

WATER DESIGN BRANCH

eTHEKWINI

REDUCED PLAN USE SCALE BELOW

0 10 20 30 40 50 60 70

70mm ON ORIGINAL PLAN

CONSULTANT:

NAIDU CONSULTING

1st Floor
No.5 The Boulevard
West Way Office Park
Westville, Durban

Tel : +27 (0) 31 265 6007
Fax : +27 (0) 31 265 6011
E-mail : info@naiduconsulting.com

DRAWING No.: D732-52-5400

FOR TENDER

Ref Drg.	Description	
60356/002	RESERVOIR SITE PLAN LAYOUT	1 of 1
60356/003	TYPICAL EARTHWORK CROSS SECTIONS	1 of 1
60356/004	RESERVOIR FLOOR PLAN	1 of 1
60356/005	RESERVOIR SECTION AND DETAILS	1 of 1
60356/006	RESERVOIR ROOF PLAN AND DETAILS	1 of 1
60356/007	DN300 OUTLET CHAMBER AND SCOUR DETAILS	1 of 1
60356/008	DN150 INLET CHAMBER AND DETAILS	1 of 1
60356/010	INLET AND OUTLET PIPELINE PLAN AND LONG SECTIONS	1 of 1
60356/011	DN200 IN-LINE INLET METER	1 of 1
60356/012	DN100 IN-LINE OUTLET METER	1 of 1
60356/013	TYPICAL AIR VALVE CHAMBER	1 of 1
60356/014	TYPICAL SCOUR VALVE CHAMBER	1 of 1
60356/015	DN150 CROSS CONNECTION CHAMBER	1 of 1
60356/016	STORMWATER PLAN AND LONGSECTIONS	1 of 1
60356/017	ROAD PLAN AND SECTIONS	1 of 1
60356/018	ACCESS ROAD LONG SECTION AND CROSS SECTION	1 of 1
60356/019	TELEMETRY ROOM	1 of 1

Standard Drawings

Reinforcing Ref. Drawings

Geotech Ref. Drawings

Revision	Date	Description
0	OCT. 2021	FOR TENDER PURPOSES ONLY

NOTE:No construction work to commence until land and servitude acquisitions have been completed

Acquisitions completed:

Date Engineer NORTH POINT

UNDERGROUND SERVICES CHECKED –

SERVICE	DATE	SIGNATURE
S.W DRAINS		
SEWERS		
WATERMAINS		
TELKOM CABLES		
ELECTRIC CABLES		
S.A.R CABLES		
E.S.C CABLES		
OIL PIPE LINE		

NOTE: Only underground services affected by new construction are shown. Care must be taken during excavations for road foundations,trenches etc.to avoid damage to underground services such as sewers,drains,cables,watermains and connections.Wherever possible these must be located before work begins.

Contract No. WS 7400

Project No. D732

Planning Unit EWS

Project Title

THANDOKUHLE RESERVOIR COMPARTMENT 1

CONSTRUCTION OF A 3ML REINFORCED CONCRETE RESERVOIR, 150mm Ø STEEL INLET, 300mm Ø STEEL OUTLET PIPELINES AND ASSOCIATED WORKS

Drawing Title

STANDARD ASSOCIATED DETAILS

Scales : As Shown	
Original paper size : A0	
Designed : D. Ramghulam	Date : May 2021
Checked : A. Goorun	Drawn : N. Adams

Area Engineer (W.O.)

Manager (W.D.)

Director (Water)

E.Mseweli – Head: Water & Sanitation Unit

Drawing No.	Sheet	Rev.
60356/009	2 of 2	0

ITEM No	NOM DIA	DESCRIPTION	DIMENSIONS (mm) A	B	C	F/F	No. OF
SCHEDULE FOR OUTLET PIPEWORK							
A1	DN300	EQUAL TEE (ANSI B16.1) FITTED WITH 100MM LONG PIPE ALL ROUND, FAR		430	425	850	1
A2	DN300 x DN250	CONCENTRIC REDUCER (ANSIB16.9), BOTH ENDS FITTED WITH 100MM PIPE, B.E.F				430	1
A3	DN250	FLANGE ADAPTER TO SUIT					1
A4	DN300	PN16 BLANK FLANGE					1

PIPEWORK & FITTINGS SCHEDULE

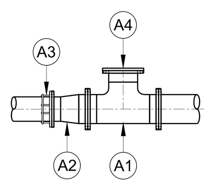

NOTE : ALL FLANGES TO BE TO TABLE 1600/3 (SANS 1123 - 2011)

DETAIL 1: FUTURE OUTLET CONNECTION

SCALE 1:50

PIPEWORK & FITTINGS SCHEDULE

ITEM No	NOM DIA	DESCRIPTION	DIMENSIONS (mm) A	B	C	F/F	No. OF
SCHEDULE FOR INLET PIPEWORK							
B1	DN300 x DN150	REDUCING TEE FITTED WITH 100mm LONG PIPE ALL ROUND, FAR				765	1
B2	DN300 x DN150	CONCENTRIC REDUCER (ANSIB16.9), BOTH ENDS FITTED WITH 100MM PIPE, B.E.F				450	1
B3	DN150	BLANK FLANGE TO SUIT					1

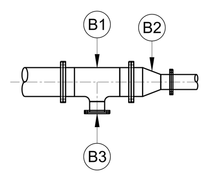

NOTE : ALL FLANGES TO BE TO TABLE 1600/3 (SANS 1123 - 2011)

DETAIL 2: FUTURE INLET CONNECTION

SCALE 1:50

PIPEWORK & FITTINGS SCHEDULE

ITEM No	NOM DIA	DESCRIPTION	DIMENSIONS (mm) A	B	C	F/F	No. OF
SCHEDULE FOR RETICULATION CONNECTION PIPEWORK							
C1	DN100	EQUAL TEE FITTED WITH 100mm LONG PIPE ALL ROUND, FAR		220	220	440	1
C2	DN100	FLANGE ADAPTER TO SUIT					2
C3	DN250 x DN100	CONCENTRIC REDUCER (ANSIB16.9), BOTH ENDS FITTED WITH 100MM PIPE, B.E.F				380	1
C4	DN250	RSV VALVE TO SANS 664				356	1
C5	DN250	SPOOL PIPE, BOTH ENDS FLANGED				750	1
C6	DN250	FLANGE ADAPTER TO SUIT					1

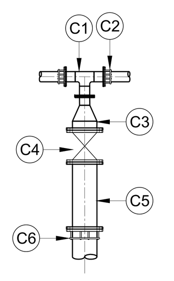

NOTE : ALL FLANGES TO BE TO TABLE 1600/3 (SANS 1123 - 2011)

DETAIL 3: RETICULATION CROSS CONNECTION

SCALE 1:50

NOTES:
ALL SPECIALS TO BE EPOXY COATED (S.F.E) TO PROJECT SPECIFICATIONS UNLESS OTHERWISE STATED. ALL PIPE TO BE TO SANS 719, GRADE X42, 4.5mm THICK.
ALL FLANGES TO BE TO TABLE 1600/3 (SANS 1123 - 2011).
IF FACE TO FACE DIMENSION OF FITTINGS DIFFER TO ACTUAL THE CONTRACTOR MUST INFORM THE ENGINEER PRIOR TO PIPE FABRICATION.

ABBREVIATIONS :
- DN - DIAMETER NOMINAL
- OD - OUTSIDE DIAMETER
- ID - INSIDE DIAMETER
- M.S - MILD STEEL
- S.S - STAINLESS STEEL
- H.D.G.M.S - HOT DIPPED GALVANISED MILD STEEL
- G.M.S - GALVANISED MILD STEEL
- C.I - CAST IRON
- F.R.L. - FINAL ROAD LEVEL
- F.O.E - FLANGED ONE END
- F.B.E - FLANGED BOTH ENDS
- F.A.R - FLANGED ALL ROUND
- L.R.B - LONG RADIUS BEND
- S.R.B - SHORT RADIUS BEND
- F/F - FACE TO FACE DIMENSION
- C/F - CENTRE TO FACE DIMENSION
- P.C. - PLAIN END COATED
- P.E. - PLAIN END (FOR WELDING)
- S.F.E. - SOLVENT FREE EPOXY

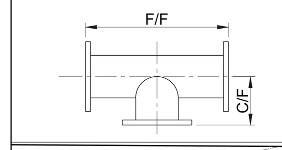

LEGEND
- PROPOSED OUTLET PIPELINE
- PROPOSED INLET PIPELINE
- PROPOSED STORM WATER PIPELINE
- PROPOSED CROSS CONNECTION PIPELINE
- TAPER
- PROPOSED METER
- POWER LINE
- FLOW ARROW
- NEW FENCE
- EXISTING FENCE

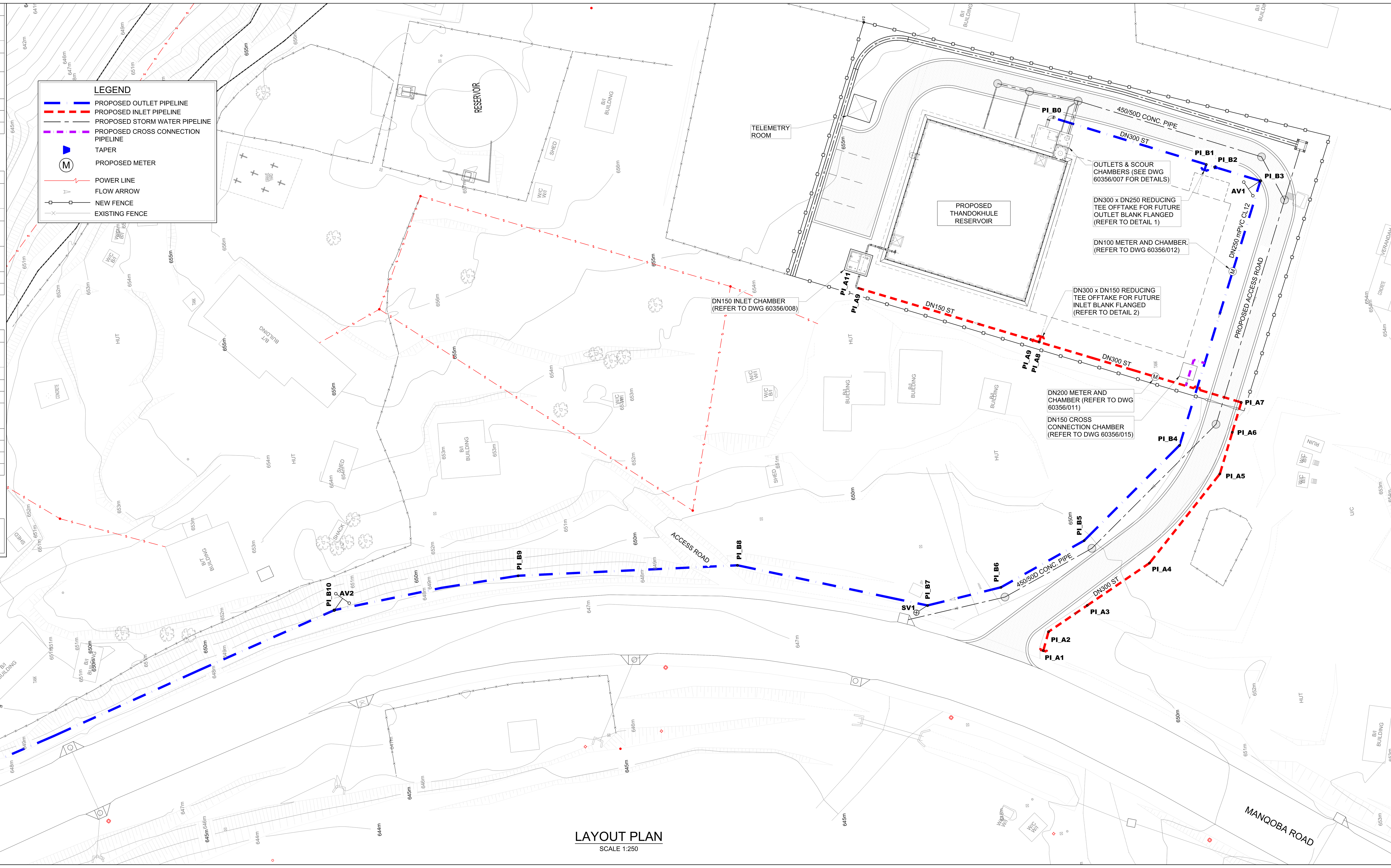

LAYOUT PLAN

SCALE 1:250

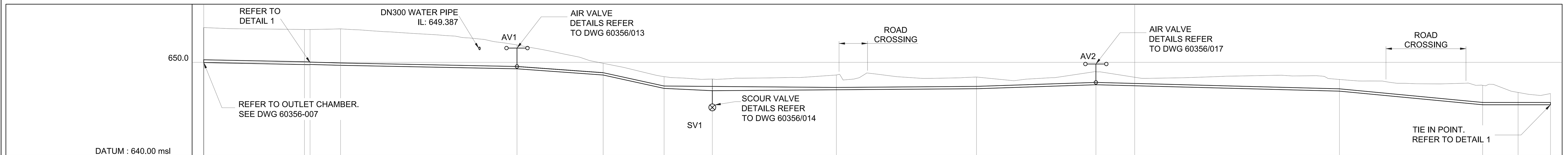

PEG DISTANCE (m)	GROUND LEVEL (m)	INVERT LEVEL (m)	DEPTH TO IL (m)	GRADE (1:_)	PIPE DISCRIPTION	REFERENCE	SLOPE AND CUMUL. LENGTH
0.00	653.74	649.98	3.76	-100.00	300mm dia. STEEL PIPE	PI_B0	0.00
21.64	653.52	649.76	3.76	-100.00	250mm dia MPVC WATER PIPE	PI_B1, PI_B2	21.65
29.39	653.59	649.69	3.91			PI_B3	29.39
40.00	653.27	649.58	3.69				
60.00	652.47	649.38	3.09				
67.30	651.87	649.31	2.57	-27.82		PI_B4	67.31
80.00	650.64	648.85	1.78				
85.81	649.90	648.64	1.25	-9.15		PI_B5	85.83
98.90	648.47	647.21	1.25	-41.47		PI_B6	98.99
109.27	648.22	646.96	1.25	267.65		PI_B7	109.36
120.00	648.32	647.00	1.32				
135.91	648.65	647.06	1.59	267.64		PI_B8	136.01
140.00	648.25	647.08	1.18				
160.00	648.32	647.15	1.17				
166.01	648.43	647.17	1.25	60.15		PI_B9	166.11
180.00	648.12	647.41	0.71				
191.66	649.00	647.60	1.40	-76.10		PI_B10	191.76
200.00	648.40	647.49	0.91				
220.00	648.55	647.23	1.32				
240.00	648.56	646.96	1.59				
243.98	648.17	646.91	1.25	-21.03		PI_B11	244.09
260.00	647.77	646.15	1.62				
274.56	647.52	645.82	1.70	0.00		PI_B12	274.88
280.49	647.00 646.91	645.82 645.82	1.18 1.09	0.00		PI_B13	282.50
288.09	646.57	645.82	0.75			PI_B14	289.46

OUTLET PIPELINE LONGITUDINAL SECTION

SCALE : Vert 1 :250
Hor 1 :500

SETTING OUT DATA

REF	Y	X
PI_B0	23 146.416	3 284 312.787
PI_B1	23 154.516	3 284 332.858
PI_B2	23 154.965	3 284 333.971
PI_B3	23 157.415	3 284 340.042
PI_B4	23 192.577	3 284 325.866
PI_B5	23 204.477	3 284 311.685
PI_B6	23 209.872	3 284 299.763
PI_B7	23 211.474	3 284 289.520
PI_B8	23 203.717	3 284 264.033
PI_B9	23 202.528	3 284 233.958
PI_B10	23 205.032	3 284 208.427
PI_B11	23 222.081	3 284 158.963
PI_B12	23 226.669	3 284 128.407
PI_B13	23 227.493	3 284 122.539
PI_B14	23 230.047	3 284 115.384

SETTING OUT DATA

REF	Y	X
PI_A1	23 219.041	3 284 304.787
PI_A2	23 216.512	3 284 305.732
PI_A3	23 213.375	3 284 311.335
PI_A4	23 208.333	3 284 320.341
PI_A5	23 196.981	3 284 331.018
PI_A6	23 191.438	3 284 333.216
PI_A7	23 187.462	3 284 334.793
PI_A8	23 176.802	3 284 307.917
PI_A9	23 176.363	3 284 306.800
PI_A10	23 167.120	3 284 283.506
PI_A11	23 165.742	3 284 284.060

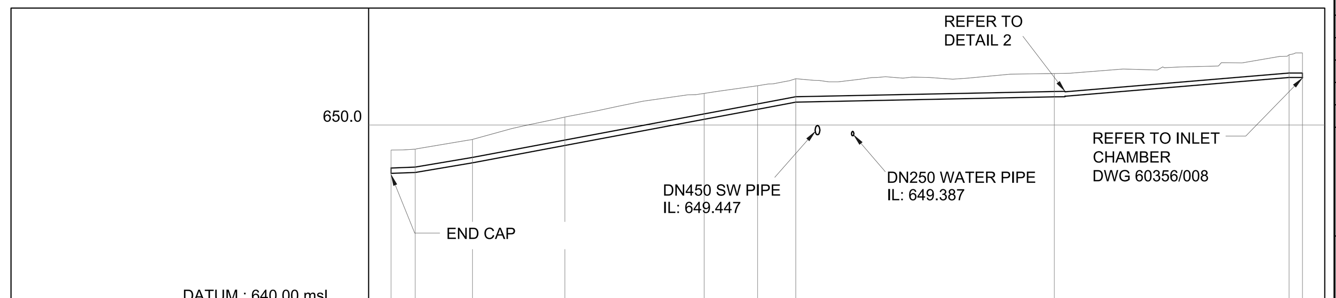

PEG DISTANCE (m)	GROUND LEVEL (m)	INVERT LEVEL (m)	DEPTH TO IL (m)	GRADE (1:_)	PIPE DISCRIPTION	REFERENCE	SLOPE AND CUMUL. LENGTH
0.00	648.61	647.30	1.31	54.93	300mm dia STEEL WATER PIPE	PI_A1	0.00
2.70	648.65	647.35	1.31	11.85		PI_A2	2.70
9.12	649.20	647.89	1.30	10.68		PI_A3	9.14
19.44	650.44	648.86	1.59	10.68		PI_A4	19.51
35.03	651.77	650.32	1.45	10.68		PI_A5	35.16
40.99	652.19	650.88	1.31	10.68		PI_A6	41.15
45.27	652.58	651.28	1.31	98.07		PI_A7	45.45
60.00	652.66	651.43	1.23				
74.18	652.88	651.57	1.30	135.49	150mm STEEL WATER PIPE	PI_A8	74.36
80.00	653.05	651.78	1.27				
100.44	653.92	652.65	1.27	0.00		PI_A10	100.65
101.93	653.92	652.65	1.27			PI_A11	101.95

INLET PIPELINE LONGITUDINAL SECTION

SCALE : Vert 1 :250
Hor 1 :500

eTHEKWINI WATER SERVICES
WATER DESIGN BRANCH
eTHEKWINI

REDUCED PLAN USE SCALE BELOW
0 10 20 30 40 50 60 70
70mm ON ORIGINAL PLAN

LEGEND
EXISTING UNDERGROUND SERVICES ARE AS SHOWN BELOW.
- SEWERS AND M.H'S
- STORM WATER DRAINS AND M.H'S
- WATER MAINS AND VALVES
- ELECTRICITY CABLES
- TELKOM CABLES
- OIL PIPELINES

CONSULTANT:
NAIDU CONSULTING
1st Floor
No.5 The Boulevard
West Way Office Park
Westville, Durban
Tel : +27 (0) 31 265 6007
Fax : +27 (0) 31 265 6011
E-mail : info@naiduconsulting.com

DRAWING No.: D732-52-5101

FOR TENDER

Ref Drg.	Description	
60356/002	RESERVOIR SITE PLAN LAYOUT	1 of 1
60356/007	DN300 OUTLET CHAMBER AND SCOUR DETAILS	1 of 1
60356/008	DN150 INLET CHAMBER AND DETAILS	1 of 1
60356/009	STANDARD ASSOCIATED DETAILS	1 of 2
60356/009	STANDARD ASSOCIATED DETAILS	2 of 2
60356/011	DN200 IN-LINE INLET METER	1 of 1
60356/012	DN100 IN-LINE OUTLET METER	1 of 1
60356/013	TYPICAL AIR VALVE CHAMBER	1 of 1
60356/014	TYPICAL SCOUR VALVE CHAMBER	1 of 1
60356/015	DN150 CROSS CONNECTION CHAMBER	1 of 1
60356/016	STORMWATER PLAN AND LONGSECTIONS	1 of 1
60356/017	ROAD PLAN AND SECTIONS	1 of 1
60356/018	ACCESS ROAD LONG SECTION AND CROSS SECTION	1 of 1
Standard Drawings		
45001	THRUST BLOCK	1 of 1
45002	TYPICAL TRENCH DETAILS	1 of 1

Reinforcing Ref. Drawings

Revision	Date	Description
0	OCT. 2021	FOR TENDER PURPOSES ONLY

NOTE: No construction work to commence until land and servitude acquisitions have been completed

Acquisitions completed:

Date Engineer

NORTH POINT

UNDERGROUND SERVICES CHECKED –

SERVICE	DATE	SIGNATURE
S.W DRAINS		
SEWERS		
WATERMAINS		
TELKOM CABLES		
ELECTRIC CABLES		
S.A.R CABLES		
E.S.C CABLES		
OIL PIPE LINE		

NOTE: Only underground services affected by new construction are shown. Care must be taken during excavations for road foundations, trenches etc., to avoid damage to underground services such as sewers, drains, cables, watermains and connections. Wherever possible these must be located before work begins.

Contract No. WS 7400

Project No. D732

Planning Unit EWS

Project Title

THANDOKUHLE RESERVOIR COMPARTMENT 1

CONSTRUCTION OF A 3ML REINFORCED CONCRETE RESERVOIR, 150mm Ø STEEL INLET, 300mm Ø STEEL OUTLET PIPELINES AND ASSOCIATED WORKS

Drawing Title

INLET, OUTLET PIPELINE PLAN & LONG SECTIONS

Scales : As Shown	
Original paper size : A0	
Designed : D. Ramghulam	Date : May 2021
Checked : A. Goorun	Drawn : N. Adams

Area Engineer (W.O.)

Manager (W.D.)

Director (Water)

E.Msweli – Head: Water & Sanitation Unit

Drawing No.	Sheet	Rev.
60356/010	1 of 1	0

CONTRACTOR TO PROVIDE FINAL FABRICATION DETAILS AND SHOP DRAWINGS TO BE APPROVED BY THE ENGINEER PRIOR TO FABRICATION

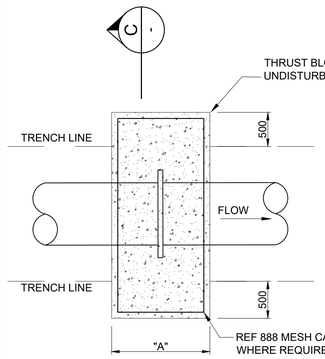

PLAN VIEW

REFER TO CONCRETE NOTES FOR ADDITIONAL DETAILS. CONTRACTOR TOOK NOTE OF NOTE 6 WHEN CASTING OF ANCHOR BLOCKS

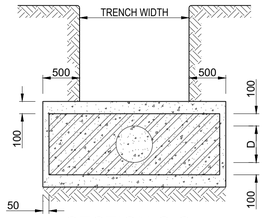

SECTION C-C

EXISTING PIPELINE SIZE	WIDTH "A" (mm)
DN50 - DN200	300
DN250 - DN400	500
DN450 - DN600	700

DETAIL A: THRUST BLOCK DETAILS

SCALE 1:25

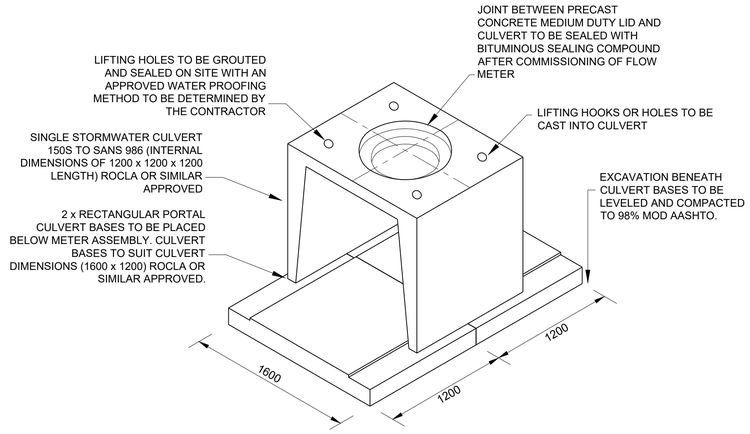

ISOMETRIC VIEW OF TYPE 1 CULVERT AND CULVERT BASE ARRANGEMENT

N.T.S

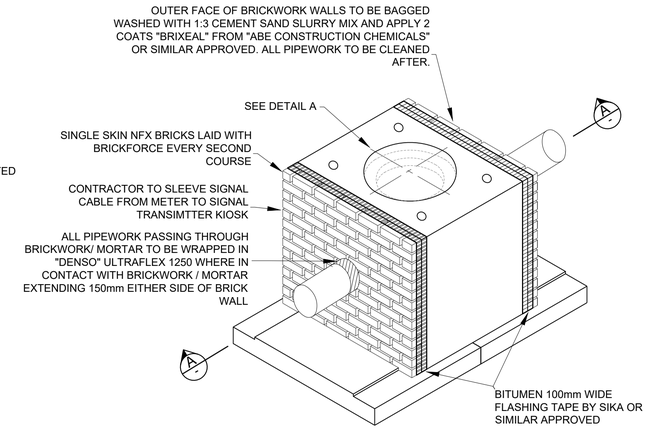

NFX BRICK WALL END CLOSING DETAIL FOR TYPE 1 AND TYPE 2 METER PROTECTION CULVERT

N.T.S

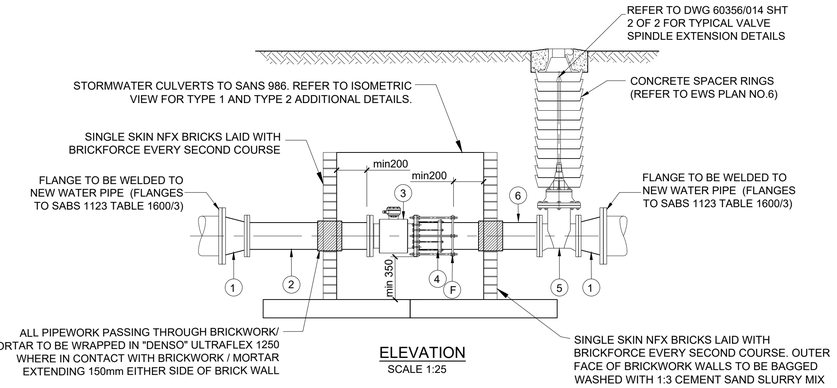

ELEVATION

SCALE 1:25

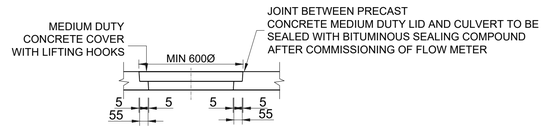

DETAIL A

DETAIL OF CONCRETE CULVERT COVER

SCALE 1:20

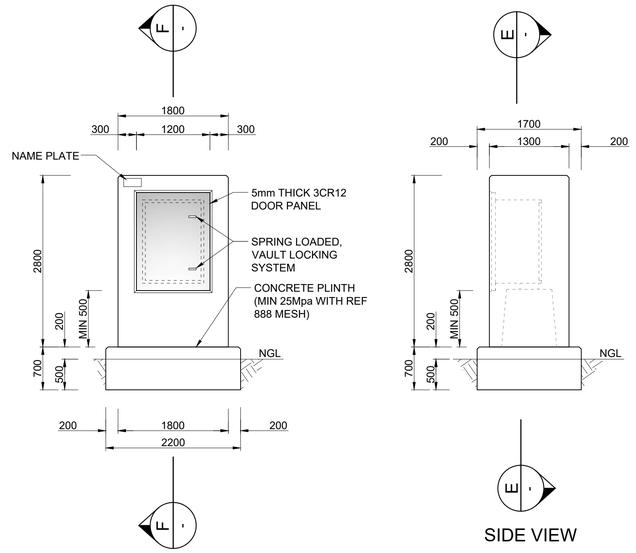

FRONT VIEW

SIDE VIEW

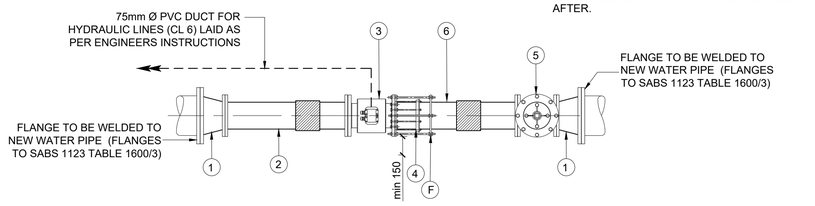

PLAN

SCALE 1:25

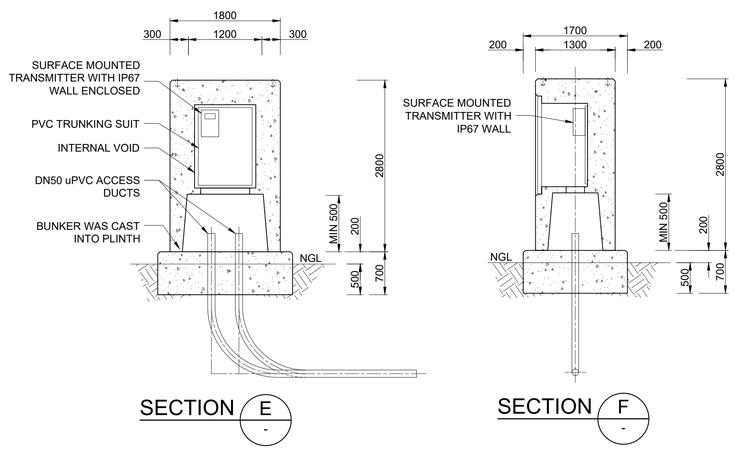

SECTION E

SECTION F

CONCRETE KIOSK DETAIL

SCALE 1 : 50

PIPEWORK AND FITTINGS SCHEDULE (PN16)

ITEM No.	NOM DIA	DESCRIPTION	F/F	No. OF
1	DN300 x DN200	CONCENTRIC REDUCER TO ANSI B16.9, F.B.E.	203	2
2	DN200	SPOOL PIECE, FBE. FLANGE TO MATCH ITEM 3	1000	1
3	DN200	INLINE FLANGED ULTRASONIC METER COMPLETE WITH SIGNAL TRANSMITTER, CONVERTER AND TRANSMITTER CABLE	384	1
4	DN200	RESTRAINED FLANGE ADAPTOR (KAMFLEX, VIKING JOHNSON) OR SIMILAR APPROVED TO SUIT STEEL SPOOL PIPE. FLANGE TO MATCH ITEM 3. NOTE F: ANCHORING OR RESTRAINING FLANGE TO BE WELDED APPROXIMATELY 300mm FROM PLAIN END OF ITEM 6. RESTRAINING FLANGE ADAPTOR TO USE MINIMUM OF 4 NUMBER GRADE 4.8 RESTRAINING BOLTS, EQUALLY SPACED AROUND CIRCUMFERENCE OF FLANGES. RESTRAINING FLANGE TO BE TO MANUFACTURERS SPECIFICATION AND APPROVED BY THE EMPLOYER'S REPRESENTATIVE.		1
5	DN200	WEDGE GATE VALVE TO SANS 664	317	1
6	DN200	SPOOL PIPE, F.O.E, OTHER END FITTED WITH RESTRAINING FLANGE TO SUIT ITEM 4 (SEE ITEM 4 FOR DETAILS)	1000	1

NOTES:
ALL SPECIALS TO BE EPOXY COATED (S.F.E) TO PROJECT SPECIFICATIONS UNLESS OTHERWISE STATED.
ALL PIPE TO BE TO SANS 719, GRADE X42, 4.5mm THICK.
ALL FLANGES TO BE TO TABLE 1600/3 (SANS 1123 - 2011).
IF FACE TO FACE DIMENSION OF FITTINGS DIFFER TO ACTUAL THE CONTRACTOR MUST INFORM THE ENGINEER PRIOR TO PIPE FABRICATION.

GENERAL NOTES

PIPEWORK

1. ALL PIPEWORK TO BE MILD STEEL UNLESS OTHERWISE STATED.
2. THE CONTRACTOR SHALL VERIFY THE DIMENSIONS OF ALL PIPEWORK AND ADVISE THE ENGINEER OF ANY DISCREPANCIES PRIOR TO FABRICATION.
3. ALL PIPES GREATER THAN AND INCLUDING DN100, FITTED TO EQUIPMENT OR FITTINGS, OR WHERE SPECIFICALLY INDICATED SHALL BE FLANGED TO SANS 1123:2007 (TABLE 3) OR BS EN 1092 : 1-2007 WHERE SANS 1123:2007 (TABLE 3) DOES NOT APPLY OR AS SPECIFIED ON THE DRAWINGS. SHOULD THE RESPECTIVE FLANGE DRILLING NOT BE COVERED IN THE ABOVE SPECIFICATIONS THE RESIDENT ENGINEER SHALL BE CONSULTED FOR THE APPROPRIATE SPECIFICATION, BEFORE PROCURING ANY VALVES OR FLANGES.
4. SURFACE PREPARATION FOR APPLICATION OF CORROSION PROTECTION MATERIALS SHALL BE IN ACCORDANCE WITH THE PROJECT SPECIFICATIONS.
5. DAMAGED COATINGS AND LININGS SHALL BE REPAIRED IN ACCORDANCE WITH THE PROJECT SPECIFICATIONS.
6. ALL PIPEWORK AND SPECIALS TO BE COATED AND LINED AS PER THE PROJECT SPECIFICATIONS.
7. ALL JOINTS SHALL BE COATED, PROTECTED AND WRAPPED AS PER THE PROJECT SPECIFICATIONS.
8. THE PRESSURE RATINGS OF ALL PIPEWORK, FLANGES AND VALVES, SHALL BE AS INDICATED IN THE SCHEDULES OF FITTINGS.
9. ALL MILD STEEL PIPEWORK, COLLARS, WRAPPERS AND CROTCH PLATES TO BE MANUFACTURED FROM MINIMUM GRADE X42 STEEL AND WELDED IN ACCORDANCE WITH THE PROJECT SPECIFICATIONS.
   WHERE THE GRADE OF STEEL FOR THE MAIN PIPE IS X52 OR X65, COLLARS AND WRAPPERS SHALL BE FABRICATED FROM STEEL PIPE OF THE SAME GRADE AS THE MAIN PIPE AS SUPPLIED FREE-ISSUE BY THE EMPLOYER, UNLESS OTHERWISE STATED ON THE DRAWINGS.
10. ALL BENDS TO BE FABRICATED AND DIMENSIONED IN ACCORDANCE WITH THE PROJECT SPECIFICATIONS.

ABBREVIATIONS :

DN - DIAMETER NOMINAL
OD - OUTSIDE DIAMETER
ID - INSIDE DIAMETER
M.S - MILD STEEL
S.S - STAINLESS STEEL
H.D.G.M.S - HOT DIPPED GALVANISED MILD STEEL
G.M.S - GALVANISED MILD STEEL
C.I - CAST IRON
F.R.L. - FINAL ROAD LEVEL

F.O.E - FLANGED ONE END
F.B.E - FLANGED BOTH ENDS
F.A.R - FLANGED ALL ROUND
F/F - FACE TO FACE DIMENSION
C/F - CENTRE TO FACE DIMENSION
L.R.B - LONG RADIUS BEND
S.R.B - SHORT RADIUS BEND
P.C. - PLAIN END COATED
P.E. - PLAIN END (FOR WELDING)

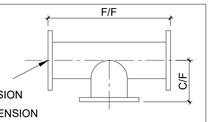

eTHEKWINI WATER SERVICES

WATER DESIGN BRANCH

eTHEKWINI

REDUCED PLAN USE SCALE BELOW

0 10 20 30 40 50 60 70

70mm ON ORIGINAL PLAN

CONSULTANT:

NAIDU CONSULTING

1st Floor
No.5 The Boulevard
West Way Office Park
Westville, Durban

Tel : +27 (0) 31 265 6007
Fax : +27 (0) 31 265 6011
E-mail : info@naiduconsulting.com

DRAWING No.: D732-52-5255

FOR TENDER

Ref Drg.	Description	
60356/002	RESERVOIR SITE PLAN LAYOUT	1 of 1
60356/009	STANDARD ASSOCIATED DETAILS	1 of 2
60356/009	STANDARD ASSOCIATED DETAILS	2 of 2
60356/010	INLET AND OUTLET PIPELINE PLAN AND LONG SECTIONS	1 of 1

Standard Drawings

45001	THRUST BLOCK	1 of 1
45002	TYPICAL TRENCH DETAILS	1 of 1

Revision	Date	Description
0	OCT 2021	FOR TENDER PURPOSES ONLY

UNDERGROUND SERVICES CHECKED		
SERVICE	DATE	SIGNATURE
S.W DRAINS		
SEWERS		
WATERMAINS		
G.P.O CABLES		
ELECTRIC CABLES		
S.A.R CABLES		
E.S.C CABLES		
OIL PIPE LINE		

NOTE: Only underground services affected by new construction are shown. Care must be taken during excavations for road foundations,trenches etc.,to avoid damage to underground services such as sewers,drains,cables, watermains and connections.Wherever possible these must be located before work begins.

Contract No. WS 7400

Project No. D732

Planning Unit EWS

Project Title

THANDOKUHLE RESERVOIR COMPARTMENT 1

CONSTRUCTION OF A 3ML REINFORCED CONCRETE RESERVOIR,
150mm Ø STEEL INLET, 300mm Ø STEEL OUTLET PIPELINES AND ASSOCIATED WORKS

Drawing Title

DN200 INLINE METER ASSEMBLY

Scales : As Shown	Original Paper : A1
Designed :D. Ramghulam	Date : May 2021
Checked : A. Goorun	Drawn : N. Adams

Area Engineer : Water Operations

Manager (W.D.)

Director (Water)

E.Msweli – Head: Water & Sanitation Unit

Drawing No.	Sheet	Rev.
60356/011	1 of 1	0

CONTRACTOR TO PROVIDE FINAL FABRICATION DETAILS AND SHOP DRAWINGS TO BE APPROVED BY THE ENGINEER PRIOR TO FABRICATION

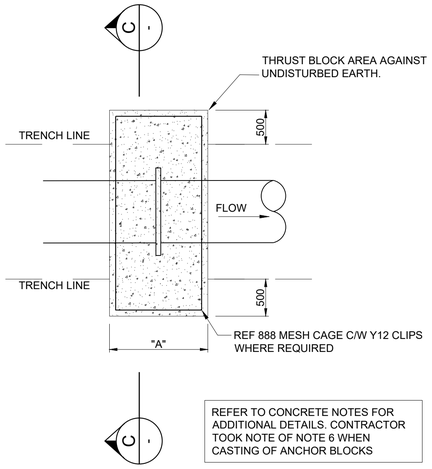

PLAN VIEW

REFER TO CONCRETE NOTES FOR ADDITIONAL DETAILS. CONTRACTOR TOOK NOTE OF NOTE 6 WHEN CASTING OF ANCHOR BLOCKS

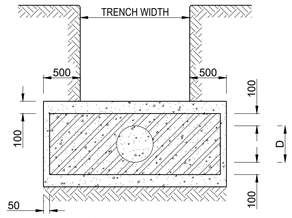

SECTION C-C

EXISTING PIPELINE SIZE	WIDTH "A" (mm)
DN50 - DN200	300
DN250 - DN400	500
DN450 - DN600	700

DETAIL A: THRUST BLOCK DETAILS

SCALE 1:25

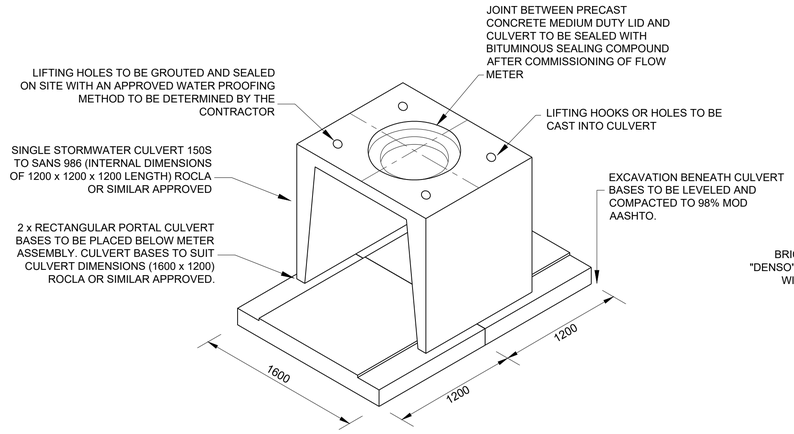

ISOMETRIC VIEW OF TYPE 1 CULVERT AND CULVERT BASE ARRANGEMENT

N.T.S

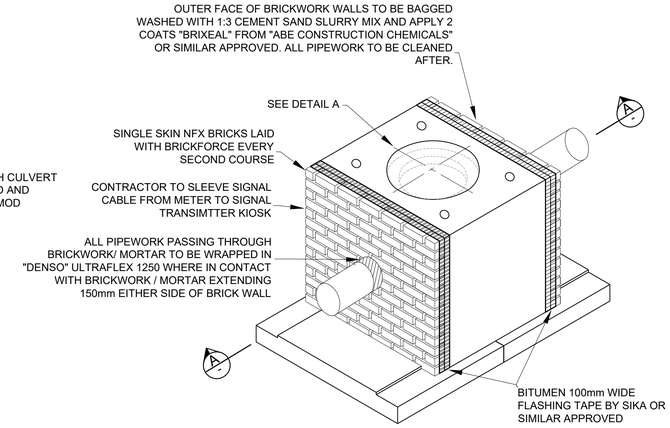

NFX BRICK WALL END CLOSING DETAIL FOR TYPE 1 AND TYPE 2 METER PROTECTION CULVERT

N.T.S

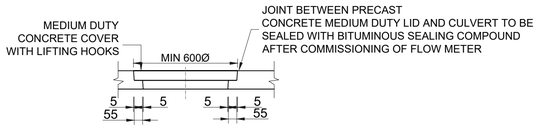

DETAIL A
DETAIL OF CONCRETE CULVERT COVER

SCALE 1:20

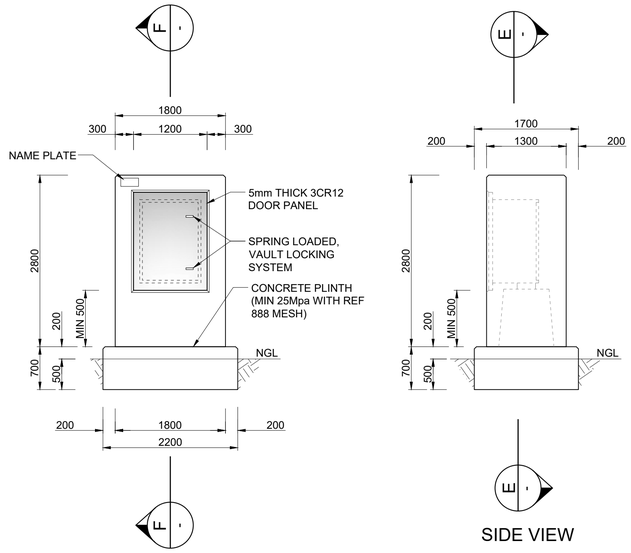

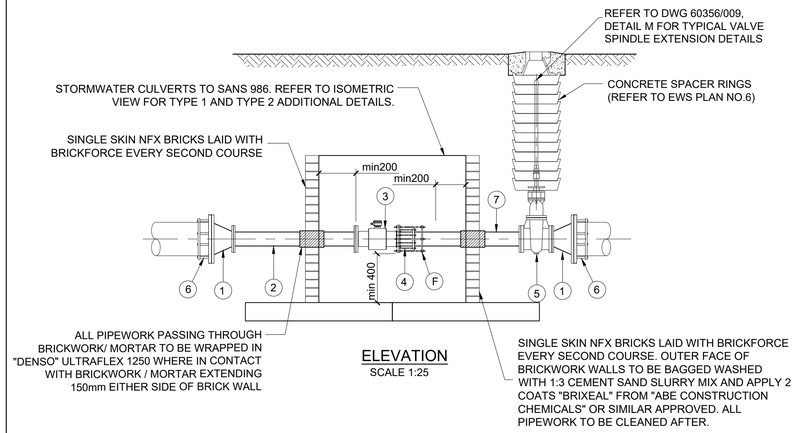

ELEVATION

SCALE 1:25

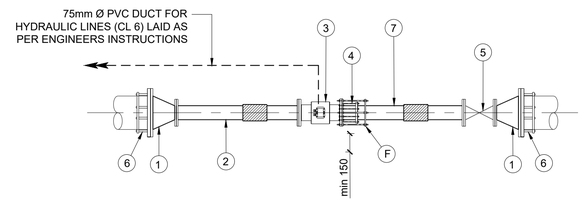

PLAN

SCALE 1:25

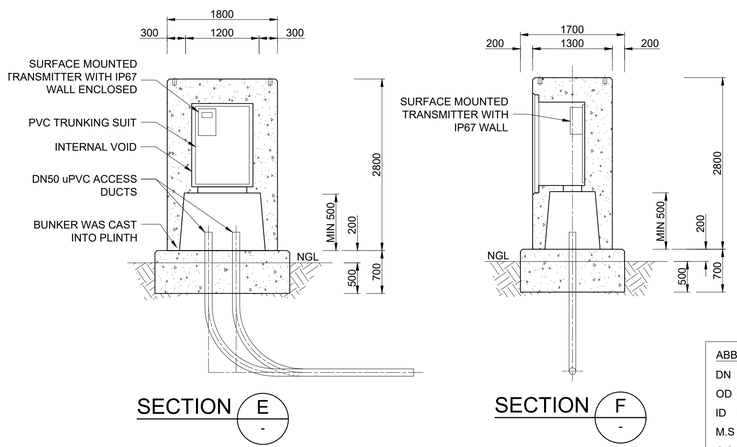

SECTION E

SECTION F

CONCRETE KIOSK DETAIL

SCALE 1 : 50

GENERAL NOTES

PIPEWORK

1. ALL PIPEWORK TO BE MILD STEEL UNLESS OTHERWISE STATED.
2. THE CONTRACTOR SHALL VERIFY THE DIMENSIONS OF ALL PIPEWORK AND ADVISE THE ENGINEER OF ANY DISCREPANCIES PRIOR TO FABRICATION.
3. ALL PIPES GREATER THAN AND INCLUDING DN100, FITTED TO EQUIPMENT OR FITTINGS, OR WHERE SPECIFICALLY INDICATED SHALL BE FLANGED TO SANS 1123:2007 (TABLE 3) OR BS EN 1092 : 1-2007 WHERE SANS 1123:2007 (TABLE 3) DOES NOT APPLY OR AS SPECIFIED ON THE DRAWINGS. SHOULD THE RESPECTIVE FLANGE DRILLING NOT BE COVERED IN THE ABOVE SPECIFICATIONS THE RESIDENT ENGINEER SHALL BE CONSULTED FOR THE APPROPRIATE SPECIFICATION, BEFORE PROCURING ANY VALVES OR FLANGES.
4. SURFACE PREPARATION FOR APPLICATION OF CORROSION PROTECTION MATERIALS SHALL BE IN ACCORDANCE WITH THE PROJECT SPECIFICATIONS.
5. DAMAGED COATINGS AND LININGS SHALL BE REPAIRED IN ACCORDANCE WITH THE PROJECT SPECIFICATIONS.
6. ALL PIPEWORK AND SPECIALS TO BE COATED AND LINED AS PER THE PROJECT SPECIFICATIONS.
7. ALL JOINTS SHALL BE COATED, PROTECTED AND WRAPPED AS PER THE PROJECT SPECIFICATIONS.
8. THE PRESSURE RATINGS OF ALL PIPEWORK, FLANGES AND VALVES, SHALL BE AS INDICATED IN THE SCHEDULES OF FITTINGS.
9. ALL MILD STEEL PIPEWORK, COLLARS, WRAPPERS AND CROTCH PLATES TO BE MANUFACTURED FROM MINIMUM GRADE X42 STEEL AND WELDED IN ACCORDANCE WITH THE PROJECT SPECIFICATIONS.
   WHERE THE GRADE OF STEEL FOR THE MAIN PIPE IS X52 OR X65, COLLARS AND WRAPPERS SHALL BE FABRICATED FROM STEEL PIPE OF THE SAME GRADE AS THE MAIN PIPE AS SUPPLIED FREE-ISSUE BY THE EMPLOYER, UNLESS OTHERWISE STATED ON THE DRAWINGS.
10. ALL BENDS TO BE FABRICATED AND DIMENSIONED IN ACCORDANCE WITH THE PROJECT SPECIFICATIONS.

PIPEWORK AND FITTINGS SCHEDULE (PN16)

ITEM No.	NOM DIA	DESCRIPTION	F/F	No. OF
1	DN250 x DN100	CONCENTRIC REDUCER TO ANSI B16.9, F.B.E.	212	2
2	DN100	SPOOL PIECE, FBE. FLANGE TO MATCH ITEM 3	1000	1
3	DN100	INLINE FLANGED ULTRASONIC METER COMPLETE WITH SIGNAL TRANSMITTER, CONVERTER AND TRANSMITTER CABLE	350	1
4	DN100	RESTRAINED FLANGE ADAPTOR (KAMFLEX, VIKING JOHNSON) OR SIMILAR APPROVED TO SUIT STEEL SPOOL PIPE. FLANGE TO MATCH ITEM 3. NOTE F: ANCHORING OR RESTRAINING FLANGE TO BE WELDED APPROXIMATELY 300mm FROM PLAIN END OF ITEM 7. RESTRAINING FLANGE ADAPTOR TO USE MINIMUM OF 4 NUMBER GRADE 4.8 RESTRAINING BOLTS, EQUALLY SPACED AROUND CIRCUMFERENCE OF FLANGES. RESTRAINING FLANGE TO BE TO MANUFACTURERS SPECIFICATION AND APPROVED BY THE EMPLOYER'S REPRESENTATIVE.		1
5	DN100	WEDGE GATE VALVE TO SANS 664	254	1
6	DN250	FLANGE ADAPTOR TO SUIT (KAMFLEX, VIKING JOHNSON OR SIMILAR APPROVED)		2
7	DN100	SPOOL PIPE, F.O.E, OTHER END FITTED WITH RESTRAINING FLANGE TO SUIT ITEM 4 (SEE ITEM 4 FOR DETAILS)	1000	1

NOTES:
ALL SPECIALS TO BE EPOXY COATED (S.F.E) TO PROJECT SPECIFICATIONS UNLESS OTHERWISE STATED. ALL PIPE TO BE TO SANS 719, GRADE X42, 4.5mm THICK.
ALL FLANGES TO BE TO TABLE 1600/3 (SANS 1123 - 2011).
IF FACE TO FACE DIMENSION OF FITTINGS DIFFER TO ACTUAL THE CONTRACTOR MUST INFORM THE ENGINEER PRIOR TO PIPE FABRICATION.

ABBREVIATIONS :

DN - DIAMETER NOMINAL	F.O.E - FLANGED ONE END
OD - OUTSIDE DIAMETER	F.B.E - FLANGED BOTH ENDS
ID - INSIDE DIAMETER	F.A.R - FLANGED ALL ROUND
M.S - MILD STEEL	F/F - FACE TO FACE DIMENSION
S.S - STAINLESS STEEL	C/F - CENTRE TO FACE DIMENSION
H.D.G.M.S - HOT DIPPED GALVANISED MILD STEEL	L.R.B - LONG RADIUS BEND
G.M.S - GALVANISED MILD STEEL	S.R.B - SHORT RADIUS BEND
C.I - CAST IRON	P.C. - PLAIN END COATED
F.R.L. - FINAL ROAD LEVEL	P.E. - PLAIN END (FOR WELDING)

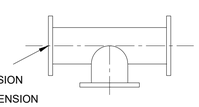

eTHEKWINI WATER SERVICES

WATER DESIGN BRANCH eTHEKWINI

REDUCED PLAN USE SCALE BELOW

0 10 20 30 40 50 60 70

70mm ON ORIGINAL PLAN

CONSULTANT:

NAIDU CONSULTING

1st Floor
No.5 The Boulevard
West Way Office Park
Westville, Durban
Tel : +27 (0) 31 265 6007
Fax : +27 (0) 31 265 6011
E-mail : info@naiduconsulting.com

DRAWING No.: D732-52-5256

FOR TENDER

Ref Drg.	Description	
60356/002	RESERVOIR SITE PLAN LAYOUT	1 of 1
60356/009	STANDARD ASSOCIATED DETAILS	1 of 2
60356/009	STANDARD ASSOCIATED DETAILS	2 of 2
60356/010	INLET AND OUTLET PIPELINE PLAN AND LONG SECTIONS	1 of 1

Standard Drawings

45001	THRUST BLOCK	1 of 1
45002	TYPICAL TRENCH DETAILS	1 of 1

Revision	Date	Description
0	OCT 2021	FOR TENDER PURPOSES ONLY

UNDERGROUND SERVICES CHECKED

SERVICE	DATE	SIGNATURE
S.W DRAINS		
SEWERS		
WATERMAINS		
G.P.O CABLES		
ELECTRIC CABLES		
S.A.R CABLES		
E.S.C CABLES		
OIL PIPE LINE		

NOTE: Only underground services affected by new construction are shown. Care must be taken during excavations for road foundations,trenches etc.,to avoid damage to underground services such as sewers,drains,cables, watermains and connections.Wherever possible these must be located before work begins.

Contract No. WS 7400

Project No. D732

Planning Unit EWS

Project Title

THANDOKUHLE RESERVOIR COMPARTMENT 1

CONSTRUCTION OF A 3ML REINFORCED CONCRETE RESERVOIR, 150mm Ø STEEL INLET, 300mm Ø STEEL OUTLET PIPELINES AND ASSOCIATED WORKS

Drawing Title

DN100 INLINE METER ASSEMBLY

Scales : As Shown | Original Paper : A1

Designed : D. Ramghulam | Date : May 2021

Checked : A. Goorun | Drawn : N. Adams

Area Engineer : Water Operations

Manager (W.D.)

Director (Water)

E.Msweli – Head: Water & Sanitation Unit

Drawing No. 60356/012 | Sheet 1 of 1 | Rev. 0

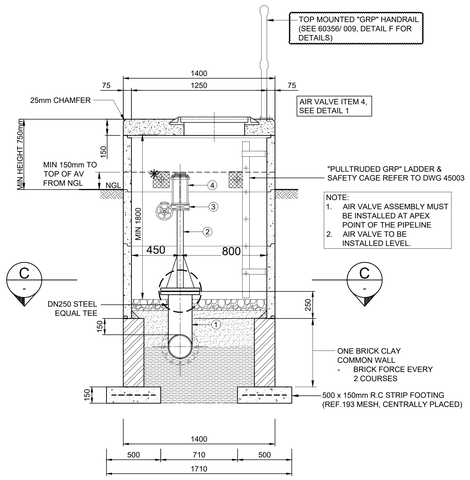

NOTE:
1. AIR VALVE ASSEMBLY MUST BE INSTALLED AT APEX POINT OF THE PIPELINE
2. AIR VALVE TO BE INSTALLED LEVEL.

* 4 No. x 75Ø HOLES EQUI-SPACED AROUND CIRCUMFERENCE OF TOP CHAMBER RING. FIX 150x150mm PIECES OF EXPANDED METAL MESH - 'VITEX' c/w INSECT MESH

TYPICAL AIR VALVE AND TEE TYPE

SECTION A
SCALE 1:20

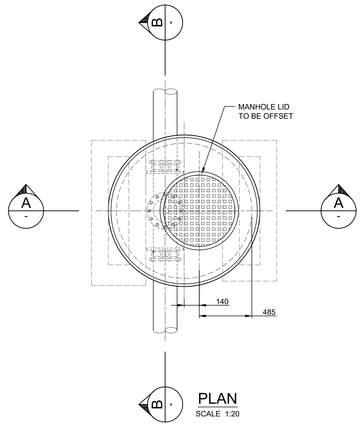

PLAN
SCALE 1:20

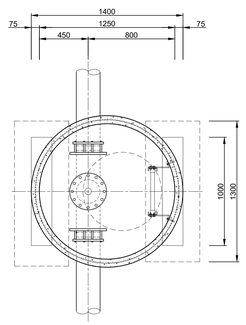

SECTION C
SCALE 1:20

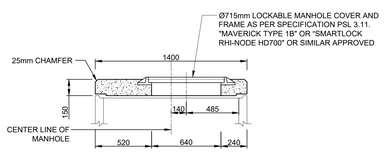

PRECAST MANHOLE LID SLAB DETAIL

SECTION A
SCALE 1:20

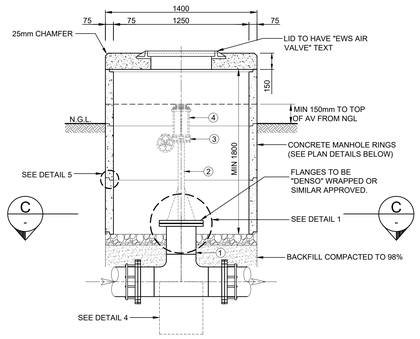

SECTION B
SCALE 1:20

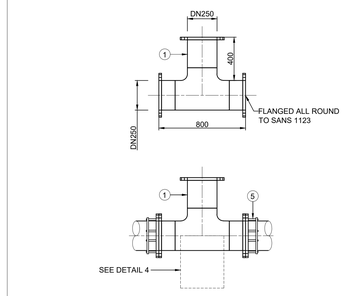

PLAN

DETAIL 2: EQUAL TEE DETAILS
SCALE 1:20

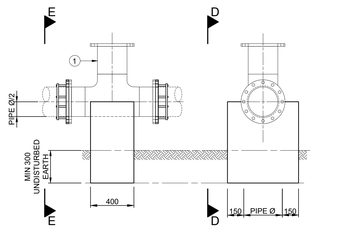

SECTION D-D SECTION E-E

DETAIL 4:
EQUAL TEE ANCHOR DETAIL
SCALE 1:20

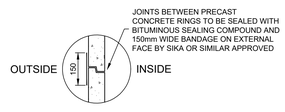

DETAIL 5:
JOINT DETAIL
SCALE 1 : 10

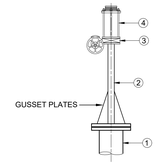

AIR VALVE ASSEMBLY DETAIL

DETAIL 1: AIR VALVE ASSEMBLY TYPE
SCALE 1:20

TEE

PIPEWORK AND FITTINGS SCHEDULE (REFER TO TABLE 1 FOR PRESSURE RATINGS)

ITEM NO	NOM DIA	DESCRIPTION	NO. OF
1	DN250	EQUAL TEE (ANSI B16.9) F.A.R. TO PROJECT SPECIFICATIONS SANS 1123, PRESSURE RATING AS PER TABLE 1	1
2	DN50	SPOOL PIECE, B.E.F WITH DN250 FLANGE ON ONE END AND DN50 FLANGE ON OTHER END. LENGTH TO SUIT SITE CONDITIONS (APPROX = 1000mm). 3*5mm THICK GUSSET PLATES (300mm HIGH x 85mm WIDE) TO BE WELDED TO BOTH PIPE AND DN250 FLANGE AT 120deg SPACES	1
3	DN50	EPOXY COATED AND LINED WAFER BUTTERFLY VALVE TO BS 5155/ EN593 AND EWS PARTICULAR SPECIFICATION COMPLETE WITH HAND WHEEL. REFER TO TABLE 1 FOR VALVE PRESSURE RATING.	1
4	DN50	"VARIANT MODEL LX" OR SIMILAR APPROVED DOUBLE ACTING ANTI-THEFT FLANGED AIR VALVE. BASE FLANGE TO 304 SS COMPLETE WITH INSULATING BOLT, WASHER AND NUT KIT FOR DISSIMILAR METALS BETWEEN FLANGES WITH A MINIMUM AIR INTAKE @ 3.5m VACUUM OF 190 l/s. NOTE: AIR VALVES TO BE ABLE TO BE MAINTAINED UNDER FULL PIPELINE WORKING PRESSURE WITHOUT THE NEED TO ISOLATE THE AIR VALVE.	1
5	DN250	FLANGE ADPATER TO SUIT. (KAMFLEX, VIKING JOHNSON OS SIMILAR APPROVED.	2

TABLE 1: AIR VALVE PRESSURE RATINGS

ITEM NO.	FITTING REF	SELECTED FITTING RATING (PN)	AIR VALVE ASSEMBLY SIZE	CHAINAGE (m)
1	AV 1	16	DN50	67.3
2	AV 2	16	DN50	191.66

TABLE 2:TOTAL AIR VALVE CHAMBER QUANTITIES

DN	PN	QUANTITIES
DN50	16	2
	TOTAL AIR VALVES	2

ADDITIONAL NOTES:

1. ALL SPECIALS TO BE COATED AND LINED TO PROJECT SPECIFICATIONS UNLESS OTHERWISE STATED.
2. ALL PIPES LESS THAN OR EQUAL TO DN150 TO BE FABRICATED IN ACCORDANCE WITH SANS 62 - 1 (MEDIUM CLASS).
3. ALL MILD STEEL PIPEWORK AND FITTINGS GREATER THAN DN150 TO BE FABRICATED IN ACCORDANCE TO API 5L GRADE X42 OR SANS 719 GRADE C. THICKNESS AS SHOWN.
4. ALL SPECIALS TO BE EPOXY COATED (S.F.E) TO PROJECT SPECIFICATIONS UNLESS OTHERWISE STATED. ALL PIPE TO BE TO SANS 719, GRADE X42, 4.5mm THICK.
5. DIMENSIONS OF ALL PIPES, FITTINGS AND SPECIALS SCHEDULED ABOVE ARE FOR INFORMATION PURPOSES ONLY AND TO BE VERIFIED ON SITE PRIOR TO MANUFACTURE.
6. ALL PIPEWORK, VALVES AND FITTING SHALL COMPLY WITH PROJECT SPECIFICATION.
7. PRESSURE RATINGS OF VALVES AND FITTINGS TO SUIT PRESSURE RATING INDICATED IN SCHEDULE.
8. THE USE OF PROPRIETARY NAMES IN NO WAY INDICATES PREFERENCE FOR A PARTICULAR PRODUCT. RATHER, THIS USAGE IS TO ILLUSTRATE TO THE TENDERER THE TYPE AND NATURE OF PRODUCT SOUGHT BY EWS. EQUIPMENT WITH SIMILAR MATERIALS OF CONSTRUCTIONS, SIMILAR FUNCTIONALITY AND NO MATERIAL DEVIATION FROM THE PRODUCT USED FOR ILLUSTRATIVE PURPOSES WILL BE DEEMED TO BE "SIMILAR APPROVED".
9. ALL RESTRAINED TYPE FITTINGS & COUPLINGS SHALL COMPLY TO PROJECT SPECIFICATIONS.

PIPEWORK NOTES:

1. ALL MATERIAL TO BE SANS APPROVED.
2. ALL FLANGES AND RESTRAINING FLANGES SHALL BE RATED AND DRILLED TO SANS 1123, TABLE AS SPECIFIED IN PIPEWORK AND FITTINGS SCHEDULE.
   2.1. THRUST PUDDLE FLANGES SHALL MATCH PIPEWORK FLANGES TO SANS 1123 AND SHALL BE UNDRILLED.
   2.2. WHERE PUDDLE PLATES ARE REQUIRED OVER THRUST PUDDLE FLANGES, THE THICKNESS AND OUTSIDE DIAMETER SHALL BE SPECIFIED IN PIPEWORK AND FITTINGS SCHEDULE.
3. ALL BOLTS AND TIE BOLTS TO BE GRADE 4.8. BOLTS, NUTS AND WASHERS SHALL BE HOT DIPPED GALVANISED TO SANS 121/ ISO 1461, WITH A HEAVY FILM THICKNESS OF 85 ±10 MICRON.
4. ALL MILD STEEL ITEMS (APART FROM PIPING/PIPE FITTINGS) TO BE HEAVY DUTY HOT DIPPED GALVANIZED TO ISO 1461 AND SANS 121,WITH A HEAVY FILM THICKNESS OF 85 ±10 MICRO INTERNALLY AND EXTERNALLY APPLIED.
5. ALL PIPE FITTINGS TO BE CHECKED ON SITE, ANY DISCREPANCIES TO BE REPORTED TO THE ENGINEER PRIOR TO MANUFACTURE.
6. ALL PIPES LESS THAN OR EQUAL TO DN150 TO BE FABRICATED IN ACCORDANCE WITH SANS 62 - 1 (MEDIUM CLASS) UNLESS OTHERWISE SPECIFIED.
7. ALL MILD STEEL PIPEWORK AND FITTINGS GREATER THAN DN150 TO BE FABRICATED IN ACCORDANCE WITH SANS 719 EDITION 3.1 2008 AND WELDED IN ACCORDANCE WITH API 1104. PIPEWORK GRADE AND WALL THICKNESS SHALL MATCH SCHEDULE OF FITTINGS TABLE.
8. ALL STAINLESS STEEL PIPE AND FITTINGS TO BE GRADE 316L AND WALL THICKNESS SHALL MATCH SCHEDULE OF FITTINGS TABLE.
9. ENSURE THERE IS AT LEAST 75mm COVER BETWEEN THE REINFORCING BARS AND PUDDLE FLANGE/ PLATE.
10. RESTRAINING FLANGE ADAPTOR USE MINIMUM 4 No GRADE 4.8 RESTRAINING BOLTS, EQUALLY SPACED AROUND CIRCUMFERENCE OF FLANGES UNLESS OTHER SHOWN UNDER ITEM DESCRIPTION. NOTE: ALL THE BOLTS FROM THE FLANGE ON THE VALVE ADJACENT TO A RESTRAINING FLANGE TO BE TAKEN THROUGH TO THE RESTRAINING FLANGE WITH NUTS AND WASHERS BOTH SIDES OF RESTRAINING FLANGE.
11. ALL BURIED FLANGES TO BE CATHODICALLY BONDED INSULATED CABLE THERMALLY WELDED TO PIPE AS DIRECTED BY CATHODIC SPECIALIST .

COATING AND LINING NOTES:

17. SURFACE PREPARATION - GRIT BLAST TO SIS 05 590, GRADE SA 2.5.
18. SFE LINING/COATING TO MILD STEEL PIPING GREATER THAN DN200 (UNLESS OTHERWISE STATED): TO EWS PARTICULAR SPECIFICATION FOR 164mm TO 2230mm DIAMETER STEEL PIPE,SPECIALS,COATINGS AND LININGS WITH A MINIMUM DFT OF 406micron, INTERNALLY AND EXTERNALLY APPLIED.
19. MILD STEEL PIPING LESS THAN OR EQUAL TO DN200 TO BE HEAVY DUTY HOT-DIPPED GALVANISED (UNLESS OTHERWISE STATED): TO ISO 1461 AND SANS 121, WITH A HEAVY FILM THICKNESS OF 85 ±10 MICRON, INTERNALLY AND EXTERNALLY APPLIED.
   19.1. PIPE BELOW GROUND, AFTER GALVANISING TO BE WRAPPED WITH 'DENSO ULTRAFLEX 1250 TAPE' OR SIMILAR APPROVED.
   19.2. PIPE ABOVE GROUND, AFTER GALVANISING TO BE WRAPPED WITH 'ACRYLIC PIPELINE TAPE' OR SIMILAR APPROVED.
20. CEMENT MORTAR LINING TO EWS SPECIFICATIONS - STEEL PIPE, LINING & COATING.
21. DAMAGED COATING AND LININGS TO BE REPAIRED IN ACCORDANCE WITH PROJECT SPECIFICATION
22. DAMAGED H.D.G. COATING TO BE REPAIRED WITH 'GALV-O-PATCH' OR SIMILAR APPROVED PRODUCT.
23. ALL BURIED FLANGES, BOLTS AND FLEXIBLE COUPLINGS TO BE WRAPPED WITH 'DENSO SYSTEM' OR SIMILAR APPROVED IN ACCORDANCE TO PROJECT SPECIFICATIONS.
24. ALL PIPEWORK THROUGH CHAMBER WALLS TO BE WRAPPED WITH 'DENSO ULTRAFLEX 1250 TAPE' OR SIMILAR APPROVED ON EACH SIDE OF THE PUDDLE FLANGE. THIS WRAPPING TO EXTEND 150mm BEYOND THE FACE OF THE WALL EACH SIDE. PUDDLE FLANGE/ PLATE NOT TO BE WRAPPED.

NB:

25. ALL CERTIFICATES SHALL BE PROVIDED FOR ALL MATERIALS
26. ALL WELDING TO BE API 1104.
27. ALL WELDS TO BE 100% TESTED.

"DENSO" OR SIMILAR APPROVED NOTES:

ALL BURIED FLANGES, BOLTS AND FLEXIBLE COUPLINGS TO BE WRAPPED WITH 'DENSO SYSTEM' OR SIMILAR APPROVED AS DESCRIBED BELOW:

1. "MASTIC" PROFILING PUTTY OR SIMILAR APPROVED

NARROW STRIPS CUT FROM "DENSO PROFILING PUTTY" OR SIMILAR APPROVED SHALL BE APPLIED TO THE JOINT TO ACHIEVE A SMOOTH PROFILE WITH A 50mm SPLAYED FILLET BEING FORMED AT THE JOINT/PIPE INTERFACE. CARE SHALL BE TAKEN, PARTICULARLY AT BOLTS, TO AVOID THE FORMATION OF AIR POCKETS. "DENSO PETROLATUM TAPE" OR SIMILAR APPROVED SHALL THEN BE APPLIED (MASTIC SIDE DOWN) TO THE JOINT UNTIL THE JOINT IS COMPLETELY ENVELOPED.

2. "DENSO" WRAPPING OR SIMILAR APPROVED.

THE ENDS OF THE BLANKET SHALL BE BOUND TO THE BARREL OF THE PIPE ON EACH END WITH 100mm WIDE "DENSO PETROLATUM TAPE" OR SIMILAR APPROVED. "DENSO PETROLATUM TAPE" OR SIMILAR APPROVED OVERLAPS SHALL BE 50mm AND SHALL EXTEND 100mm ONTO THE BLANKET AND 150mm ONTO THE PIPE BARREL. ALL EXPOSED BOLTS ON FLEXIBLE COUPLINGS AND FLANGES ADAPTORS TO BE WRAPPED.

3. FINAL POLYETHYLENE WRAPPING

THE ENTIRE JOINT SHALL BE WRAPPED WITH 350 MICRON POLYETHYLENE SHEETING WHICH SHALL END 400mm BEYOND THE JOINT. THE PROTECTIVE SHEETING SHALL BE SECURED TO THE PIPE BARREL AND ALONG THE SEAM WITH 50mm WIDE "DENSO ADHESIVE TAPE" OR SIMILAR APPROVED.

eTHEKWINI WATER SERVICES
WATER DESIGN BRANCH
eTHEKWINI

REDUCED PLAN USE SCALE BELOW
0 10 20 30 40 50 60 70
70mm ON ORIGINAL PLAN

CONSULTANT:

NAIDU CONSULTING
1st Floor
No.5 The Boulevard
West Way Office Park
Westville, Durban
Tel : +27 (0) 31 265 6007
Fax : +27 (0) 31 265 6011
E-mail : info@naiduconsulting.com

DRAWING No.: D732-52-5257

FOR TENDER

Ref Drg.	Description	
60356/002	RESERVOIR SITE PLAN LAYOUT	1 of 1
60356/009	STANDARD ASSOCIATED DETAILS	1 of 2
60356/009	STANDARD ASSOCIATED DETAILS	2 of 2
60356/010	INLET AND OUTLET PIPELINE PLAN AND LONG SECTIONS	1 of 1

Standard Drawings

45001	THRUST BLOCK	1 of 1
45002	TYPICAL TRENCH DETAILS	1 of 1
45005	GRP ACCESS LADDER: PLAN, SECTION & DETAILS	1 of 2
45005	GRP ACCESS LADDER: PLAN, SECTION & DETAILS	2 of 2
68184	WIRE MESH SECURITY FENCE & GATE	1 of 1

Revision	Date	Description
0	OCT 2021	FOR TENDER PURPOSES ONLY

NOTE: No construction work to commence until land and servitude acquisitions have been completed

Acquisitions completed:

Date Engineer NORTH POINT

UNDERGROUND SERVICES CHECKED –

SERVICE	DATE	SIGNATURE
S.W DRAINS		
SEWERS		
WATERMAINS		
TELKOM CABLES		
ELECTRIC CABLES		
S.A.R CABLES		
E.S.C CABLES		
OIL PIPE LINE		

NOTE: Only underground services affected by new construction are shown. Care must be taken during excavations for road foundations,trenches etc.to avoid damage to underground services such as sewers,drains,cables,watermains and connections.Wherever possible these must be located before work begins.

Contract No. WS 7400

Project No. D732

Planning Unit EWS

Project Title
THANDOKUHLE RESERVOIR COMPARTMENT 1
CONSTRUCTION OF A 3ML REINFORCED CONCRETE RESERVOIR, 150mm Ø STEEL INLET, 300mm Ø STEEL OUTLET PIPELINES AND ASSOCIATED WORKS

Drawing Title
TYPICAL AIR VALVE DETAILS

Scales : As Shown
Original paper size : A0
Designed : D. Ramghulam
Date : May 2021
Checked : A. Goorun
Drawn : N. Adams

Area Engineer (W.O.)

Manager (W.D.)

Director (Water)

E.Maweli – Head: Water & Sanitation Unit

Drawing No. 60356/013 Sheet 1 of 1 Rev. 0

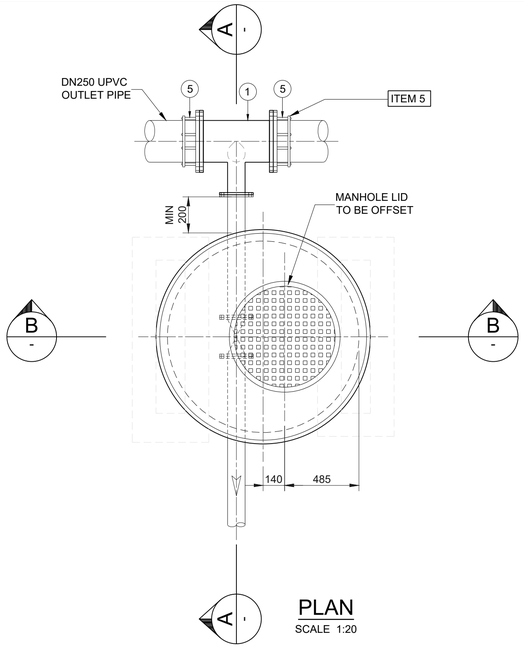

PLAN
SCALE 1:20

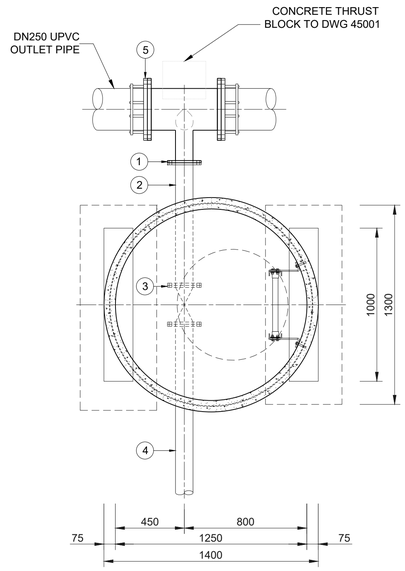

SECTION C
SCALE 1:20

TYPICAL SCOUR PIPEWORK SCHEDULE : PN16 (TABLE 2)		
ITEM	DESCRIPTION	QTY
1	SCOUR TEE F.A.R. TO TABLE 1. TO ANSI B16.9 (REFER TO TABLE 1 FOR DN)	1
2	SPOOL PIECE F.B.E., DN TO TABLE 1. MINIMUM F/F = 800mm, FINAL LENGTH TO BE DETERMINED ON SITE, ONE FLANGE TO MATCH ITEM 3, PN16.	1
3	PN16 SANS 664 WEDGE GATE VALVE WITH CAP TOP, DN TO TABLE 1 COMPLETE WITH MATCHING FLANGES, NUTS, BOLTS, WASHERS & GASKETS.	1
4	SPOOL PIECE F.O.E., DN TO TABLE 1. MINIMUM F/F = 1100mm, FINAL LENGTH TO BE DETERMINED ON SITE, FLANGE TO MATCH ITEM 3, PN16.	1
5	FLANGE ADAPTER TO SUIT	2

ABBREVIATIONS :

DN - DIAMETER NOMINAL
OD - OUTSIDE DIAMETER
ID - INSIDE DIAMETER
M.S - MILD STEEL
S.S - STAINLESS STEEL
H.D.G.M.S - HOT DIPPED GALVANISED MILD STEEL
G.M.S - GALVANISED MILD STEEL
C.I - CAST IRON
F.R.L. - FINAL ROAD LEVEL

F.O.E - FLANGED ONE END
F.B.E - FLANGED BOTH ENDS
F.A.R - FLANGED ALL ROUND
F/F - FACE TO FACE DIMENSION
C/F - CENTRE TO FACE DIMENSION
L.R.B - LONG RADIUS BEND
S.R.B - SHORT RADIUS BEND

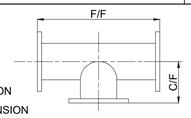

TABLE 1: SCOUR TEE FABRICATION DETAILS	
DESCRIPTION	DN
MAIN PIPE	250
BRANCH PIPE	100

PRECAST CHAMBER INSTALLATION NOTES

1. DRY WELL CHAMBER TO BE PLACED ON THE VERGE & NOT ON THE ROAD AND TO BE CONFIRMED BY ENGINEER ON SITE.
2. DRY WELL CHAMBER POSITION TO BE CONFIRMED ON SITE PRIOR TO INSTALLATION.

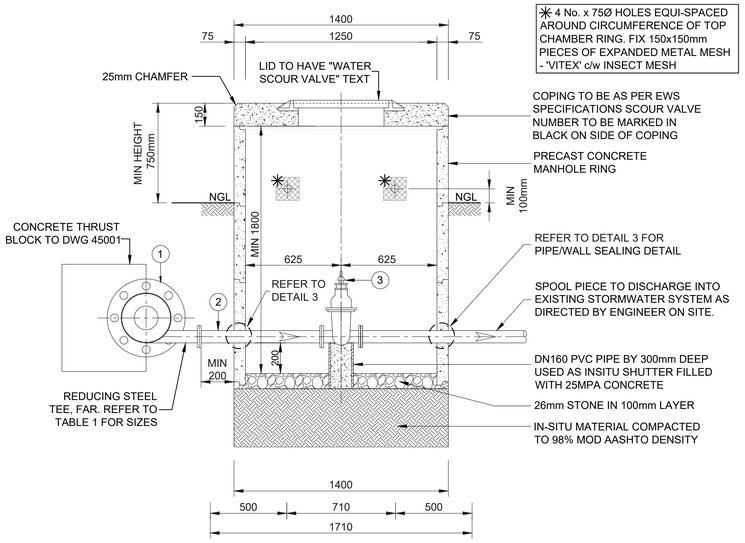

TYPICAL SCOUR VALVE AND TEE TYPE

SECTION A
SCALE 1:20

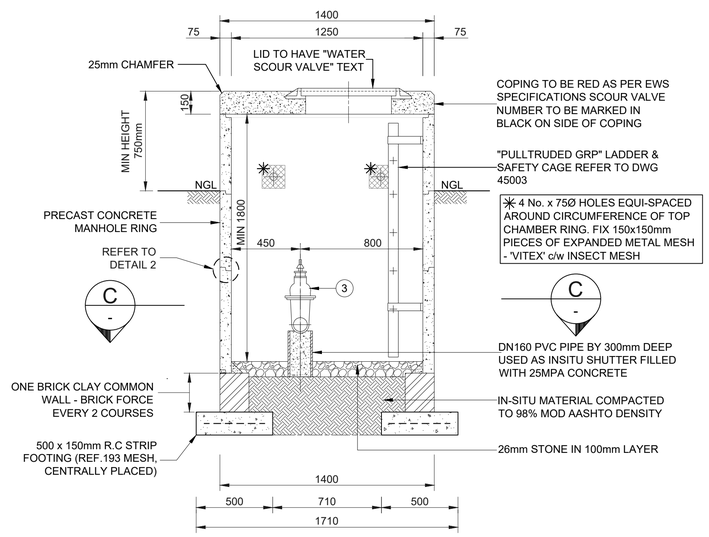

SECTION B
SCALE 1:20

PIPEWORK NOTES

1. ALL STEEL PIPES & FITTINGS 150 NB AND SMALLER TO BE MEDIUM DUTY TO SABS 62 UNLESS OTHERWISE SPECIFIED.
2. ALL STEEL PIPES & FITTINGS LARGER THAN 150 NB TO BE min 4.5mm WALL THICKNESS TO SABS 719 UNLESS OTHERWISE SPECIFIED.
3. ALL FLANGES & STEEL PIPEWORK TO SANS 1123 TABLE 1600 (UNLESS OTHERWISE SPECIFIED)
4. CONTRACTOR TO CHECK AND CONFIRM DIMENSIONS OF PIPEWORK AND FLANGE DRILLING OF EXISTING PIPE WORK BEFORE THE FABRICATION OF PIPEWORK.
5. IF FACE TO FACE OF FITTINGS SHOWN DIFFERS TO ACTUAL THE CONTRACTOR MUST INFORM ENGINEER PRIOR TO PIPE FABRICATION/ INSTALLATION.
6. ALL STEEL AND SPECIALS TO BE FACTORY COATED AND LINED WITH COPON HYCOTE 162 OR SIMILAR APPROVED TO A TOTAL MINIMUM DRY FILM THICKNESS OF 300 MICRONS.
7. WHERE FABRICATION AND OR CUTTING ON SITE IS NECESSARY, THE COATING SHALL BE MADE GOOD WITH COPON HYCOTE 162 OR SIMILAR APPROVED EPOXY COATING.
8. ALL THREADS TO BE BRITISH STANDARD PIPE (BSP) THREADS. THREADS TO BE PROTECTED WITH STAG.
9. ALL STEEL COMPONENTS, BOLTS, NUTS & WASHERS TO BE HOT DIP GALVANISED TO ISO 1461 : 2009
10. ALL PIPEWORK PASSING THROUGH BRICKWORK/ MORTAR TO BE WRAPPED IN "DENSO" ULTRAFLEX 1250 WHERE IN CONTACT WITH BRICKWORK / MORTAR.
11. ALL BURIED FITTINGS AND PIPES TO BE PROTECTED BY "DENSO" IN ACCORDANCE WITH PROJECT SPECIFICATIONS.
12. WHERE DRY WELL CHAMBER IS SUBJECT TO TRAFFIC LOADING, OR IMPACTED BY TRAFFIC, COVER TO BE HEAVY DUTY AND FLUSH WITH FINISH ROAD LEVEL.

JOINTS BETWEEN PRECAST CONCRETE RINGS TO BE SEALED WITH BITUMINOUS SEALING COMPOUND AND 150mm WIDE BANDAGE ON EXTERNAL FACE BY SIKA OR SIMILAR APPROVED

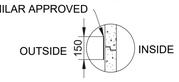

DETAIL 2:
JOINT DETAIL
SCALE 1 : 10

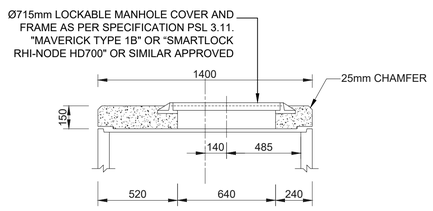

PRECAST MANHOLE LID SLAB DETAIL

SECTION B
SCALE 1:20

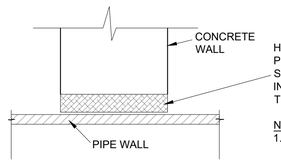

HIGH DENSITY, CROSS-LINKED, CLOSED CELL, EXPANDED POLYETHYLENE JOINT FORMER (SONDOR "JOINTEX" OR SIMILAR APPROVED) 20mm THICK FOR PIPES UP TO AND INCLUDING DN1000 AND 25mm THICK FOR PIPES GREATER THAN DN1000.

NOTE:
1. WIDTH TO SUIT CONCRETE WALL PLUS 20mm ON EITHER SIDE (EXCESS FOAM TO REMAIN IN PLACE UNTIL SHUTTERS HAVE BEEN REMOVED)
2. EXCESS FOAM TRIMMED FLUSH WITH THE CHAMBER WALLS USING A ROUND TIPPED KNIFE.

PIPE/WALL SEALING DETAIL
DETAIL 3
N.T.S

eTHEKWINI WATER SERVICES
WATER DESIGN BRANCH
eTHEKWINI

REDUCED PLAN USE SCALE BELOW
0 10 20 30 40 50 60 70
70mm ON ORIGINAL PLAN

CONSULTANT:

NAIDU CONSULTING

1st Floor
No.5 The Boulevard
West Way Office Park
Westville, Durban
Tel : +27 (0) 31 265 6007
Fax : +27 (0) 31 265 6011
E-mail : info@naiduconsulting.com

DRAWING No.: D732-52-5258

FOR TENDER

Ref Drg.	Description	
60356/002	RESERVOIR SITE PLAN LAYOUT	1 of 1
60356/009	STANDARD ASSOCIATED DETAILS	1 of 2
60356/009	STANDARD ASSOCIATED DETAILS	2 of 2
60356/010	INLET AND OUTLET PIPELINE PLAN AND LONG SECTIONS	1 of 1

Standard Drawings

45001	THRUST BLOCK	1 of 1
45002	TYPICAL TRENCH DETAILS	1 of 1
45005	GRP ACCESS LADDER: PLAN, SECTION & DETAILS	1 of 2
45005	GRP ACCESS LADDER: PLAN, SECTION & DETAILS	2 of 2
68184	WIRE MESH SECURITY FENCE & GATE	1 of 1

Revision	Date	Description
0	OCT. 2021	FOR TENDER PURPOSES ONLY

NC Project No. D732

Contract No. WS 7400

Planning Unit EWS

Project Title

THANDOKUHLE RESERVOIR COMPARTMENT 1
CONSTRUCTION OF A 3ML REINFORCED CONCRETE RESERVOIR, 150mm Ø STEEL INLET, 300mm Ø STEEL OUTLET PIPELINES AND ASSOCIATED WORKS

Drawing Title

TYPICAL SCOUR VALVE DETAILS

Scales : As Shown
Original Paper : A1
Designed : D. Ramghulam
Date : May 2021
Checked : A. Goorun
Drawn : N. Adams

Area Engineer : Water Operations

Manager (W.D.)

Director (Water)

Executive Director

Drawing No. 60356/014
Sheet 1 of 1
Rev. 0

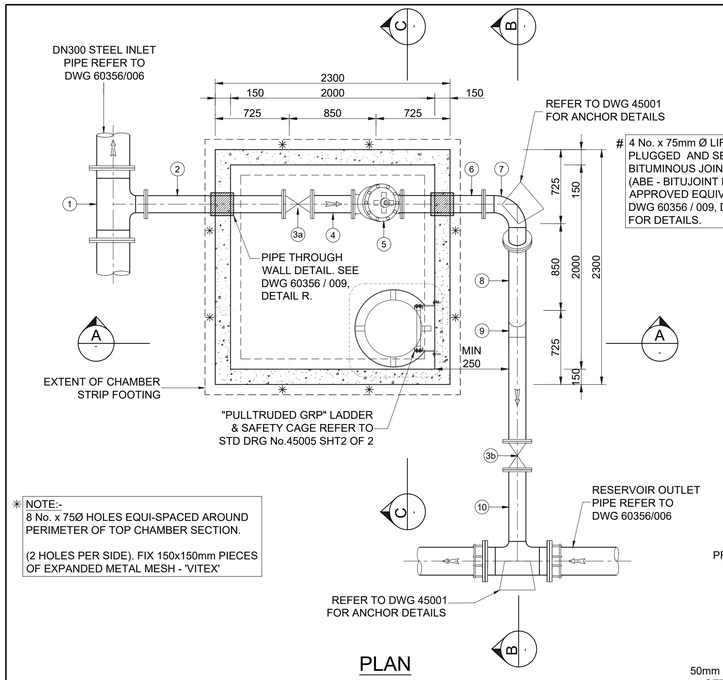

NOTE:-
8 No. x 75Ø HOLES EQUI-SPACED AROUND PERIMETER OF TOP CHAMBER SECTION.

(2 HOLES PER SIDE). FIX 150x150mm PIECES OF EXPANDED METAL MESH - 'VITEX'

PLAN
SCALE 1:30

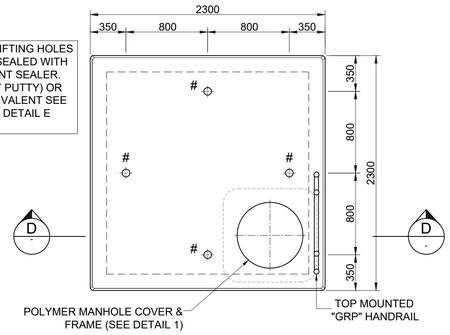

CHAMBER PRECAST MANHOLE ROOF SLAB PLAN
SCALE 1:30

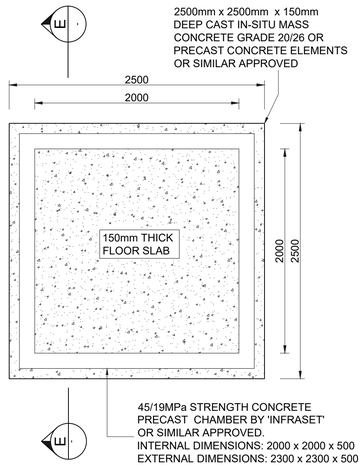

FLOOR SLAB PLAN
SCALE 1:30

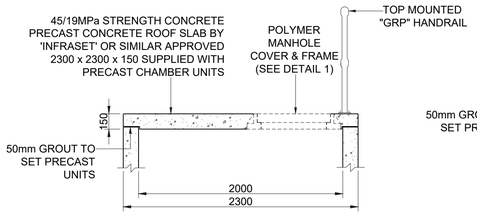

SECTION D
SCALE 1:30

CHAMBER PRECAST MANHOLE DETAIL

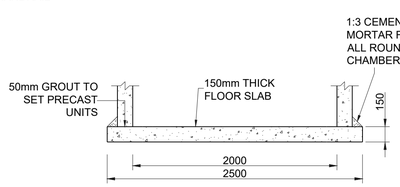

SECTION E
SCALE 1:30

FLOOR SLAB DETAIL

NOTE:-
MANHOLE ACCESS LID AND FRAME TO BE CAST INTO THE COVER SLAB AT TIME OF MANUFACTURE - THESE ITEMS SHALL NOT BE INSERTED SUBSEQUENT TO THE MANUFACTURE OF THE COVER SLAB.

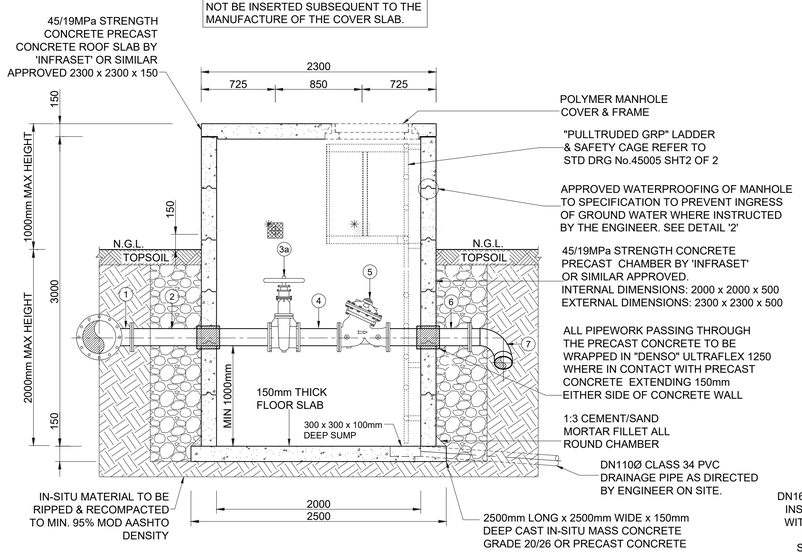

SECTION A
SCALE 1:30

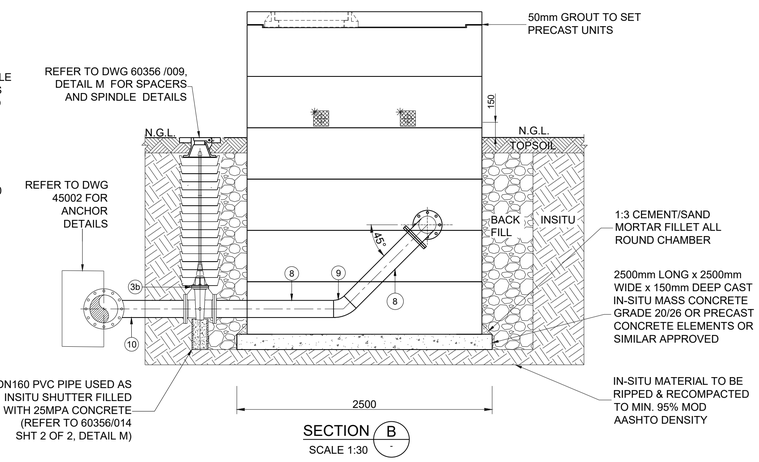

SECTION B
SCALE 1:30

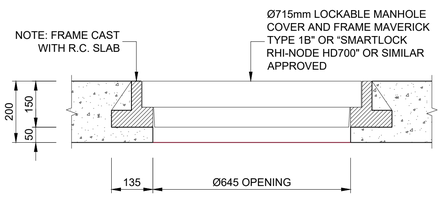

MANHOLE COVER DETAIL 1
SCALE 1 : 10

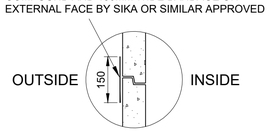

DETAIL 2: JOINT DETAIL
SCALE 1 : 10

ABBREVIATIONS :

DN - DIAMETER NOMINAL	F.O.E - FLANGED ONE END
OD - OUTSIDE DIAMETER	F.B.E - FLANGED BOTH ENDS
ID - INSIDE DIAMETER	F.A.R - FLANGED ALL ROUND
M.S - MILD STEEL	F/F - FACE TO FACE DIMENSION
S.S - STAINLESS STEEL	C/F - CENTRE TO FACE DIMENSION
H.D.G.M.S - HOT DIPPED GALVANISED MILD STEEL	L.R.B - LONG RADIUS BEND
G.M.S - GALVANISED MILD STEEL	S.R.B - SHORT RADIUS BEND
C.I - CAST IRON	P.C. - PLAIN END COATED
F.R.L. - FINAL ROAD LEVEL	P.E. - PLAIN END (FOR WELDING)

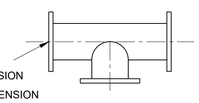

PIPEWORK NOTES:

1. ALL MATERIAL TO BE SANS APPROVED.
2. ALL FLANGES AND RESTRAINING FLANGES SHALL BE RATED AND DRILLED TO SANS 1123, TABLE AS SPECIFIED IN PIPEWORK AND FITTINGS SCHEDULE.
3. ALL BOLTS AND TIE BOLTS TO BE GRADE 4.8. BOLTS, NUTS AND WASHERS SHALL BE HOT DIPPED GALVANISED TO SANS 121/ ISO 1461, WITH A HEAVY FILM THICKNESS OF 85 ±10 MICRON.
4. ALL MILD STEEL ITEMS (APART FROM PIPING/PIPE FITTINGS) TO BE HEAVY DUTY HOT DIPPED GALVANIZED TO ISO 1461 AND SANS 121,WITH A HEAVY FILM THICKNESS OF 85 ±10 MICRO INTERNALLY AND EXTERNALLY APPLIED.
5. ALL PIPE FITTINGS TO BE CHECKED ON SITE, ANY DISCREPANCIES TO BE REPORTED TO THE ENGINEER PRIOR TO MANUFACTURE.
6. ALL PIPES LESS THAN OR EQUAL TO DN150 TO BE FABRICATED IN ACCORDANCE WITH SANS 62 - 1 (MEDIUM CLASS) UNLESS OTHERWISE SPECIFIED.
7. ALL MILD STEEL PIPEWORK AND FITTINGS GREATER THAN DN150 TO BE FABRICATED IN ACCORDANCE WITH SANS 719 EDITION 3.1 2008 AND WELDED IN ACCORDANCE WITH API 1104. PIPEWORK GRADE AND WALL THICKNESS SHALL MATCH SCHEDULE OF FITTINGS TABLE.
8. ALL STAINLESS STEEL PIPE AND FITTINGS TO BE GRADE 316L AND WALL THICKNESS SHALL MATCH SCHEDULE OF FITTINGS TABLE.
9. ENSURE THERE IS AT LEAST 75mm COVER BETWEEN THE REINFORCING BARS AND PUDDLE FLANGE/ PLATE.
10. RESTRAINING FLANGE ADAPTOR USE MINIMUM 4. No GRADE 4.8 RESTRAINING BOLTS, EQUALLY SPACED AROUND CIRCUMFERENCE OF FLANGES UNLESS OTHER SHOWN UNDER ITEM DESCRIPTION. NOTE: ALL THE BOLTS FROM THE FLANGE ON THE VALVE ADJACENT TO A RESTRAINING FLANGE TO BE TAKEN THROUGH TO THE RESTRAINING FLANGE WITH NUTS AND WASHERS BOTH SIDES OF RESTRAINING FLANGE.
11. ALL BURIED FLANGES TO BE CATHODICALLY BONDED INSULATED CABLE THERMALLY WELDED TO PIPE AS DIRECTED BY CATHODIC SPECIALIST .

COATING AND LINING NOTES:

17. SURFACE PREPARATION - GRIT BLAST TO SIS 05 590, GRADE SA 2.5.
18. SFE LINING/COATING TO MILD STEEL PIPING GREATER THAN DN200 (UNLESS OTHERWISE STATED): TO ETHEKWINI WATER (EWS) PARTICULAR SPECIFICATION FOR 164mm TO 2230mm DIAMETER STEEL PIPE,SPECIALS,COATINGS AND LININGS WITH A MINIMUM DFT OF 406micron, INTERNALLY AND EXTERNALLY APPLIED.
19. MILD STEEL PIPING LESS THAN OR EQUAL TO DN200 TO BE HEAVY DUTY HOT-DIPPED GALVANISED (UNLESS OTHERWISE STATED): TO ISO 1461 AND SANS 121, WITH A HEAVY FILM THICKNESS OF 85 ±10 MICRON, INTERNALLY AND EXTERNALLY APPLIED.
   - 19.1. PIPE BELOW GROUND, AFTER GALVANISING TO BE WRAPPED WITH 'DENSO ULTRAFLEX 1250 TAPE' OR SIMILAR APPROVED.
   - 19.2. PIPE ABOVE GROUND, AFTER GALVANISING TO BE WRAPPED WITH 'ACRYLIC PIPELINE TAPE' OR SIMILAR APPROVED.
20. CEMENT MORTAR LINING TO ETHEKWINI WATER (EWS) SPECIFICATIONS - STEEL PIPE, LINING & COATING.
21. DAMAGED COATING AND LININGS TO BE REPAIRED IN ACCORDANCE WITH PROJECT SPECIFICATION
22. DAMAGED H.D.G. COATING TO BE REPAIRED WITH 'GALV-O-PATCH' OR SIMILAR APPROVED PRODUCT.
23. ALL BURIED FLANGES, BOLTS AND FLEXIBLE COUPLINGS TO BE WRAPPED WITH 'DENSO SYSTEM' OR SIMILAR APPROVED IN ACCORDANCE TO PROJECT SPECIFICATIONS.
24. ALL PIPEWORK THROUGH CHAMBER WALLS TO BE WRAPPED WITH 'DENSO ULTRAFLEX 1250 TAPE' OR SIMILAR APPROVED ON EACH SIDE OF THE PUDDLE FLANGE. THIS WRAPPING TO EXTEND 150mm BEYOND THE FACE OF THE WALL EACH SIDE. PUDDLE FLANGE/ PLATE NOT TO BE WRAPPED.

NB:

25. ALL CERTIFICATES SHALL BE PROVIDED FOR ALL MATERIALS
26. ALL WELDING TO BE API 1104.
27. ALL WELDS TO BE 100% TESTED.

CONCRETE AND GENERAL NOTES

A. ENGINEER TO INSPECT AND APPROVE FOUNDING MATERIAL BEFORE BLINDING IS CAST
B. ALL EXPOSED EDGES ARE CHAMFERED 25x25.
C. GENERAL COVER TO ALL REINFORCING IS 50mm.
D. ENSURE THERE IS AT LEAST 75mm COVER BETWEEN THE REINFORCING BARS AND PUDDLE FLANGE
E. CONSTRUCTION JOINTS ARE WELL CLEANED & SCABBLED TO EXPOSE FRESH AGGREGATE AND THOROUGHLY WETTED BEFORE THE NEXT LIFT IS POURED. CONSTRUCTION JOINTS TO HAVE SIKASWELL S-2 OR SIMILAR APPROVED BEAD CENTRALLY PLACED.
F. CONCRETE DISTANCE BLOCKS FOR POSITIONING REINFORCEMENT NEED TO BE MADE AT LEAST 3 WEEKS PRIOR TO REINFORCEMENT BEING FIXED, IN ORDER TO ALLOW FOR SUFFICIENT MOIST-CURING TIME.
G. NO ACCESS OPENINGS OTHER THAN THOSE INDICATED ON DRAWINGS WILL BE ALLOWED.
H. NO WIRE TIES BETWEEN WALL SHUTTERS WILL BE PERMITTED. FERRULE HOLES TO BE FREE OF FORMERS WITHIN 40mm OF SHUTTER.
I. WORKING SPACE AROUND THE CHAMBER NOT TO EXCEED 1000mm.
J. REINFORCED CONCRETE SHALL BE WATERTIGHT TO SABS 1200G 5.5.11
K. CONCRETE GRADE

BLINDING	:15/19
MASS CONCRETE	:20/19
CONCRETE	:25/19 UNLESS OTHERWISE STATED
SCREED	:1:3 (CEMENT/SAND)

L. WHERE APPLICABLE, AIR VENTS, LIFTING HOLES, LIFTING HOOKS, STEP IRONS AND DI COVER & FRAME WERE PRE- INSTALLED AT THE MANUFACTURER PRIOR TO DELIVERY ON SITE.
M. BACKFILL MATERIAL AROUND STRUCTURE TO BE COMPACTED TO MINIMUM 95% MODIFIED AASHTO MAXIMUM DENSITY IN MAXIMUM 150mm LAYERS.
N. ON COMPLETION OF THE CHAMBERS, PAINT ALL EXPOSED ABOVE GROUND CHAMBER WALLS AND ROOF SLABS WITH 2 COATS OF WHITE ROAD MARKING PAINT. THEREAFTER, STENCIL ON THE CHAMBER IDENTIFICATION NUMBER TO BE ADVISED BY THE ENGINEER.
O. SIGNAGE INSTRUCTIONS FOR USE 800 x 600 HEAVY DUTY PVC SIGN BOARD FIXED TO THE INSIDE OF THE CHAMBER AS PER THE ENGINEERS INSTRUCTIONS

FINISHING NOTES

P. FORMED CONCRETE SURFACES FINISHES
   - P.1. HIDDEN SURFACES ARE EXTERNAL SURFACES BURIED, ALL OTHER SURFACES INCLUDING INSIDE OF THE CHAMBER TO BE EXPOSED SURFACES

VISIBLE SURFACES	:SMOOTH
CONCEALED SURFACES	:ROUGH

Q. UNFORMED CONCRETE SURFACES FINISHES

TOP OF BLINDING	:WOOD FLOAT
TOP OF FLOOR	:STEEL FLOAT
TOP OF SLABS	:STEEL FLOAT

PIPEWORK AND FITTINGS SCHEDULE

ITEM NO	NOM DIA	DESCRIPTION	DIMENSIONS (mm) A	B	C	F/F	No. OF
		STAGE 1: TEMPORARY PIPEWORK					
1	DN300 x DN150	REDUCING TEE (ANSI B16.9) FITTED WITH 100mm SPOOL PIPE AT EACH END. (FLANGED ALL ROUND)	700	320	355	700	1
2	DN150	SPOOL PIPE,BOTH ENDS FLANGE.				1350	1
3a	DN150	RESILIENT SEAL GATE VALVE TO SANS 664, COMPLETE WITH HAND WHEEL, NUTS BOLTS, WASHERS & GASKETS,				280	1
3b	DN150	RESILIENT SEAL GATE VALVE TO SANS 664, COMPLETE WITH SPINDLE, NUTS BOLTS, WASHERS & GASKETS,				280	1
4	DN150	SPOOL PIECE, FLANGED BOTH ENDS				400	1
5	DN150	"BERMAD" PRESSURE CONTROL VALVE. VALVE TO BE ES TYPE COMPLETE WITH V-PORT, NUTS, BOLTS, WASHERS AND GASKETS OR SIMILAR APPROVED.				480	1
6	DN150	SPOOL PIPE,BOTH ENDS FLANGE.				500	1
7	DN150	90 deg LONG RADIUS BEND FITTED WITH 100mm SPOOL PIECE ON BOTH ENDS. BOTH ENDS FLANGED. BEND ROTATED AT 45 deg ANGLE				800	1
8	DN150	SPOOL PIECE, F.O.E , OTHER END PLAIN ENDED FOR WELDING. (FINAL LENGTH TO BE CONFIRMED ON SITE)				1000	2
9	DN150	45 deg LONG RADIUS BEND (ANSI 16.9). WELD ITEM 8 ON EACH END					1
10	DN250 x DN150	REDUCING TEE (ANSI B16.9) FITTED WITH DN250 x 100mm LONG SPOOL PIPE. (FLANGED ALL ROUND)	630	800	316		1
11	DN250	FLANGE ADAPTOR (KAMFLEX,VIKING JOHNSON) OR SIMILAR APPROVED TO SUIT					2

eTHEKWINI WATER SERVICES
WATER DESIGN BRANCH eTHEKWINI

REDUCED PLAN USE SCALE BELOW
0 10 20 30 40 50 60 70
70mm ON ORIGINAL PLAN

CONSULTANT:
NAIDU CONSULTING

1st Floor, No.5 The Boulevard, West Way Office Park, Westville, Durban
Tel : +27 (0) 31 265 6007
Fax : +27 (0) 31 265 6011
E-mail : info@naiduconsulting.com

DRAWING No. D732-52-5259

FOR TENDER

Ref Drg.	Description	
60356/002	RESERVOIR SITE PLAN LAYOUT	1 of 1
60356/009	STANDARD ASSOCIATED DETAILS	1 of 2
60356/009	STANDARD ASSOCIATED DETAILS	2 of 2
60356/010	INLET AND OUTLET PIPELINE PLAN AND LONG SECTIONS	1 of 1

Standard Drawings

45001	THRUST BLOCK	1 of 1
45002	TYPICAL TRENCH DETAILS	1 of 1

Revision	Date	Description
0	OCT 2021	FOR TENDER PURPOSES ONLY

UNDERGROUND SERVICES CHECKED

SERVICE	DATE	SIGNATURE
S.W DRAINS		
SEWERS		
WATERMAINS		
G.P.O CABLES		
ELECTRIC CABLES		
S.A.R CABLES		
E.S.C CABLES		
OIL PIPE LINE		

NOTE: Only underground services affected by new construction are shown. Care must be taken during excavations for road foundations,trenches etc.to avoid damage to underground services such as sewers,drains,cables, watermains and connections.Wherever possible these must be located before work begins.

Contract No. WS 7400

Project No. D732

Project Title
THANDOKUHLE RESERVOIR COMPARTMENT 1
CONSTRUCTION OF A 3ML REINFORCED CONCRETE RESERVOIR, 150mm Ø STEEL INLET, 300mm Ø STEEL OUTLET PIPELINES AND ASSOCIATED WORKS

Drawing Title
DN150 CROSS CONNECTION CHAMBER

Scales : As Shown | Original Paper : A1
Designed :D. Ramghulam | Date : May 2021
Checked : A. Goorun | Drawn : B.Mhlungu

Area Engineer : Water Operations

Manager (W.D.)

Director (Water)

E.Msweli – Head: Water & Sanitation Unit

Drawing No. 60356/015 | Sheet 1 of 1 | Rev. 0

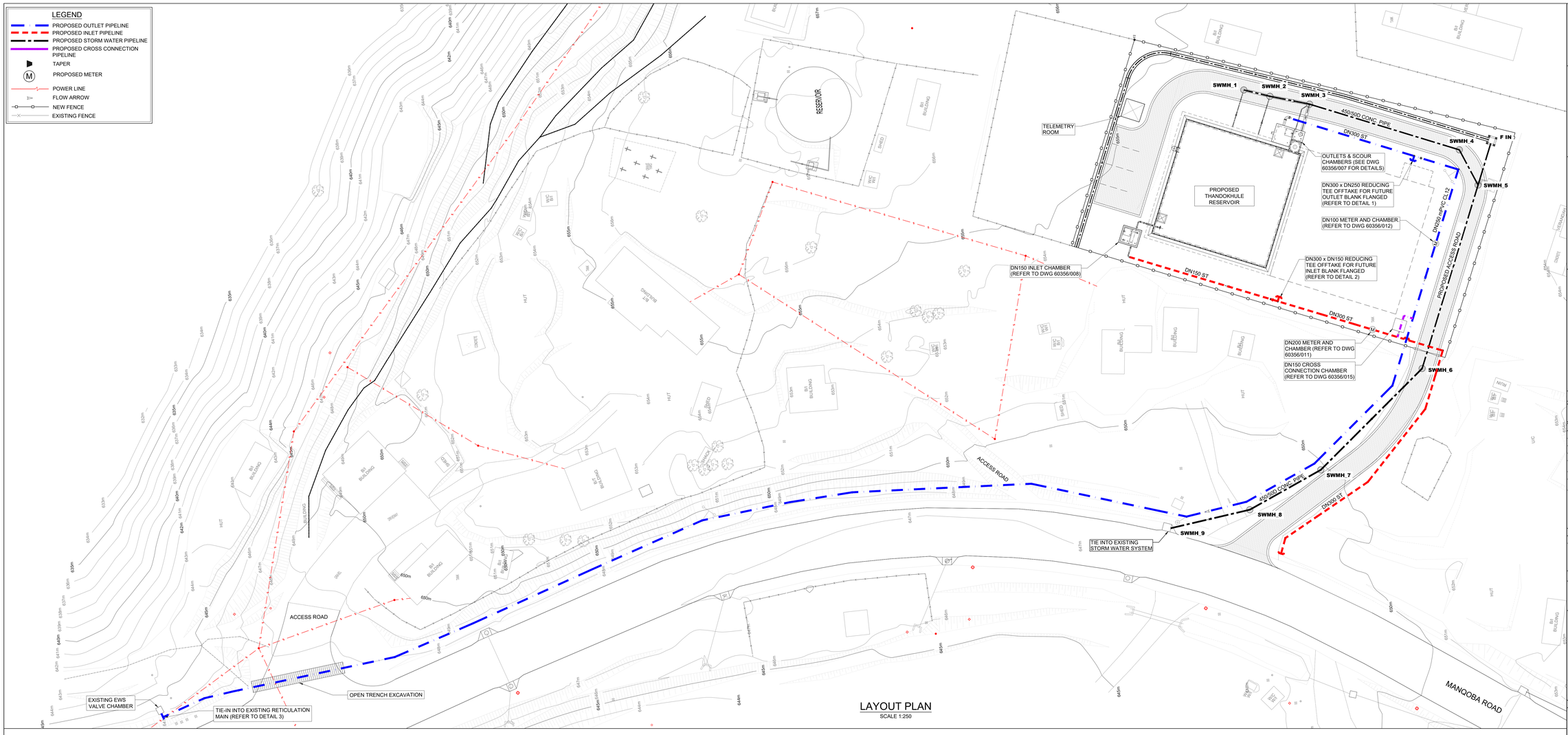

LAYOUT PLAN

SCALE 1:250

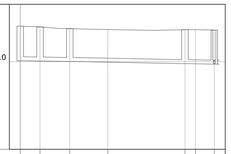

PEG DISTANCE (m)	0.00	4.51	11.30	20.00	37.58	40.00	44.28
GROUND LEVEL (m)	654.04	653.96	653.76	653.66	653.64	653.64	653.60
INVERT LEVEL (m)	650.10	650.07	650.02	649.93	649.77	649.75	649.72
DEPTH TO IL (m)	3.94	3.89	3.74	3.72	3.87	3.89	3.88
GRADE (1:_)	100.01	100.00	100.00			100.00	
PIPE DISCRIPTION	450mm dia./Class50D - CONCRETE PIPE						
REFERENCE	SVMH_1	SVMH_2	SVMH_3		SVMH_4	SVMH_5	

SETTING OUT DATA		
REF	Y	X
SWMH_1	23 140.975	3 284 305.322
SWMH_2	23 142.422	3 284 309.590
SWMH_3	23 144.314	3 284 316.115
SWMH_4	23 154.140	3 284 340.498
SWMH_5	23 160.299	3 284 343.124

STORM WATER LS 1 PIPELINE LONGITUDINAL SECTION

SCALE : Vert 1 :250
Hor 1 :500

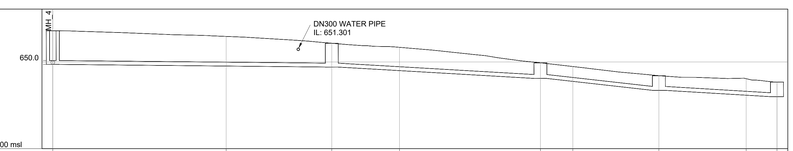

PEG DISTANCE (m)	0.00	20.00	32.19	40.00	56.26	60.00	69.93	80.00	83.55		
GROUND LEVEL (m)	653.60	652.95	652.16	651.69	649.90	649.47	648.42	648.07	647.69		
INVERT LEVEL (m)	649.72	649.53	649.41	649.98	648.10	647.72	646.73	646.18	645.99		
DEPTH TO IL (m)	3.88	3.42	2.75	2.70	1.80	1.75	1.69	1.89	1.69		
GRADE (1:_)	99.92		17.23			8.86		16.54			
PIPE DISCRIPTION	450mm dia./Class50D - CONCRETE PIPE										
REFERENCE	SVMH_5		SVMH_6		SVMH_7		SVMH_8		SW_IN		

SETTING OUT DATA		
REF	Y	X
SWMH_5	23 160.299	3 284 343.124
SWMH_6	23 190.154	3 284 331.087
SWMH_7	23 205.626	3 284 312.650
SWMH_8	23 211.253	3 284 300.192
SW_IN	23 213.189	3 284 286.705

STORM WATER LS 2 PIPELINE LONGITUDINAL SECTION

SCALE : Vert 1 :250
Hor 1 :500

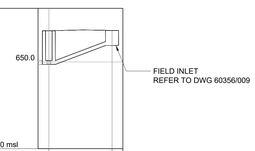

PEG DISTANCE (m)	0.00	7.29	
GROUND LEVEL (m)	653.60	653.63	
INVERT LEVEL (m)	649.72 649.72	651.90	
DEPTH TO IL (m)	3.88 3.88	1.73	
GRADE (1:_)	-2.65		
PIPE DISCRIPTION	DN450 CONCRETE		
REFERENCE	SVMH_5	F_IN	

SETTING OUT DATA		
REF	Y	X
SWMH_5	23 160.299	3 284 343.124
F_IN	23 153.536	3 284 345.848

STORM WATER LS 3 PIPELINE LONGITUDINAL SECTION

SCALE : Vert 1 :250
Hor 1 :500

eTHEKWINI WATER SERVICES

WATER DESIGN BRANCH

eTHEKWINI

REDUCED PLAN USE SCALE BELOW

0 10 20 30 40 50 60 70

70mm ON ORIGINAL PLAN

LEGEND

EXISTING UNDERGROUND SERVICES ARE AS SHOWN BELOW.

SEWERS AND M.H'S
STORM WATER DRAINS AND M.H'S
WATER MAINS AND VALVES
ELECTRICITY CABLES
TELKOM CABLES
OIL PIPELINES

CONSULTANT:

NAIDU CONSULTING

1st Floor
No.5 The Boulevard
West Way Office Park
Westville, Durban

Tel : +27 (0) 31 265 6007
Fax : +27 (0) 31 265 6011
E-mail : info@naiduconsulting.com

DRAWING No.: D732-52-4100

FOR TENDER

Ref Drg.	Description	
60356/002	RESERVOIR SITE PLAN LAYOUT	1 of 1
60356/007	DN300 OUTLET CHAMBER AND SCOUR DETAILS	1 of 1
60356/009	STANDARD ASSOCIATED DETAILS	1 of 2
60356/009	STANDARD ASSOCIATED DETAILS	2 of 2
60356/010	INLET AND OUTLET PIPELINE PLAN AND LONG SECTIONS	1 of 1
60356/017	ROAD PLAN AND SECTIONS	1 of 1
60356/018	ACCESS ROAD LONG SECTION AND CROSS SECTION	1 of 1

Standard Drawings

45002	TYPICAL TRENCH DETAILS	1 of 1

Reinforcing Ref. Drawings

Revision	Date	Description
0	OCT. 2021	FOR TENDER PURPOSES ONLY

NOTE: No construction work to commence until land and servitude acquisitions have been completed

Acquisitions completed:

Date Engineer

NORTH POINT

UNDERGROUND SERVICES CHECKED –

SERVICE	DATE	SIGNATURE
S.W DRAINS		
SEWERS		
WATERMAINS		
TELKOM CABLES		
ELECTRIC CABLES		
S.A.R CABLES		
E.S.C CABLES		
OIL PIPE LINE		

NOTE: Only underground services affected by new construction are shown. Care must be taken during excavations for road foundations,trenches etc.to avoid damage to underground services such as sewers,drains,cables,watermains and connections.Wherever possible these must be located before work begins.

Contract No. WS 7400

Project No. D732

Planning Unit EWS

Project Title
THANDOKUHLE RESERVOIR COMPARTMENT 1
CONSTRUCTION OF A 3ML REINFORCED CONCRETE RESERVOIR, 150mm Ø STEEL INLET, 300mm Ø STEEL OUTLET PIPELINES AND ASSOCIATED WORKS

Drawing Title
STORM WATER PIPELINE PLAN & LONG SECTIONS

Scales : As Shown
Original paper size : A0
Designed : D. Ramghulam
Checked : A. Goorun
Date : May 2021
Drawn : N. Adams

Area Engineer (W.O.)

Manager (W.D.)

Director (Water)

E.Msweli – Head: Water & Sanitation Unit

Drawing No.	Sheet	Rev.
60356/016	1 of 1	0

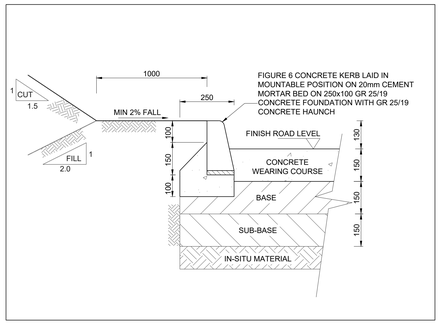

KERB DETAIL

SCALE 1:10

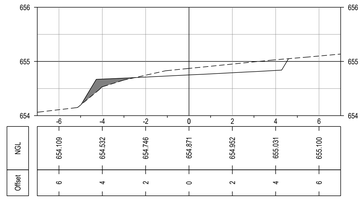

SECTION 1

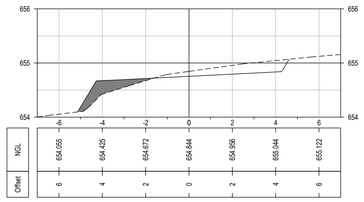

SECTION 2

LAYERWORKS DETAIL

SCALE 1:10

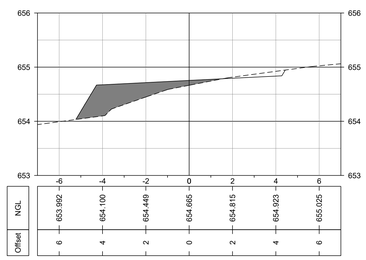

SECTION 3

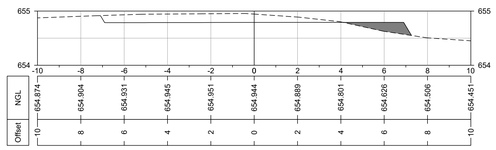

SECTION 4

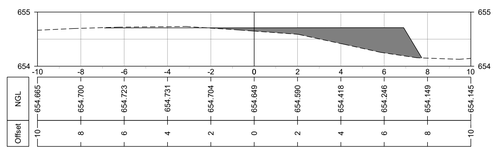

SECTION 5

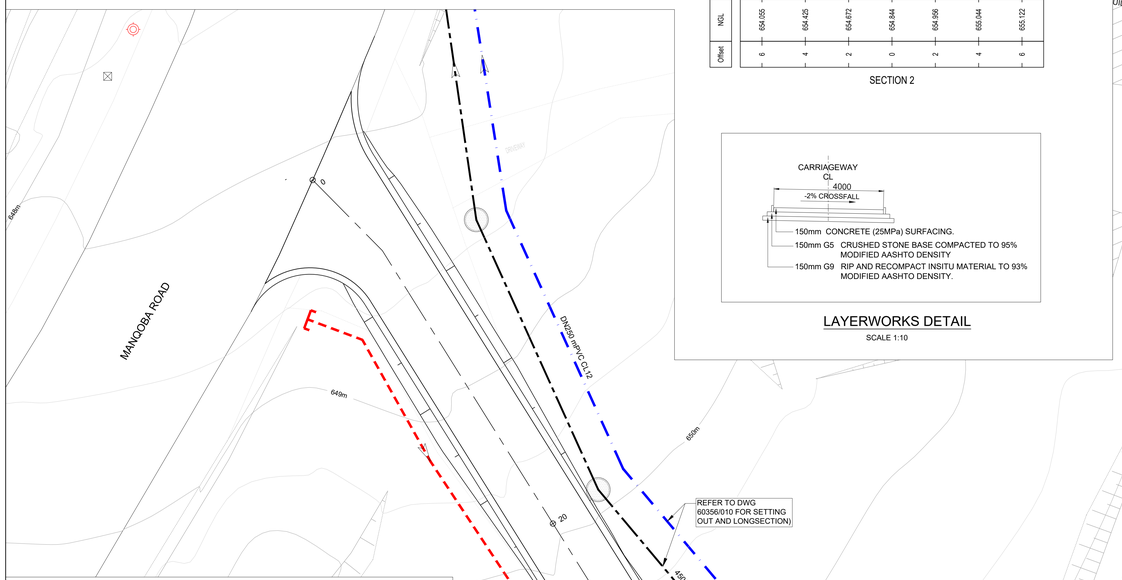

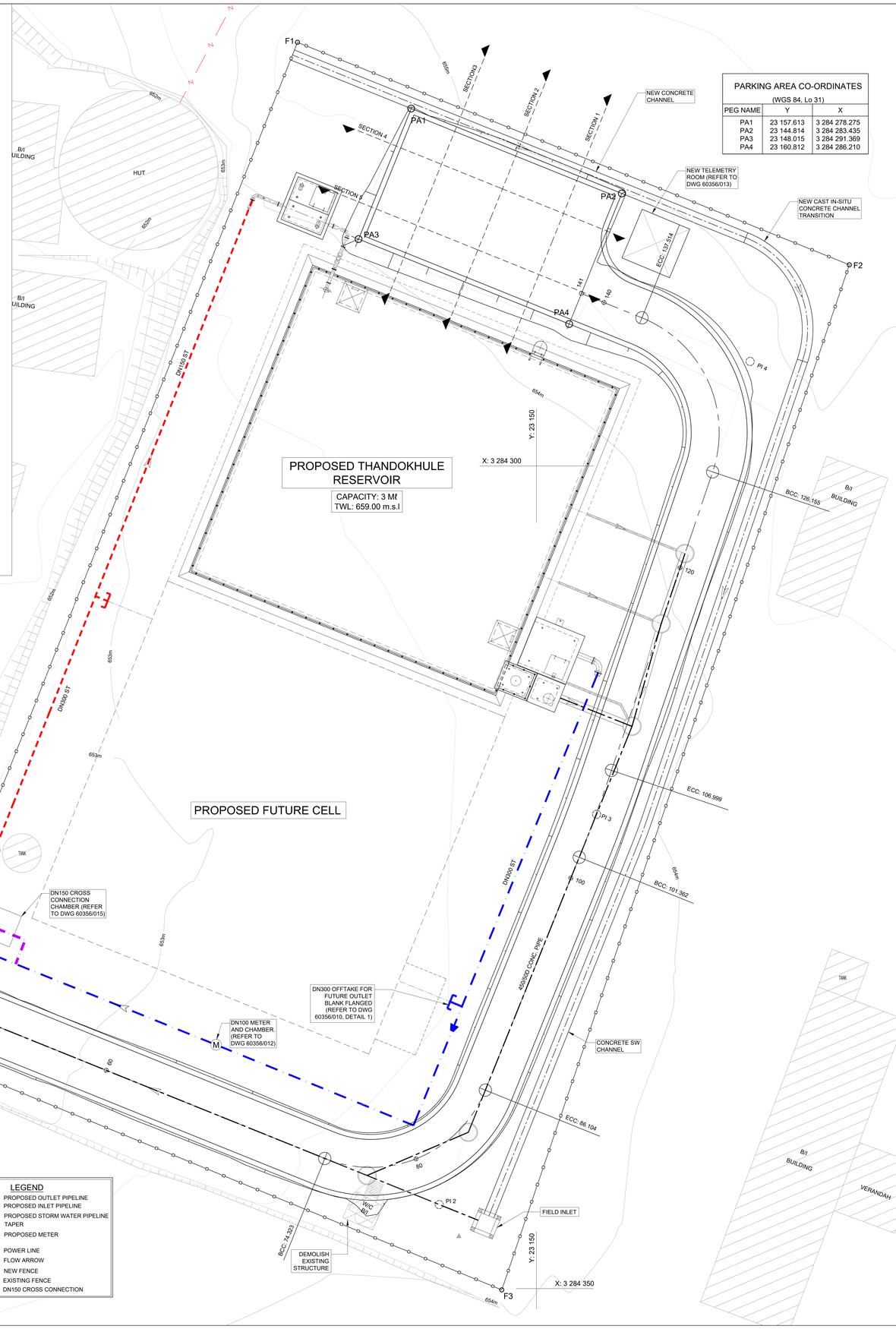

LEGEND

- PROPOSED OUTLET PIPELINE
- PROPOSED INLET PIPELINE
- PROPOSED STORM WATER PIPELINE
- TAPER
- PROPOSED METER
- POWER LINE
- FLOW ARROW
- NEW FENCE
- EXISTING FENCE
- DN150 CROSS CONNECTION

PARKING AREA CO-ORDINATES

(WGS 84, Lo 31)

PEG NAME	Y	X
PA1	23 157.613	3 284 278.275
PA2	23 144.814	3 284 283.435
PA3	23 148.015	3 284 291.369
PA4	23 160.812	3 284 286.210

eTHEKWINI WATER SERVICES

WATER DESIGN BRANCH — eTHEKWINI

REDUCED PLAN USE SCALE BELOW

0 10 20 30 40 50 60 70

70mm ON ORIGINAL PLAN

LEGEND

EXISTING UNDERGROUND SERVICES ARE AS SHOWN BELOW.

- SEWERS AND M.H'S
- STORM WATER DRAINS AND M.H'S
- WATER MAINS AND VALVES
- ELECTRICITY CABLES
- TELKOM CABLES
- OIL PIPELINES

CONSULTANT:

NAIDU CONSULTING

1st Floor
No.5 The Boulevard
West Way Office Park
Westville, Durban

Tel : +27 (0) 31 265 6007
Fax : +27 (0) 31 265 6011
E-mail : info@naiduconsulting.com

DRAWING No.: D732-52-2000

FOR TENDER

Ref Drg.	Description	
60356/002	RESERVOIR SITE PLAN LAYOUT	1 of 1
60356/007	DN300 OUTLET CHAMBER AND SCOUR DETAILS	1 of 1
60356/009	STANDARD ASSOCIATED DETAILS	1 of 2
60356/009	STANDARD ASSOCIATED DETAILS	2 of 2
60356/016	STORMWATER PLAN AND LONGSECTIONS	1 of 1
60356/018	ACCESS ROAD LONG SECTION AND CROSS SECTION	1 of 1

Reinforcing Ref. Drawings

Geotech Ref. Drawings

063-20.R02-001	Detail of Ground Improvement for Proposed Reservoir

Revision	Date	Description
0	OCT 2021	FOR TENDER PURPOSES ONLY

NOTE: No construction work to commence until land and servitude acquisitions have been completed

Acquisitions completed:

Date Engineer

NORTH POINT

UNDERGROUND SERVICES CHECKED –		
SERVICE	DATE	SIGNATURE
S.W DRAINS		
SEWERS		
WATERMAINS		
TELKOM CABLES		
ELECTRIC CABLES		
S.A.R CABLES		
E.S.C CABLES		
OIL PIPE LINE		

NOTE: Only underground services affected by new construction are shown. Care must be taken during excavations for road foundations,trenches etc.to avoid damage to underground services such as sewers,drains,cables,watermains and connections.Wherever possible these must be located before work begins.

Contract No. WS 7400

Project No. D732

Planning Unit EWS

Project Title

THANDOKUHLE RESERVOIR COMPARTMENT 1

CONSTRUCTION OF A 3ML REINFORCED CONCRETE RESERVOIR, 150mm Ø STEEL INLET, 300mm Ø STEEL OUTLET PIPELINES AND ASSOCIATED WORKS

Drawing Title

ROAD PLAN, PARKING AREA CROSS SECTIONS AND DETAILS

Scales :	As Shown		
Original paper size :	A0		
Designed :	D. Ramghulam	Date :	May 2021
Checked :	A. Goorun	Drawn :	N. Adams

Area Engineer (W.O.)

Manager (W.D.)

Director (Water)

E.Msweli – Head: Water & Sanitation Unit

Drawing No.	Sheet	Rev.
60356/017	1 of 1	0

SCALES:
Horizontal 1:250
Vertical 1:50

DATUM 648.000

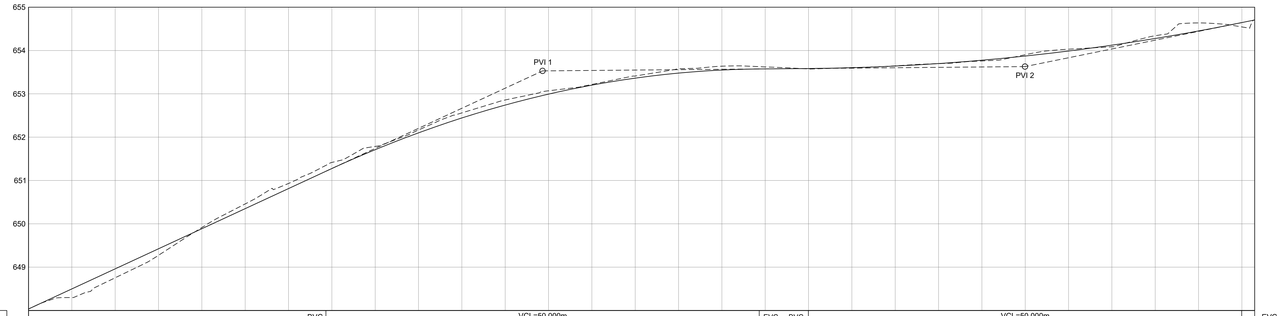

VERTICAL PROFILE GRADES	BVC 34.312; VCL=50.000m K=6; EVC 59.312 / BVC 84.312; VCL=50.000m K=13; EVC 139.977 — 9.264%; 553.529; 0.178%; 653.629; 114.977; 4.059%
CENTRE LINE (CL)	648.498; 648.961; 649.424; 649.887; 650.351; 650.814; 651.277; 651.711; 652.100; 652.443; 652.741; 652.994; 653.201; 653.362; 653.479; 653.549; 653.575; 653.584; 653.603; 653.641; 653.699; 653.775; 653.872; 653.988; 654.123; 654.277; 654.451; 654.644; 654.704
GROUND LEVELS ON CL	648.298; 648.755; 649.273; 649.915; 650.459; 650.931; 651.417; 651.786; 652.167; 652.560; 652.858; 653.070; 653.217; 653.411; 653.579; 653.638; 653.621; 653.575; 653.605; 653.646; 653.697; 653.759; 653.902; 654.030; 654.086; 654.341; 654.637; 654.686; 654.704
SUPERELEVATION LEFT / RIGHT	-2% / +2%
HORIZONTAL ALIGNMENT	DIRECTION 327°59'50"; TBCC1 23.676; CURVE 1 R=30.0m I=309°58'40"; 44.546 TECC1; DIRECTION 291°57'30"; TBCC2 74.323; CURVE 2 R=7.5m I=246°57'30"; 88.104 TECC2; DIRECTION 201°57'30"; TBCC3 101.752; CURVE 3 R=100.0m I=200°20'30"; 108.996 TECC3; DIRECTION 198°43'40"; TBCC4 126.150; CURVE 4 R=7.5m I=155°20'30"; 137.514 TECC4; DIR. 111°57'30"
DISTANCE (m)	5; 10; 15; 20; 25; 30; 35; 40; 45; 50; 55; 60; 65; 70; 75; 80; 85; 90; 95; 100; 105; 110; 115; 120; 125; 130; 135; 140

LONGSECTION ACCESS ROAD
FROM 0.000 TO 141.475

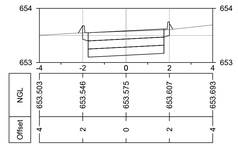

CH 90

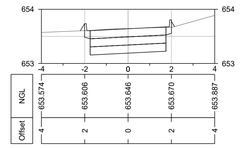

CH 100

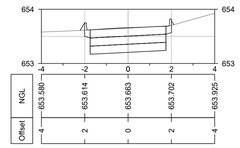

CH 101

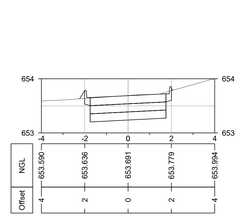

CH 104

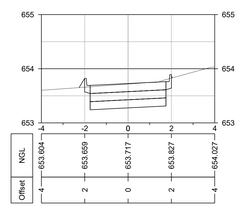

CH 107

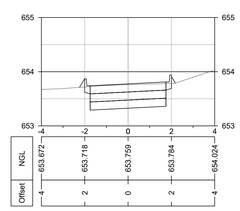

CH 110

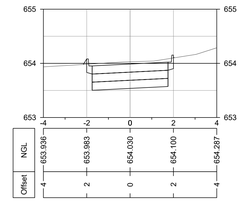

CH 120

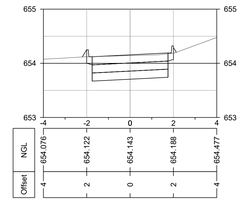

CH 126

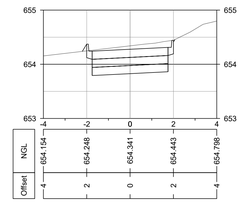

CH 130

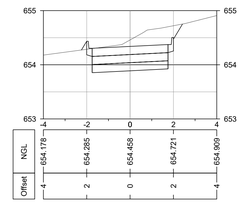

CH 132

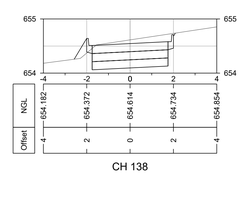

CH 138

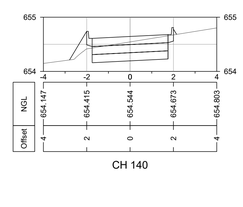

CH 140

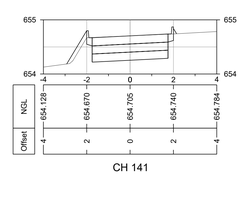

CH 141

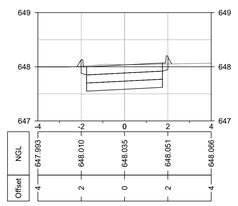

CH 0

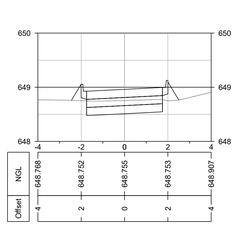

CH 10

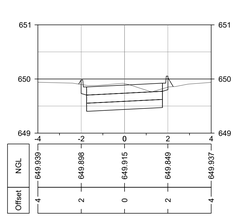

CH 20

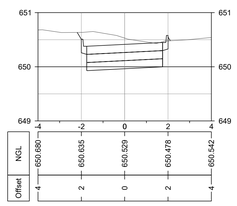

CH 26

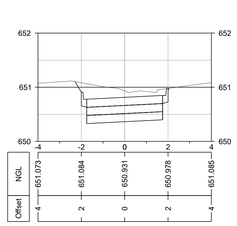

CH 30

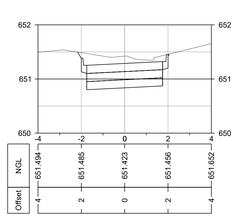

CH 35

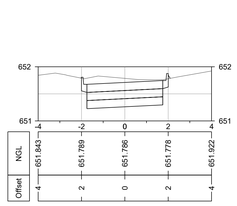

CH 40

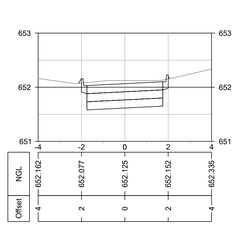

CH 45

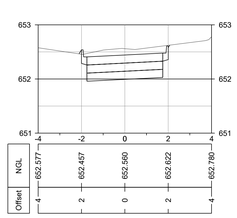

CH 50

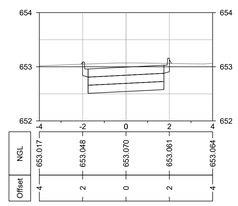

CH 60

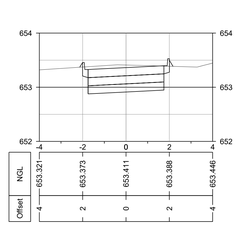

CH 70

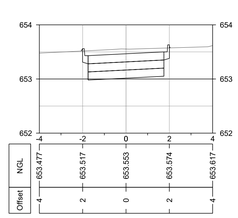

CH 74

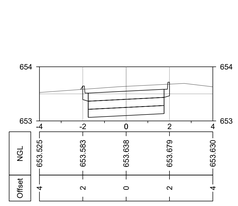

CH 80

CH 80

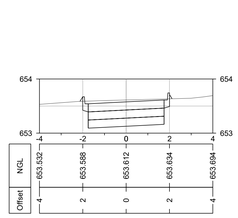

CH 86

eTHEKWINI
WATER SERVICES

WATER DESIGN BRANCH

eTHEKWINI

REDUCED PLAN USE SCALE BELOW

0 10 20 30 40 50 60 70

70mm ON ORIGINAL PLAN

LEGEND

EXISTING UNDERGROUND SERVICES
ARE AS SHOWN BELOW.

SEWERS AND M.H'S
STORM WATER DRAINS AND M.H'S
WATER MAINS AND VALVES
ELECTRICITY CABLES
TELKOM CABLES
OIL PIPELINES

CONSULTANT:

NAIDU CONSULTING

1st Floor
No.5 The Boulevard
West Way Office Park
Westville, Durban

Tel : +27 (0) 31 265 6007
Fax : +27 (0) 31 265 6011
E-mail : info@naiduconsulting.com

DRAWING No.: D732-52-2500

FOR TENDER

Ref Drg.	Description	
60356/002	RESERVOIR SITE PLAN LAYOUT	1 of 1
60356/009	STANDARD ASSOCIATED DETAILS	1 of 2
60356/009	STANDARD ASSOCIATED DETAILS	2 of 2
60356/016	STORMWATER PLAN AND LONGSECTIONS	1 of 1
60356/017	ROAD PLAN AND SECTIONS	1 of 1

Revision	Date	Description
0	OCT 2021	FOR TENDER PURPOSES ONLY

NOTE No construction work to commence until land and servitude acquisitions have been completed

Acquisitions completed:

Date Engineer NORTH POINT

UNDERGROUND SERVICES CHECKED –

SERVICE	DATE	SIGNATURE
S.W DRAINS		
SEWERS		
WATERMAINS		
TELKOM CABLES		
ELECTRIC CABLES		
S.A.R CABLES		
E.S.C CABLES		
OIL PIPE LINE		

NOTE: Only underground services affected by new construction are shown. Care must be taken during excavations for road foundations,trenches etc.to avoid damage to underground services such as sewers,drains,cables,watermains and connections.Wherever possible these must be located before work begins.

Contract No. WS 7400

Project No. D732

Planning Unit EWS

Project Title
THANDOKUHLE RESERVOIR COMPARTMENT 1
CONSTRUCTION OF A 3ML REINFORCED CONCRETE RESERVOIR, 150mm Ø STEEL INLET, 300mm Ø STEEL OUTLET PIPELINES AND ASSOCIATED WORKS

Drawing Title
ROAD LONG SECTION AND CROSS SECTIONS

Scales : As Shown
Original paper size : A0
Designed : D. Ramghulam Date : May 2021
Checked : A. Goorun Drawn : N. Adams

Area Engineer (W.O.)

Manager (W.D.)

Director (Water)

E.Msweli - Head:Water & Sanitation Unit

Drawing No. 60356/018 Sheet 1 of 1 Rev. 0

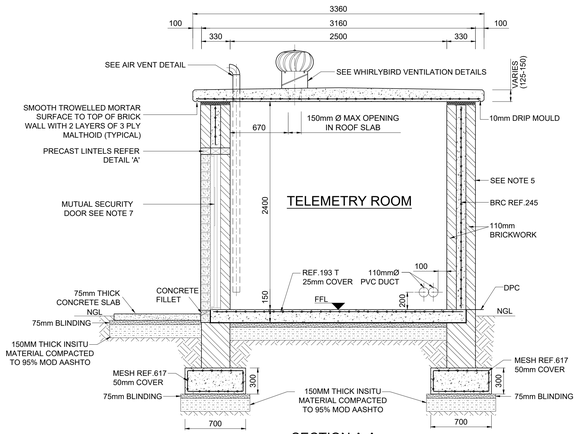

SECTION A-A

SCALE 1:25

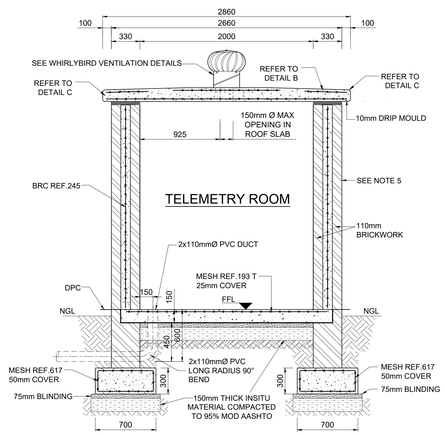

SECTION C-C

SCALE 1:25

WHIRLYBIRD SPECIFICATIONS:

THE WHIRLEYBIRD IS A STAINLESS STEEL CONSTRUCTION TURNING ON BALL BEARNGS WITH A TURBINE VENTILATOR.WITH THE BASE INCLUDED IT CAN BE ADJUSTED TO 45° PITCH. THE 21 AEROFOIL BLADES ARE SHAPED TO PREVENT RAIN AND DUST FROM PENETRATING THE UNIT. IT IS TESTED TO WITHSTAND HURRICANE-FORCE WINDS AND TEMPERATURES UP TO 80^{0}C

THE WHIRLYBIRD IS RESISTANT TO RUST AND CORROSION AND THE BEARINGS ARE LUBRICATED WITH HEAT-RESISTANT GREASE AND PERMINENTLY SEALED.

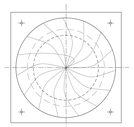

PLAN

MODEL	Ø	D	H
WHIRLY300	300	340	350

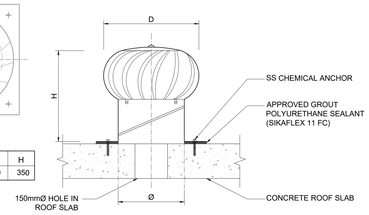

TYPICAL SECTION WHIRLYBIRD DETAIL

SCALE 1:10

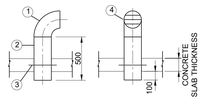

ITEM	DESCRIPTION	QTY
1	DN100/200 x 90° SHORT RADIUS BEND (ANSI B16.28)	1
2	DN100/200 x 4.5mm THK GMS PIPE, MIN 500mm LONG	1
3	DN100/200 x 4.5mm THK GMS PUDDLE FLANGE	1
4	3 No. 10mmØ BARS WELDED ACROSS OPENING AT EQUAL CENTERS	1

AIR VENT DETAIL

SCALE 1 : 25

NOTE: AIR VENT TO BE HEAVY DUTY HOT DIPPED GALVANISED TO SABS 763

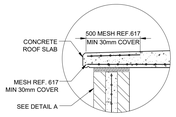

DETAIL C

SCALE 1:20

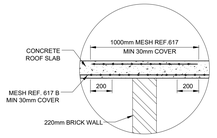

DETAIL B

SCALE 1:20

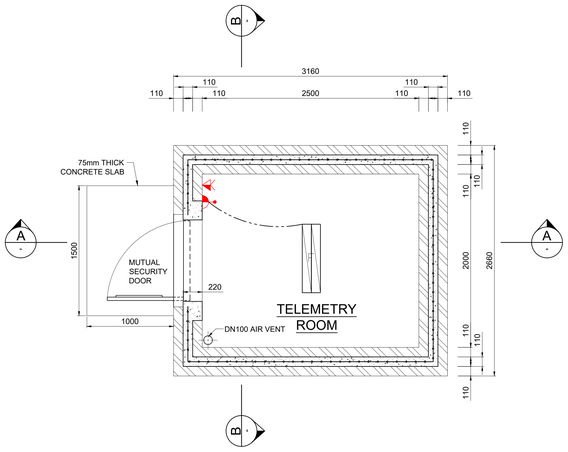

PLAN

SCALE 1:25

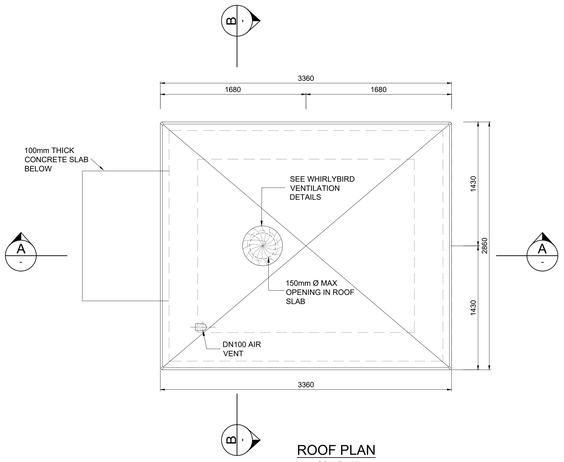

ROOF PLAN

SCALE 1:25

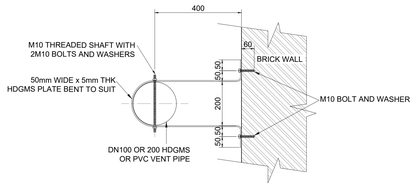

PLAN MOUNTING BRACKET FOR AIR VENT

SCALE 1:10

NOTES:

1. MINIMUM STRENGTH OF CONCRETE TO BE 25 MPa AT 28 DAYS.
2. MINIMUM COVER TO REINFORCING : ROOF SLAB - 30mm
   FLOOR SLAB AND FOUNDATIONS - 50mm
3. INTERNAL WALLS OF BRICKWORK ARE TO BE PLASTERED AND THEN PAINTED AS SPECIFIED.
4. ALL EXPOSED CONCRETE EDGES TO HAVE A 25mm X 25mm CHAMFER.
5. BRICKWORK TO BE REINFORCED WITH BRICKFORCE EVERY SECOND COURSE.
6. BRICKWORK : MORTAR CLASS :- II
   BRICK MASONRY BOND :- STREATCHER
   BOND EXTERNAL :- "ROAN" SATIN RED FACEBRICK
7. MUTUAL SECURITY DOOR (SEE NOTES)

MUTUAL SECURITY DOOR SPECIFICATIONS:

1. TYPE OF DOOR: ZINGA 1.
2. ALL DOORS TO BE SUPPLIED AND INSTALLED COMPLETE WITH OUTER FRAMES.
3. THE DOOR FINISH: TO BE HOT DIPPED GALVANIZED.
4. DOOR HANDLING: DOORS WILL BE RIGHT HAND HINGED
5. HANDLE: THE DOOR IS TO BE FITTED WITH A REMOVABLE DOOR HANDLE.
6. THE WALL OPENING SIZE FOR THE FITMENT OF THE MUTUAL SAFE DOOR.
7. LOCKING (TELEMETRY ROOM ONLY): THE MUTUAL SAFE DOOR IS TO BE FITTED WITH A MULTI LOCK TYPE CODE A380 AL (AVAILABLE FROM AA LOCKSMITHS). SAMPLE KEY TO BE PROVIDED BY EWS ON REQUEST
8. LOCKING MECHANISM PROTECTION (TELEMETRY ROOM ONLY): LOCK TO BE PROTECTED AS PER EWS STANDARDS (SUPPLIER IS AWARE OF DETAILS).

ELECTRICAL SCHEDULE / LEGEND

SYMBOL	No. OFF	DESCRIPTION / CODE
	1	2 x SINGLE PLUG POINTS: ONE PLUG TO BE FOR DC (WHITE PLUG) & ONE PLUG FOR UNINTERRUPTED POWER SUPPLY (RED UPS PLUG)
	1	WALL LIGHT SWITCH AS INDICATED
F	1	58W DOUBLE FLOURECENT LIGHT

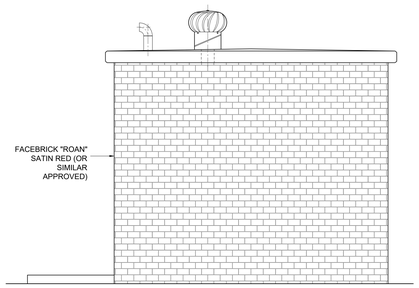

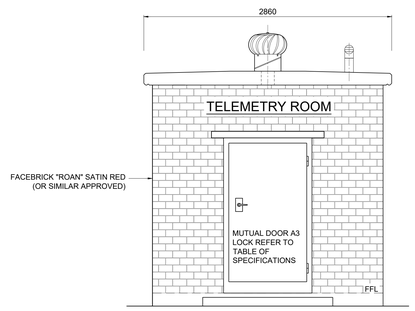

ELEVATION

SCALE 1:25

eTHEKWINI WATER SERVICES

WATER DESIGN BRANCH — eTHEKWINI

REDUCED PLAN USE SCALE BELOW

0 10 20 30 40 50 60 70

70mm ON ORIGINAL PLAN

CONSULTANT:

NAIDU CONSULTING

1st Floor
No.5 The Boulevard
West Way Office Park
Westville, Durban

Tel : +27 (0) 31 265 6007
Fax : +27 (0) 31 265 6011
E-mail : info@naiduconsulting.com

DRAWING NO.:- D732-52-5260

FOR TENDER

Ref Drg.	Description	
60356/002	RESERVOIR SITE PLAN LAYOUT	1 of 1
60356/009	STANDARD ASSOCIATED DETAILS	1 of 2
60356/009	STANDARD ASSOCIATED DETAILS	2 of 2

Standard Drawings

Revision	Date	Description
0	OCT 2021	FOR TENDER PURPOSES ONLY

NOTE: No construction work to commence until land and servitude acquisitions have been completed

Acquisitions completed:

Date Engineer NORTH POINT

UNDERGROUND SERVICES CHECKED –

SERVICE	DATE	SIGNATURE
S.W DRAINS		
SEWERS		
WATERMAINS		
TELKOM CABLES		
ELECTRIC CABLES		
S.A.R CABLES		
E.S.C CABLES		
OIL PIPE LINE		

NOTE: Only underground services affected by new construction are shown. Care must be taken during excavations for road foundations,trenches etc.to avoid damage to underground services such as sewers,drains,cables,watermains and connections.Wherever possible these must be located before work begins.

Contract No. WS 7400

Project No. D732

Planning Unit: EWS

Project Title: THANDOKUHLE RESERVOIR COMPARTMENT 1
CONSTRUCTION OF A 3ML REINFORCED CONCRETE RESERVOIR, 150mm Ø STEEL INLET, 300mm Ø STEEL OUTLET PIPELINES AND ASSOCIATED WORKS

Drawing Title: TELEMETRY ROOM

Scales : As Shown
Original paper size : A0
Designed : K. Holmes — Date : May 2021
Checked : G. Simpson — Drawn : N. Adams

Area Engineer (W.O.)

Manager (W.D.)

Director (Water)

E.Msweli – Head: Water & Sanitation Unit

Drawing No. 60356/019 — Sheet 1 of 1 — Rev. 0

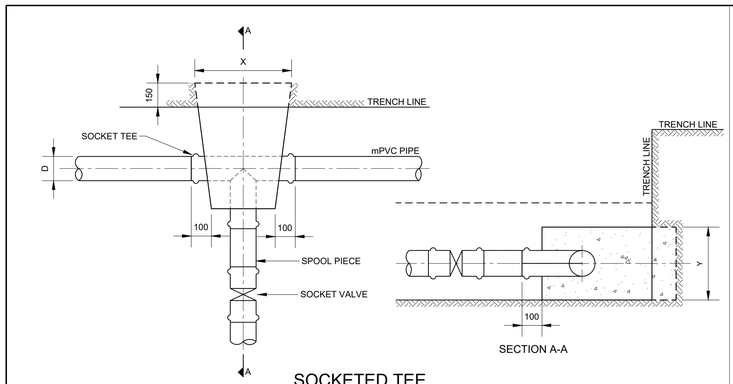

SECTION A-A

SOCKETED TEE

PLAN

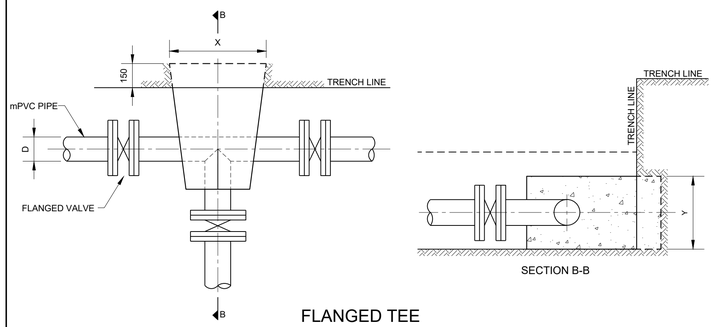

SECTION B-B

FLANGED TEE

PLAN

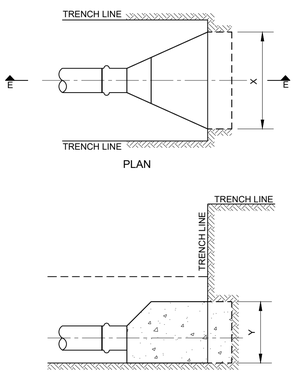

PLAN

SECTION D-D

END CAP

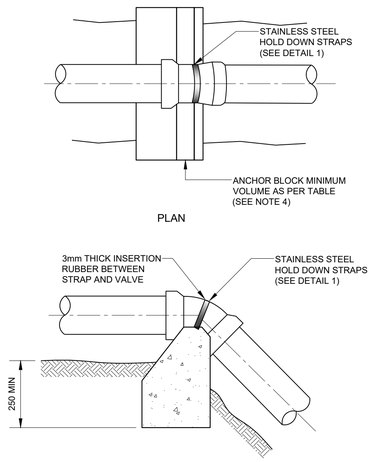

PLAN

ELEVATION

VERTICAL BENDS

ANCHOR BLOCK CONSTRUCTION NOTES
FOR VERTICAL BENDS:
1. LOCATE ANCHOR BLOCK CENTRALLY AROUND BEND.
2. KEY ANCHOR BLOCK INTO BASE OF TRENCH A MINIMUM DEPTH OF 250
3. KEEP CONCRETE CLEAR OF ALL BOLTS, NUTS AND PIPE JOINTS.

THRUST BLOCK SIZES (mm) IN NORMAL EARTH FOR HEADS OF 120m							
PIPE SIZE (D)	CAP X Y	TEE (BRANCH) X Y	90° 1/4 BEND X Y	45° 1/8 BEND X Y	22.5° 1/16 BEND X Y	11.25° 1/32 BEND X Y	VALVE X Y
50mm	200 x 100	200 x 100	300 x 100	200 x 100	100 x 100	100 x 100	200 x 100
75mm	200 x 200	200 x 200	300 x 250	250 x 200	200 x 200	200 x 200	200 x 200
110mm	400 x 200	400 x 200	500 x 300	300 x 250	200 x 200	200 x 200	400 x 200
160mm	600 x 300	600 x 300	600 x 500	500 x 350	300 x 300	250 x 200	600 x 300
200mm	800 x 400	800 x 400	900 x 600	800 x 400	500 x 300	300 x 250	800 x 400
250mm	800 x 600	800 x 600	900 x 900	800 x 600	600 x 400	300 x 300	800 x 600
315mm	1000 x 700	1000 x 700	1300 x 1000	1000 x 700	600 x 600	500 x 300	1000 x 700
355mm	1200 x 800	1200 x 800	1700 x 800	900 x 800	800 x 500	800 x 300	1200 x 800

NOTE: FOR THRUST BLOCK SIZES FOR REDUCERS REFER TO NOTE 12.

MINIMUM BLOCK VOLUME FOR ANCHORAGE VERTICAL BENDS FOR TEST PRESSURE OF 1200 kPa (SEE NOTE 4)			
PIPE DN	CONCRETE VOLUME (m3) 11.25° BEND	22.5° BEND	45° BEND
100	N	N	0.3
150	N	0.3	0.6
200	0.2	0.5	1.1
225	0.3	0.6	1.4
250	0.3	0.7	2.5
300	0.4	1.1	3.8
375	0.7	1.8	5.8

GENERAL NOTES:

1. CONCRETE IN ANCHOR BLOCKS TO BE CLASS 15/20.
2. CONCRETE ANCHOR BLOCKS SHALL BE CAST AGAINST UNDISTURBED NATURAL GROUND AS APPROVED BY THE ENGINEER OR IMPROVED GROUND USING SOILCRETE.
3. CONCRETE ANCHOR BLOCKS HAVE BEEN SIZED ON THE BASIS OF A PERMISSIBLE PASSING BEARING PRESSURE OF 146 kN/m2. IN THE EVENT THAT THIS BEARING PRESSURE IS CONSIDERED BY THE ENGINEER TO BE UNACHIEVABLE, THE DIMENSIONS OF X AND Y OF THE DIFFERENT THRUST BLOCK TYPES SHALL BE ADJUSTED ACCORDINGLY, WITH OR WITHOUT SOIL IMPROVEMENT USING SOILCRETE.
4. ANCHOR BLOCKS IN THE TABLE ARE DESIGNED FOR A TEST PRESSURE OF 1200 kPa (120m HEAD). ADJUST CONCRETE VOLUME TO SUIT ACTUAL TEST PRESSURE.
5. THE FOLLOWING BEARING PRESSURES ARE RECOMMENDED IN THE ABSENCE OF MORE RELIABLE GEOTECHNICAL DATA:

   SOFT CLAY: 55 kN/m2
   HARD CLAY: 100 kN/m2
   FINE SAND: 150kN/m2
   GRAVEL: 200kN/m2
   ROCK: 500kN/m2
6. THE SHAPE AND DIMENSIONS OF CONCRETE BLOCKS SHOWN ARE DIAGRAMMATIC ONLY.
7. CONCRETE ANCHOR BLOCKS MUST BE PROVIDED FOR ALL SOCKET VALVES.
8. WHERE A GROUP OF PIPES AND FITTINGS WITH RESTRAINED JOINTS ARE USED, ANCHOR BLOCKS ARE REQUIRED ONLY ON ONE COMPONENT IN THE GROUP.
9. WHERE mPVC RUBBER RING JOINTED PIPES ARE USED, THE NORMAL PRACTICE OF ANCHORING BENDS, TEES, END CAPS AND REDUCERS SHALL BE FOLLOWED.
10. UNLESS OTHERWISE SPECIFIED, CONCRETE ANCHORAGES ARE REQUIRED FOR ALL VALVES Ø200 AND ABOVE. THRUST AREA SHALL BE AS FOR END CAPS.
11. VALVES Ø350 OR LARGER SHALL BE INSTALLED IN A VALVE CHAMBER.
12. REDUCERS TO HAVE A MINIMUM AREA FOR ANCHORS EQUAL TO DIFFERENCE IN CORRESPONDING AREA FOR END CAPS OF EACH DIAMETER OF REDUCER.
13. ANCHOR BLOCK REINFORCEMENT AS SPECIFIED IN DESIGN DRAWINGS.
14. ALL DIMENSIONS IN MILLIMETRES UNLESS OTHERWISE SHOWN.

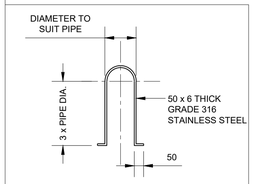

DETAIL 1

TYPICAL SS STRAP

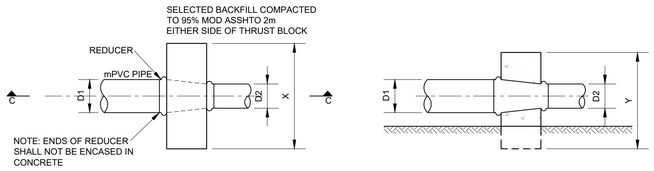

PLAN

SECTION C-C

TYPICAL THRUST BLOCKS FOR REDUCERS

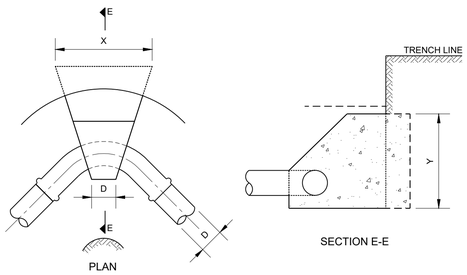

PLAN

SECTION E-E

HORIZONTAL BEND

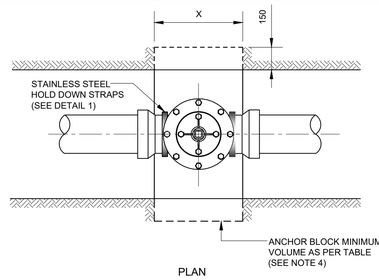

PLAN

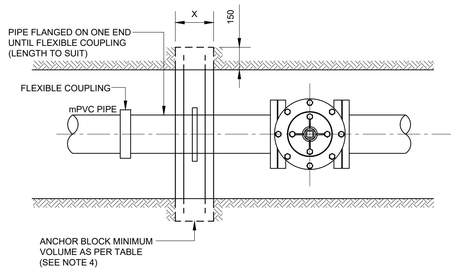

PLAN

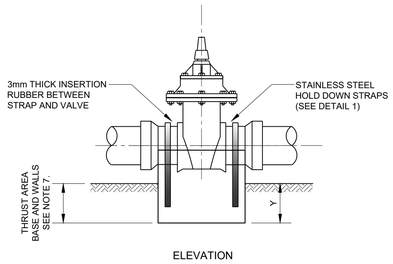

ELEVATION

SOCKETED VALVES

FOR BURIED RESTRAINED JOINT APPLICATIONS ONLY

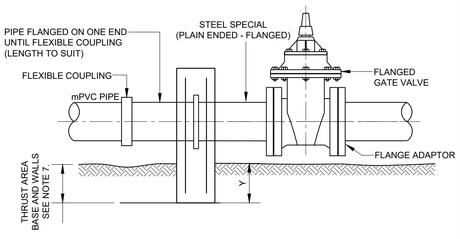

ELEVATION

FLANGED VALVES

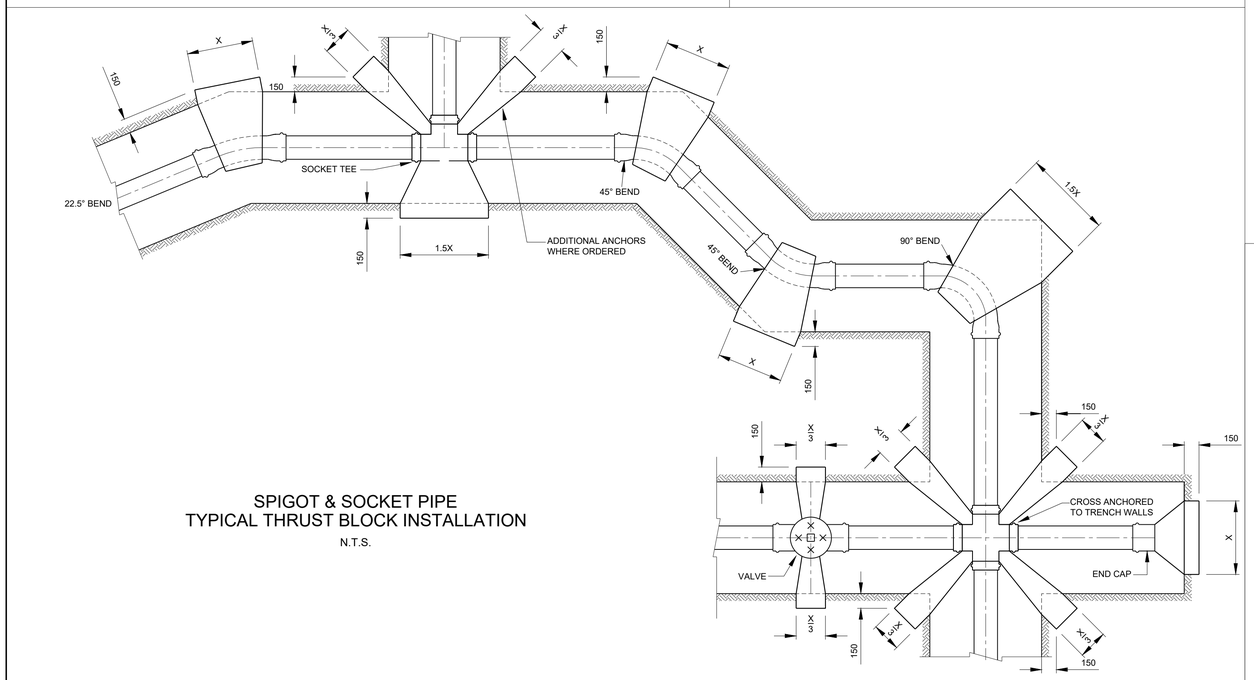

SPIGOT & SOCKET PIPE
TYPICAL THRUST BLOCK INSTALLATION

N.T.S.

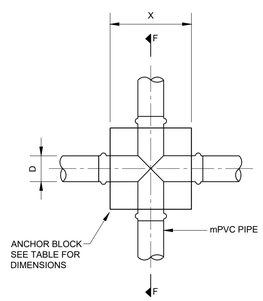

PLAN

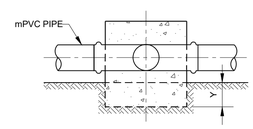

SECTION F-F

TYPICAL CROSS ANCHORED TO FOUNDATION

eTHEKWINI
WATER SERVICES

WATER DESIGN BRANCH eTHEKWINI

REDUCED PLAN USE SCALE BELOW

0 10 20 30 40 50 60 70

70mm ON ORIGINAL PLAN

LEGEND

EXISTING UNDERGROUND SERVICES ARE AS SHOWN BELOW.

SEWERS AND M.H'S
STORM WATER DRAINS AND M.H'S
WATER MAINS AND VALVES
ELECTRICITY CABLES
G.P.O TELEPHONE CABLES
OIL PIPELINES

CONSULTANT:

NAIDU CONSULTING

1st Floor
No.5 The Boulevard
West Way Office Park
Westville, Durban

Tel : +27 (0) 31 265 6007
Fax : +27 (0) 31 265 6011
E-mail : info@naiduconsulting.com

DRAWING No. D732-52-54001

FOR TENDER

Ref Drg.	Description
Standard Drawings	

Revision	Date	Description
0	OCT. 2021	FOR TENDER PURPOSES ONLY

UNDERGROUND SERVICE	SERVICES DATE	CHECKED SIGNATURE
S.W DRAINS		
SEWERS		
WATERMAINS		
G.P.O CABLES		
ELECTRIC CABLES		
S.A.R CABLES		
E.S.C CABLES		
OIL PIPE LINE		

NOTE: Only underground services affected by new construction are shown. Care must be taken during excavations for road foundations,trenches etc.to avoid damage to underground services such as sewers,drains,cables, watermains and connections.Wherever possible these must be located before work begins.

Contract No. WS 7400

Project No. D732

Project Title
THANDOKUHLE RESERVOIR COMPARTMENT 1
CONSTRUCTION OF A 3ML REINFORCED CONCRETE RESERVOIR, 150mm Ø STEEL INLET, 300mm Ø STEEL OUTLET PIPELINES AND ASSOCIATED WORKS

Drawing Title
STANDARD DETAILS
THRUST BLOCK DETAILS

Scales : As Shown	Original Paper : A1
Designed :D. Ramghulam	Date : May 2021
Checked : A. Goorun	Drawn : N. Adams

Area Engineer : Water Operations

Manager (W.D.)

Director (Water)

E.Msweli – Head: Water & Sanitation Unit

Drawing No.	Sheet	Rev.
45001	1 of 1	0

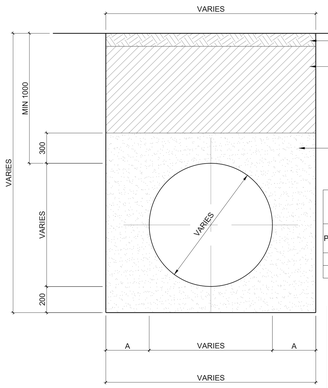

TABLE 1.1 SIDE ALLOWANCE DIMENSIONS	
PIPELINE DIAMETER	DIMENSION A
DN250	300
DN300	300

BEDDING NOTES

1. BEDDING IS TO BE PLACED IN TWO LAYERS.
2. THE FIRST 100mm LAYER IS TO BE PLACED AND COMPACTED AS PER SPECIFICATION.
3. THE PIPE IS TO BE LAID ON THE SECOND UNCOMPACTED LAYER TO PROVIDE A FINAL BEDDING THICKNESS OF 200mm.

DETAIL 1
TYPICAL PIPE TRENCH
SCALE 1:25

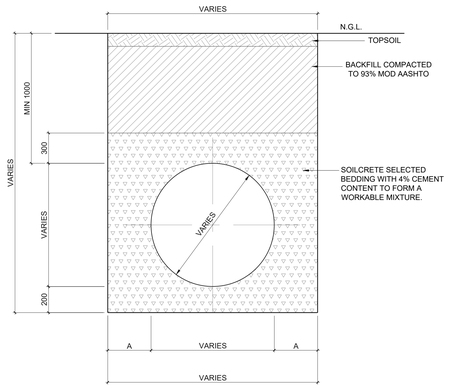

DETAIL 2
TYPICAL PIPE TRENCH WITH SOILCRETE BEDDING
SCALE 1:25

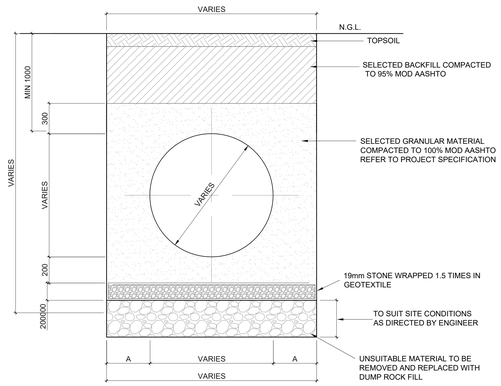

DETAIL 3
TYPICAL STONE BEDDING DETAIL
SCALE 1:25

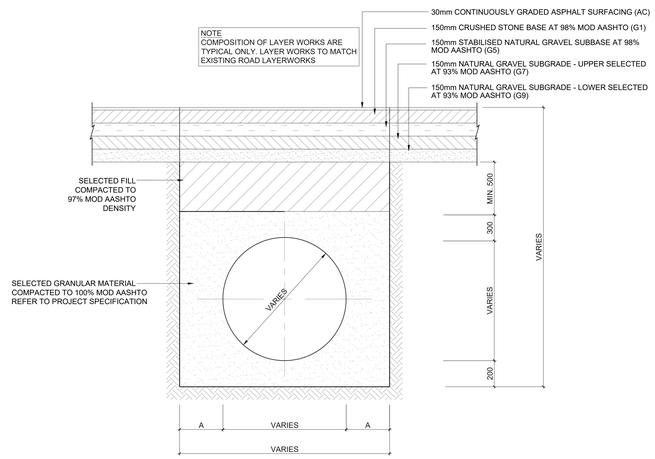

DETAIL 4
TYPICAL ROAD CROSSING TRENCH DETAIL
SCALE 1:25

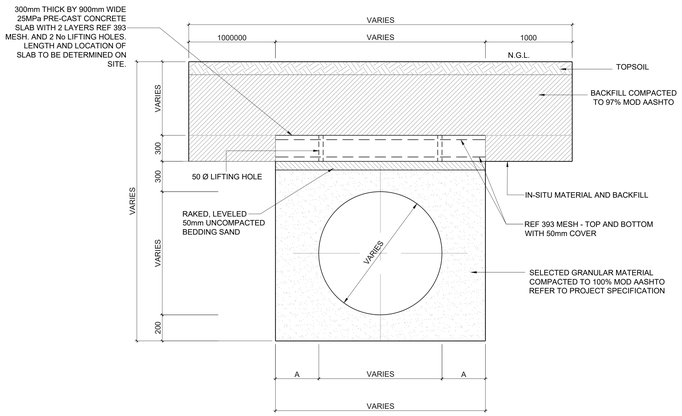

DETAIL 5
TYPICAL PIPE PROTECTION
(OCCURRENCES OF BELOW MINIMUM COVER)
SCALE 1:25

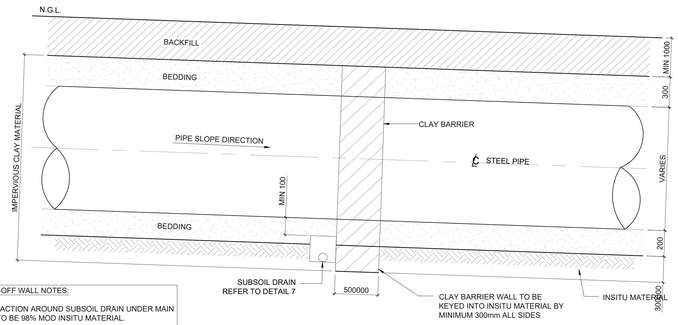

CLAY CUT-OFF WALL NOTES:

1. COMPACTION AROUND SUBSOIL DRAIN UNDER MAIN PIPE TO BE 98% MOD INSITU MATERIAL.
2. CLAY BARRIER WALL TO BE INSTALLED WHERE ORDERED BY THE ENGINEER.
3. CUT-OFF WALL OF IMPERVIOUS CLAY TO BE COMPACTED IN 150mm LAYERS.

DETAIL 6
TYPICAL PIPE CLAY CUT-OFF WALL AND SUB SOL DRAIN DETAIL
SCALE 1:25

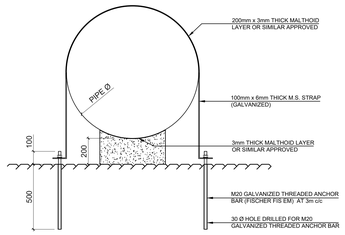

DETAIL 9
PIPE ANCHORAGE DETAIL
SCALE 1:10

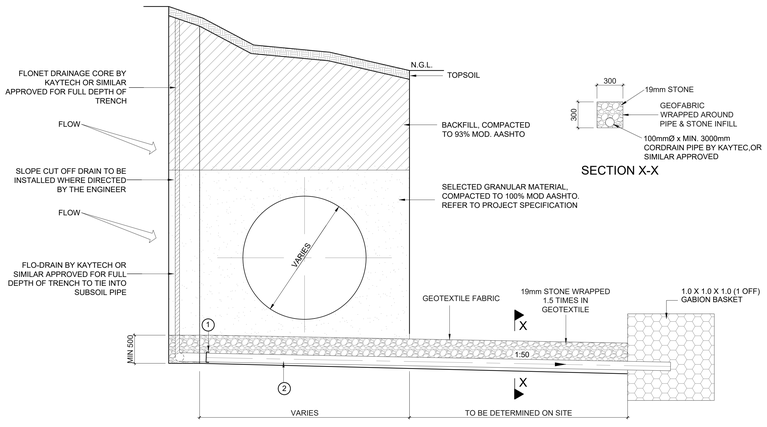

SECTION X-X

TABLE 7.1 PIPEWORK SCHEDULE	
ITEM	DESCRIPTION
1	110mmØ END CAP
2	100mmØ x MIN. 3000mm CORDRAIN PIPE BY KAYTEC OR SIMILAR APPROVED WITH 19mm STONE WRAPPED 1.5 TIMES IN GEOTEXTILE

DRAINAGE NOTES:

1. SUBSOIL DRAINAGE PIPE TO BE INSTALLED AT LOW POINTS AND WHERE INSTRUCTED BY THE ENGINEER.
2. GABION BASKET TO BE POSITIONED AT DAYLIGHT POSITION & WRAPPED IN A4 GEOTEXTILE.
3. 100mmØ HDPE TO BE LAID WITH 1 : 50 CONSTANT FALL INTO GABION BASKET.
4. MAX TRENCH WIDTH FOR 100mmØ PIPE TO BE DETERMINED ON SITE BY THE ENGINEER.
5. SUBSOIL PIPE TRENCH TO BE BACKFILLED WITH SELECTED BACKFILL AND COMPACTED TO 90% MOD AASHTO DENSITY.
6. DRAINAGE DETAIL IS SUBJECT TO APPROVAL ON SITE BY THE ENGINEER.

DETAIL 7
TYPICAL PIPE SUBSOIL AND SLOPE CUT OFF DRAIN DETAIL
SCALE 1:25

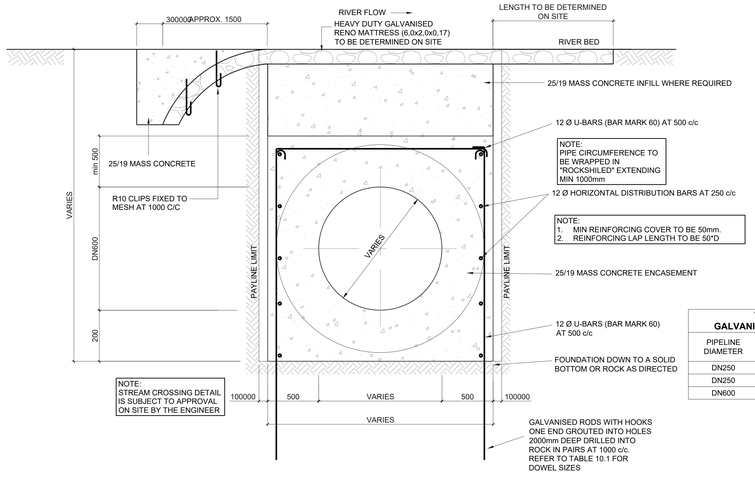

TABLE 8.1 GALVANISED DOWEL SIZES		
PIPELINE DIAMETER	DOWEL DIAMETER	DRILLED HOLE DIAMETER
DN250	16 Ø	25 Ø
DN250	16 Ø	25 Ø
DN600	32 Ø	40 Ø

DETAIL 8 TYPICAL STREAM CROSSING SECTIONAL DETAIL
SCALE 1:25

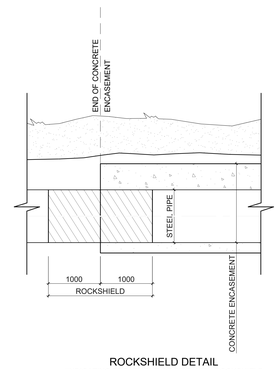

ROCKSHIELD DETAIL
(INDICATING TREATMENT OF PIPE WITH ROCKSHIELD (TAPE WRAP) AT TRANSITION FROM CONCRETE ENCASEMENT TO SOIL)

eTHEKWINI WATER SERVICES
WATER DESIGN BRANCH
eTHEKWINI

REDUCED PLAN USE SCALE BELOW
0 10 20 30 40 50 60 70
70mm ON ORIGINAL PLAN

CONSULTANT:
NAIDU CONSULTING

1st Floor, No.5 The Boulevard, West Way Office Park, Westville, Durban
Tel: +27 (0) 31 265 6007
Fax: +27 (0) 31 265 6011
E-mail: info@naiduconsulting.com

DRAWING No.: D732-52-45002

FOR TENDER

Ref Drg.	Description
60356/006	Inlet, Outlet & Storm Water Pipe Long Sections

Standard Drawings

Reinforcing Ref. Drawings

Geotech Ref. Drawings

063-20.R02-001		Detail of Ground Improvement for Proposed Reservoir
0	OCT 2021	FOR TENDER PURPOSES ONLY

Revision	Date	Description

NOTE: No construction work to commence until land and servitude acquisitions have been completed

Acquisitions completed:

Date Engineer NORTH POINT

UNDERGROUND SERVICES CHECKED –

SERVICE	DATE	SIGNATURE
S.W DRAINS		
SEWERS		
WATERMAINS		
TELKOM CABLES		
ELECTRIC CABLES		
S.A.R CABLES		
E.S.C CABLES		
OIL PIPE LINE		

NOTE: Only underground services affected by new construction are shown. Care must be taken during excavations for road foundations,trenches etc.to avoid damage to underground services such as sewers,drains,cables,watermains and connections.Wherever possible these must be located before work begins.

Contract No. WS 7400

Project No. D732

Planning Unit EWS

Project Title
THANDOKUHLE RESERVOIR COMPARTMENT 1
CONSTRUCTION OF A 3ML REINFORCED CONCRETE RESERVOIR, 150mm Ø STEEL INLET, 300mm Ø STEEL OUTLET PIPELINES AND ASSOCIATED WORKS

Drawing Title
STANDARD DETAILS
TYPICAL TRENCH DETAILS

Scales : As Shown
Original paper size : A0
Designed : D. Ramghulam
Date : May 2021
Checked : A. Goorun
Drawn : N. Adams

Area Engineer (W.O.)

Manager (W.D.)

Director (Water)

E.Msweli – Head: Water & Sanitation Unit

Drawing No.	Sheet	Rev.
45002	1 of 1	0

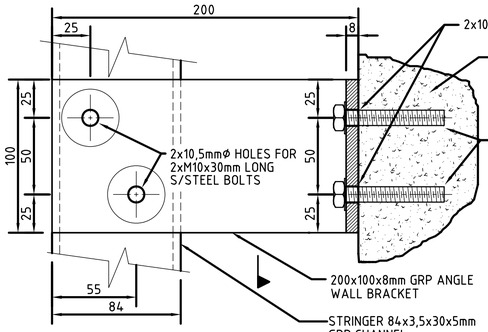

SECTION A–A

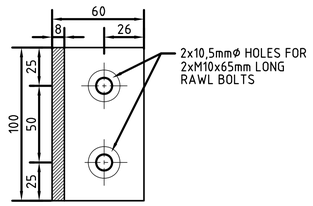

SECTION B–B

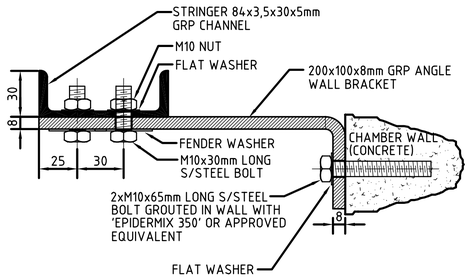

PLAN

DETAIL 'A' – WALL BRACKET DETAIL

Scale 1:2

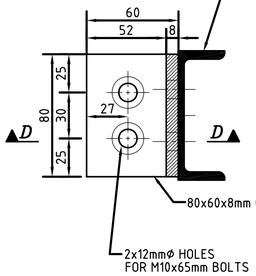

PLAN

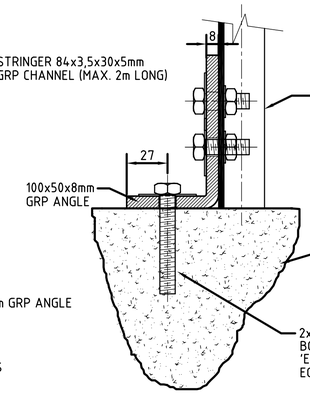

SECTION D–D

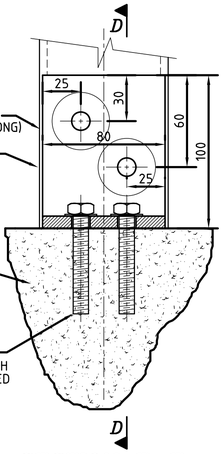

SECTION E–E

DETAIL 'B' – BASE ANGLE DETAIL (OPTIONAL)

Scale 1:2

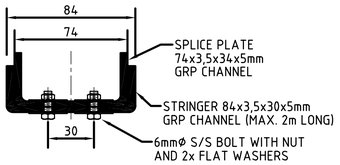

SECTION G–G

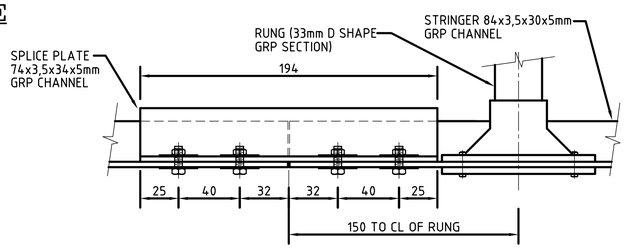

SECTION F–F

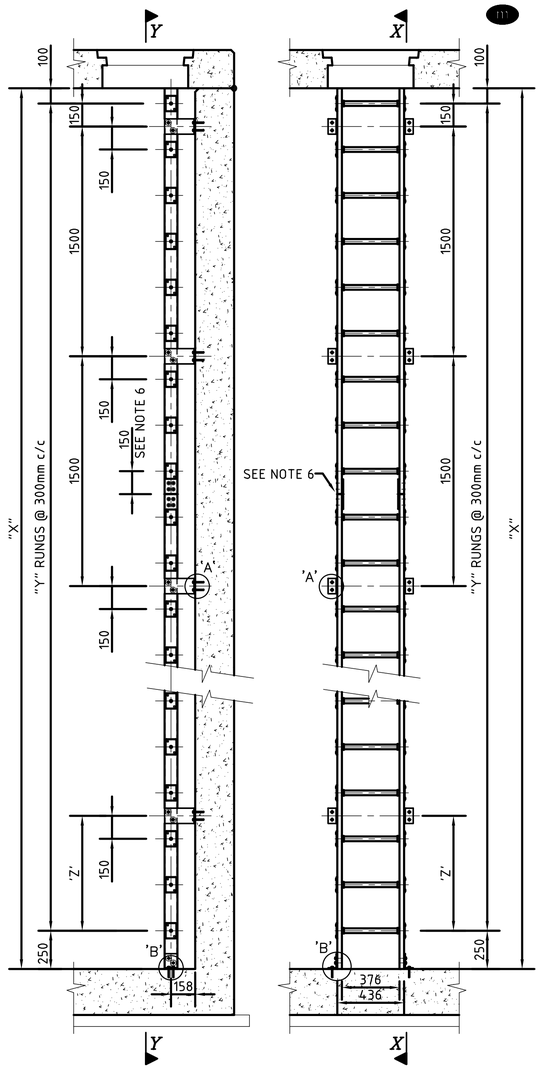

SECTION X–X

SECTION Y–Y

SECTIONAL VIEWS ON ACCESS LADDER

Scale 1:20

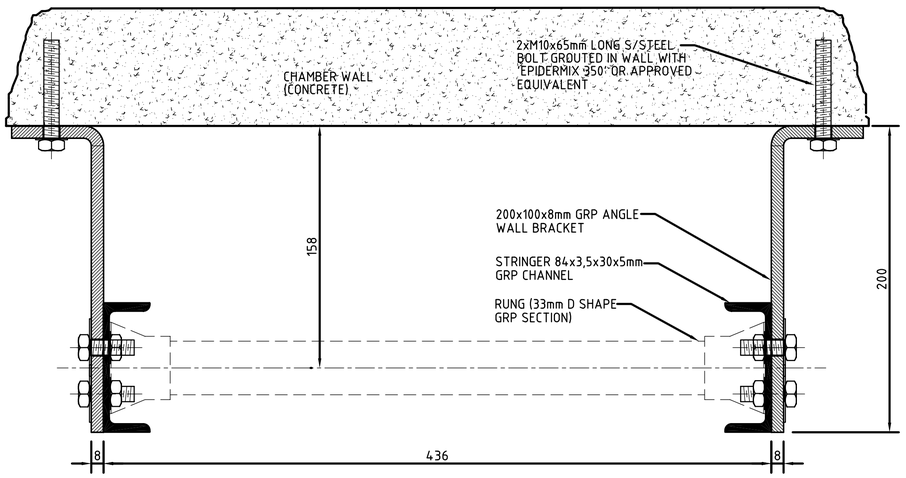

PLAN ON LADDER

Scale 1:2

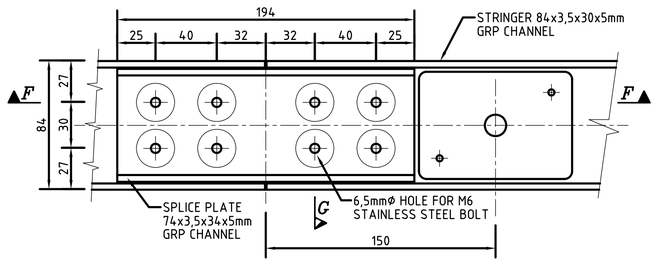

VIEW ON STRINGER AT SPLICE PLATE

SPLICE PLATE DETAIL

Scale 1:2

NOTES :

1. THE TOPMOST RUNG TO BE 300mm OR LESS BELOW TOP OF FLOOR.
2. THE FIRST SUPPORT BRACKET TO BE 150mm BELOW THE TOPMOST RUNG.
3. SUPPORT BRACKETS TO BE SPACED AT 1500mm CENTRES.
4. THE MAXIMUM LENGTH OF EACH STRINGER TO BE NOT MORE 2000mm.
5. LEGEND : "X" = HEIGHT FROM TOP OF FLOOR TO SOFFIT OF ROOF
   "Y" = TOTAL NUMBER OF RUNGS (RUNGS @ 300mm c/c)
   "Z" = HEIGHT FROM BOTTOM RUNG TO LOWEST SUPPORT
   NOTE "Z" MUST NOT EXCEED 1500mm.
6. IF THE HEIGHT OF THE LADDER IS MORE THAN 2000mm, SPLICE PLATES SHALL BE USED TO JOIN THE SECTIONS (SEE SPLICE PLATE DETAIL).
7. BASE PLATE TO BE USED AS AN OPTION ONLY WHEN REQUIRED. OR AS DIRECTED BY THE ENGINEER / TECHNICIAN.
8. WHERE A LADDER USED IS MORE THAN 2,3m ABOVE GROUND LEVEL OR PLATFORM, OR WHERE DIRECTED BY THE ENGINEER / TECHNICIAN, A SAFETY CAGE (DETAIL ON SHEET 2) MUST BE FITTED.

DURBAN METRO WATER SERVICES

WATER DESIGN BRANCH

Durban Metro

REDUCED PLAN USE SCALE BELOW

0 10 20 30 40 50 60 70

70mm ON ORIGINAL PLAN

LEGEND

EXISTING UNDERGROUND SERVICES ARE AS SHOWN BELOW.

SEWERS AND M.H'S
STORM WATER DRAINS AND M.H'S
WATER MAINS AND VALVES
ELECTRICITY CABLES
G.P.O TELEPHONE CABLES
OIL PIPELINES

Revision	Date	Description
0	14/05/02	ISSUED FOR CONSTRUCTION
A	20/09/01	ISSUED FOR SIGNATURE

NOTE: No construction work to commence until land and servitude acquisitions have been completed.

Acquisitions completed:

Date Engineer NORTH POINT

UNDERGROUND SERVICES CHECKED

SERVICE	DATE	SIGNATURE
S.W DRAINS		
SEWERS		
WATERMAINS		
G.P.O CABLES		
ELECTRIC CABLES		
S.A.R CABLES		
E.S.C CABLES		
OIL PIPE LINE		

NOTE: Only underground services affected by new construction are shown. Care must be taken during excavations for road foundations,trenches etc.to avoid damage to underground services such as sewers,drains,cables, watermains and connections.Wherever possible these must be located before work begins.

Contract No.

STANDARD DRAWING

Project No.

Project Title

STANDARD DRAWING

Drawing Title

STANDARD DRAWING OF GRP ACCESS LADDER

PLAN, SECTION AND DETAILS

Scales : AS SHOWN

Designed : A.C.M. Date : SEPT. 2001

Checked : Drawn : P.T. NGIDI

Area Engineer : Water Operations

Manager (W.D.)

Director (Water)

N.A.Macleod – Executive Director

Drawing No. 45005 Sheet 1 of 2 Rev. 0

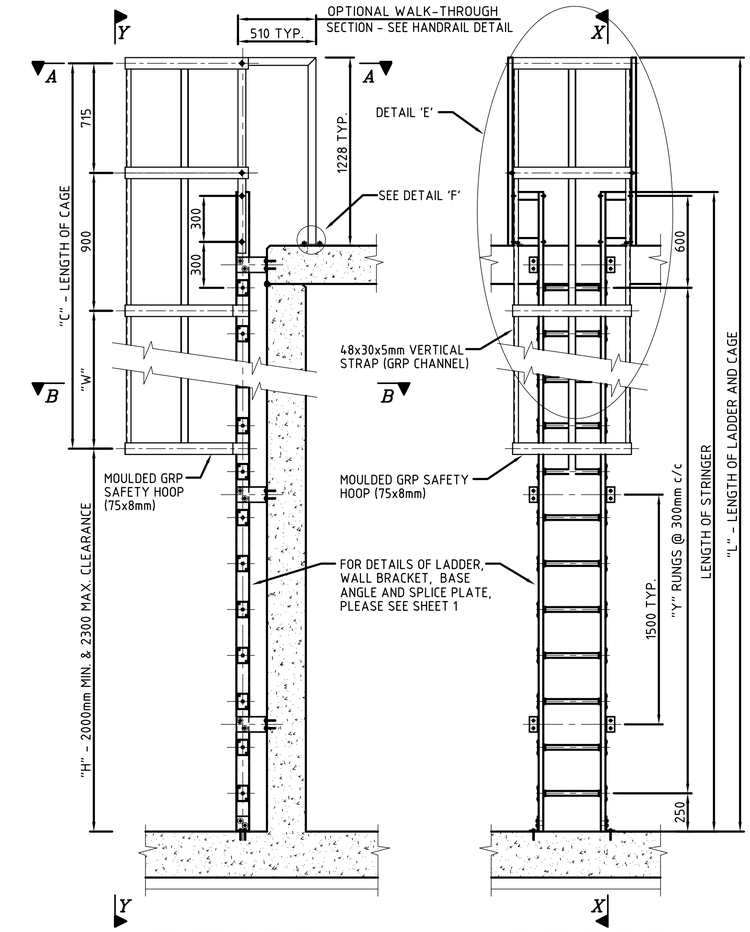

SECTION X–X

SECTION Y–Y

SECTIONAL VIEWS ON ACCESS LADDER

Scale 1:20

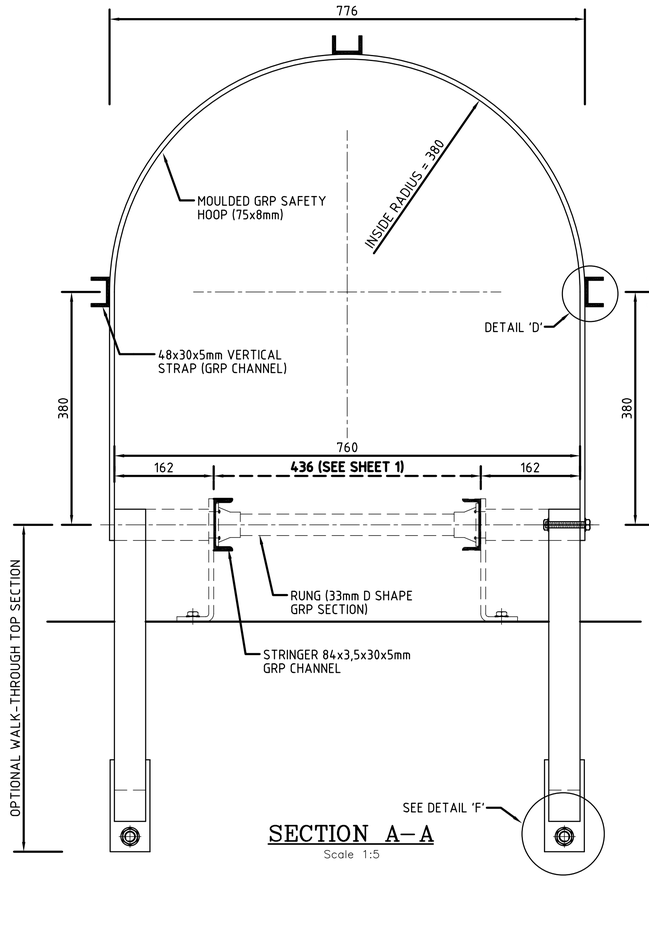

SECTION A–A

Scale 1:5

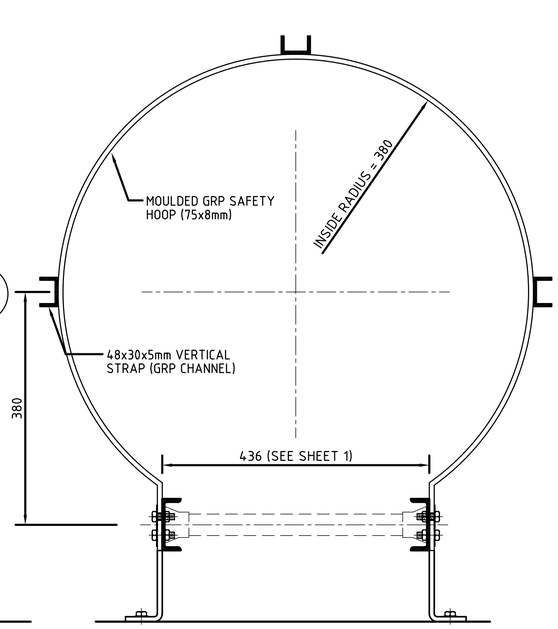

SECTION B–B

Scale 1:5

NOTES :

1. FOR DETAILS OF LADDER, WALL BRACKETS,BASE ANGLE (IF REQUIRED) AND SPLICE PLATE, PLEASE SEE SHEET 1.
2. THE WALK-THROUGH TOP SECTION TO BE FITTED AS AN OPTION WHEN REQUIRED OR AS DIRECTED BY THE ENGINEER / TECHNICIAN.
3. PULTRUDED PROFILES TO BE MANUFACTURED WITH AN ISO POLYESTER RESIN AND E-GLASS FIBER.
4. THE COLOUR OF THE STYLES AND CAGE HOOPS ARE GOLDEN YELLOW.
5. THE COLOUR OF THE RUNGS AND THE CAGE STRAPS ARE CLOUD GREY.
6. ALL BOLTS, NUTS AND FENDER WASHERS TO BE USED TO MANUFACTURE THE PRODUCT MUST BE STAINLESS STEEL GRADE 316.
7. LEGEND "L" = HEIGHT TO TOP OF FLOOR PLUS 1228mm.
   "C" = ("L" - "H") WHERE "H" = 2000mm MIN. AND 2300mm MAX.
   "W" = 900mm OR 600mm (WHERE 900mm IS TYPICAL HEIGHT AND 600mm IS USED IN ORDER TO AVOID COINCIDENCE BETWEEN SAFETY HOOPS AND WALL BRACKETS.) EXCEPT FOR THE TWO TOPMOST SPACES (715mm & 900mm) WHICH HAVE FIXED HEIGHTS.
8. THE TOTAL NUMBER OF SPACES ("W") BETWEEN SAFETY HOOPS ARE DEPENDENT ON THE LENGTH OF "C".

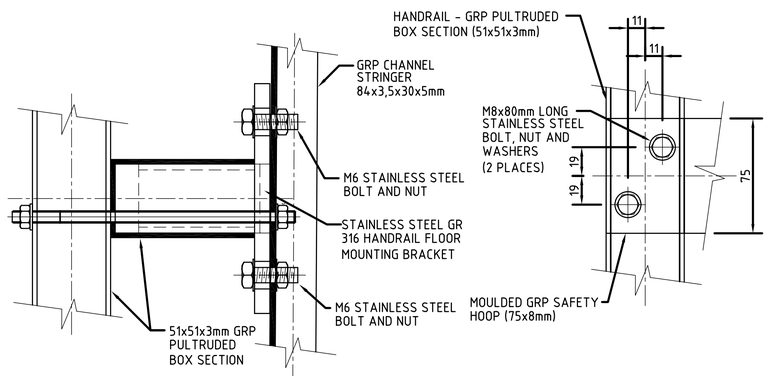

SECTION Z–Z

Scale 1:2

DETAIL 'G'

Scale 1:2

HANDRAIL NOTES :

1. CORNERS TO BE JOINED BY INTERNAL INSERTS AND AN EPOXY ADHESIVE.
2. COLOUR OF HANDRAIL: YELLOW
3. STAINLESS STEEL GRADE 316 BOLTS, NUTS AND WASHERS TO BE USED TO FIX THE HANDRAIL TO THE CAGE, STRINGER AND STAINLESS STEEL FOOT PIECE.
4. NOTE THAT THE OTHER HANDRAIL IS A MIRROR COPY OP THIS HANDRAIL.
5. FIXING DETAILS TO BE DETERMINED BY SUPPLIER.

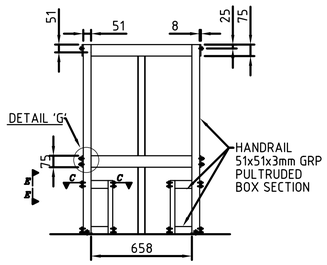

DETAIL 'E'

Scale 1:20

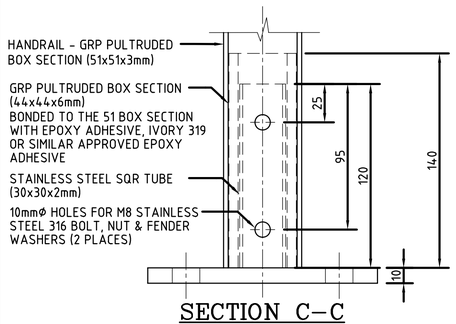

SECTION C–C

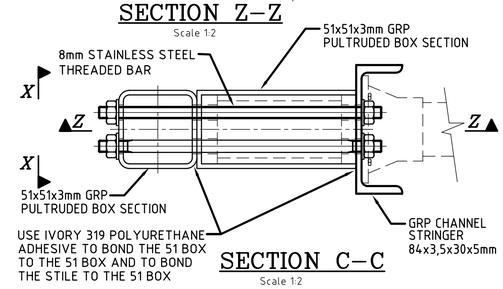

SECTION C–C

Scale 1:2

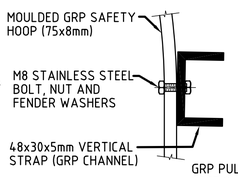

DETAIL 'D'

Scale 1:2

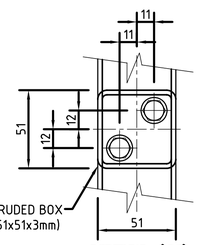

VIEW 'X'

Scale 1:2

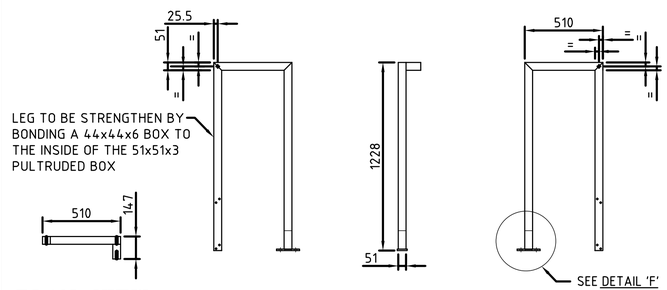

PLAN VIEW SIDE VIEW FRONT VIEW SIDE VIEW

SAFETY CAGE HANDRAIL DETAIL

Scale 1:20

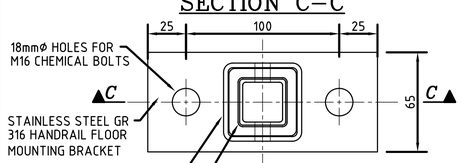

PLAN

DETAIL 'F'

Scale 1:2

DURBAN METRO WATER SERVICES

WATER DESIGN BRANCH

Durban Metro

REDUCED PLAN USE SCALE BELOW

0 10 20 30 40 50 60 70

70mm ON ORIGINAL PLAN

LEGEND

EXISTING UNDERGROUND SERVICES ARE AS SHOWN BELOW.

SEWERS AND M.H'S
STORM WATER DRAINS AND M.H'S
WATER MAINS AND VALVES
ELECTRICITY CABLES
G.P.O TELEPHONE CABLES
OIL PIPELINES

Revision	Date	Description
0	14/05/02	ISSUED FOR CONSTRUCTION
A	20/09/01	ISSUED FOR SIGNATURE

NOTE: No construction work to commence until land and servitude acquisitions have been completed.

Acquisitions completed:

Date Engineer

NORTH POINT

UNDERGROUND SERVICES CHECKED

SERVICE	DATE	SIGNATURE
S.W DRAINS		
SEWERS		
WATERMAINS		
G.P.O CABLES		
ELECTRIC CABLES		
S.A.R CABLES		
E.S.C CABLES		
OIL PIPE LINE		

NOTE: Only underground services affected by new construction are shown. Care must be taken during excavations for road foundations,trenches etc.to avoid damage to underground services such as sewers,drains,cables, watermains and connections.Wherever possible these must be located before work begins.

Contract No.

STANDARD DRAWING

Project No.

Project Title

STANDARD DRAWING

Drawing Title

STANDARD DRAWING OF GRP ACCESS LADDER SAFETY CAGE

PLAN, SECTION AND DETAILS

Scales : AS SHOWN

Designed : A.C.M. Date : SEPT. 2001

Checked : Drawn : P.T. NGIDI

Area Engineer : Water Operations

Manager (W.D.)

Director (Water)

N.A.Macleod – Executive Director

Drawing No. 45005 Sheet 2 of 2 Rev. 0

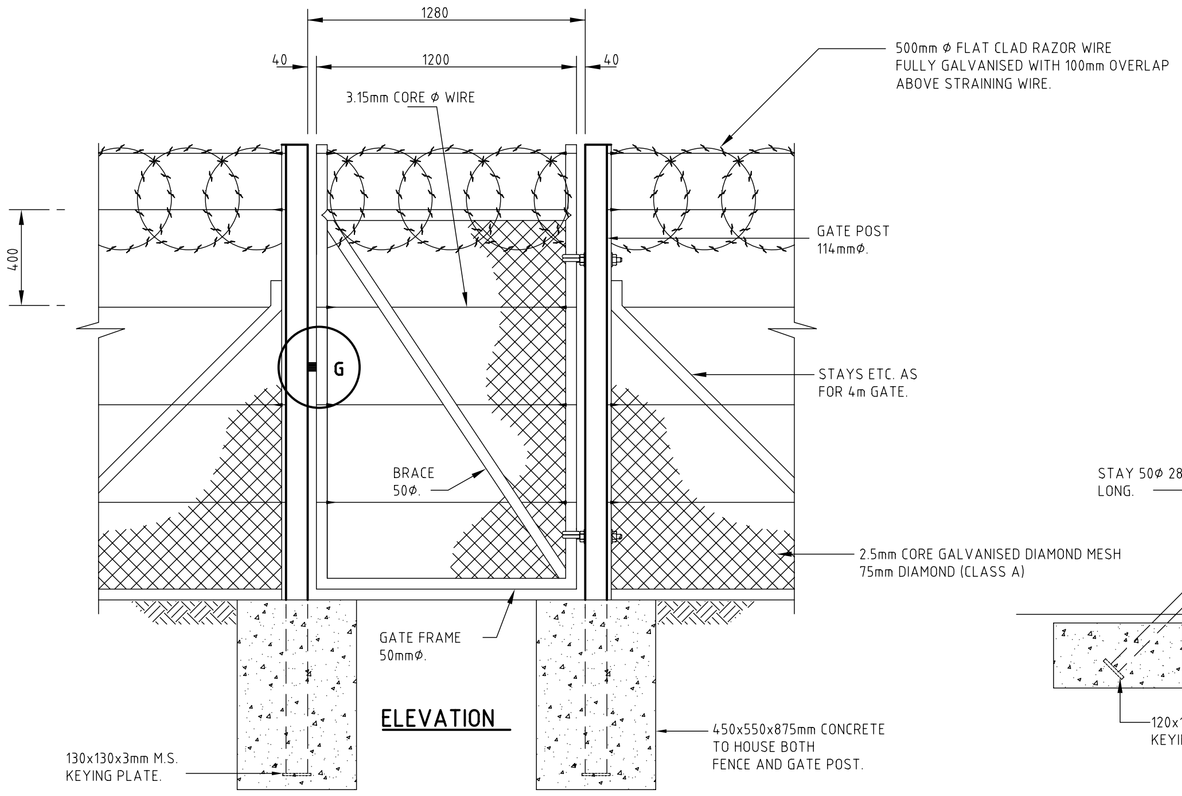

PEDESTRIAN GATE

(SCALE 1 : 20)

ALL METAL TO BE HOT-DIP GALVANISED.

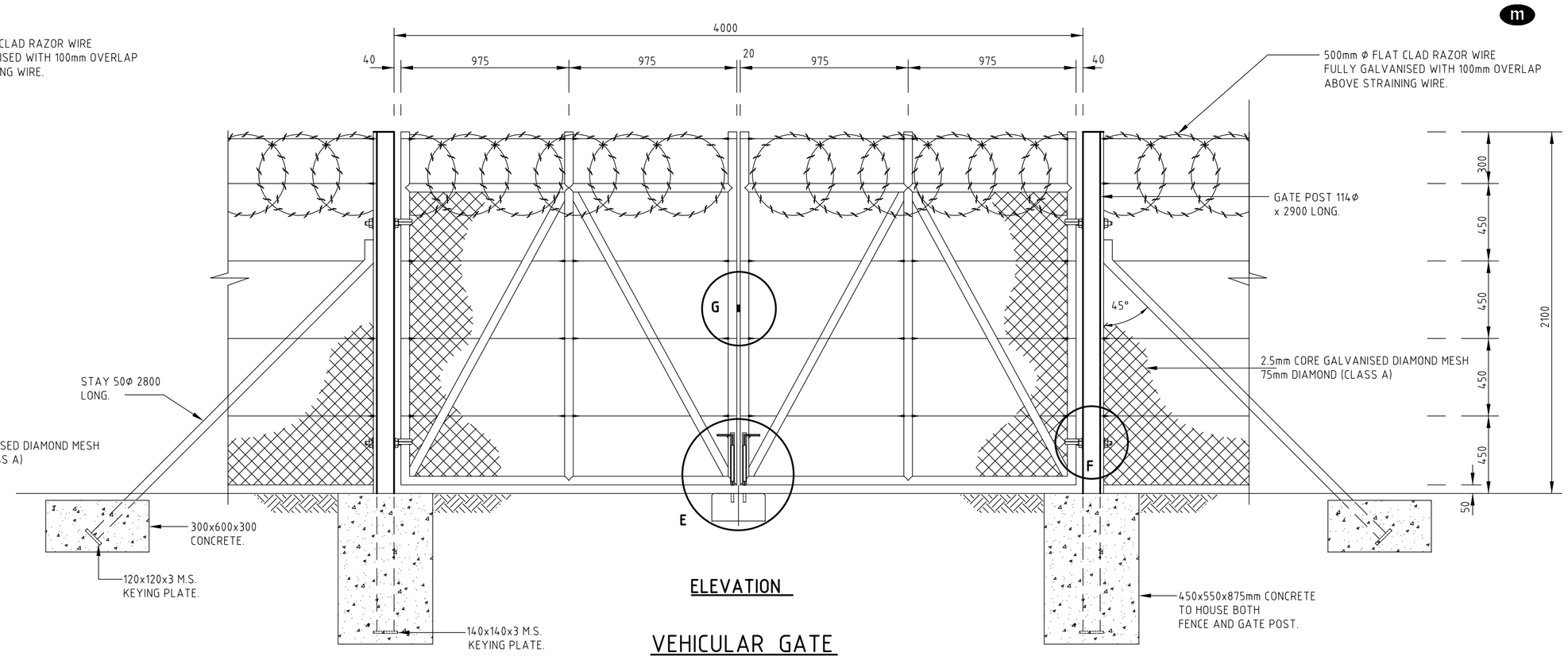

VEHICULAR GATE

(SCALE 1 : 20)

GATE FRAMES TO BE HOT-DIP GALVANISED.

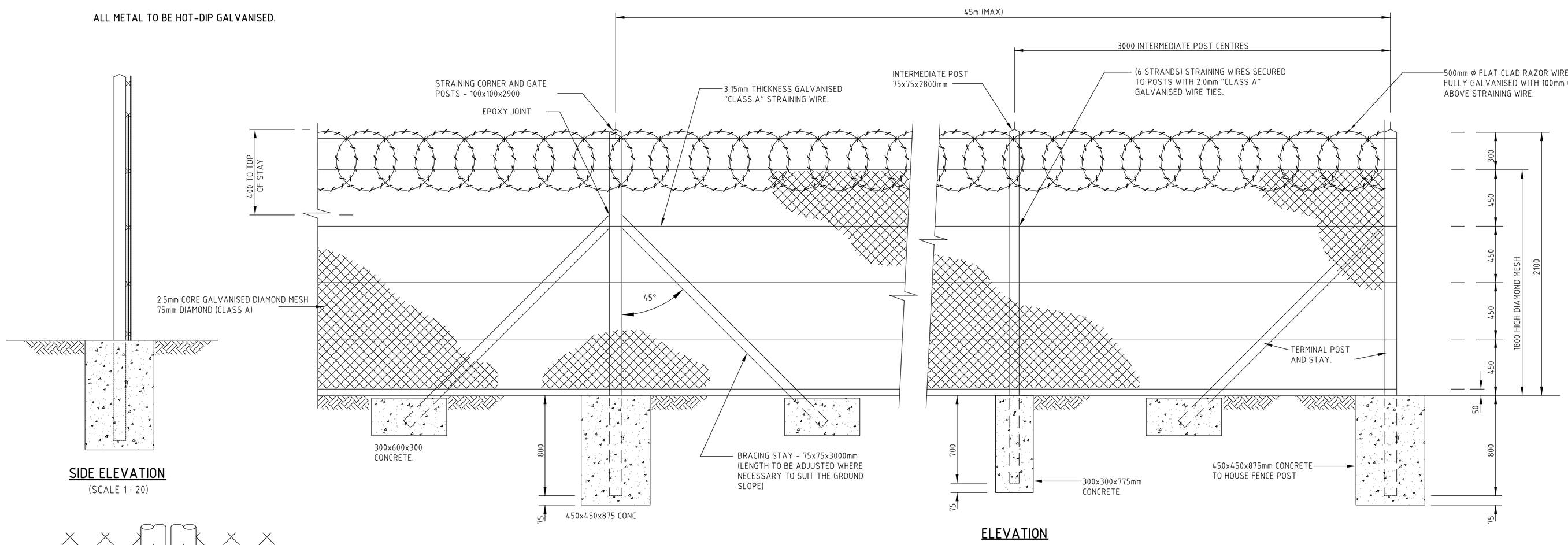

SIDE ELEVATION

(SCALE 1 : 20)

ELEVATION

DIAMOND RAZOR WIRE MESH FENCE

(SCALE 1 : 20)

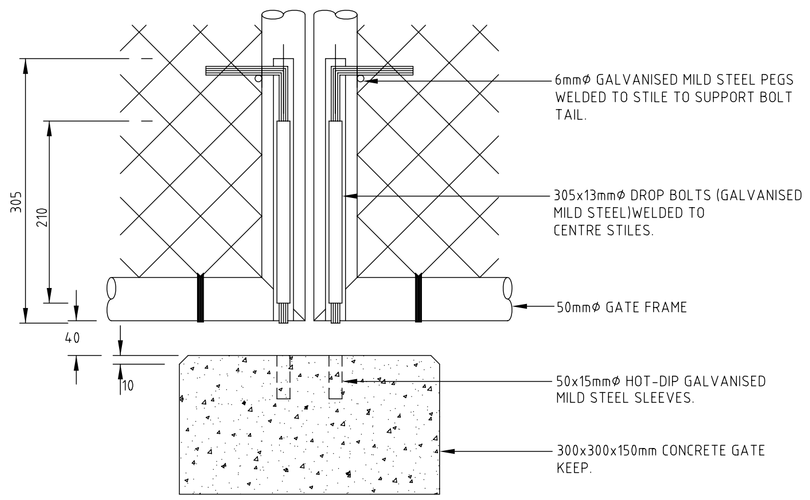

DETAIL E

(SCALE 1 : 5)

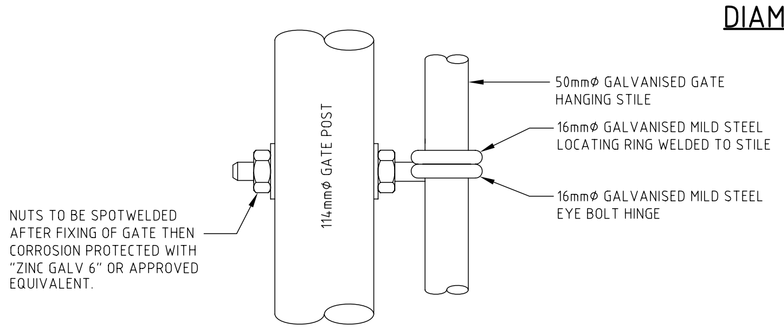

DETAIL F

(SCALE 1 : 5)

NOTE :

1. ALL PRE-STRESSED CONCRETE FENCE STAYS, END POSTS AND GATE POST TO CONSIST OF GRADE 40/13 PRE-STRESSED CONCRETE.
2. ALL METAL TO BE HOT-DIP GALVANISED AND YELLOW PASSIVATED.
3. ALL CONCRETE FOUNDATIONS TO BE GRADE 20/26

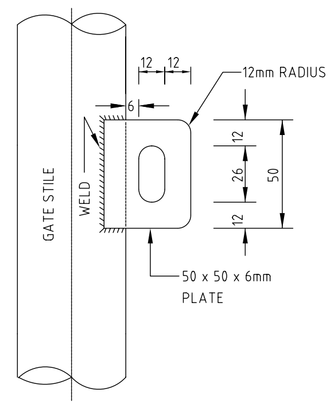

DETAIL G

(SCALE 1 : 2)

DURBAN METRO WATER SERVICES

WATER DESIGN BRANCH

Durban Metro

REDUCED PLAN USE SCALE BELOW

0 10 20 30 40 50 60 70

70mm ON ORIGINAL PLAN

LEGEND

EXISTING UNDERGROUND SERVICES ARE AS SHOWN BELOW.

SEWERS AND M.H'S
STORM WATER DRAINS AND M.H'S
WATER MAINS AND VALVES
ELECTRICITY CABLES
G.P.O TELEPHONE CABLES
OIL PIPELINES

Revision	Date	Description

NOTE: No construction work to commence until land and servitude acquisitions have been completed.

Acquisitions completed:

Date Engineer NORTH POINT

UNDERGROUND SERVICES CHECKED

SERVICE	DATE	SIGNATURE
S.W DRAINS		
SEWERS		
WATERMAINS		
G.P.O CABLES		
ELECTRIC CABLES		
S.A.R CABLES		
E.S.C CABLES		
OIL PIPE LINE		

NOTE: Only underground services affected by new construction are shown. Care must be taken during excavations for road foundations,trenches etc.to avoid damage to underground services such as sewers,drains,cables, watermains and connections.Wherever possible these must be located before work begins.

Contract No.

Project No.

Project Title

STANDARD DRAWING

Drawing Title

DIAMOND WIRE MESH FENCE

GATE DETAILS

Scales : AS SHOWN

Designed : R.K. Date : AUGUST 2000

Checked : Drawn : L.H.APPENAH

Area Manager : Water Operations

Manager (W.D.)

Director (Water)

N.A.Macleod – Executive Director

Drawing No. 68184 Sheet 1/1 Rev.

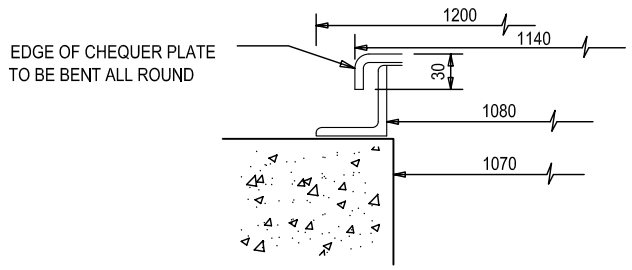

TYPICAL EDGE DETAIL

NTS

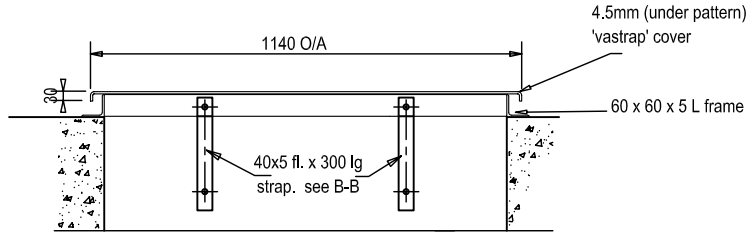

SECTION A-A

1:20

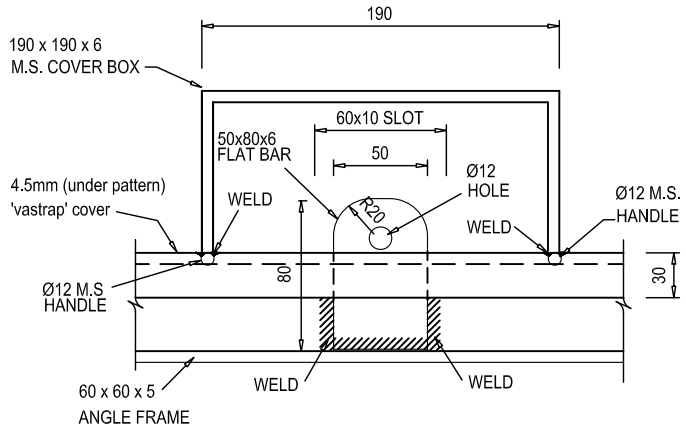

SECTION C-C

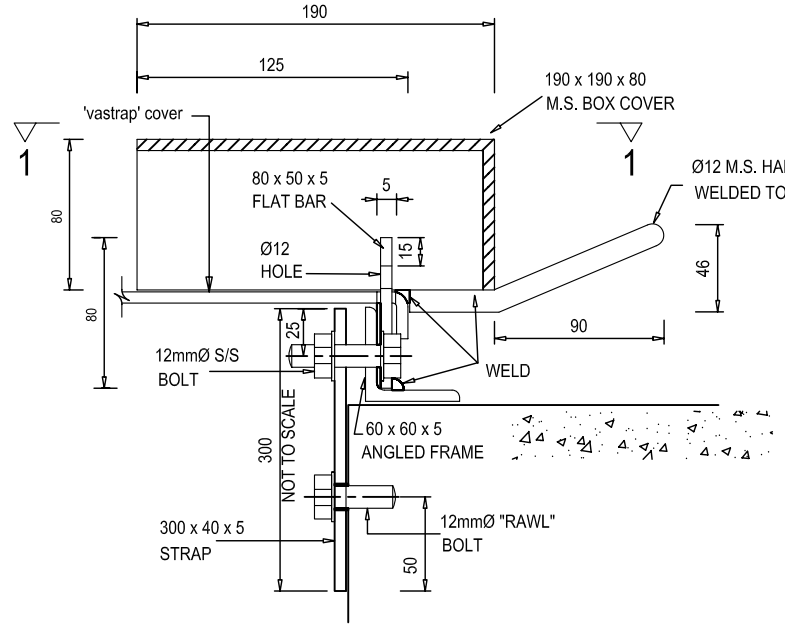

SECTION B-B

NOTES:

1. FRAME AND COVER TO BE HOT DIPPED GALVANISED TO SABS 763 AFTER FABRICATION AND THEN ASSEMBLED.
2. FISHTAIL LUGS OR BOLTS ARE OPTIONAL:
   WHERE FRAMES ARE TO BE FIXED TO EXISTING OR PRECAST UNITS, BOLTS MAY BE USED.
3. WHERE FRAMES ARE TO BE FIXED TO EXISTING OR ARE FIXED INTO IN-SITU CONCRETE, LUGS MAY BE PROVIDED.

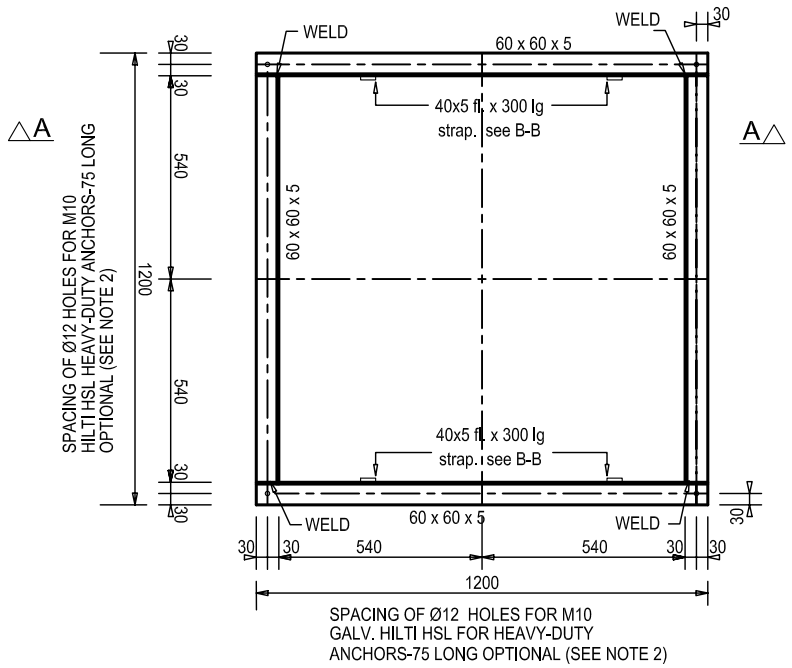

PLAN ON FRAME

1:20

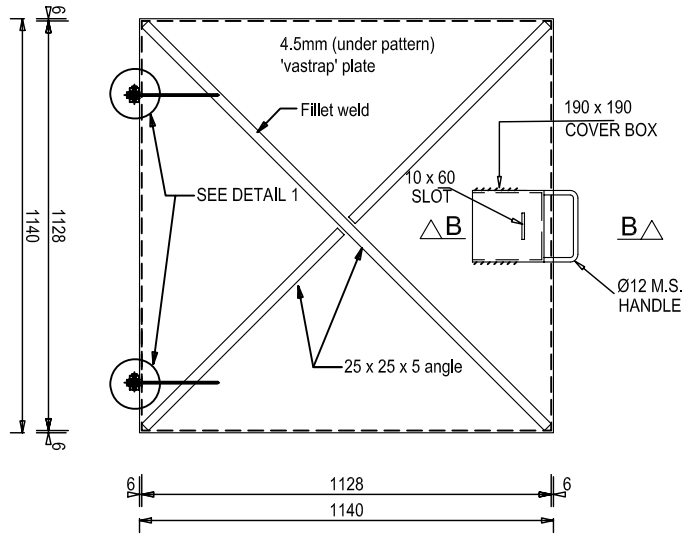

PLAN ON COVER

1:20

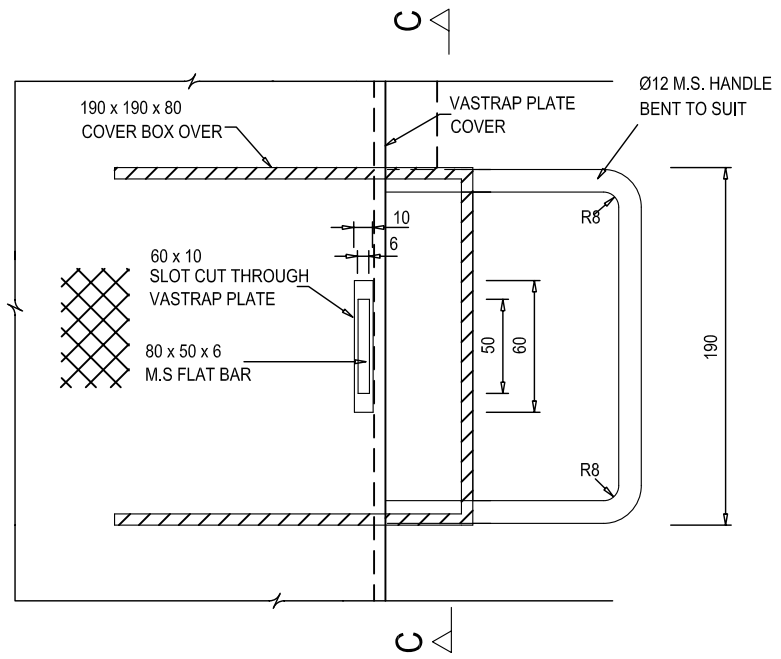

SECTIONAL PLAN 1-1

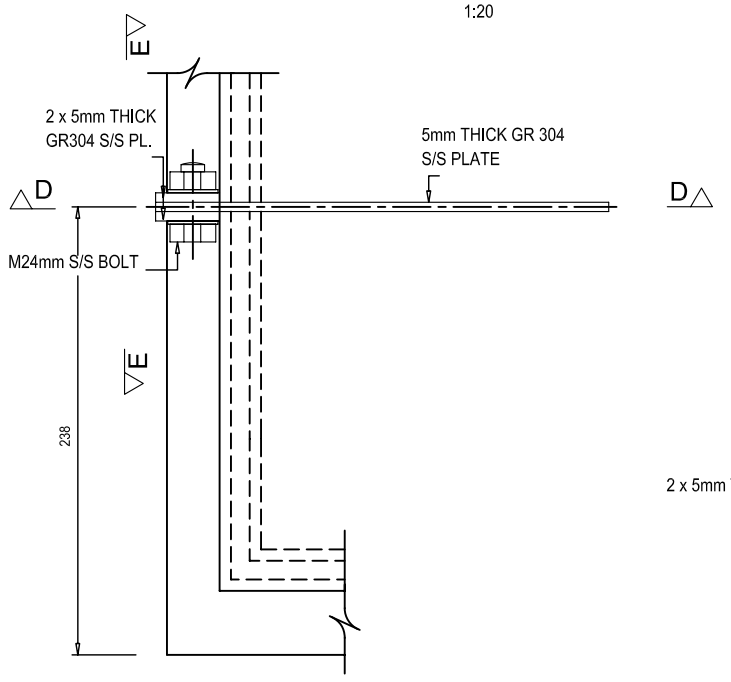

DETAIL 1

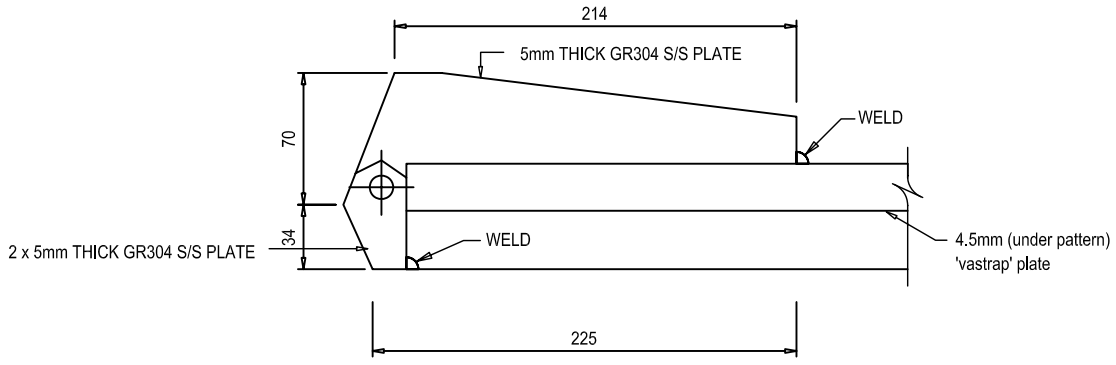

D - D

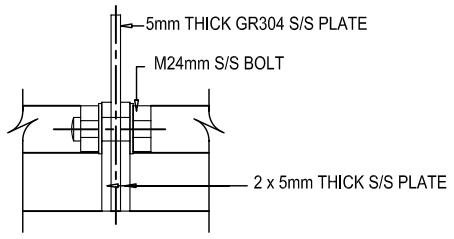

ELEV. E-E

ETHEKWINI
WATER SERVICES

WATER DESIGN BRANCH

REDUCED PLAN USE SCALE BELOW

0 10 20 30 40 50 60 70

70mm ON ORIGINAL PLAN

Revision	Date	Description
D	Apr 2012	Size of cover, frame and opening amended
C	July 2010	25 x 25 x 5 angle added to cover

NOTE:No construction work to commence until land and servitude acquisitions have been completed.

Acquisitions completed:

Date Engineer

NORTH POINT

UNDERGROUND SERVICES CHECKED

SERVICE	DATE	SIGNATURE
S.W DRAINS		
SEWERS		
WATERMAINS		
TELKOM CABLES		
ELECTRIC CABLES		
S.A.R CABLES		
E.S.C CABLES		
OIL PIPE LINE		

NOTE: Only underground services affected by new construction are shown. Care must be taken during excavations for road foundations,trenches etc.,to avoid damage to underground services such as sewers,drains,cables, watermains and connections.Wherever possible these must be located before work begins.

Contract No.

Project No.

Project Title

STANDARD DRAWING

Drawing Title

1200 x 1200 G.I. MANHOLE COVER AND FRAME

ARRANGEMENT & DETAILS

Scales : AS INDICATED

Designed : Date : SEPT. 2005

Checked : Drawn : S.R.

Area Engineer (W.O)

Manager (W.D.)

Director (Water)

N.A.Macleod - Executive Director

Drawing No. 68308 Sheet 1/1 Rev. D