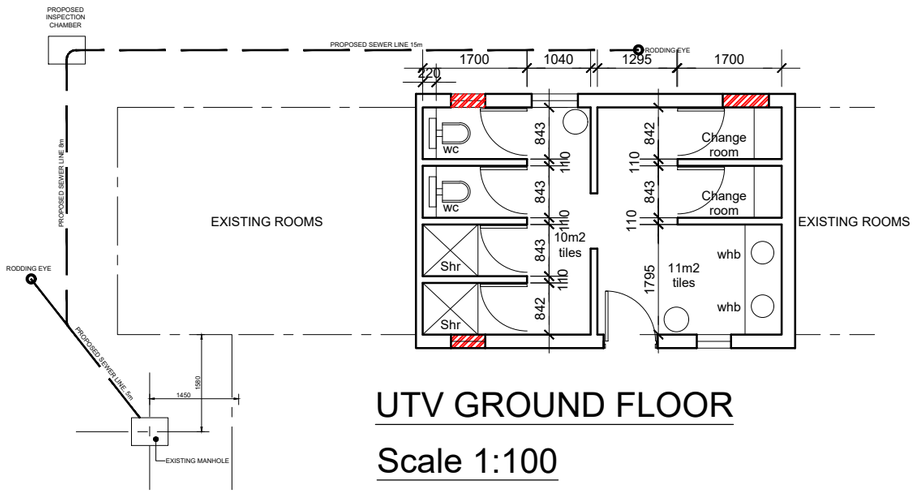

UTV GROUND FLOOR

Scale 1:100

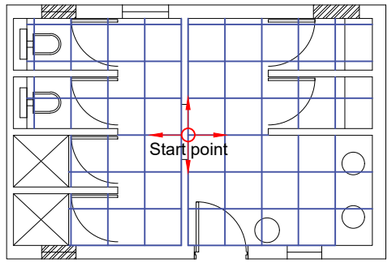

UTV Tiling layout

Scale 1:100

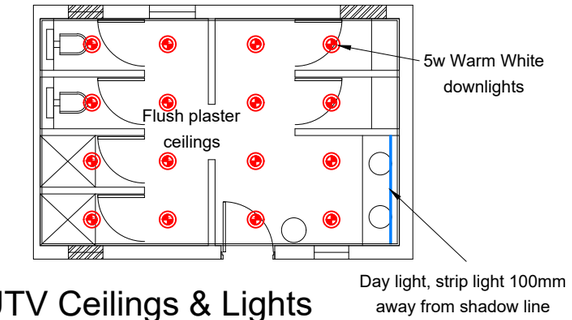

UTV Ceilings & Lights

Scale 1:100

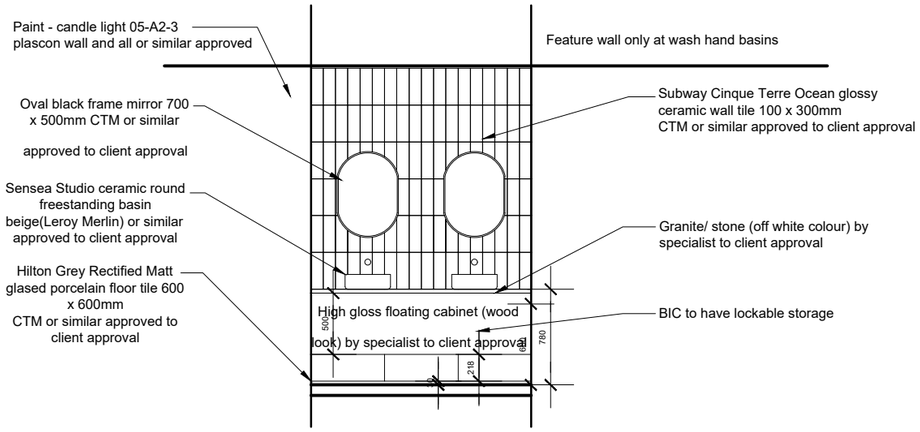

UTV - Front elevation of Basins

Scale 1:50

FOR INFORMATION

TECHI Engineers
PLOT 8
DANN ROAD
KEMPTON PARK AH,1619
Cell: +27 83 480 1305
Tell: +27 11 452 5114 :
E-mail: technical@techi.co.za

Drawing No. 2519-A-10

Pr. Arch. Number Approved 20958

Date 2025.12.07

REVISIONS			
REV No.	DESCRIPTION	DATE	APPROVED
A	ISSUED FOR INFORMATION	2025.09.18	
B	ISSUED FOR Tender	2025.10.09	

REFERENCE DRAWINGS	
DRG No.	DESCRIPTION

CLIENT APPROVAL			
NAME	DESIGNATION	SIGN	DATE

Client: SANBI Biodiversity for Life South African National Biodiversity Institute

Signature:

Date:

PROJECT DESCRIPTION

UPGRADES TO VARIOUS ABLUTION FACILITIES AT THE KIRSTENBOSCH NATIONAL BOTANICAL GARDEN

TITLE

UTV-GROUND FLOOR PLAN & DETAILS

A3

DRAWN:	DATE:	CHECKED:	DATE:	APPROVED:	DATE:	SCALE:	SECTION:	DRG.No:	REV:
A.A	2025.12.07	A.A	2025.12.07	A.A	2025.12.07	AS SHOWN	UTV	2519-A-09	A