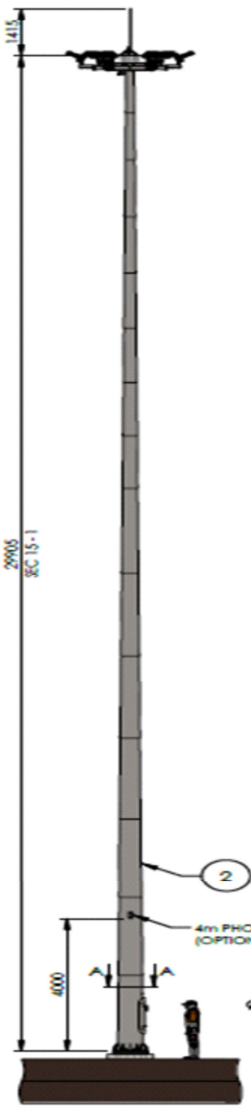

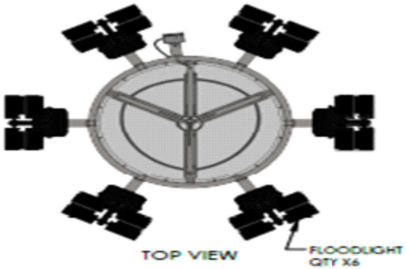

TOP VIEW

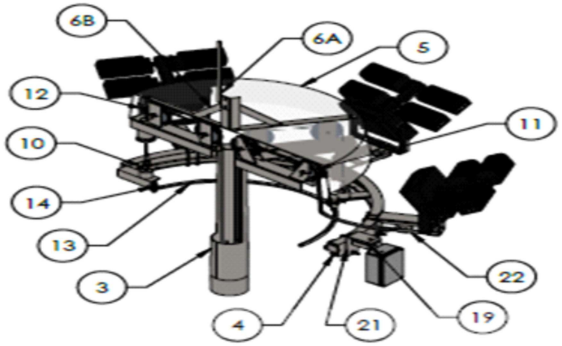

TOP VIEW SECTIONED

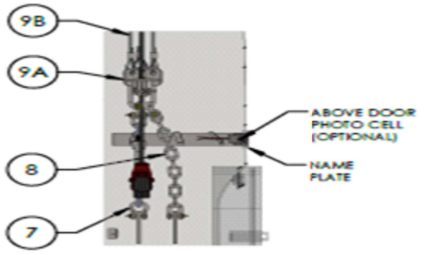

DETAIL B

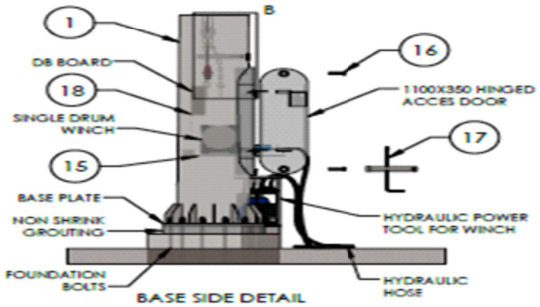

BASE SIDE DETAIL

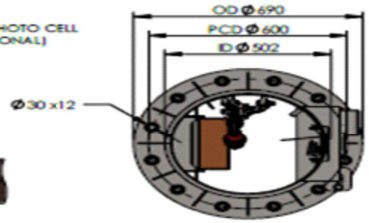

SECTION A-A
BASE TOP DETAIL
THK = 25mm

ITEM	DESCRIPTION	QTY
23	HLM BRACKET 400LG	0
22	HLM BRACKET 300LG	6
21	HLM LIGHT + S/BOX BRACKET	1
20	4m PHOTO CELL	1
19	SPLITTER BOX BACK PLATE	1
18	DB BACK PLATE	1
17	3-PIN SECURITY SPANNER	1
16	3-PIN SECURITY BOLT M24X65	2
15	WINCH BASE PLATE	1
14	GUIDE WHEEL POLLY PROP 63mm OD	3
13	PVC PIPE WITH 5m GALV WIRE	1
12	PULLY NARROW (S/S WIRE ROPE)	6
11	PULLY WIDE (TRAILING CABLE)	2
10	TENSION BOLT	3
9B	M6 S/S WIRE ROPE	3
9A	TENSION PLATE	1
9	HLM HARNESS	1
8	SAFETY CHAIN + 2X D-SH 12mm	1
7	TURNBUCKLE + 2X D-SH 12mm	1
6B	LIGHTING SPIKE HOLDER	1
6A	GENERAL LIGHTNING SPIKE 1.2m LG 16 R/BAR GALV MILD STEEL	1
5	FIBERGLASS HOOD	1
4	LAMP CAGE	1
3	HLM FREDCO TOP	1
2	SECTION 14 TO 2	1
1	BASE SECTION 15	1
0	F/BOLT M24X800 EN8	12

No.	REVISION DESCRIPTION			
		DRAWN	P.B	07/25
		CHECKED	S.M	07/25
		ENGINEER	S.M	07/25
		APPROVED	S.M	07/25
		ACCEPTED	S.M	07/25
A	ISSUED FOR TENDER	DRAWING SCALE:		DATE:
CAD No.				

Maquassi Hills Local Municipality

MAQUASSI HILLS DISTRICT MUNICIPALITY
19 KRUGER STREET
WOLMARANSSTAD
NORTH WEST PROVICE
SOUTH AFRICA

CLIENT

BOFFIN & FUNDI

OAKANTSWE CONSTRUCTION & PROJECTS (Pty) Ltd
BUILDING NO.3, MANHATTAN OFFICE PARK
16 PIETER STREET
HIGHVELD TECHNO PARK, CENTURION
0169

CONTRACT

MAQUASSI HILLS MUNICIPALITY
TOWNSHIP NAME???
HIGH MASTS LIGHTS DRAWINGS
COVER PAGE

VENDOR CADD No.:
CITY POWER CADD No.:

A3

03 OF 03
SHEET No.