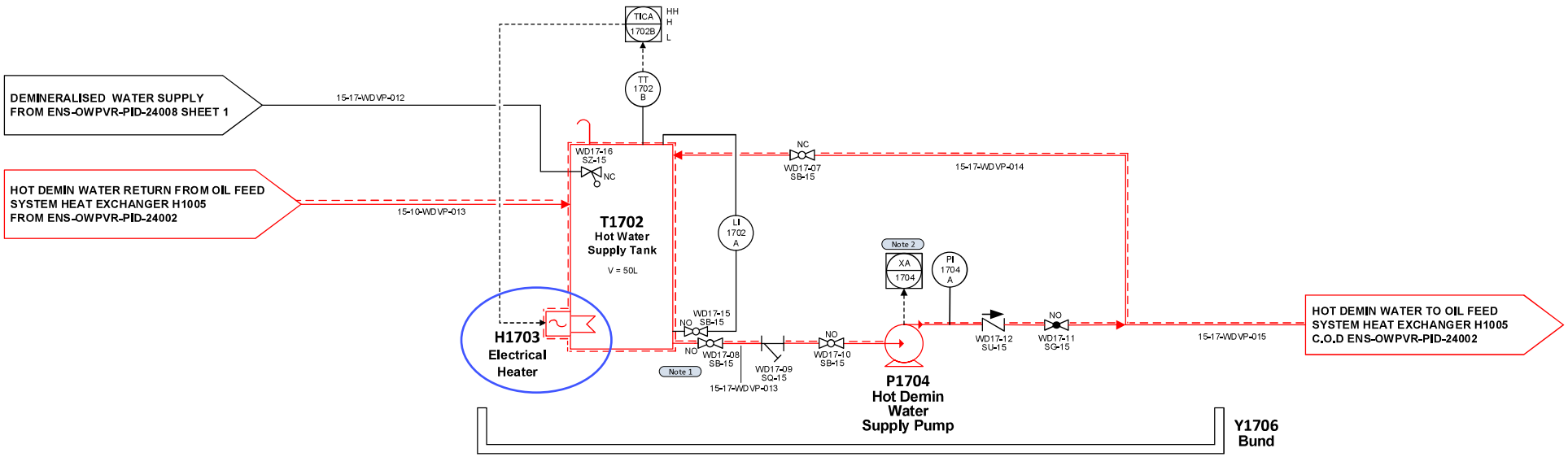

FUNCTION	NAME	DESIGNATION	SIGNATURE
PREPARED	Mr N Manilal	Process Engineer	
REVIEWED	Mr W Ludwick	Senior Process Engineer	
REVIEWED	Mr BM Khumalo	Senior Process Engineer	
REVIEWED	Mr SR Mngoma	Chief Engineer Mechanical	
REVIEWED	Dr G Manuel	Chief Engineer Control & Instrumentation	
REVIEWED	Mr WJ van den Berg	Chief Engineer Electrical	
APPROVED	Dr K Moodley	Chief Process Engineer	

REVISION HISTORY

REV	DESCRIPTION	PREPARED	DATE
2	Second Issue	W Ludwick	2024/10/28
3	Update after Control Review	P Dube	2024/11/26
4	Update after HAZOP 3 and aligned interlocks as per interlock schedule ENS-OWPVR-LST-24005 R1	P Dube	2025/01/22
5	Update after merger between NW PlasGas & WOPG Facilities	P Dube	2025/02/20
6	Update after HAZOP Close-out Report	N Manilal	2025/03/31

LIST OF REFERENCED P&IDs & DOCUMENTS

1) ENS-OWPVR-LST-24004 – Lead Sheet for the PFDs & P&IDs of the WOPG Demonstration Facility
2) ENS-OWPVR-PID-24002 – P&ID for the Oil Feed System of the WOPG Demonstration Facility

DESIGN NOTES TO SHEET 2:

1) Outlet pipe from Hot Water Supply Tank, T1702, to be located above the Electrical Heater, H1703, so that it stays submerged in water.
2) Centrifugal pump to be equipped with dry run protection.

necsa
We're in your world
South African Nuclear Energy Corporation SOC Limited

COPYRIGHT
This drawing is the property of Necsa and may not, without written permission, be copied, communicated to a third party, or be used either wholly or in part for any purpose other than for which it is supplied.

Classification: **CONFIDENTIAL**

PROJECT	URANIUM CONTAMINATED WASTE OIL PLASMA GASIFICATION
TITLE	P&ID – UTILITIES SYSTEM
DRG. NO.	ENS-OWPVR-PID-24008
DRAWN BY	N MANILAL
DATE	2025/03/31
	SHEET 2 OF 2

DESTROY ALL PREVIOUS PRINTS

6

REVISION