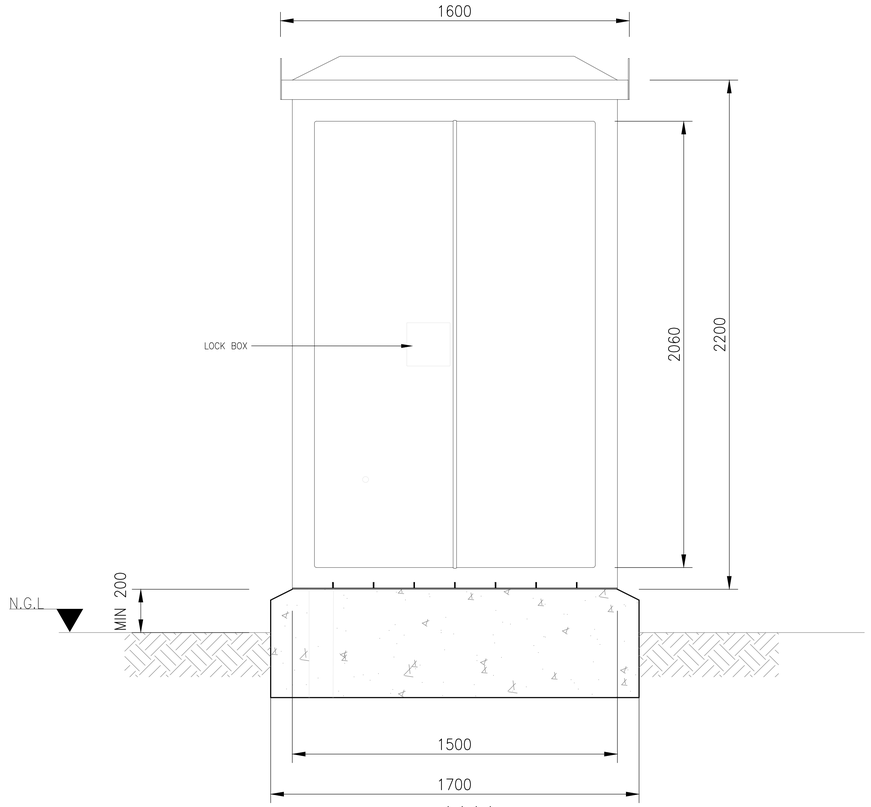

BACK VIEW
1:5

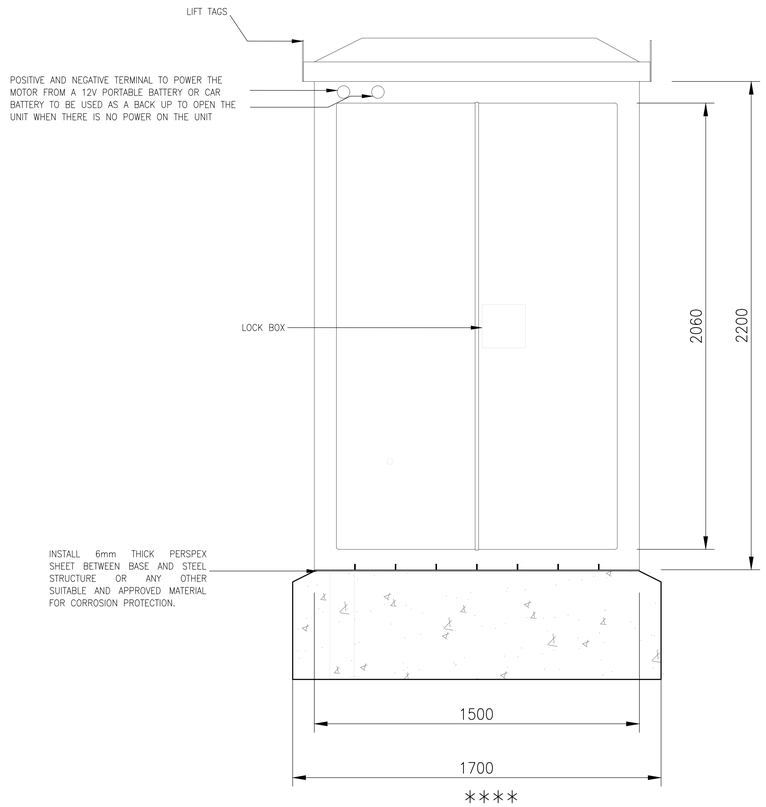

FRONT VIEW
1:5

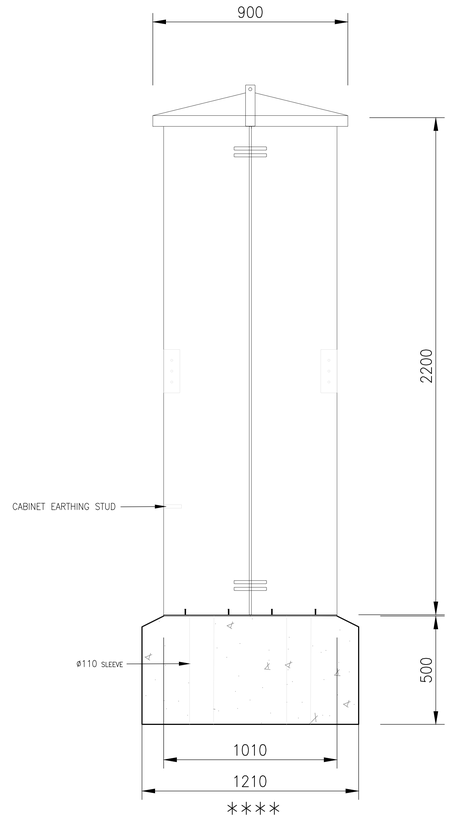

SIDE VIEW
1:5

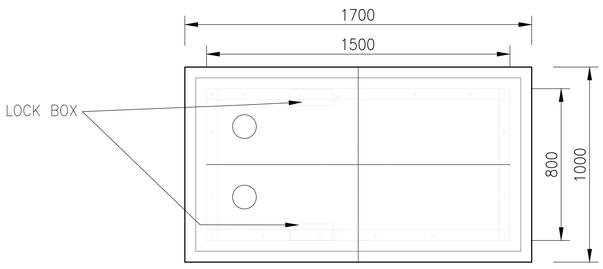

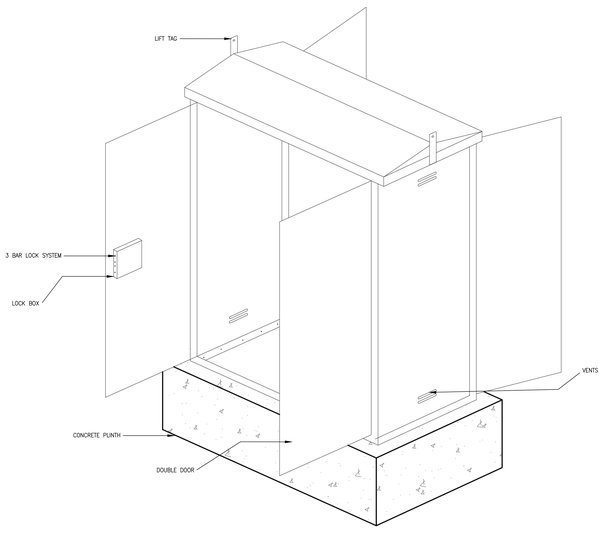

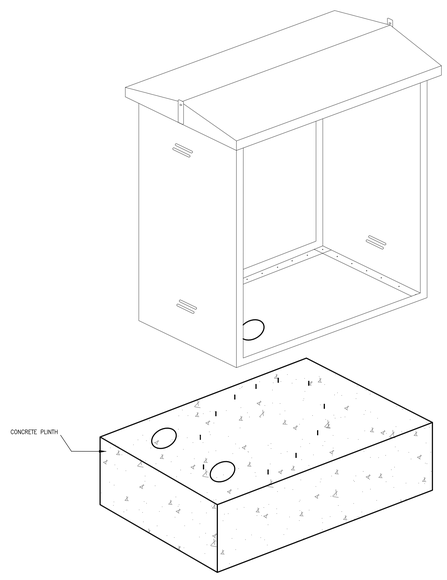

DRG No. RO 509995

GENERAL NOTES

1. THIS DRAWING SHALL BE READ IN CONJUNCTION WITH THE LATEST RAND WATER CATHODIC PROTECTION SYSTEM TECHNICAL SPECIFICATION.
2. STRUCTURE TO BE CONSTRUCTED IN ACCORDANCE WITH SANS 10100 AND RAND WATER SPECIFICATIONS.
3. ALL CONCRETE MIXES AND METHOD STATEMENTS TO BE APPROVED BY THE CIVIL DESIGN ENGINEER PRIOR TO COMMENCEMENT OF CONSTRUCTION.
4. FOUNDATION EXCAVATIONS TO BE APPROVED BY THE CIVIL DESIGN ENGINEER PRIOR TO CASTING OF THE BLINDING LAYER.
5. ALL LEVELS AND DIMENSIONS WILL BE CHECKED ON SITE PRIOR TO CONSTRUCTION.
6. PREPARATION OF THE FOUNDATION AREA AND COMPACTION TO BE CARRIED OUT AS DESCRIBED IN TS019.
7. THE RECTIFIER STEEL STRUCTURE TO BE SECURED TO THE CONCRETE BASE USING ø16mm OR LARGER ANCHOR BOLTS CAST INTO THE BASE AND FASTENED. BOLTS SHALL BE LONG ENOUGH ANCHOR THE STEEL CABINET AND PERSPEX TO THE BASE.
8. CORROSION PROTECTION MEASURES

CONCRETE NOTES

1. CONCRETE STRENGTH REQUIRE AT 28 DAYS;
   a. ALL STRUCTURAL CONCRETE: 40 MPa
   b. BLINDING AND SCREED: 15MPa
2. MAXIMUM COARSE AGGREGATE SIZE SHALL BE 19mm.
3. CURING OF CONCRETE SHALL BE CARRIED OUT STRICTLY IN ACCORDANCE TO SAB 1200G.
4. CURING METHOD STATEMENT TO BE APPROVE BY CIVIL DESIGN ENGINEER.
5. ONLY CONCRETE COVER BLOCKS TO BE USED ON SITE.
6. ALL EXPOSED SHARP EDGES TO HAVE 25 X25mm CHAMFER.
7. CONCRETE FINISHES TO FLOOR TO HAVE A SMOOTH WOOD FLOATED FINISH.
8. ALL CAST IN ITEMS TO BE SUPPLIED BY CONTRACTOR UNLESS OTHERWISE NOTED.
9. PRIOR TO STEEL CABINET INSTALLATION, EXCAVATE, PREPARE THE FOUNDATION AREA AN COMPACT IT AS DESCRIBED IN S019.
10. THE SLAB SHALL HAVE THE DIMENSIONS 6,5m LONG BY 2.5m WIDE AND 250mm THICK.
11. 110mm DIAMETER CABLE DUCTS SHALL BE INSTALLED SUCH THAT AC CABLE MAY BE BROUGHT TO THE ISOLATOR BOX MOUNT ON THE INSIDE FLOOR OF THE STEEL CABINET (THIS DUCT SHALL EXTEND TO THE EDGE OF THE SLAB) AND THEN FROM THE ISOLATOR TO A POSITION UNDER THE TRU. IN ADDITION A SEPARATE 110mm DIAMETER CABLE DUCT SHALL BE INSTALLED SUCH THAT THE POSITIVE, NEGATIVE, REFERENCE MONITOR AN EARTHING CABLES MAYBE BROUGHT TO A POINT WA THE TRUFRAME (THIS DUCT SHALL EXTEND TO THE EDGE OF THE SLAB)
12. REINFORCEMENT MESH OF 200mm BY 60mm SHALL BE INSTALLED INSIDE THE FOUNDATION.
13. THE CONTRACTOR SHALL PAINT THE CONCRETE STEEL CABINET AS PER SANS 731-2:2006.
14. THE GROUND AROUND THE FOUNDATION SHALL BE PROPERLY COMPACTED SO THAT IT DOES NOT CAVE I ONCE THE STEEL CABINET HAS BEEN PLACED. THE FOUNDATION SHOULD BE LEVEL SO AS TO ALLOW FREE MOVEMENT OF THE STEEL CABINET WHEN OPENING AND CLOSING.

STEEL CABINET NOTES

1. THE STEEL STRUCTURE MUST BE MADE OUT 6MM THICK MILD STEEL.
2. THE STEEL STRUCTURE MUST HAVE A POWDER COATED FINISH.
3. MOTOR DRIVEN 3 BAR LOCKING SYSTEM TO BE USED LOCK THE STEEL STRUCTURE.
4. PRIOR TO RECTIFIER STEEL STRUCTURE INSTALLATION, EXCAVATE, PREPARE THE FOUNDATION AREA, AND COMPACT IT AS DESCRIBED IN TS01.
5. ALL SHALL EXPOSED SHARP EDGES TO HAVE 25 X25MM CHAMFER.
6. STEEL STRUCTURE TO BE HOT-ROLL GALVANIZED AS A CORROSION PREVENTION MEASURE.
7. MAKE PROVISION POSITIVE AND NEGATIVE ALTERNATIVE 12V POWER POINT FOR THE MOTOR TO OPEN AND CLOSE THE UNIT IN CASE OF POWER FAILURE.
8. PROVISION FOR SUFFICIENT EARTHING CABLE CONNECTION POINTS (WELD A STUD FOR CONNECTION) WITHIN THE ENCLOSURE'S BASE TO BE INCLUDED DURING THE MANUFACTURING PROCESS TO ALLOW FOR CONNECTION TO THE INSTALLATION'S EARTH MAT

REVISIONS

No	DATE	CHECKED	APPROVED	DESCRIPTION

REFERENCE DRAWINGS

NUMBER	TITLE

RAND WATER
BOX 1127
JOHANNESBURG
2000
TEL: 011-682-0911

© RAND WATER 2004 All Rights Reserved

SAP No.		CHECKED BY	
CONTRACT No.		D.O.M. C. TAMBWE	
DESIGNED BY		APPROVED ..... Pr Eng	
DRAWN BY	TJ.SELEKE	REG. No.	
DATE	JAN 2023	DATE	

STANDARD DRAWING

FOR RECTIFIER STEEL STRUCTURE

STATION | WKS | DOC. TYPE | S

AS SHOWN

DRG No. RO 50995

REVISION 0

C:\Users\tselek\OneDrive - Rand Water\Documents\CP Drawings\CP Drawings.dwg | TSHOLOFELO SELEKE | 2023/04/14 09:24:39