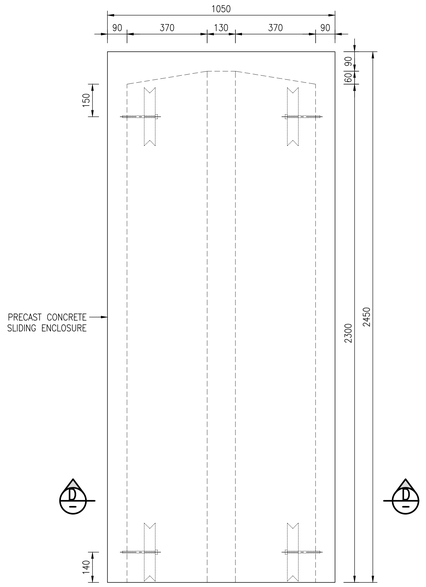

SLIDING ENCLOSURE ROOF LAYOUT
SCALE 1:10

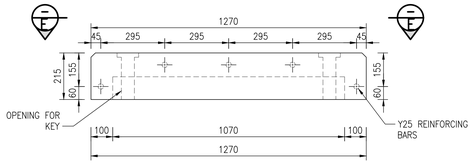

SLIDING ENCLOSURE STOPPER
SCALE 1:10

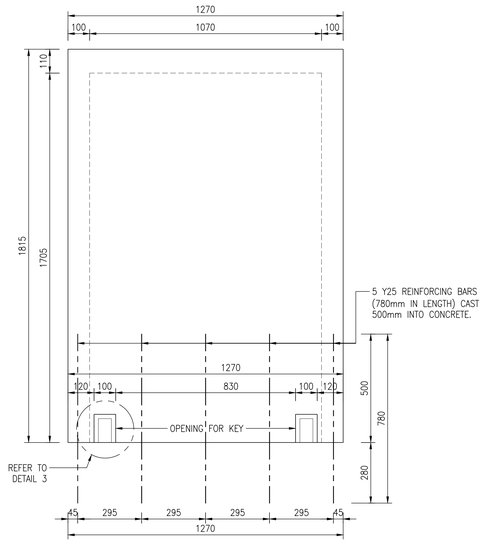

SECTION E-E
SCALE 1:10

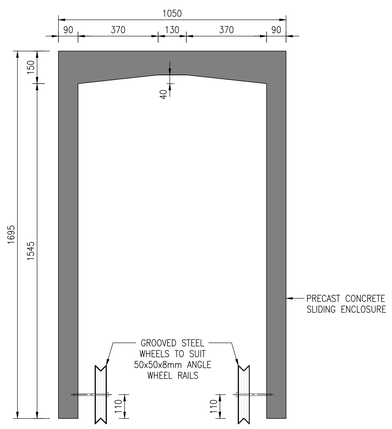

SECTION D-D
SCALE 1:10

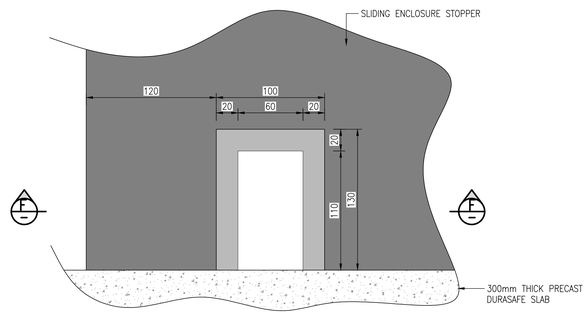

DETAIL 3
SCALE 1:2

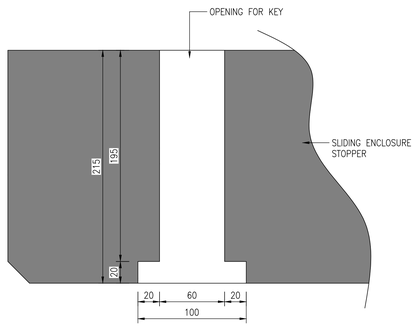

SECTION F-F
SCALE 1:2

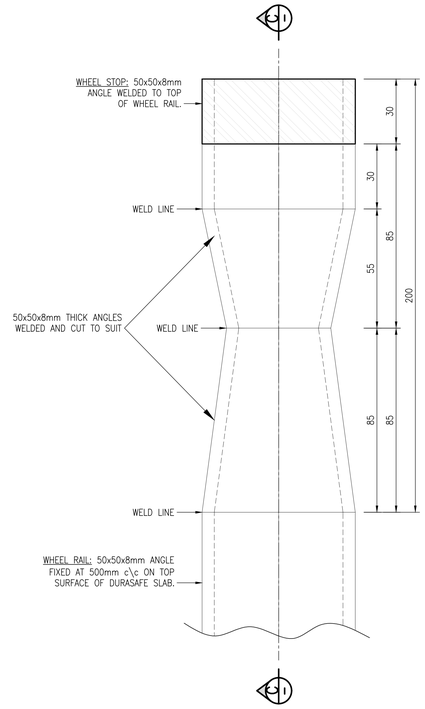

DETAIL 2
SCALE 1:1

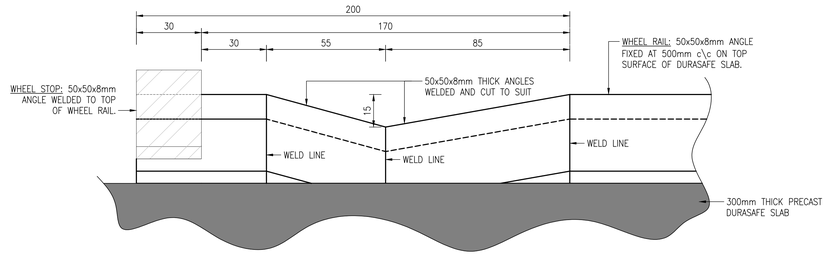

SECTION C-C
SCALE 1:1

DRG No. R0?????

GENERAL NOTES:

1. THIS DRAWING SHALL BE READ IN CONJUNCTION WITH THE RAND WATER CATHODIC PROTECTION SYSTEM TECHNICAL SPECIFICATION REVISION 7.4
2. STRUCTURE TO BE CONSTRUCTED IN ACCORDANCE WITH SANS SPECIFICATIONS AND RAND WATER SPECIFICATIONS.
3. ALL CONCRETE MIXES AND METHOD STATEMENTS TO BE APPROVED BY THE CIVIL DESIGN ENGINEER PRIOR TO COMMENCEMENT OF CONSTRUCTION
4. FOUNDATION EXCAVATIONS TO BE APPROVED BY THE CIVIL DESIGN ENGINEER PRIOR TO CASTING OF THE BLINDING LAYER
5. ALL LEVELS AND DIMENSIONS WILL BE CHECKED ON SITE PRIOR TO CONSTRUCTION
6. PREPARATION OF THE FOUNDATION AREA AND COMPACTION TO BE CARRIED OUT AS DESCRIBED IN TS019.

CONCRETE NOTES:

1. CONCRETE STRENGTH REQUIRED AT 28 DAYS:
   a) ALL STRUCTURAL CONCRETE: 35 MPa
   b) BLINDING AND SCREED: 15 MPa
2. MAXIMUM COARSE AGGREGATE SIZE SHALL BE 19mm.
3. CURING OF CONCRETE SHALL BE CARRIED OUT STRICTLY IN ACCORDANCE WITH SABS 1200G
4. CURING METHOD STATEMENT TO BE APPROVED BY CIVIL DESIGN ENGINEER
5. ONLY CONCRETE COVER BLOCKS TO BE USED ON SITE
6. ALL EXPOSED SHARP EDGES TO HAVE 25 x 25mm CHAMFER
7. CONCRETE FINISHES TO FLOOR TO HAVE A SMOOTH WOOD FLOATED FINISH
8. ALL CAST IN ITEMS TO BE SUPPLIED BY CONTRACTOR UNLESS OTHERWISE NOTED.
9. PRIOR TO DURASAFE INSTALLATION, EXCAVATE, PREPARE THE FOUNDATION AREA AND COMPACT IT AS DESCRIBED IN TS019.
10. THE SLAB SHALL HAVE DIMENSIONS 6.5m LONG BY 2.5m WIDE AND 250mm THICK.
11. 110mm DIAMETER CABLE DUCTS SHALL BE INSTALLED SUCH THAT AC CABLE MAY BE BROUGHT TO THE ISOLATOR BOX MOUNTED ON THE INSIDE FLOOR OF THE DURASAFE (THIS DUCT SHALL EXTEND TO THE EDGE OF THE SLAB) AND THEN FROM THE ISOLATOR TO A POSITION UNDER THE TRU. IN ADDITION A SEPARATE 110MM DIAMETER CABLE DUCT SHALL BE INSTALLED SUCH THAT POSITIVE, NEGATIVE, REFERENCE, MONITOR AND EARTHING CABLES MAY BE BROUGHT TO A POSITION VIA THE TRU FRAME (THIS DUCT SHALL EXTEND TO THE EDGE OF THE SLAB).
12. REINFORCEMENT MESH 200mm BY 6mm SHALL BE INSTALLED INSIDE THE FOUNDATION
13. THE CONTRACTOR SHALL PAINT THE CONCRETE DURASAFE AS PER SANS 731-2:2006.
14. THE GROUND AROUND THE FOUNDATION SHOULD BE PROPERLY COMPACTED SO THAT IT DOES NOT CAVE IN ONCE THE DURASAFE HAS BEEN PLACED. THE FOUNDATION SHOULD BE LEVEL SO TO ALLOW FREE MOVEMENT OF THE DURASAFE WHEN OPENING AND CLOSING.

REVISIONS

No	DATE	CHECKED	APPROVED	DESCRIPTION

REFERENCE DRAWINGS

NUMBER	TITLE

RAND WATER
BOX 1127
JOHANNESBURG
2000
TEL: 011-682-0911

© RAND WATER 2004 All Rights Reserved

SAP No.	P.03555	CHECKED BY	T. Phutha
CONTRACT No.	RW01113/14	D.O.M. c. TUMBARE	
DESIGNED BY		APPROVED	Pr Tech
DRAWN BY	K. SUKKHU	REG. No.	
DATE	10-06-2016	DATE	

PRECAST
DURASAFE ENCLOSURE

GENERAL ARRANGEMENT

STATION	WKS	DOC. TYPE	S
- -	X X X X	D C X	A

SCALE 1:10, 1:2, 1:1

DRG No. R0?????

REVISION 0