CIVIL

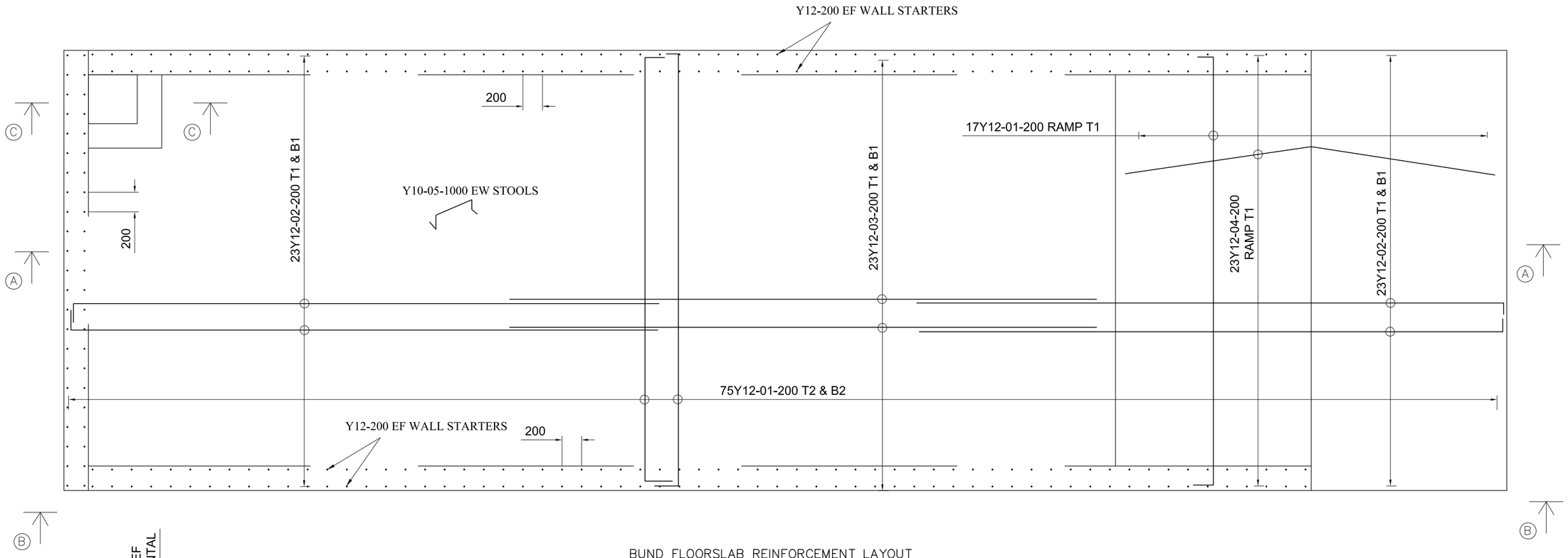

BUND FLOORSLAB REINFORCEMENT LAYOUT

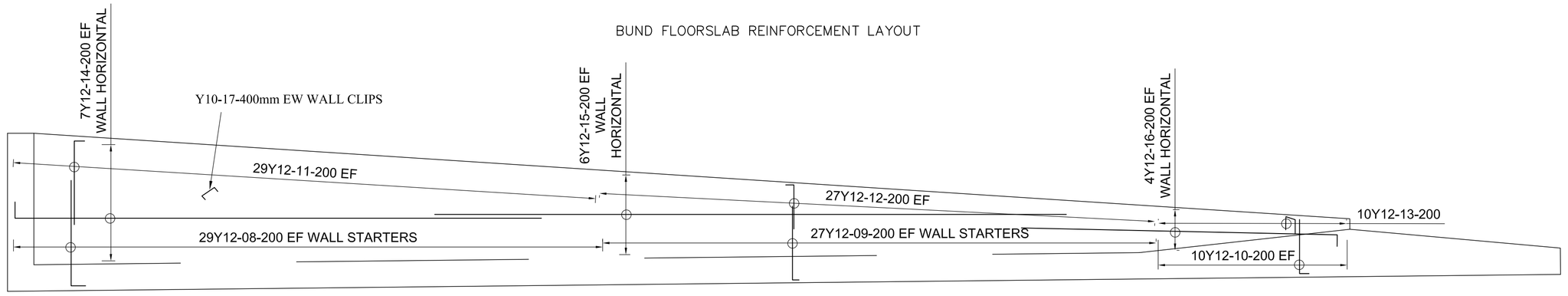

VIEW B–B – BUND SIDE WALL (SAME FOR OTHER SIDE)

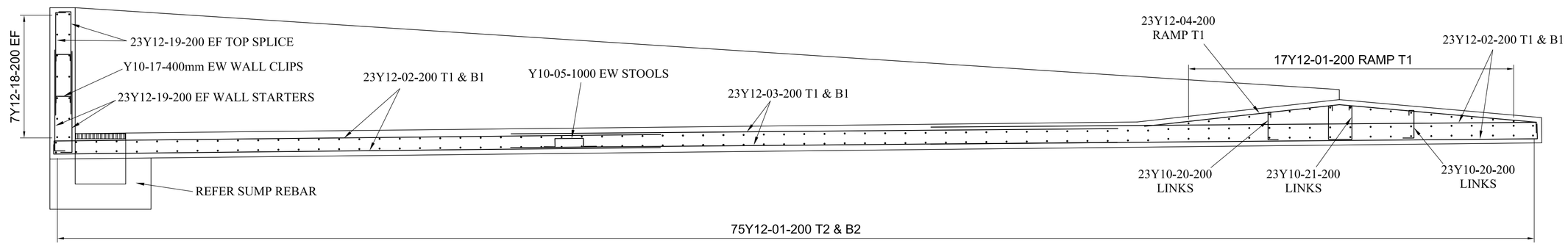

BUND FLOOR SECTION A–A

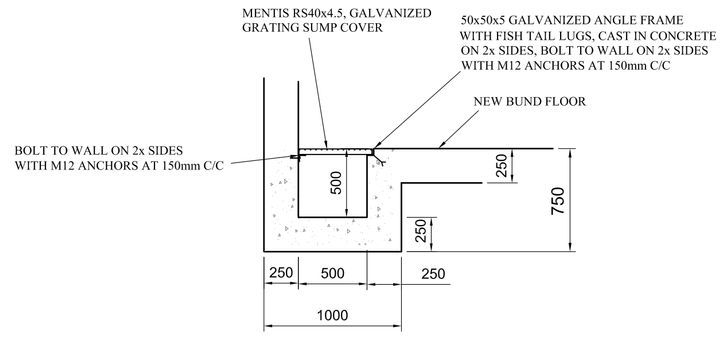

SECTION C-C - SUMP
(x5 NUMBER OFF)

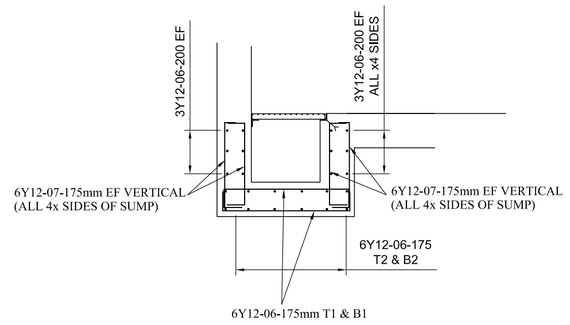

SECTION C-C SUMP REINFORCEMENT
(x5 NUMBER OFF)

MEMBER	NO OFF	BAR MARK	DIA.	BARS / MEMBER	TOTAL NO.	CUT LENGTH	SHAPE CODE	BENDING A	B	C	D	E/r
KOH TANKER BUND	1	01	Y12	167	167	4600	35	4400				
		02	Y12	92	92	6100	34	6000				
		03	Y12	46	46	6000	20	6000				
		04	Y12	23	23	3900	62	1950	385			
		05	Y10	50	50	700	83	250	130	100		
		06	Y12	48	48	1100	35	900				
		07	Y12	48	48	850	35	650				
		08	Y12	116	116	1100	34	1000				
		09	Y12	108	108	800	34	700				
		10	Y12	40	40	575	34	475				
		11	Y12	116	116	900	34	800				
		12	Y12	108	108	600	34	500				
		13	Y12	40	40	350	35	150				
		14	Y12	28	28	5100	34	5000				
		15	Y12	24	24	6000	20	6000				
		16	Y12	16	16	3600	34	3500				
		17	Y10	140	140	350	35	150				
		18	Y12	14	14	4600	35	4400				
		19	Y12	92	92	1100	34	1000				
		20	Y10	46	46	500	85	100	270	80		
		21	Y10	23	23	1160	72	340	220			

High tensile steel (Y) mass for schedule **2497** kg
Mild steel (R) mass for schedule **0** kg

TOTAL MASS **2497** kg

R = Mild steel bars (250 Mpa)
Y = Deformed high tensile steel bars (450MPa)

All reinforcement and bending to SANS 920 & SANS 282
All dimensions in schedule are outer dimensions

GENERAL CIVIL WORK NOTES:

ALL WORK IS TO BE EXECUTED IN ACCORDANCE WITH THE PROVISIONS OF SANS 2001-PART CC1 : CONCRETE WORKS (STRUCTURAL)

1. EARTH WORKS :

1.1 IN-SITU SOIL UNDER NEW SUMP TO BE COMPACTED TO 95% MOD AASHTO

2. CONCRETE AND REINFORCEMENT

2.1 ALL CONCRETE : 30 MPa / 19mm STONE UNLESS OTHERWISE NOTED

2.2 MINIMUM CONCRETE COVER TO REINFORCEMENT:

- BUND SURFACE BED, FLOOR : 40mm
- BUND WALLS : 30mm

2.3 CURING : ALL CONCRETE TO BE CURED BY KEEPING CONCRETE SURFACES WET FOR A MINIMUM OF 7 DAYS.

4. FORMWORK

4.1 ALL EXPOSED CORNERS ARE TO BE PROVIDED WITH 20x20 CHAMFER AT 45 DEGREES

4.2 EXPOSED SURFACE FINISH : SMOOTH STEEL FLOAT

5.0 REINFORCEMENT MINIMUM OVERLAP LENGTH = 50 x BAR DIAMETER

COPYRIGHT

THIS DRAWING IS THE PROPERTY OF NECSA. BY SIGNING ACCEPTANCE OF THE DRAWING TRANSMITTAL SHEET THE USER ACKNOWLEDGES THIS.

THE USER UNDERTAKES TO CONSIDER ANY INFORMATION CONTAINED IN THIS DRAWING AS CONFIDENTIAL.

THEREFORE THE USER UNDERTAKES NOT TO COPY, DISCLOSE OR SEND ANY CONFIDENTIAL INFORMATION TO A THIRD PARTY WITHOUT NECSA's PRIOR WRITTEN CONSENT.

ALL CONFIDENTIAL INFORMATION IN TANGIBLE FORM OF EXPRESSION WHICH HAS BEEN DISCLOSED TO OR THEREAFTER CREATED, WHETHER BY COPY OR REPRODUCTION, SHALL BE AND REMAIN THE PROPERTY OF NECSA.

REV	DESCRIPTION	CHK'D	DATE
1.0	ISSUED FOR APPROVAL	PBvA	2025/11/13

REFERENCE DRAWINGS:

CLIENT ACCEPTANCE APPROVAL OF DRAWING			
DISCIPLINE	NAME	SIGNED	DATE
FACILITY OWNER :			
PREPARED :	PB VAN ASWEGEN		2025-11-13
PR ENG APPROVED :	PB VAN ASWEGEN		2025-11-13
REVIEWER :	SIBONGELENI MNGOMA		
REVIEWER :			
REVIEWER :			
REVIEWER :			

APPROVED BY PROFESSIONAL ENGINEER

Pieter-Ben van Aswegen
Pr. Eng 20020227, M Eng (Structural)

2025-11-13

DATE

ORIGINAL SCALE: AS SHOWN ON VIEW

DRAWN PBvA

CHECKED

necsa We're in your world
P O Box 582: PRETORIA; 0001
Elias Motsoaledi St West R104 Pelindaba
BRITS Magisterial District North West Province 2025
Tel: 012 - 305 4911 Fax: 012 - 305 3111

V-H BUILDING

PROJECT:

KOH WASTE ROAD TANKER TRAILER LOADING BUND
V-H BUILDING

BUND REINFORCEMENT DETAILS

LAST UPDATE 2025/11/13

DATE CREATED 2025/11/13

A1

1.0 REVISION

DRG. NO: KOH-CB-002

TEAMCENTER No: