TYPICAL WALL 0.0m TO 2.0m HIGH
Scale 1 : 50

BASE TYPE A
1 : 20

TYPICAL GABION WALL UP TO 3,0m
Scale 1 : 75

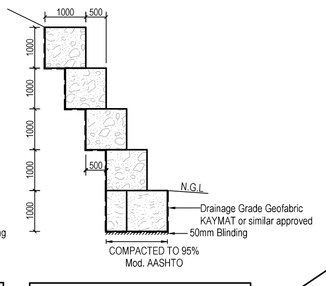

TYPICAL GABION WALL OVER 3,0m
Scale 1 : 75

RETAINING WALL NOTES :

1. BLOCK TYPE : GEOLOK BLOCKS OR SIMILAR APPROVED BLOCKS TO BE SANS 508:2012 CERTIFIED.
2. ALL FOUNDATION TRENCHES TO BE APPROVED BY THE ENGINEER ON SITE PRIOR TO CASTING OF CONCRETE.
3. BOTTOM ROW OF BLOCKS TO BE PLACED WHILE THE BASE CONCRETE IS STILL WORKABLE.
4. FILL BEHIND WALL TO BE COMPACTED TO 95% Mod. AASHTO AND AS PER PART D2 OF eTHEKWINI'S STANDARD ENGINEERING SPECIFICATIONS (YELLOW PAGES). BENCHING OF EXISTING AND/OR CUT SLOPES MAY BE REQUIRED WHERE NECESSARY.
5. CONCRETE IN WALL BASE - GR. 25/26 OR AS SPECIFIED
6. CEMENT STABILISED FILL - 12:1 CLEAN COARSE SAND - CEMENT , WELL RAMMED BETWEEN BLOCKS, IN BLOCKS AND 500mm BEHIND BLOCKS AS DETAILED.
7. MINIMUM OF 8 BLOCKS TO BE LAID PER SQ.M. (OR AS PER THE MANUFACTURES SPECIFICATION).
8. CONTRACTOR TO MAKE ALLOWANCE FOR +/- 73mm "STEP BACK" WITH EACH 200mm STEP UP WHEN SETTING OUT THE BASE. (OR AS PER THE MANUFACTURES SPECIFICATION).
9. CONTRACTOR TO REFER TO DETAILED SURVEY DRAWINGS FOR THE LOCATION OF SERVICES, PROPERTY BOUNDARIES ETC.
10. LEVELS AND DIMENSIONS INDICATED ON THIS DRAWING ARE ONLY A GUIDE AND THESE NEED TO BE CONFIRMED BY THE ENGINEER ON SITE.
11. POSITION OF RETAINING WALLS TO BE CONFIRMED BY ENGINEER ON SITE.
12. ALL RETAINING WALLS AS PER STRUCTURES DEPARTMENT DETAILS (ISSUED SEPARATELY IF REQUIRED).

GABION BASKET NOTES:

1. THE GABION DESIGN SHOWN IS TYPICAL. EACH APPLICATION OF GABION BOXES SHALL BE DESIGNED BY THE PLANNING OR ENGINEER TO SUIT THE SPECIFIC CONDITIONS PREVAILING.
2. FOUNDATIONS TO BE STEPPED AND PREPARED AS INSTRUCTED BY THE ENGINEER.
3. GEOTEXTILE FABRIC TO BE GRADE C OR SIMILAR AS INSTRUCTED BY THE ENGINEER.
4. ALL WIRE USED IN THE MAKING OF GABIONS SHALL BE GALVANISED IN ACCORDANCE WITH THE PROVISIONS SABS 1580:1993 FOR CLASS A HEAVY GALVANISED MILD-STEEL WIRE.
5. THE STANDARD SIZES OF GABIONS ARE AS FOLLOWS :
   LENGTH : 1.0m , 2.0m , 3.0m & 4.0m
   WIDTH : 1.0m & 1.5m
   DEPTH : 0.5m & 1.0m
   DIAPHRAGM SPACING : 1.0m
6. LACING AND BRACING TO BE DONE IN ACCORDANCE WITH MANUFACTURES RECOMMENDATIONS.

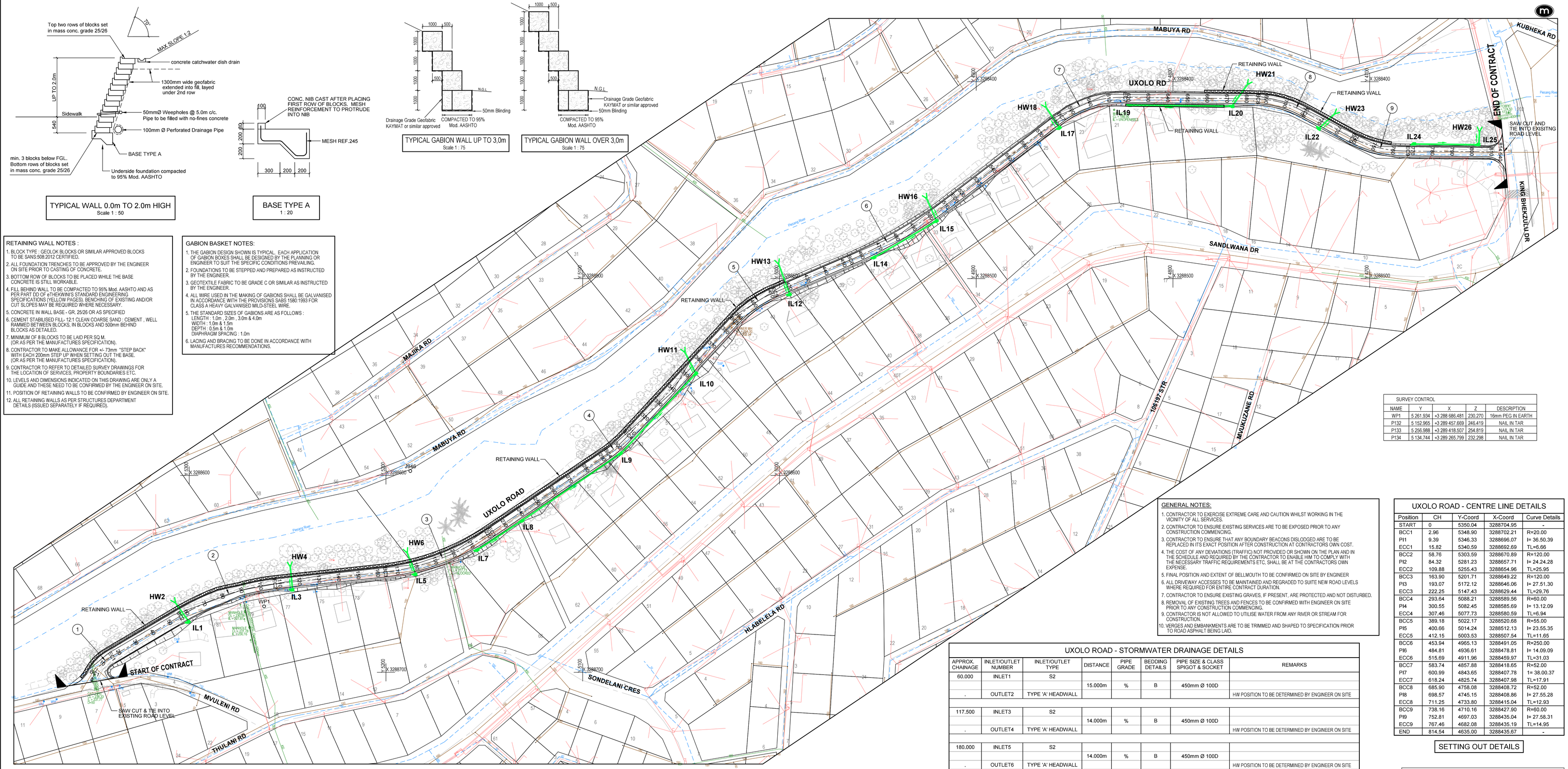

LAYOUT PLAN
Scale 1:500

SURVEY CONTROL

NAME	Y	X	Z	DESCRIPTION
WP1	5 261 934	+3 288 686.481	230.270	16mm PEG IN EARTH
P132	5 152 965	+3 289 457.669	245.419	NAIL IN TAR
P133	5 256 988	+3 289 418.507	254.819	NAIL IN TAR
P134	5 134 744	+3 289 265.799	232.298	NAIL IN TAR

GENERAL NOTES:

1. CONTRACTOR TO EXERCISE EXTREME CARE AND CAUTION WHILST WORKING IN THE VICINITY OF ALL SERVICES.
2. CONTRACTOR TO ENSURE EXISTING SERVICES ARE TO BE EXPOSED PRIOR TO ANY CONSTRUCTION COMMENCING.
3. CONTRACTOR TO ENSURE THAT ANY BOUNDARY BEACONS DISLODGED ARE TO BE REPLACED IN ITS EXACT POSITION AFTER CONSTRUCTION AT CONTRACTORS OWN COST.
4. THE COST OF ANY DEVIATIONS (TRAFFIC) NOT PROVIDED OR SHOWN ON THE PLAN AND IN THE SCHEDULE AND REQUIRED BY THE CONTRACTOR TO ENABLE HIM TO COMPLY WITH THE NECESSARY TRAFFIC REQUIREMENTS ETC, SHALL BE AT THE CONTRACTORS OWN EXPENSE.
5. FINAL POSITION AND EXTENT OF BELLMOUTH TO BE CONFIRMED ON SITE BY ENGINEER
6. ALL DRIVEWAY ACCESSES TO BE MAINTAINED AND REGRADED TO SUITE NEW ROAD LEVELS WHERE REQUIRED FOR ENTIRE CONTRACT DURATION.
7. CONTRACTOR TO ENSURE EXISTING GRAVES, IF PRESENT, ARE PROTECTED AND NOT DISTURBED.
8. REMOVAL OF EXISTING TREES AND FENCES TO BE CONFIRMED WITH ENGINEER ON SITE PRIOR TO ANY CONSTRUCTION COMMENCING.
9. CONTRACTOR IS NOT ALLOWED TO UTILISE WATER FROM ANY RIVER OR STREAM FOR CONSTRUCTION.
10. VERGES AND EMBANKMENTS ARE TO BE TRIMMED AND SHAPED TO SPECIFICATION PRIOR TO ROAD ASPHALT BEING LAID.

UXOLO ROAD - CENTRE LINE DETAILS

Position	CH	Y-Coord	X-Coord	Curve Details
START	0	5350.04	3288704.95	-
BCC1	2.96	5348.90	3288702.21	R=20.00
PI1	9.39	5346.33	3288696.07	I= 36.50.39
ECC1	15.82	5340.59	3288692.69	TL=6.66
BCC2	58.76	5303.59	3288670.89	R=120.00
PI2	84.32	5281.23	3288657.71	I= 24.24.28
ECC2	109.88	5255.43	3288654.96	TL=25.95
BCC3	163.90	5201.71	3288649.22	R=120.00
PI3	193.07	5172.12	3288646.06	I= 27.51.30
ECC3	222.25	5147.43	3288629.44	TL=29.76
BCC4	293.64	5088.21	3288589.56	R=60.00
PI4	300.55	5082.45	3288585.69	I= 13.12.09
ECC4	307.46	5077.73	3288580.59	TL=6.94
BCC5	389.18	5022.17	3288520.68	R=55.00
PI5	400.66	5014.24	3288512.13	I= 23.55.35
ECC5	412.15	5003.53	3288507.54	TL=11.65
BCC6	453.94	4965.13	3288491.05	R=250.00
PI6	484.81	4936.61	3288478.81	I= 14.09.09
ECC6	515.69	4911.96	3288459.97	TL=31.03
BCC7	563.74	4857.88	3288418.65	R=52.00
PI7	600.99	4843.65	3288407.78	I= 38.00.37
ECC7	618.24	4825.74	3288407.98	TL=17.91
BCC8	685.90	4758.08	3288408.72	R=52.00
PI8	698.57	4745.15	3288408.86	I= 27.55.28
ECC8	711.25	4733.80	3288415.04	TL=12.93
BCC9	738.16	4710.16	3288427.90	R=60.00
PI9	752.81	4697.03	3288435.04	I= 27.58.31
ECC9	767.46	4682.08	3288435.19	TL=14.95
END	814.54	4635.00	3288435.67	-

SETTING OUT DETAILS

UXOLO ROAD - STORMWATER DRAINAGE DETAILS

APPROX. CHAINAGE	INLET/OUTLET NUMBER	INLET/OUTLET TYPE	DISTANCE	PIPE GRADE	BEDDING DETAILS	PIPE SIZE & CLASS SPIGOT & SOCKET	REMARKS
60.000	INLET1	S2					
			15.000m	%	B	450mm Ø 100D	
.	OUTLET2	TYPE 'A' HEADWALL					HW POSITION TO BE DETERMINED BY ENGINEER ON SITE
117.500	INLET3	S2					
			14.000m	%	B	450mm Ø 100D	
.	OUTLET4	TYPE 'A' HEADWALL					HW POSITION TO BE DETERMINED BY ENGINEER ON SITE
180.000	INLET5	S2					
			14.000m	%	B	450mm Ø 100D	
.	OUTLET6	TYPE 'A' HEADWALL					HW POSITION TO BE DETERMINED BY ENGINEER ON SITE
213.000	INLET7	S2					
			27.000m	%	C	450mm Ø 100D	
240.000	INLET8	S2					
			60.000m	%	C	450mm Ø 100D	
300.000	INLET9	S2					
			55.000m	%	C	450mm Ø 100D	
355.000	INLET10	S2					
			12.000m	%	B	450mm Ø 100D	
.	OUTLET11	TYPE 'A' HEADWALL					HW POSITION TO BE DETERMINED BY ENGINEER ON SITE
420.000	INLET12	S2					
			17.000m	%	B	450mm Ø 100D	
.	OUTLET13	TYPE 'A' HEADWALL					HW POSITION TO BE DETERMINED BY ENGINEER ON SITE
466.000	INLET14	S2					
			43.000m	%	C	450mm Ø 100D	
503.000	INLET15	S2					
			13.000m	%	B	450mm Ø 100D	
.	OUTLET16	TYPE 'A' HEADWALL					HW POSITION TO BE DETERMINED BY ENGINEER ON SITE
581.000	INLET17	S2					
			15.000m	%	B	450mm Ø 100D	
.	OUTLET18	TYPE 'A' HEADWALL					HW POSITION TO BE DETERMINED BY ENGINEER ON SITE
622.000	INLET19	S2					
			53.000m	%	C	450mm Ø 100D	
675.000	INLET20	S2					
			15.000m	%	B	450mm Ø 100D	
.	OUTLET21	TYPE 'A' HEADWALL					HW POSITION TO BE DETERMINED BY ENGINEER ON SITE
723.000	INLET22	S2					
			12.000m	%	B	450mm Ø 100D	
.	OUTLET23	TYPE 'A' HEADWALL					HW POSITION TO BE DETERMINED BY ENGINEER ON SITE
772.000	INLET24	S2					
			33.000m	%	C	450mm Ø 100D	
805.000	INLET25	S2					
			8.000m	%	C	450mm Ø 100D	
.	OUTLET26	TYPE 'A' HEADWALL					HW POSITION TO BE DETERMINED BY ENGINEER ON SITE

STORMWATER NOTES:

1. FOR DETAILS ON INLETS, MANHOLES AND HEADWALLS REFER TO STD DRAWING No's. 38571, 38572, 38573 AND 38576.
2. FINAL INLET, MANHOLE AND HEADWALL POSITION AND LEVELS TO BE DETERMINED ON SITE BY ENGINEER.
3. EXTENT OF RENO MATTRESS PROTECTION TO BE CONFIRMED ON SITE BY ENGINEER.

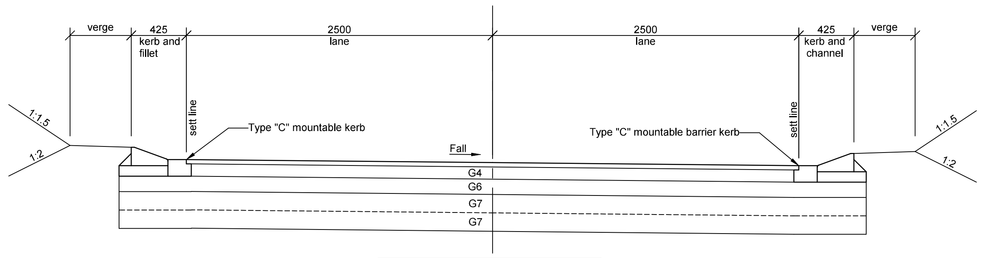

TYPICAL CROSS SECTION
(CH80.000 TO CH815.000)
Scale 1 : 25

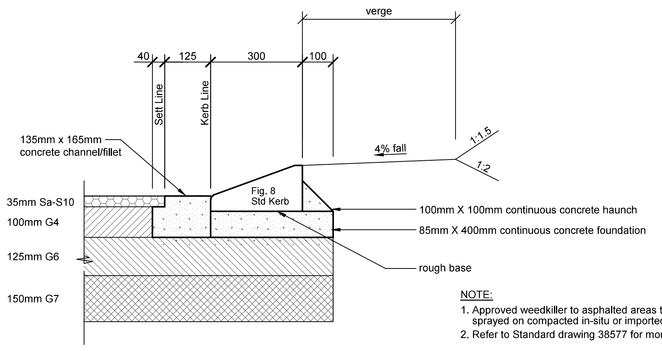

NOTE:
1. Approved weedkiller to asphalted areas to be sprayed on compacted in-situ or imported layer.
2. Refer to Standard drawing 38577 for more details.

TYPE "C" FIG. 8 MOUNTABLE KERB AND CAST INSITU FILLET/CHANNEL WITH SIDEWALK
Scale 1 : 10

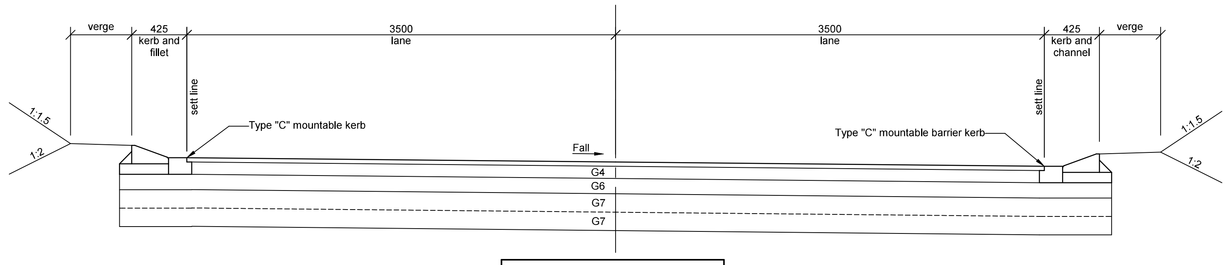

TYPICAL CROSS SECTION
(CH0.000 TO CH80.000)
Scale 1 : 25

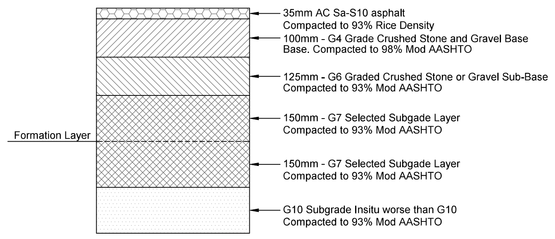

PAVEMENT DESIGN LAYERS
Scale 1 : 10

DRAUGHTING SYMBOLS

DETAIL	Proposed	Existing
CENTERLINE		
WATERMAIN DUCT		
TELKOM CABLE DUCT		
ELECTRIC CABLE DUCT		
ELECTRIC CABLES		
ELECTRIC LIGHT POLE		
TRAFFIC SIGNAL	TS	TS
CONSUMER DISTRIB. UNIT	CDU	CDU
TELKOM CABLES		
TELEPHONE POLE	TP	TP
SEWER		
STORMWATER DRAIN	SWD	SWD
STORMWATER INLET		
SCOOP		
KERB AND CHANNEL		
EARTH EMBANKMENT		
WATERMAIN		
VALVE (Valve / Air Valve)	V / AV	V / AV
FIRE PLUG	FP	FP
STANDARD HYDRANT	SH	SH
EXISTING M.H. TO BE CONVERTED TO CATCHPIT		
EXISTING CATCHPIT TO BE CONVERTED TO M.H.		

FOR TENDER PURPOSES ONLY

New Road Area ..... m²

Unsurfaced to Surfaced ..... km's

AS BUILT

Date ..... Sign .....

eTHEKWINI MUNICIPALITY

ENGINEERING UNIT
ROADS PROVISION DEPARTMENT

PLAN DESCRIPTION	DWG. NO.	
CONTINUED FROM		
CONTINUED ON		
CROSS SECTIONS		
TYPICAL CROSS SECTION		
SURVEY LAYOUT		

REDUCED PLAN USE SCALE BELOW
0 10 20 30 40 50 60 70
70mm ON ORIGINAL PLAN

DRAWN IN ALLYWINDOWS

Revision	Date	Description

NOTE:
No construction work to commence until land and servitude acquisitions have been completed

Acquisitions completed

Date Engineer

NORTH POINT

UNDERGROUND SERVICES CHECKED

SERVICE	DATE	SIGNATURE
S.W.DRAINS		
SEWERS		
WATER MAINS		
G.P.O.CABLES		
ELECTRIC CABLES		
S.A.R. CABLES		
E.S.C. CABLES		
OIL PIPE LINE		

NOTE:
Only underground services affected by new construction work are shown. Care must be taken during excavations for road foundations, trenches etc... to avoid damage to undergound services such as sewers, drains, cables, water mains and connections. Wherever possible these must be located before work proceeds.

Contract No: 1R-33160

Project Title: GRAVEL TO SURFACE UPGRADE OF UXOLO ROAD INANDA WARD 42

Drawing Title: DIMENSIONS, SETTING OUT, EXISTING AND PROPOSED SERVICES PLAN

Scales	Reference
AS SHOWN	
Designed: N.MAPHUMULO	Date: 07 OCTOBER 2025
Checked: N.PARSHOTAM	Drawn in AllyWindows by: D.NAIDOO

Manager RD (N)

DIH : RP

Head : Engineering

Drawing No: 49484 | Sheet 01 of 01 Sheets