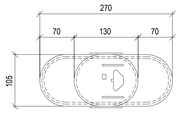

PLAN - PLASTIC METER BOX
SCALE 1:5

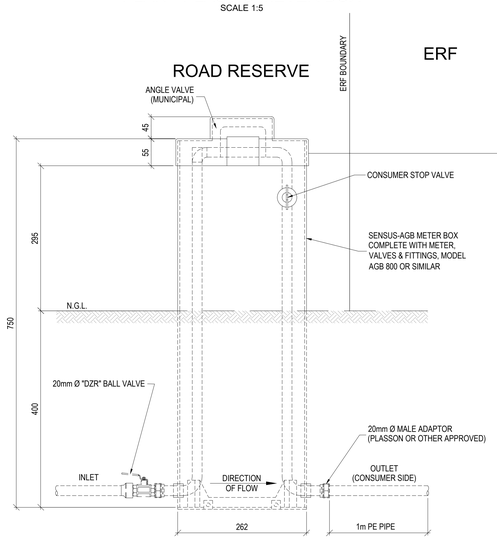

ELEVATION - PLASTIC METER BOX
SCALE 1:5

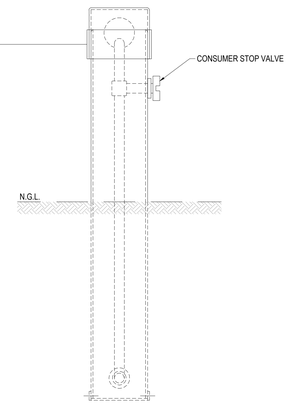

SECTION - PLASTIC METER BOX
SCALE 1:5

FOR USE WITH 20mm Ø PIPES FOR ALL NEW DOMESTIC CONNECTIONS

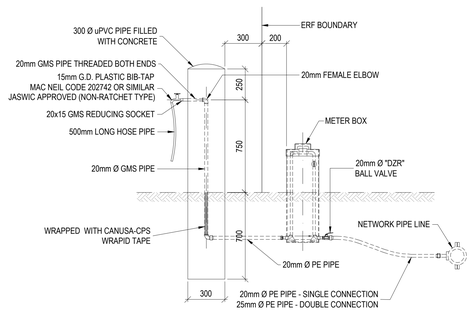

STAND PIPE WITH WATER METER FOR INDIVIDUAL LOW COST HOUSING STANDS
SCALE 1:25

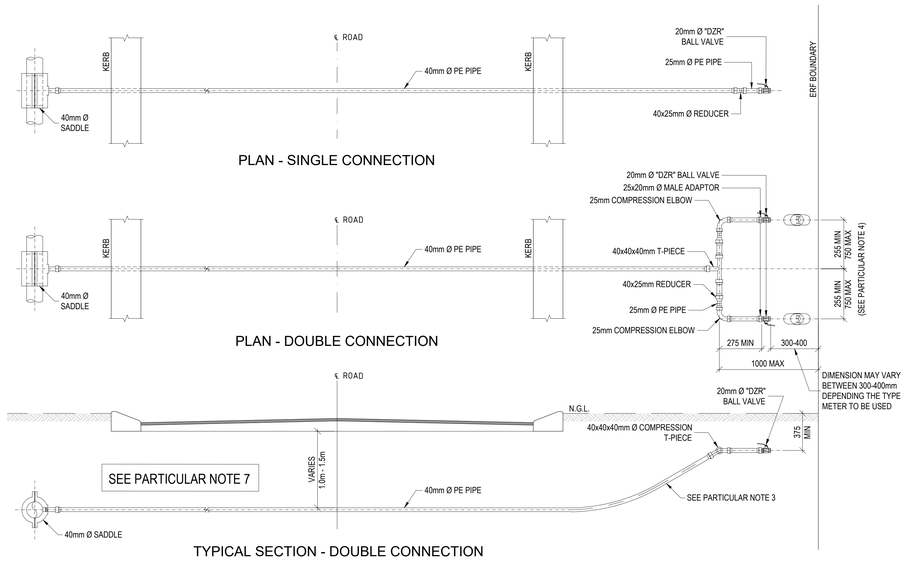

LONG ERF CONNECTIONS
SCALE 1:25

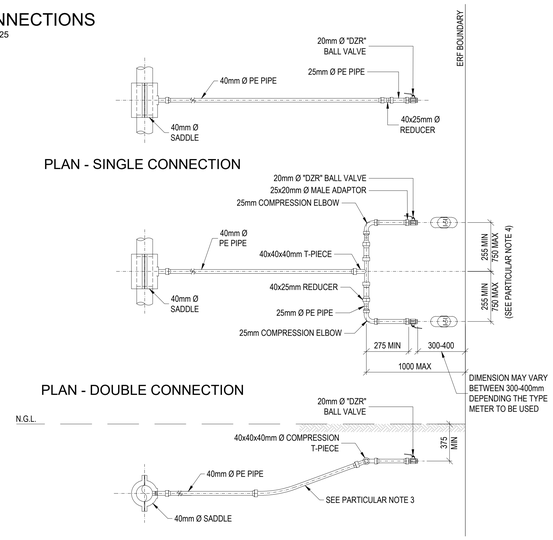

SHORT ERF CONNECTIONS
SCALE 1:25

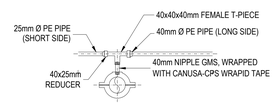

LONG SHORT COMBINATION DETAIL
SCALE 1:25

NOTES AND SPECIFICATIONS

GENERAL

1. ALL MATERIAL AND WORKMANSHIP MUST COMPLY WITH THE REQUIREMENTS OF THE LATEST RELEVANT SANS STANDARD
2. ALL DIMENSIONS ARE IN mm (UNLESS OTHERWISE SPECIFIED)
3. DO NOT SCALE FROM THESE DRAWINGS
4. ALL DIMENSIONS TO BE CHECKED AND APPROVED ON SITE
5. ALL CONSTRUCTION TO BE DONE IN ACCORDANCE WITH THE STANDARD SPECIFICATIONS FOR MUNICIPAL CIVIL ENGINEERING WORKS, THIRD EDITION 2005 AND THE STANDARD COT DETAIL DRAWINGS
6. THIS DRAWING MUST BE READ IN CONJUNCTION WITH THE STANDARD DRAWINGS (IF APPLICABLE)
7. THIS DRAWING MUST BE READ IN CONJUNCTION WITH THE STANDARD SPECIFICATIONS FOR MUNICIPAL CIVIL ENGINEERING WORKS, SERIES 4
8. THE SIGNATURE OR INITIALS ON THIS DRAWING OF ANY DIRECTOR OF THE WATER AND SANITATION DEPARTMENT, IN NO WAY, REMOVES ANY RESPONSIBILITY WHATSOEVER FROM THE CONSULTANT
9. THE CONSULTANT REMAINS RESPONSIBLE TO ENSURE THAT ALL THE GUIDELINES, STANDARD DRAWINGS, STANDARDS AND SPECIFICATIONS OF THE WATER AND SANITATION DEPARTMENT HAVE BEEN MET AND ARE COMPLIED WITH
10. FINAL POSITION OF SERVICES TO BE DETERMINED ON SITE

PARTICULAR

1. ALL PIPES & FITTINGS SHALL COMPLY WITH THE "SCHEDULE OF APPROVAL PIPES & FITTINGS" AS COMPILED BY THE DEPARTMENT OF WATER AND SANITATION FROM TIME TO TIME

NO SO CALLED LOW DENSITY AGRICULTURAL PIPES ARE ACCEPTABLE

2. 1m COVER ON PIPES CROSSING ROADS
3. TRANSITION OF PIPE DEPTH FROM 1m TO 0.375m TO BE OVER A LENGTH OF 3m (1:5 GRADIENT) TO PRECLUDE ANY KINKS IN PIPE. IF SIDEWALK IS TOO NARROW, APPROPRIATE BENDS SHALL BE USED
4. DISTANCE BETWEEN METER BOXES MAY BE INCREASED ON SITE DEPENDING ON WHETHER AN ELECTRIC METER BOX OR TELKOM KIOSK IS TO BE INSTALLED BETWEEN CONNECTIONS
5. 90N MASS HOUSING PROJECTS, OR IF APPROVED BY THE ENGINEER, 40mm Ø & 25mm Ø PIPES MAY BE REPLACED BY 25mm Ø & 20mm Ø PIPES RESPECTIVELY, USING APPROPRIATE FITTINGS
6. VALVES MUST BE ISO OR SABS APPROVED, OR JASWIC ACCEPTED & LISTED
7. ROAD CROSSING DRILLED WHERE POSSIBLE, OTHERWISE ENGINEER MUST APPROVE OPEN TRENCH CROSSING. SEE DRAWING 7515-W211 FOR TRENCHING AND BACKFILL DETAILS.

THIS DRAWING IS THE PROPERTY OF FLUX/SDM CONSULTING ENGINEERS (Pty) Ltd. AND MAY NOT BE COPIED OR REPRODUCED EITHER WHOLLY OR IN PART WITHOUT THE WRITTEN PERMISSION OF THE AFOREMENTIONED COMPANY

THIS DRAWING IS NOT TO BE SCALED. FIGURED DIMENSIONS ONLY ARE TO BE FOLLOWED. ADDITIONAL DIMENSIONS, WHEN REQUIRED, WILL BE PROVIDED UPON REQUEST. CONTRACTORS ARE TO CHECK ALL DIMENSIONS BEFORE WORK COMMENCES AND REFER ANY DISCREPANCY TO THE ENGINEER FOR ADJUSTMENTS.

DRAWING No.	REFERENCE DRAWINGS :

NO.	DATE	REVISION	DRAWN
0	NOV 2025	ISSUED FOR TENDER	B.S.

FOR TENDER

CLIENT

UMKHANYAKUDE DISTRICT MUNICIPALITY
KINGFISHER ROAD
MKUZE
3965
TEL: (035) 573 8600
FAX: (035) 573 1094

CONSULTING ENGINEERS

2 NCONDO PLACE
RIDGESIDE DRIVE
UMHLANGA RIDGE
DURBAN
4320
TEL: 031 101 3217

PROJECT

KWAJOBE COMMUNITY WATER SUPPLY SCHEME: PHASE 1

DRAWING TITLE

PLASTIC METER BOX AND WATER COMMUNICATION PIPES

	SIGNATURE FOR FLUX/SDM	DATE	PR.No.	SHEET SIZE
DESIGNED	B.S	SEP 2025		A1
DRAWN	B.S	SEP 2025		SCALE
CHECKED	N.N	SEP 2025		AS SHOWN
APPROVED	N.N	SEP 2025		DWG STATUS P
CO-ORDINATOR				P = PRELIMINARY C = CONSTRUCTION

FLUX/S.D.M. DRAWING NUMBER

UKDM/STD/412

REVISION No 0

FLUX/SDM-DRAWING No.

COPYRIGHT RESERVED

C:\Users\User\OneDrive - Flux Development Scientists\Documents\01. Flux\02. Umkhanyakude DM\01. Kwajobe CWSS\03. Drawings\02. Tender Drawings\DWG\Meter Box and Water Communication Pipe.dwg