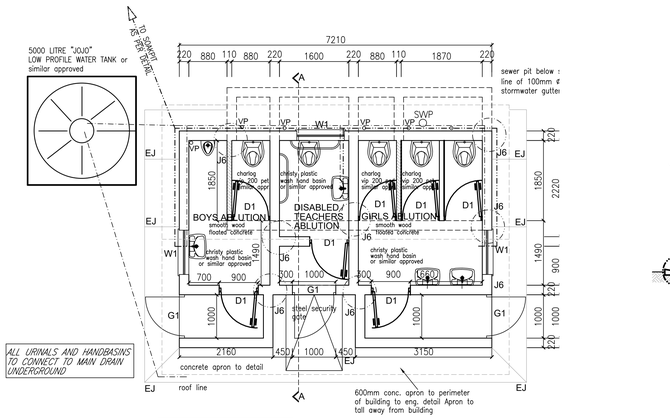

SCALE: 1:50 | DETAIL DESCRIPTION. FLOOR PLAN

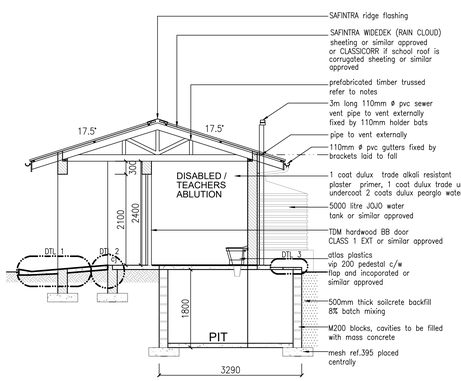

SCALE: 1:50 | DETAIL DESCRIPTION. SECTION A-A

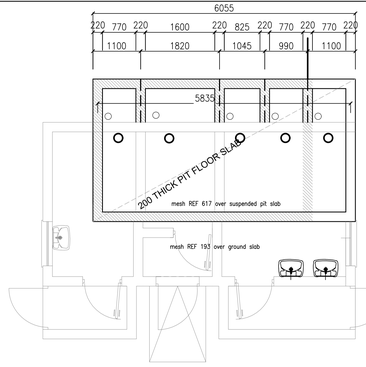

SCALE: 1:50 | DETAIL DESCRIPTION. PIT PLAN

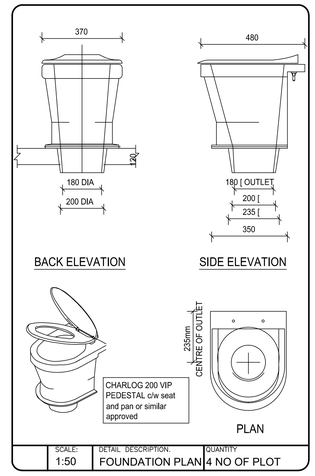

SCALE: 1:50 | DETAIL DESCRIPTION. FOUNDATION PLAN | QUANTITY 4 NO OF PLOT

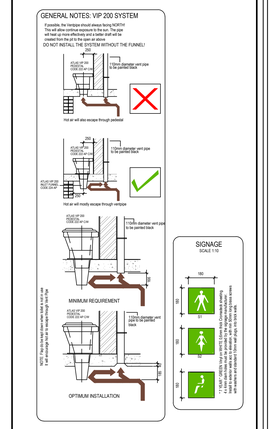

SCALE: 1:75 | DETAIL DESCRIPTION. VIP 200 SYSTEM & SIGNAGE

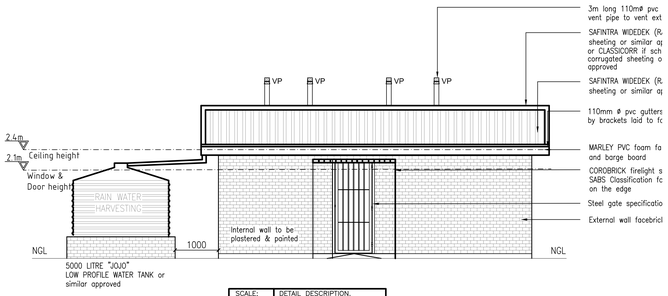

SCALE: 1:50 | DETAIL DESCRIPTION. FRONT ELEVATION

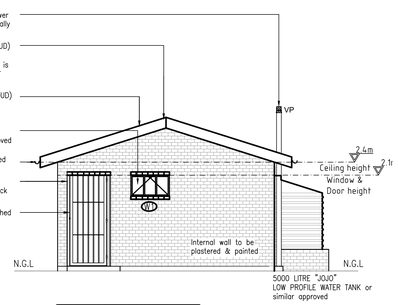

SCALE: 1:50 | DETAIL DESCRIPTION. SIDE ELEVATION

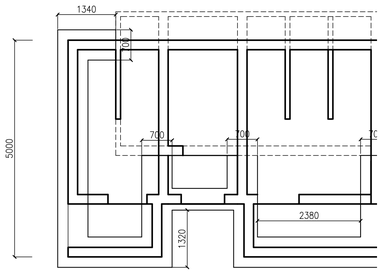

SCALE: 1:50 | DETAIL DESCRIPTION. FOUNDATION PLAN

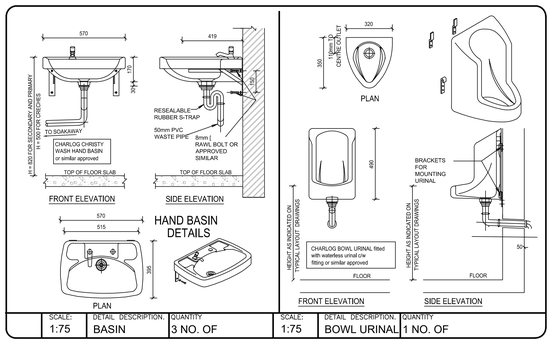

SCALE: 1:75 | DETAIL DESCRIPTION. BASIN | QUANTITY 3 NO. OF | SCALE: 1:75 | DETAIL DESCRIPTION. BOWL URINAL | QUANTITY 1 NO. OF

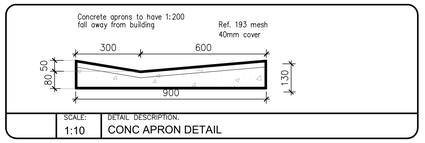

SCALE: 1:10 | DETAIL DESCRIPTION. CONC APRON DETAIL

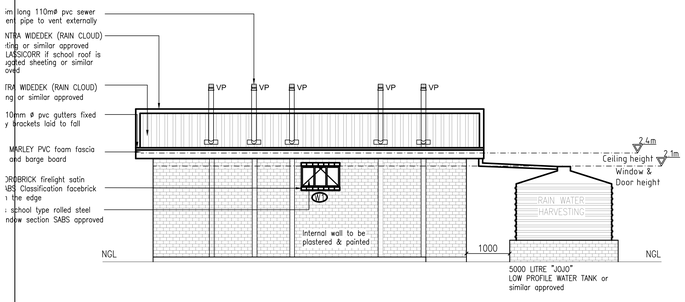

SCALE: 1:50 | DETAIL DESCRIPTION. BACK ELEVATION

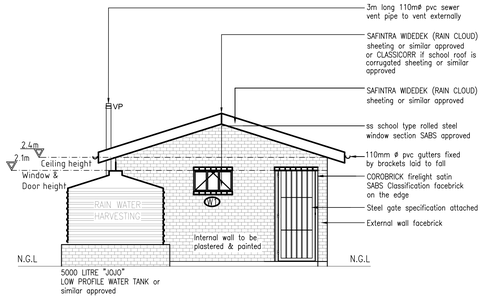

SCALE: 1:50 | DETAIL DESCRIPTION. SIDE ELEVATION

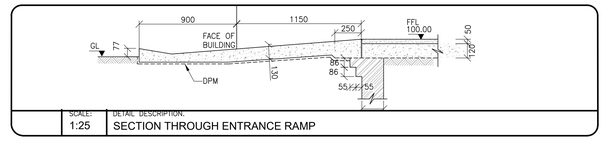

SCALE: 1:25 | DETAIL DESCRIPTION. SECTION THROUGH ENTRANCE RAMP

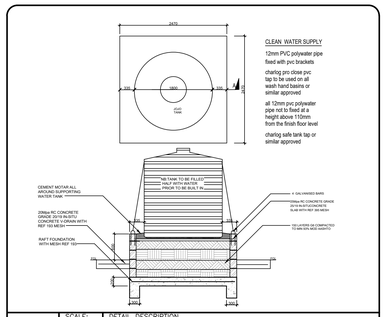

SCALE: 1:50 | DETAIL DESCRIPTION. WATER TANK STAND DETAIL

SCALE: 1:50 | DETAIL DESCRIPTION. TRUSS ELEVATION

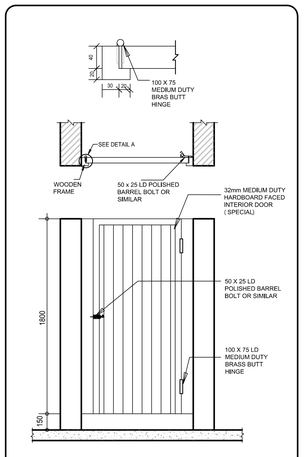

SCALE: 1:20 | DETAIL DESCRIPTION. STABLE DOOR | QUANTITY 3 NO. OF

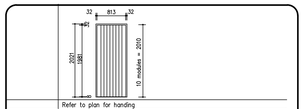

	Refer to plan for handing
TYPE:	D1
FRAME:	1.2mm galvanised pressed metal 1 No. frame suitable for 230mm wall
F.FINISH:	Galvanised. Not painted.
DOOR:	2032x813x40mm TDM hardwood BB doors, SA Pine sub frame with double top and bottom rails, lounge and groove boarding in v joint rail, 20 x 150mm middle ledge, 20 x 225mm bottom ledge and 20 x 110mm braces.
D.FINISH:	Wood prime, one coat undercoat and two coats gloss
FURNITURE	DOOR SET 2

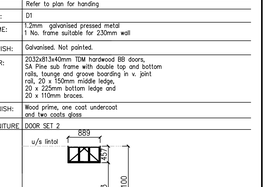

TYPE:	W1
FRAME:	Bottom hung SS school sandblasted glass putified window sections. SABS approved
GLASS:	4mm sandblasted glass putified in with steel window putty.
FITTING:	Approved standard brass fittings completed with window.
B. BARS	8mmø bars
FINISH:	Galvanised. No Painting required
NOTES:	Courses adjacent to window jambs are to have cores filled allowing fixing lugs to be built–in

SCALE: 1:60 | DETAIL DESCRIPTION. DOOR SET & WINDOW

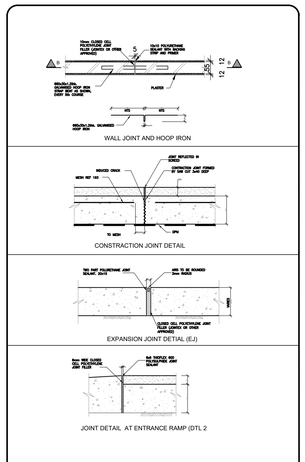

SCALE: 1:10 | DETAIL DESCRIPTION. JOINT DETAILS

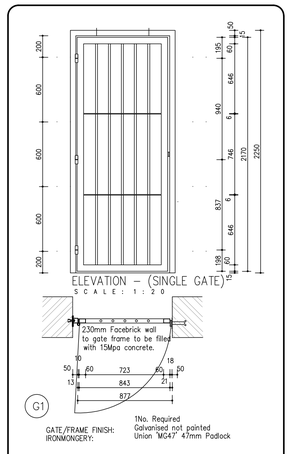

SCALE: AS SHOWN | DETAIL DESCRIPTION. GATE DETAILS

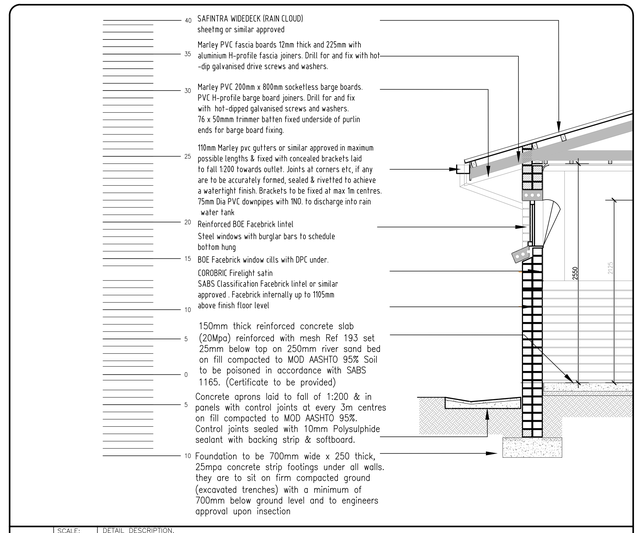

SCALE: 1:20 | DETAIL DESCRIPTION. TYPICAL EAVES DETAIL.

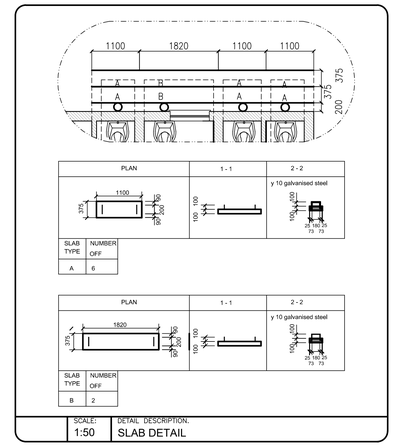

SCALE: 1:50 | DETAIL DESCRIPTION. SLAB DETAIL

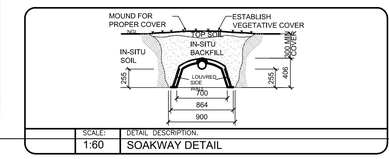

SCALE: 1:60 | DETAIL DESCRIPTION. SOAKWAY DETAIL

GENERAL NOTES:

1. The implementing agent will give direction whether a pit will be sealed or un-sealed depending on the outcome of the ground water profiles.
2. The contractor will be responsible for excavation the pit, whatever the ground conditions, his/her cost.
3. All blocks to be m9 engineering blocks for the whole substructure.
4. Section a-a shows the arrangement for an un-sealed pit, for sealed pits the outside wall of the substructure must be solid with no open vertical joints.
5. The bottom of the pit will include a 200mm thick concrete base to ensure the pit is fully sealed.
6. Central cutting walls must be constructed with fully mortared joints for extra full depth.
7. The outer wall of the pit must have a minimum thickness of 200mm
8. The pit must be 1 course of bricks above the natural ground level.
9. The slabs will be designed and approved by theimplementing agent.
10. The rain water harvesting tank must be equipped with a float valve and connected to the main water supply within the school yard, where it is available.
11. Taps in all wash hand basin must be charlock pvc Pro.
12. Close taps to ensure reliable water conservation, which must be able to close at minimum 15kpa pressure.
13. Vent pipes to secured to the walls outside the ablution facilities
    - 3m 110mm Ø vent pipe (black - uv) fixed with 3 110mm holder bats
    - 110mm fly screen used at vent end Charlock VIP 200 toilet pedestals to be complete with seat lid. Grade R: Char Bambi li/drop (kiddie pan)
    - pipes from sinks & urinal outlets to soakaway pit (50mm pvc)
    - pipes from gutters to fill tank (75mm pvc)
    - pipe form tank to sinks (15mm polycop) fitting to be done internally

CONSTRUCTION NOTES

A. FOUNDATIONS

1. Foundation to be 700mm wide x 250 thick, 25 mpa concrete strip footing under all walls.
2. They are to sit on firm compacted ground (excavated trenches) with a minimum of 700mm below ground level and to engineers approval upon inspection.

B. BACKFILL

1. Fill & imported fill to be approved clean earth, well watered & rammed in layers not exceeding 150mm in depth and thoroughly consolidated to a density of 95% mod ashto.

C. FLOORS

1. All to Engineers detail and specification.

D. WALLS

1. All walls are to comply with "Part K" of the National Building Regulations.
2. COROBRICK COMMONS to be used where to recieve plaster. COROBRICK ENGINEERING Bricks to be used below ground level in foundation walls.
3. Brickforce to every 3rd course up to window head height thereafter all courses from window head to underside of wallplate. Galvanised crimp wire wall ties (7 per square metre - laid staggered).
4. External face of inner skin to be painted bitumen paint. 375 micron embossed damp-proof membrane stepped below all window cills.
5. Where plaster is required internally (13 - 16mm thick) ratio must be 1:5 cement:sand mix. Beam filling to underside of roofing sheets.
6. Control joints to be provided in accordance with engineers specifications & must be sealed with 12mm deep polysulphide sealant with backing strip and impregnated softboard.
7. All internal brickwork to have brickforce at every third course of brickwork.
8. All founding and / or retaining wall to Structural Engineers details.
9. P.C. lintols to be installed over all new openings wheres walls to be plastered and painted.
10. **All Facebrick on edge lintols stricttly to eng. detail**

D. ROOF

1. Safintra 0.5mm thick AZ150ZincAl Widedek profile roof sheeting, fixed to intermediate steel purlins at 1600mm centres and to ridge and eaves purlins at 1350mm centres, 12x55mm long class3 metal self drilling screws at every second crest at intermediate purlins and every crest at eaves purlins all in accordance with the manufacturer's recommendations.
2. The sheeting shall be Widedek trapezoidal type profile as manufactured by Safintra Roofing.
3. The profile shall be roll-formed with 5 trapezoidal ribs at 191mm centres with a nett cover of 760mm.
4. The rib height shall be 29mm and shall be fixed in accordance with the manufacturer's recommendations.
5. Widedek sheeting the recommended minimum pitch for slopes in excess of 15m is 10° and for slopes less than 15m is 7.5°
6. Widedek sheeting can be ordered in any length, subject to transport limitations up to 13.2m . Longer lengths require special transport arrangements.
7. Purlin spacings are dependant on both downward loading and negative suction loading caused by wind. The engineer should be consulted to calculate the load (kN/m²) for particular application

CONCRETE MIX RATIO'S

STRENTH	UNIT.CEM	UNIT SAND	UNIT STONE
10MPa	2	3.5	3.5
15MPa	2	3	3
25MPa	2	2.5	2.5
30MPa	2	2	2

No.	BY	DATE	REVISION

COPYRIGHT IS VESTED IN VHB ASSOCIATES IN TERMS OF THE COPYRIGHT ACT. (ACT 98 OF 1978)

CLIENT

CLIENT'S SIGNATURE

VHB ASSOCIATES
ARCHITECTURE & PROJECT MANAGEMENT
HEAD OFFICE: KWA-ZULU NATAL
SUITE 1, BISSET HOUSE
48 BISSET STREET
PORT SHEPSTONE, 4240
TEL : 039 682 5003
MOBILE : 082 554 3427
BRANCH: EASTERN CAPE
OFFICE No. 2, FYNN HOUSE
STREET No. 6
BIZANA, 4800
TEL: 039 251 0476
FAX: 086 577 7713
P. O. BOX 455, PORT SHEPSTONE, 4240
e-mail: vhb@vhbassociates.co.za

PROJECT:
ERADICATION OF PIT LATRINE
FOR: NDABANKULU PRIMARY SCHOOL
EMIS No. 500224146
CADASTRAL DESCRIPTION:
KWAMABASO TRIBAL AUTHORITY, NYANDU AREA
UMZINYATHI DISTRICT MUNICIPALITY

DRAWING:
STAFF ABLUTIONS

DESIGNED	V. BRIDGLALL	DATE	JULY 2026
DRAWN	J. DUKI	SCALE	AS SHOWN
CHECKED	V. BRIDGLALL		

JOB No.	SHEET No.	REV.
IDT 26/05	2M3F1D	A