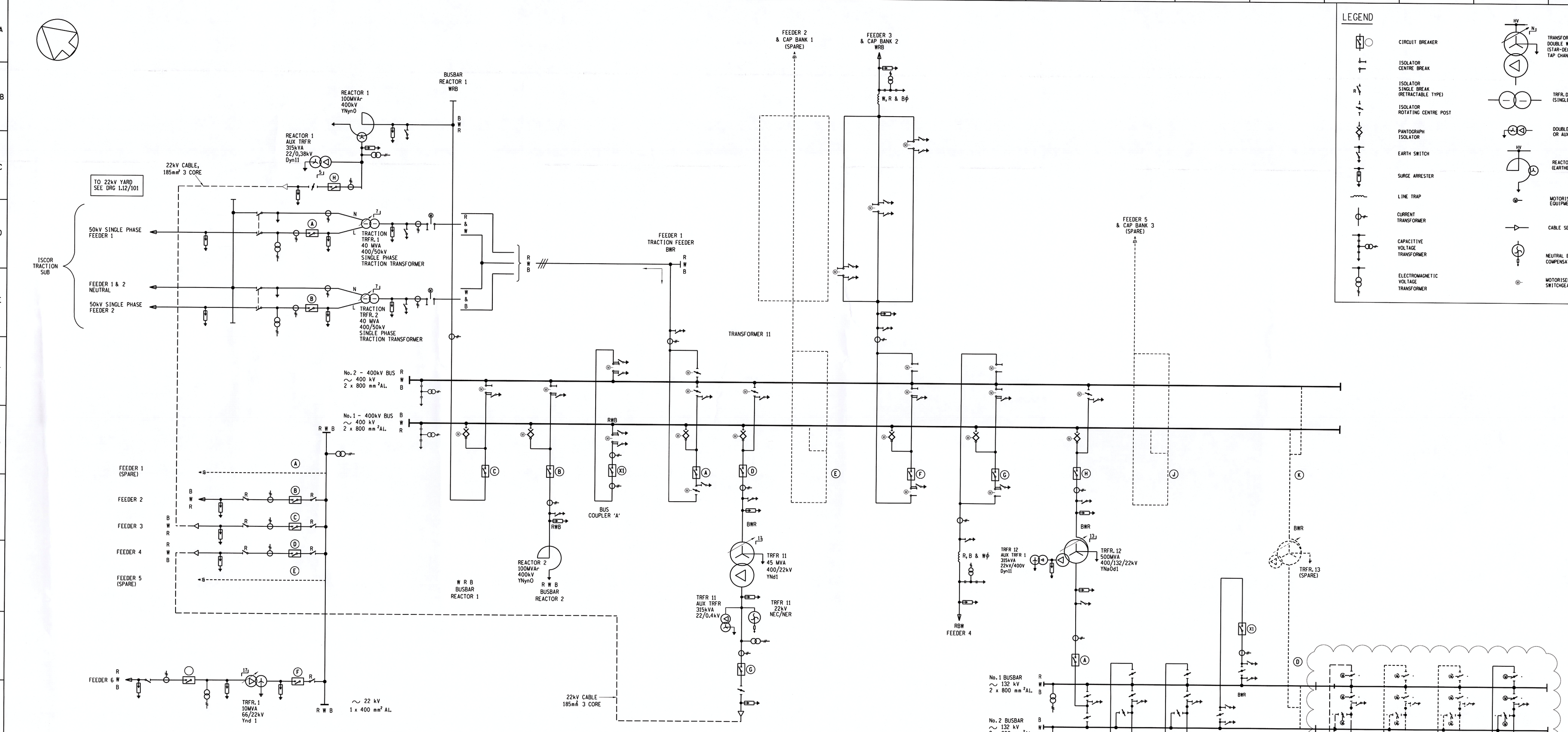


| 400/132 kV TRANSFORMERS | | | | | | | | |
|---|---|---|---|---|---|---|---|---|
| CB RATING | | | BAY | DESCRIPTION | STAGE 1 2014 | STAGE 2 | STAGE 3 | STAGE 4 |
| kV | A | kA | | | | | | |
| 400 | 4000 | 50 | TRANSFORMER 12 | 500MVA 400/132kV YNa0d1 | ✓ | | | |
| 132 | 3150 | 40 | | | | | | |
| | | | TRANSFORMER 13 | SPARE BAY | | | | |

| 400/50kV TRANSFORMERS (SINGLE PHASE) | | | | | | | | |
|---|---|---|---|---|---|---|---|---|
| CB RATING | | | BAY | DESCRIPTION | STAGE 1 1977 | STAGE 2 1990 | STAGE 3 | STAGE 4 |
| kV | A | kA | | | | | | |
| 400 | 3150 | 50 | TRANSFORMER 1 | 40MVA 400/50kV | ✓ | | | |
| 50(88) | 1250 | 16 | | | | | | |
| 400 | 3150 | 50 | TRANSFORMER 2 | 40MVA 400/50kV | ✓ | | | |
| 50(88) | 1250 | 16 | | | | | | |

| 400/22 kV TRANSFORMERS | | | | | | | | |
|---|---|---|---|---|---|---|---|---|
| CB RATING | | | BAY | DESCRIPTION | STAGE 1 2005 | STAGE 2 | STAGE 3 | STAGE 4 |
| kV | A | kA | | | | | | |
| 400 | 3150 | 50 | TRANSFORMER 11 | 400/22kV 45MVA | ✓ | | | |
| 22(66) | 2500 | 40 | | | | | | |

| 22/66 kV TRANSFORMERS | | | | | | | | |
|---|---|---|---|---|---|---|---|---|
| CB RATING | | | BAY | DESCRIPTION | STAGE 1 1977 | STAGE 2 1981 | STAGE 3 2008 | STAGE 4 |
| kV | A | kA | | | | | | |
| 66 | 2500 | 31,5 | TRANSFORMER 1/ FEEDER 6 LOERIESFONTEIN | 10MVA 66/22kV Ynd1 | | ✓ | CB CHANGED | |
| 22 | 800 | 13,1 | | | | | | |

| 400kV REACTORS | | | | | | | | |
|---|---|---|---|---|---|---|---|---|
| CB RATING | | | BAY | DESCRIPTION | STAGE 1 1977 | STAGE 2 | STAGE 3 | STAGE 4 |
| A | | kA | | | | | | |
| 400 | 3150 | 50 | B/B REACTOR 1 | 100MVAr | ✓ | | | |
| 22(66) | 2500 | 40 | | | | | | |
| 400 | 4000 | 50 | B/B REACTOR 2 | 100MVAr | ✓ | | | |

| 400kV | | | | | | | | |
|---|---|---|---|---|---|---|---|---|
| CB RATING | | | BAY | DESCRIPTION | STAGE 1 1977 | STAGE 2 1990 | STAGE 3 2002 | STAGE 4 2005 | STAGE 5 2018 |
| A | | kA | | | | | | | |
| 3150 | 50 | | FEEDER 1 | TRACTION FEEDER | | | | ✓ | |
| | | | FEEDER 2 | SPARE | | | | | |
| 2500 | 31,5 | | FEEDER 3 | ARIES 1 | ✓ | | FIBRE OPTIC | | |
| 2500 | 31,5 | | FEEDER 4 | JUNO 1 | ✓ | | FIBRE OPTIC | | |
| | | | FEEDER 5 | SPARE (DESIGNATED FOR ARIES) | | | | | |
| 2500 | 31,5 | | BUS COUPLER 'A' | | ✓ | | | | |
| | | | BUS COUPLER 'B' | (FUTURE) | | | | | |
| | | | CAPACAITOR BANK 1 | SPARE | | | | | ✓ |
| | | | CAPACAITOR BANK 2 | SPARE | ✓ | 2nd BANK ADDED | | | |

| 132kV | | | | | | | |
|---|---|---|---|---|---|---|---|
| CB RATING | | | BAY | DESCRIPTION | STAGE 1 2014 | STAGE 2 2020 | STAGE 3 | STAGE 4 |
| A | | kA | | | | | |
| 3150 | 40 | | FEEDER 1 | DOORNPAN 1 | ✓ | | | |
| 3150 | 40 | | FEEDER 2 | KHOBAB 1 | ✓ | | | |
| 3150 | 40 | | BUS COUPLER A | SPARE | ✓ | | | |
| - | - | | FEEDER 3 | SPARE | | | | |
| - | - | | FEEDER 4 | SPARE | | | | |
| - | - | | FEEDER 5 | SPARE | | | | |
| 3150 | 40 | | FEEDER 6 | NAROSIES 1 | | ✓ | | |

0

| 22kV | | | | | | | |
|---|---|---|---|---|---|---|---|
| CB RATING | | | BAY | DESCRIPTION | STAGE 1 | STAGE 2 1981 | STAGE 3 2005 | STAGE 4 |
| A | | kA | | | | | | |
| | | | FEEDER 1 | (SPARE) | | | | |
| 800 | 13,1 | | FEEDER 2 | FARMERS 1 | | ✓ | | |
| 800 | 13,1 | | FEEDER 3 | REACTOR 1 TERTIARY | | ✓ | | |
| 800 | 13,1 | | FEEDER 4 | TRFR 11 22kV | | | ✓ | |
| | | | FEEDER 5 | (SPARE) | | | | |

| 50kV SINGLE PHASE | | | | | | | | |
|---|---|---|---|---|---|---|---|---|
| CB RATING | | | BAY | DESCRIPTION | STAGE 1 1977 | STAGE 2 | STAGE 3 | STAGE 4 |
| A | | kA | | | | | | |
| | | | FEEDER 1 | ISCOR TRACTION SUB. | ✓ | | | |
| | | | FEEDER 2 | ISCOR TRACTION SUB. | ✓ | | | |

NOTES:

1.

| CT BUS ZONE TURNS RATIO | |
|---|---|
| 400 kV | 1/1600 |
| 132 kV | 1/1600 |

2. STATION BATTERY VOLTAGE 220 V DC
3. ISOLATOR BLADES OPENING SHOWN GEOGRAPHICALLY CORRECT.

**FINAL DESIGN FOR CONSTRUCTION**
**ORIGINAL DWG #: 0.12/5573 - 0 REV 22**
**CONCEPT DESIGN DWG #: N/A**
**DETAIL DESIGN DWG #: HEL15P05-SE-D6 - 0 REV 1**

| REV | REVISION DESCRIPTION | DRAWN | CHKD | CHKD (SEC) | AUTH (SUBS) | DATE |
|---|---|---|---|---|---|---|
| 0 | 132kV BUSBAR EXTENDED,FEEDER 6 EQUIPPED AS NAROSIES 1 | – | – | – | – | – |

SE-E4 KEY PLAN
HEL15P05- REFERENCE DRAWINGS

SUBSTATION DESIGN DESIGN CHECKED — DATE 19/11/2019
SUBSTATION DESIGN DESIGN APPROVED — M PEPPER — DATE 19/11/2019
SECONDARY PLANT DESIGN CHECKED — DATE 19/11/2019
DRAWN BY — DATE 19/11/2019

Eskom
ESKOM HOLDINGS LIMITED
REG No. 2002/015527/30

# HELIOS
STATION ELECTRIC DIAGRAM

SCALE: ~
HEL15P05-SE-E3
SHEET NUMBER 0 REVISION 0
SIZE GROOTTE A0L