DRAWING COPYRIGHT STATEMENT

Copyright subsists in this drawing and vests in Eskom Rotek Industries SOC Ltd. The drawing and it's notations,unless otherwise indicated,also constitute confidential information which is the property of Eskom Rotek Industries SOC Ltd. Eskom Rotek Industries SOC Ltd relies,for the protection of it's interests,on the statutory and common law rights as aforesaid and any unauthorised copying or use of this drawing or it's contents would result in infringement of such rights.

IF IN DOUBT ASK

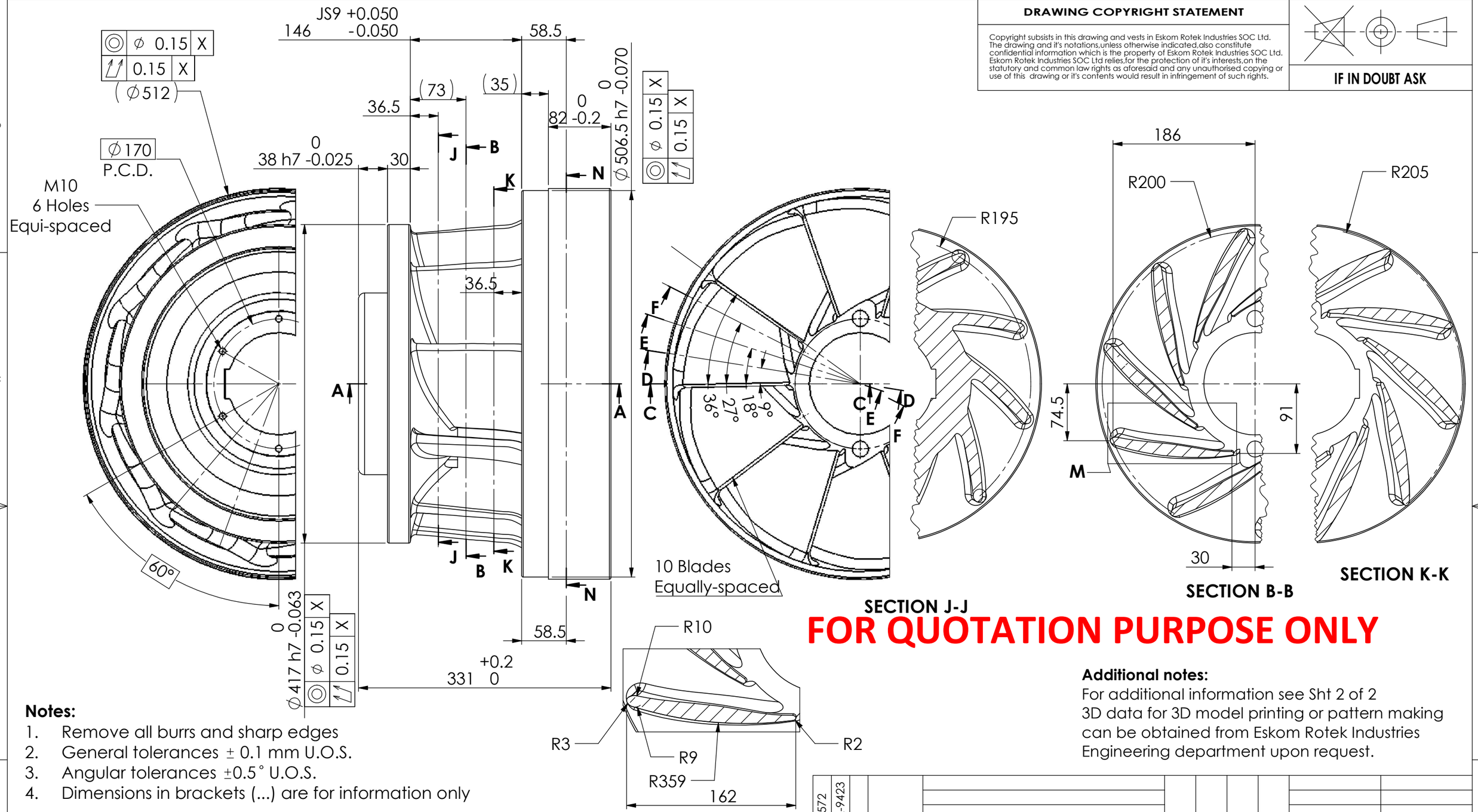

FOR QUOTATION PURPOSE ONLY

Notes:

1. Remove all burrs and sharp edges
2. General tolerances ± 0.1 mm U.O.S.
3. Angular tolerances ±0.5° U.O.S.
4. Dimensions in brackets (...) are for information only
5. Machining 1.6 followed by polishing 0.4

Finish: Clean, ultrasonic and dye penetrant tested, test certificates to be provided,

Additional finish: After polishing, CA6NM runner to be either Electroless Nickel Plated 12 to 15 Microns or titanium carbide coated, 10 to 15 microns,certificates to be provided.

Material: ASTM A487/A473 CA6NM - Normalized and tempered, material, heat treatment, test certificates and 2 test coupons to be provided.

Additional notes:
For additional information see Sht 2 of 2
3D data for 3D model printing or pattern making can be obtained from Eskom Rotek Industries Engineering department upon request.

PRJ No.	JOB No.	REV	DATE	REVISION DESCRIBTION	REV BY	CHKD BY	AUTH BY	APPR BY	REFERENCE DRAWINGS
TEE-L-572	TOD-L-9423								

REVISION 0 - ONLY			
	DESIGN APPR		
	DO AUTH	2020/07/30	
	CHKD BY	2020/07/29	B Matodzi
	DRAWN BY	2019/12/23	T Ramphele

1. DRAWING FILE PATH- Y:\Engineering Development\Drawing Office\TOD-L-9423 Ncora Hydro PS\03_Cad_Data\Models_Drawings\
2. MODEL FILE PATH- Y:\Engineering Development\Drawing Office\TOD-L-9423 Ncora Hydro PS\03_Cad_Data\Models_Drawings\

Eskom Rotek Industries

SCALE: DO NOT SCALE

TITLE: **NCORA HYDRO POWER STATION UNIT 1 HORIZONTAL HYDRO TURBINE RUNNER PART**

APPROVED BY	DATE	DRAWING No.	SHEET	REV
	31.07.2020	13.25_8350	1 OF 3	0

SIZE A3L

DRAWING COPYRIGHT STATEMENT

Copyright subsists in this drawing and vests in Eskom Rotek Industries SOC Ltd. The drawing and it's notations,unless otherwise indicated,also constitute confidential information which is the property of Eskom Rotek Industries SOC Ltd. Eskom Rotek Industries SOC Ltd relies,for the protection of it's interests,on the statutory and common law rights as aforesaid and any unauthorised copying or use of this drawing or it's contents would result in infringement of such rights.

IF IN DOUBT ASK

Additional notes:
For additional information see Sht 1 of 2
3D data for 3D model printing or pattern making can be obtained from Eskom Rotek Industries Engineering department upon request.

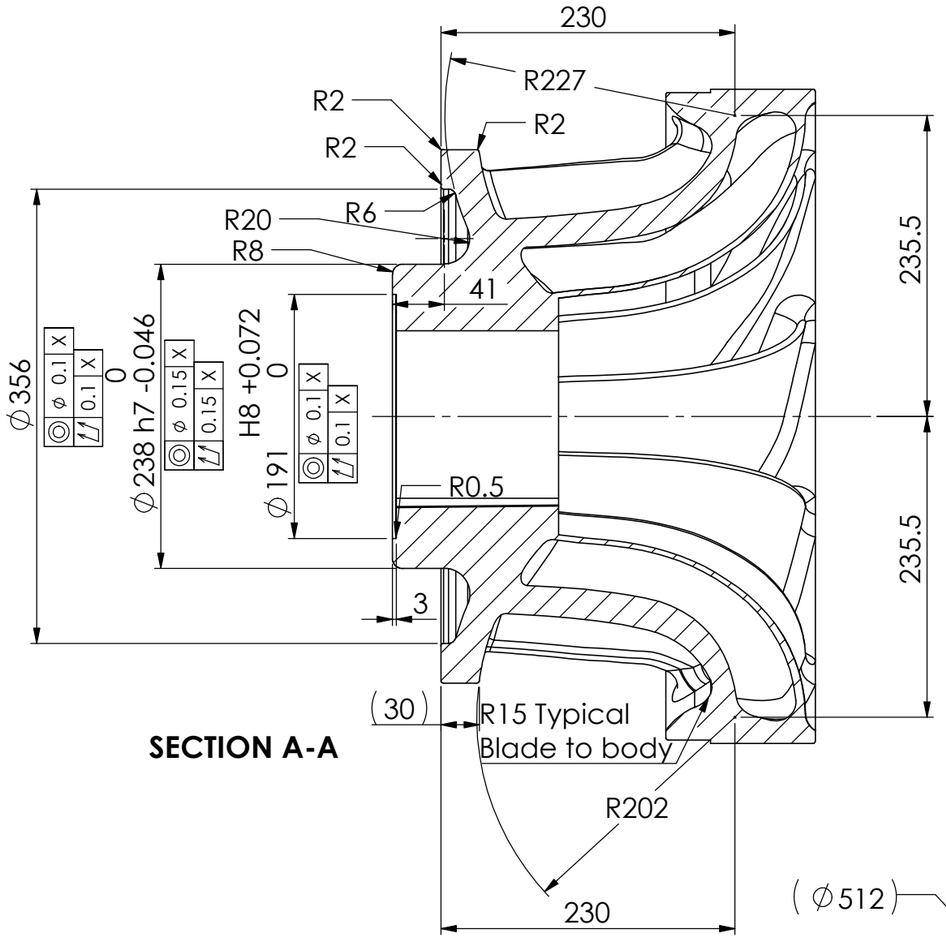

SECTION A-A

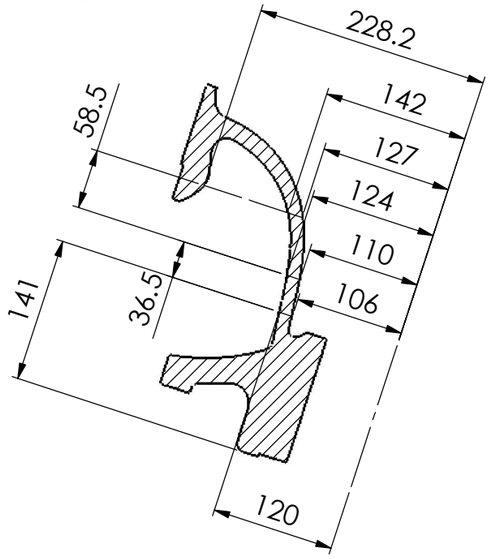

SECTION E-E

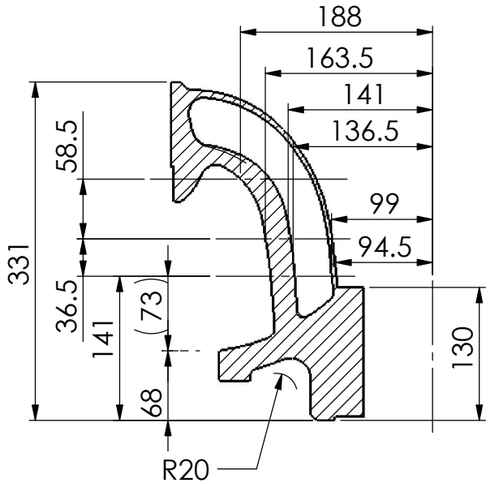

SECTION C-C

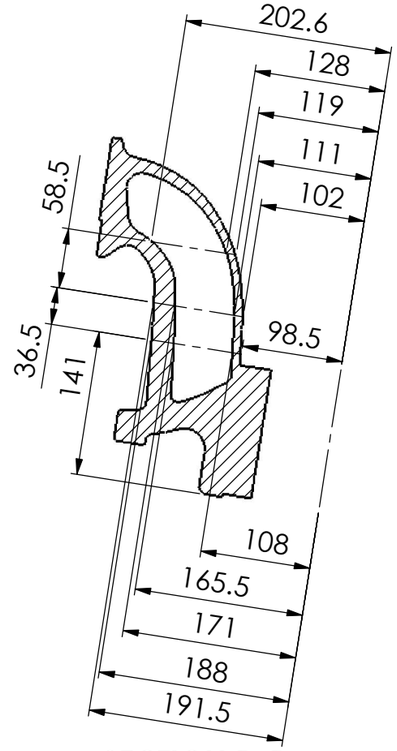

SECTION D-D

Notes:
1. Remove all burrs and sharp edges
2. General tolerances ± 0.1 mm U.O.S.
3. Angular tolerances ±0.5° U.O.S.
4. Dimensions in brackets (...) are for information only
5. Machining 1.6 followed by polishing 0.4

Finish: Clean, ultrasonic and dye penetrant tested, test certificates to be provided,

Additional finish: After polishing, CA6NM runner to be either Electroless Nickel Plated 12 to 15 Microns or titanium carbide coated, 10 to 15 microns,certificates to be provided.

Material: ASTM A487/A473 CA6NM - Normalized and tempered, material, heat treatment, test certificates and 2 test coupons to be provided.

FOR QUOTATION PURPOSE ONLY

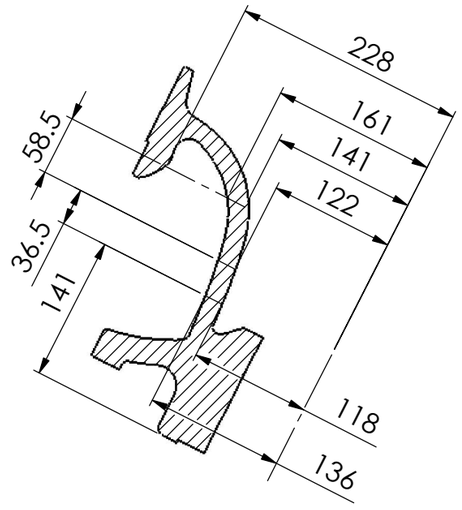

SECTION F-F

SECTION N-N

PRJ No.	JOB No.	REV	DATE	REVISION DESCRIBTION	REV BY	CHKD BY	AUTH BY	APPR BY	REFERENCE DRAWINGS
TEE-L-572	TOD-L-9423								

REVISION 0 - ONLY			
DESIGN APPR			
DO AUTH	2020/07/30		
CHKD BY	2020/07/29	B Matodzi	
DRAWN BY	2019/12/23	T Ramphele	

1. DRAWING FILE PATH- Y:\Engineering Development\Drawing Office\TOD-L-9423 Ncora Hydro PS\03_Cad_Data\Models_Drawings\
2. MODEL FILE PATH- Y:\Engineering Development\Drawing Office\TOD-L-9423 Ncora Hydro PS\03_Cad_Data\Models_Drawings\

TITLE
NCORA HYDRO POWER STATION
UNIT 1
HORIZONTAL HYDRO TURBINE
RUNNER
PART

Eskom Rotek Industries

APPROVED BY	DATE	DRAWING No.	SHEET	REV
	31.07.2020	13.25_8350	2 OF 3	0

SCALE: **DO NOT SCALE**

SIZE A3L

DRAWING COPYRIGHT STATEMENT

Copyright subsists in this drawing and vests in Eskom Rotek Industries SOC Ltd. The drawing and it's notations,unless otherwise indicated,also constitute confidential information which is the property of Eskom Rotek Industries SOC Ltd. Eskom Rotek Industries SOC Ltd relies,for the protection of it's interests,on the statutory and common law rights as aforesaid and any unauthorised copying or use of this drawing or it's contents would result in infringement of such rights.

IF IN DOUBT ASK

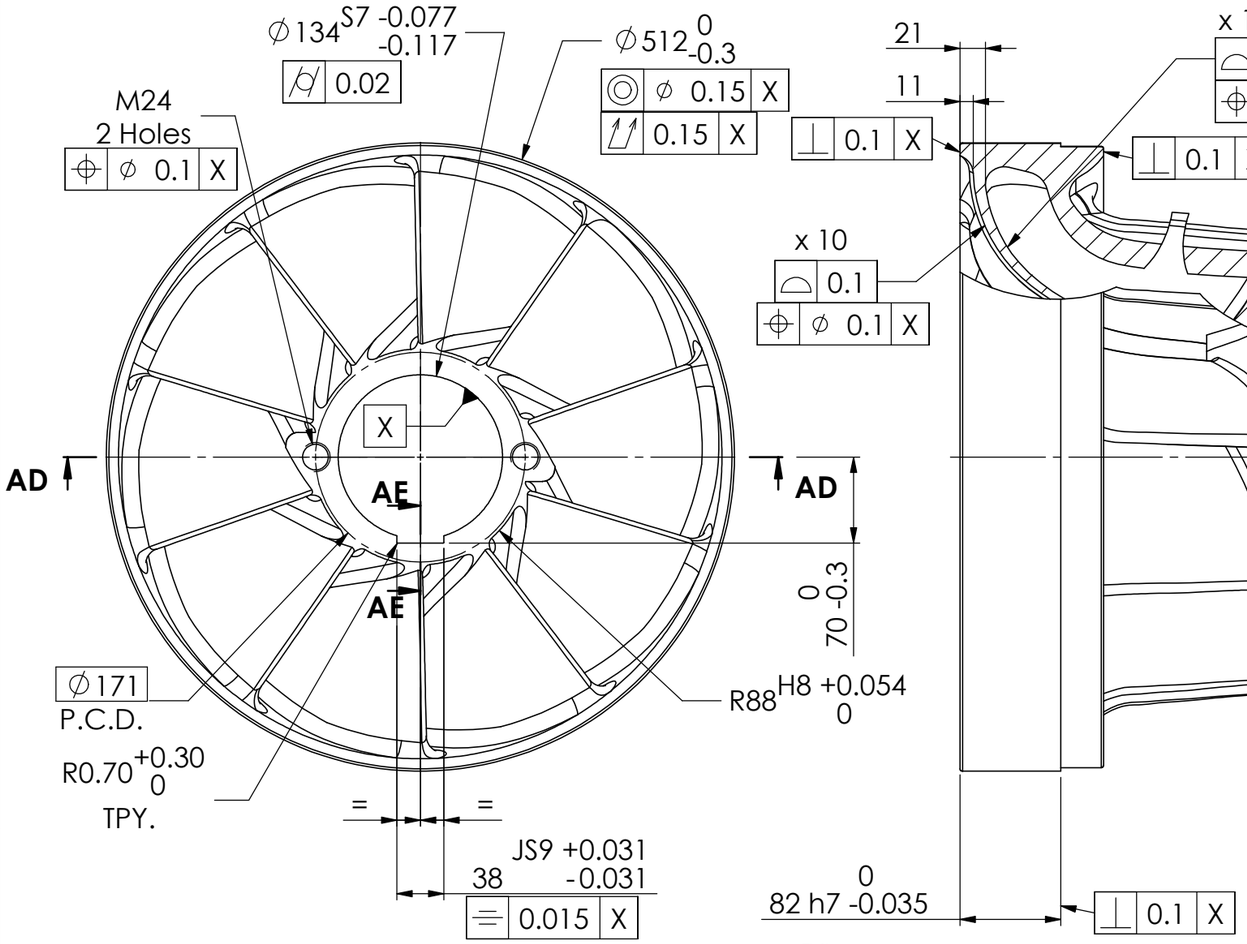

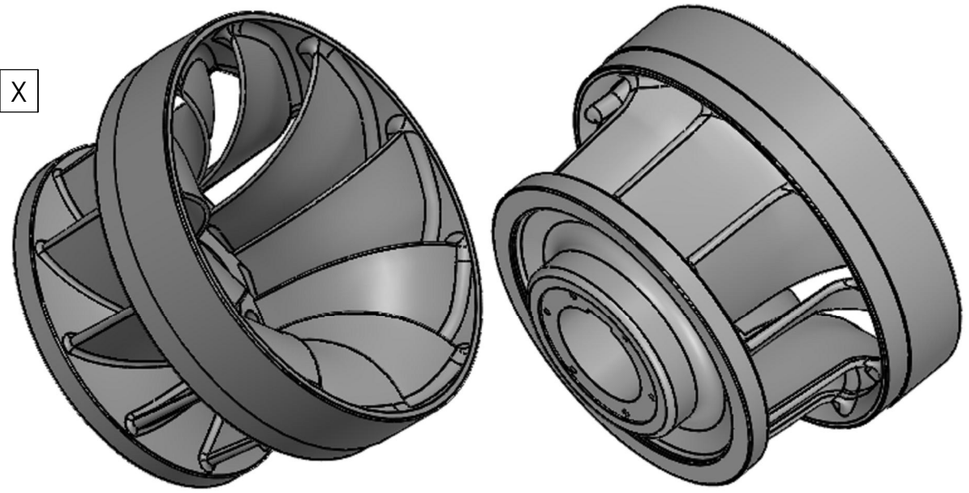

ISOMETRIC VIEWS

FOR QUOTATION PURPOSE ONLY

Notes:

1. Remove all burrs and sharp edges
2. General tolerances ± 0.1 mm U.O.S.
3. Angular tolerances ±0.5° U.O.S.
4. Dimensions in brackets (...) are for information only
5. Machining 1.6 followed by polishing 0.4

Finish: Clean, ultrasonic and dye penetrant tested, test certificates to be provided,

Additional finish: After polishing, CA6NM runner to be either Electroless Nickel Plated 12 to 15 Microns or titanium carbide coated, 10 to 15 microns,certificates to be provided.

Material: ASTM A487/A473 CA6NM - Normalized and tempered, material, heat treatment, test certificates and 2 test coupons to be provided.

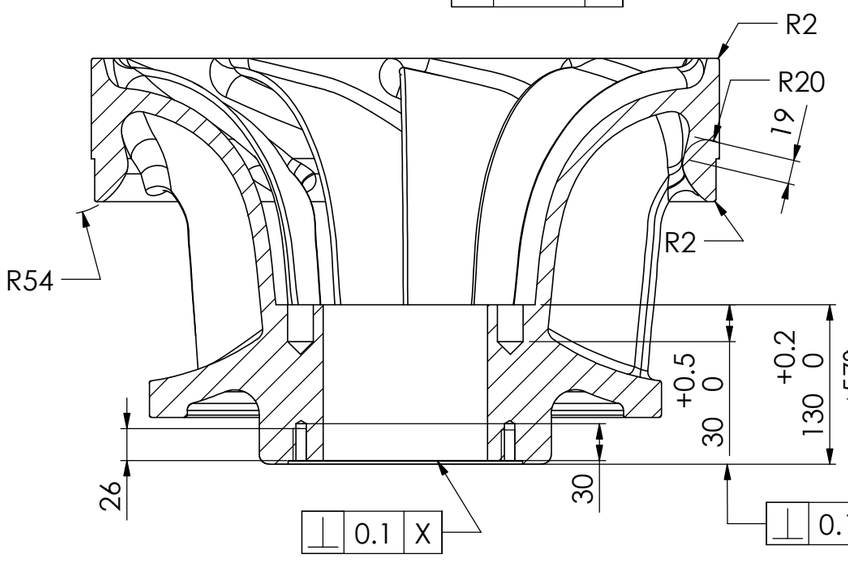

SECTION AD-AD

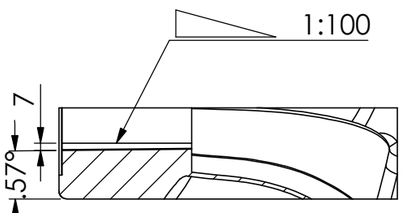

SECTION AE-AE

Additional notes:
For additional information see Sht 1 of 2
3D data for 3D model printing or pattern making can be obtained from Eskom Rotek Industries Engineering department upon request.

PRJ No.	JOB No.	REV	DATE	REVISION DESCRIBTION	REV BY	CHKD BY	AUTH BY	APPR BY	REFERENCE DRAWINGS
TEE-L-572	TOD-L-9423								

REVISION 0 - ONLY			
	DESIGN APPR		
	DO AUTH	2020/07/30	
	CHKD BY	2020/07/29	B Matodzi
	DRAWN BY	2019/12/23	T Ramphele

1. DRAWING FILE PATH- Y:\Engineering Development\Drawing Office\TOD-L-9423 Ncora Hydro PS\03_Cad_Data\Models_Drawings\
2. MODEL FILE PATH- Y:\Engineering Development\Drawing Office\TOD-L-9423 Ncora Hydro PS\03_Cad_Data\Models_Drawings\

TITLE

NCORA HYDRO POWER STATION
UNIT 1
HORIZONTAL HYDRO TURBINE
RUNNER
DETAILS

Eskom
Rotek Industries

APPROVED BY	DATE	DRAWING No.	SHEET	REV
	31.07.2020	13.25_8350	3 OF 3	0

SCALE: DO NOT SCALE

SIZE A3L