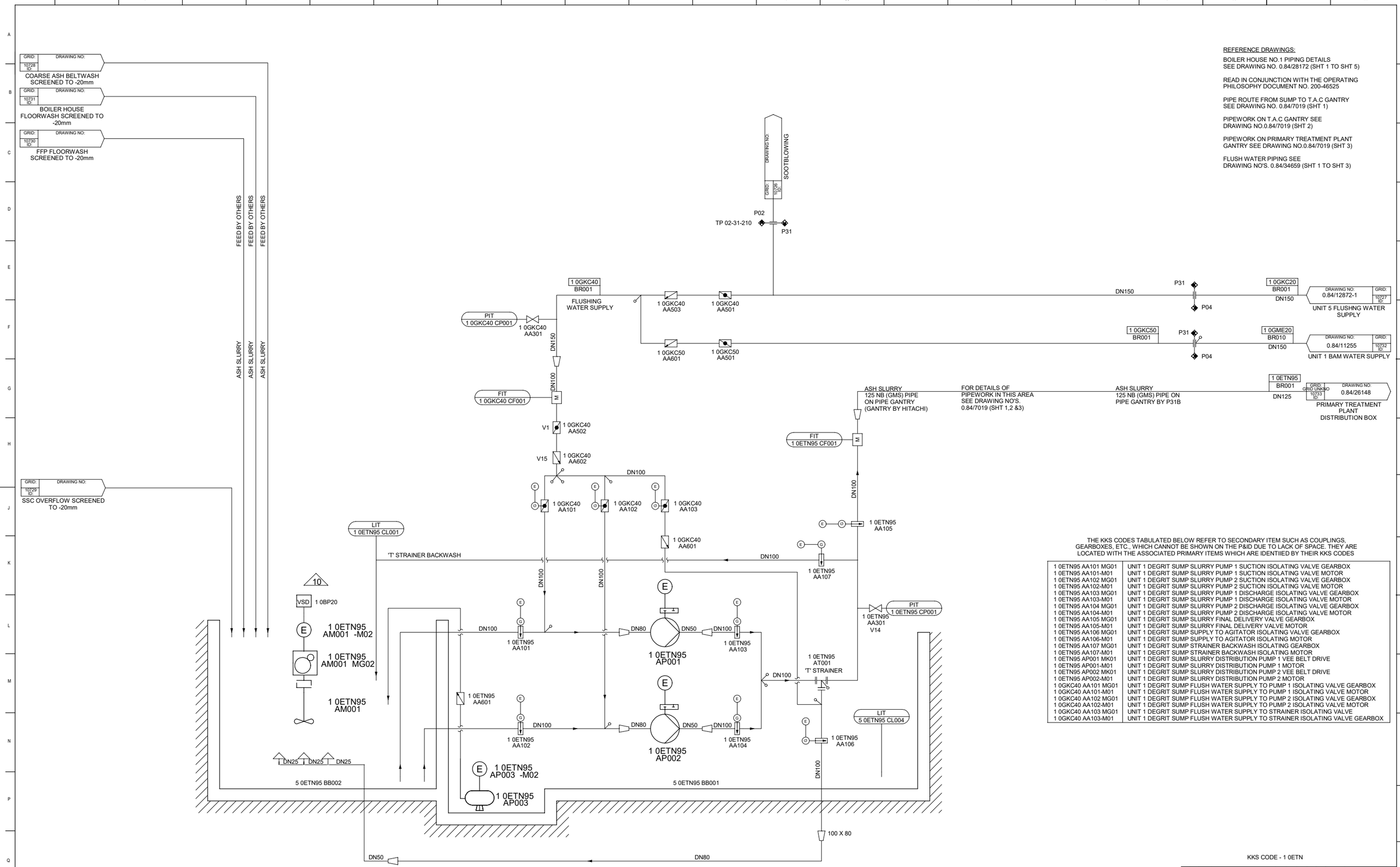

REFERENCE DRAWINGS:

BOILER HOUSE NO.1 PIPING DETAILS
SEE DRAWING NO. 0.84/28172 (SHT 1 TO SHT 5)

READ IN CONJUNCTION WITH THE OPERATING PHILOSOPHY DOCUMENT NO. 200-46525

PIPE ROUTE FROM SUMP TO T.A.C GANTRY
SEE DRAWING NO. 0.84/7019 (SHT 1)

PIPEWORK ON T.A.C GANTRY SEE
DRAWING NO.0.84/7019 (SHT 2)

PIPEWORK ON PRIMARY TREATMENT PLANT
GANTRY SEE DRAWING NO.0.84/7019 (SHT 3)

FLUSH WATER PIPING SEE
DRAWING NO'S. 0.84/34659 (SHT 1 TO SHT 3)

THE KKS CODES TABULATED BELOW REFER TO SECONDARY ITEM SUCH AS COUPLINGS, GEARBOXES, ETC., WHICH CANNOT BE SHOWN ON THE P&ID DUE TO LACK OF SPACE. THEY ARE LOCATED WITH THE ASSOCIATED PRIMARY ITEMS WHICH ARE IDENTIIED BY THEIR KKS CODES

1 0ETN95 AA101 MG01	UNIT 1 DEGRIT SUMP SLURRY PUMP 1 SUCTION ISOLATING VALVE GEARBOX
1 0ETN95 AA101-M01	UNIT 1 DEGRIT SUMP SLURRY PUMP 1 SUCTION ISOLATING VALVE MOTOR
1 0ETN95 AA102 MG01	UNIT 1 DEGRIT SUMP SLURRY PUMP 2 SUCTION ISOLATING VALVE GEARBOX
1 0ETN95 AA102-M01	UNIT 1 DEGRIT SUMP SLURRY PUMP 2 SUCTION ISOLATING VALVE MOTOR
1 0ETN95 AA103 MG01	UNIT 1 DEGRIT SUMP SLURRY PUMP 1 DISCHARGE ISOLATING VALVE GEARBOX
1 0ETN95 AA103-M01	UNIT 1 DEGRIT SUMP SLURRY PUMP 1 DISCHARGE ISOLATING VALVE MOTOR
1 0ETN95 AA104 MG01	UNIT 1 DEGRIT SUMP SLURRY PUMP 2 DISCHARGE ISOLATING VALVE GEARBOX
1 0ETN95 AA104-M01	UNIT 1 DEGRIT SUMP SLURRY PUMP 2 DISCHARGE ISOLATING VALVE MOTOR
1 0ETN95 AA105 MG01	UNIT 1 DEGRIT SUMP SLURRY FINAL DELIVERY VALVE GEARBOX
1 0ETN95 AA105-M01	UNIT 1 DEGRIT SUMP SLURRY FINAL DELIVERY VALVE MOTOR
1 0ETN95 AA106 MG01	UNIT 1 DEGRIT SUMP SUPPLY TO AGITATOR ISOLATING VALVE GEARBOX
1 0ETN95 AA106-M01	UNIT 1 DEGRIT SUMP SUPPLY TO AGITATOR ISOLATING MOTOR
1 0ETN95 AA107 MG01	UNIT 1 DEGRIT SUMP STRAINER BACKWASH ISOLATING GEARBOX
1 0ETN95 AA107-M01	UNIT 1 DEGRIT SUMP STRAINER BACKWASH ISOLATING MOTOR
1 0ETN95 AP001 MK01	UNIT 1 DEGRIT SUMP SLURRY DISTRIBUTION PUMP 1 VEE BELT DRIVE
1 0ETN95 AP001-M01	UNIT 1 DEGRIT SUMP SLURRY DISTRIBUTION PUMP 1 MOTOR
1 0ETN95 AP002 MK01	UNIT 1 DEGRIT SUMP SLURRY DISTRIBUTION PUMP 2 VEE BELT DRIVE
1 0ETN95 AP002-M01	UNIT 1 DEGRIT SUMP SLURRY DISTRIBUTION PUMP 2 MOTOR
1 0GKC40 AA101 MG01	UNIT 1 DEGRIT SUMP FLUSH WATER SUPPLY TO PUMP 1 ISOLATING VALVE GEARBOX
1 0GKC40 AA101-M01	UNIT 1 DEGRIT SUMP FLUSH WATER SUPPLY TO PUMP 1 ISOLATING VALVE MOTOR
1 0GKC40 AA102 MG01	UNIT 1 DEGRIT SUMP FLUSH WATER SUPPLY TO PUMP 2 ISOLATING VALVE GEARBOX
1 0GKC40 AA102-M01	UNIT 1 DEGRIT SUMP FLUSH WATER SUPPLY TO PUMP 2 ISOLATING VALVE MOTOR
1 0GKC40 AA103 MG01	UNIT 1 DEGRIT SUMP FLUSH WATER SUPPLY TO STRAINER ISOLATING VALVE
1 0GKC40 AA103-M01	UNIT 1 DEGRIT SUMP FLUSH WATER SUPPLY TO STRAINER ISOLATING VALVE GEARBOX

KKS CODE - 1 0ETN

AS-BUILT

S.O.	REV	DATE	REVISION	REV BY	CHKD BY	APP BY	AUTH BY	CODE APP	REFERENCE DRAWINGS
	12	19.04.24	SMARTPLANT REDRAW	EH	MM				
	11	31.05.18	TP FOR SOOTBLOWER ADDED	ACP	AP	AP	JP		
	10	12.06.16	KKS FOR VSD CHANGED	ACP	AP	AP	JP		

AUTHORISED FOR ENGINEERING
CLASSIFICATION BY:
APPROVED BY:
CHECKED BY: M MOLABE 19.04.2024
DRAWN/CAD BY: E HLATSHWAYO 17.04.2024
SCALE: NTS

CLASSIFICATION: D00043
PBS PATH: GKC, ETN

Eskom
ESKOM HOLDINGS SOC Ltd
REG No. 2002/015527/30

MEDUPI POWER STATION

PIPING & INSTRUMENTATION DIAGRAM

Unit 1

ASH WASHDOWN- COLLECTION AND TREATMENT
BOILER HOUSE SUMPS

ESKOM DRAWING NO: 0.84/26142
SHT: 1
REV: 12

DRAWING CLASSIFICATION
SIZE: A0ADOTTIC A0L