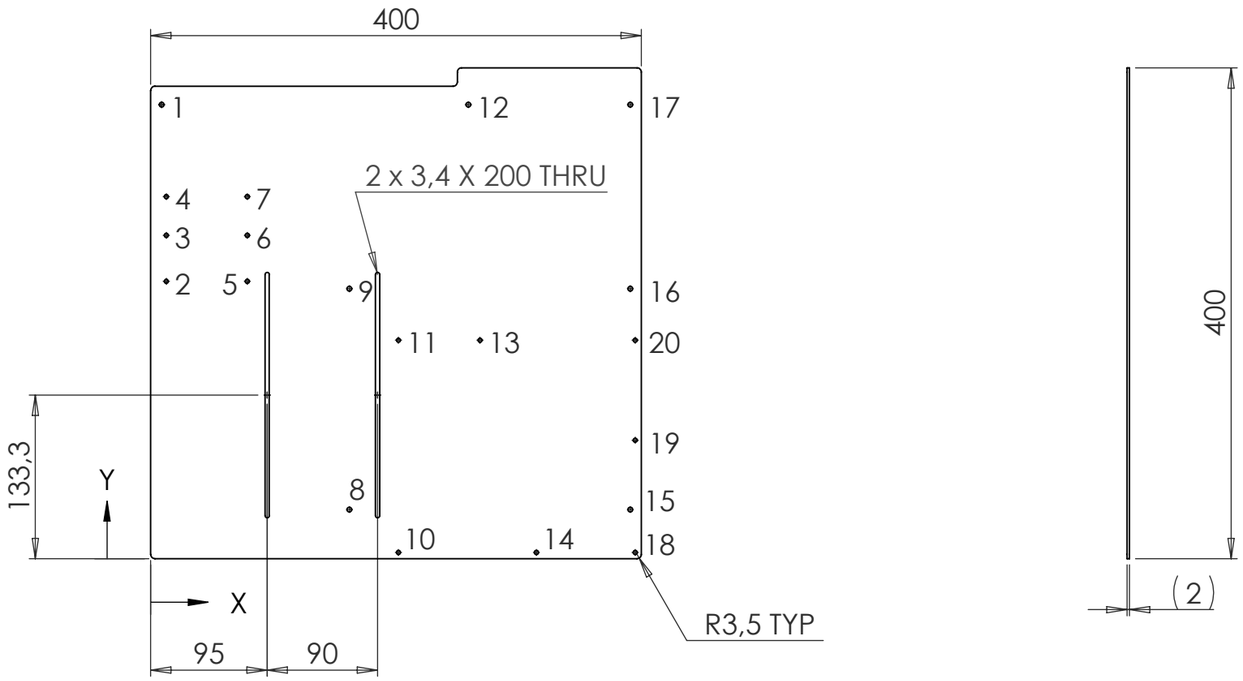

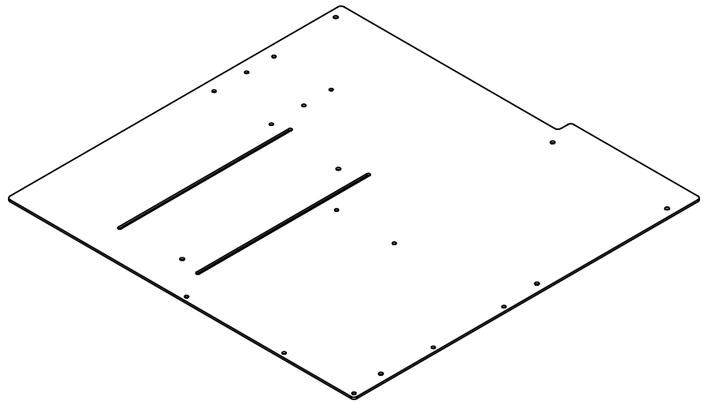

TAG	X LOC	Y LOC	SIZE
1	9	370	∅ 3,9 THRU
8	162	40	∅ 3,9 THRU
9	162	220	∅ 3,9 THRU
12	259	370	∅ 3,9 THRU
15	391	40	∅ 3,9 THRU
16	391	220	∅ 3,9 THRU
17	391	370	∅ 3,9 THRU
2	12,8	226	∅ 3,4 THRU
3	12,8	263,5	∅ 3,4 THRU
4	12,8	295	∅ 3,4 THRU
5	78,8	226	∅ 3,4 THRU
6	78,8	263,5	∅ 3,4 THRU
7	78,8	295	∅ 3,4 THRU
10	202	5	∅ 3,4 THRU
11	202	178	∅ 3,4 THRU
13	268,5	178	∅ 3,4 THRU
14	314,5	5	∅ 3,4 THRU
18	395	5	∅ 3,4 THRU
19	395	96,5	∅ 3,4 THRU
20	395	178	∅ 3,4 THRU

NOTES:
1. PART TO BE FREE OF SCRATCH MARKS AND INDENTATIONS
2. ASSOCIATED DXF FILE R4000-0006_1_1.DXF (FOR INFORMATION ONLY)

MATERIAL	ALUMINIUM GRADE 1050 H14		DRAWN	STRESS	APPROVED	QA	ECR	NRF National Research Foundation / SARAO South African Radio Astronomy Observatory	DESCRIPTION: CHASSIS BASE PLATE	
STOCK SIZE	SHEET, 2 mm THICK		TJM	N/R	JL	JC	N/A			
DEBURR	REMOVE BURRS AND SHARP EDGES TO 0.5 mm MAX		06 Nov 2025		11 Nov 2025	20 Nov 2025				
SURFACE TREATMENT	NONE		STATUS: RELEASED			A3	©	DIMENSIONS IN MM	IDENTIFIER: R4000-0006	DESIGN VERSION: 1 / DRAWING REVISION: 1
TOLERANCE	GENERAL TO ISO 2768 CLASS mH - U.O.S.	DRAWING STANDARD: BS 8888:2013	SCALE 1:5		SHEET 1 OF 1					