ITEM 1 & 5 - UPPER & LOWER WEARING RING
MATERIAL:- PHOSPHOR BRONZE PB 1-C TO BS 1400: 1973
MACHINE WHERE SHOWN THUS ▽
TOLERANCE ON MACHINED SIZES UNLESS OTHERWISE STATED ±0.25

ITEM: 2 LYBYRINTH SEAL RING, ALUMINIUM, LM4 (EN 1706 AC-45200)

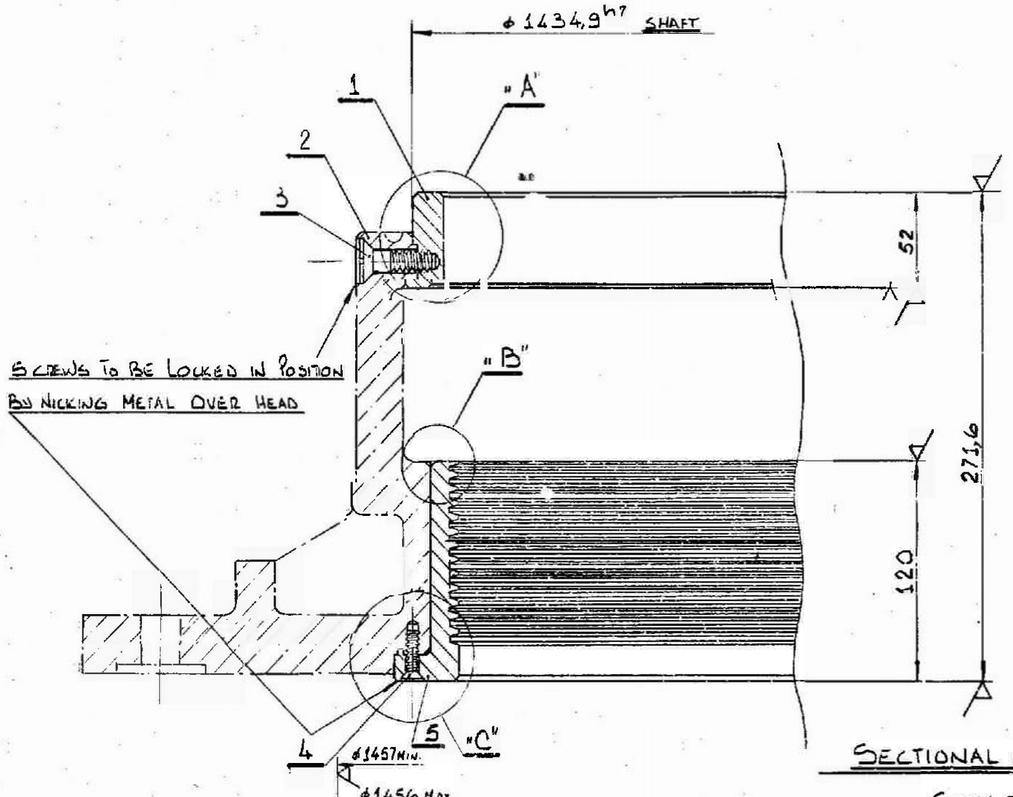

SECTIONAL ARRANGEMENT
SCALE 1:2,5

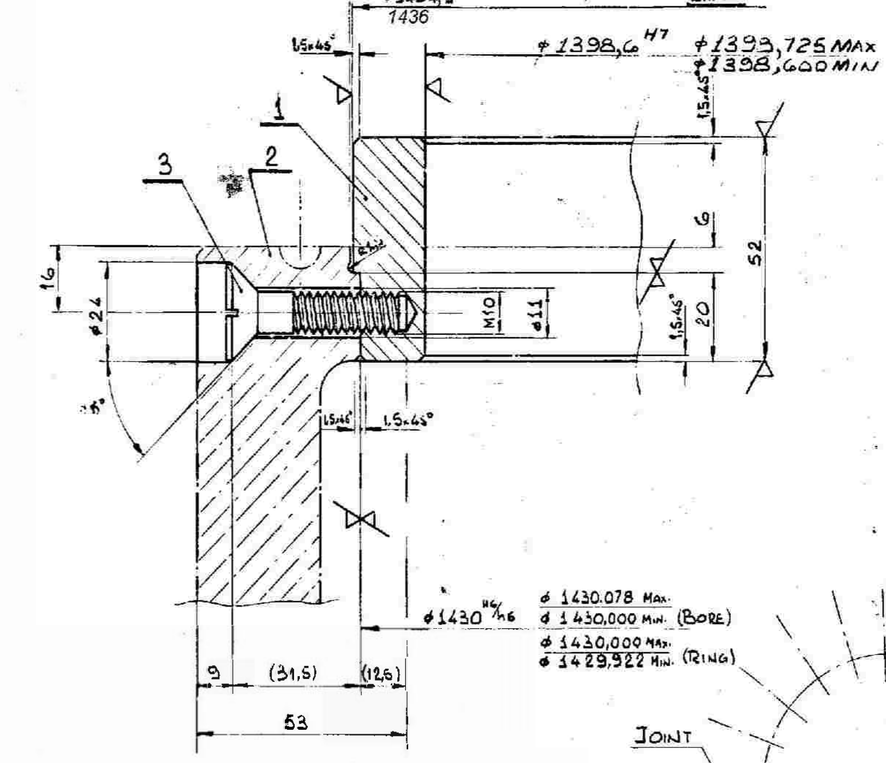

DETAIL "A"
SCALE 1:1

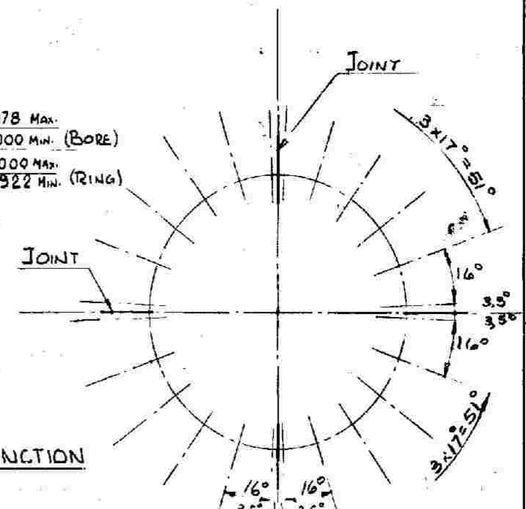

BOLT POSITIONING ITEM 3

NOTE
THIS DRG. TO BE READ IN CONJUNCTION WITH DRG. 13·45/304

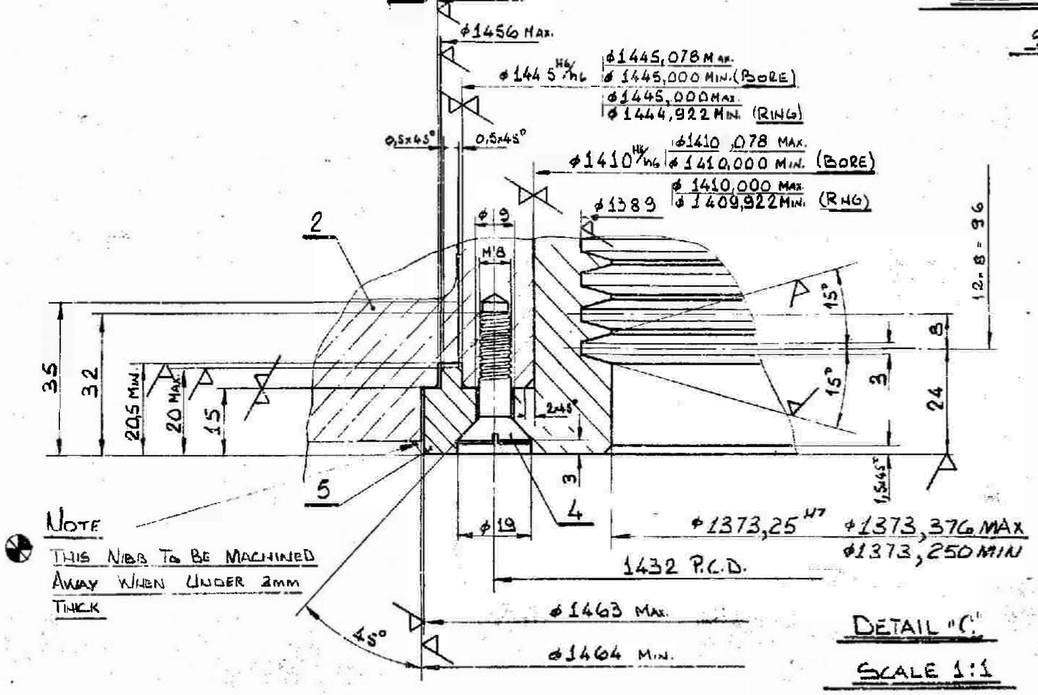

NOTE
THIS NIBB TO BE MACHINED AWAY WHEN UNDER 2mm THICK

DETAIL "C"
SCALE 1:1

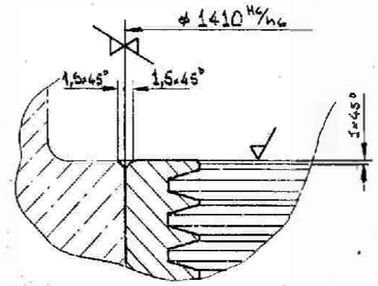

DETAIL "B"
SCALE 1:1

ITEM	DESIGNATION	NO OFF	MATERIAL	REMARKS
5	LOWER WEARING RING	1	SEE NOTE	FOUR SEGMENT
4	M8x30 LG "UNBRAKO" C/SK. SOCKET SCREW	24	H.T.S.	STANDARD
3	M10x45 LG "UNBRAKO" C/SK. SOCKET SCREW	24	H.T.S.	STANDARD
2	LABYRINTH SEAL RING	1	SEE NOTE	EXISTING
1	UPPER WEARING RING	1	SEE NOTE	FOUR SEGMENTS

REV	AUTH MAG	DATE DAY LM	REVISIONS/REVISIES INDEX REF/ INDEKSVERW	BY DEUR	CHKD NAGES	REFERENCE DRAWINGS VERWYSINGS TEKENINGE
						13·45/304 REPLACEMENT LABYRINTH SEAL RING DTLS
2		12/20	LABYRINTH SEAL RING CHANGED MATERIAL TO ALUMINIUM	W.B.		13·45/193 ORIGINAL WEARING RING DTLS
1	RVN	16/2/83	* NOTE ADDED AND BOLT POSITIONING CHANGED.	JVN		0.45/9130 GENERAL ARRANGEMENT
0			FIRST ISSUE / EERSTE UITREIKING			13.45/1760 ORIGINAL LABYRINTH SEALRING

DRG-TEK REGIS TR
CHKD NAGES
DRAWN GETEKEN JVN 9/11/81
SCALE SKAAL 1:25; 1:1

C.M.S.S. LTD
ROSHERVILLE

OPERATIONS DEPT. ESCOM • EVKOM BEDRYFSDEPT
KRIEL POWER STATION
B L R3 SIDE & W PF MILLS REPLACEMENT
LABYRINTH SEAL RING - WEARING RINGS
DETAILS

13·45/305
REV 2

OZALID E.S.C. 2
SIZE GROOTTE - A2L -