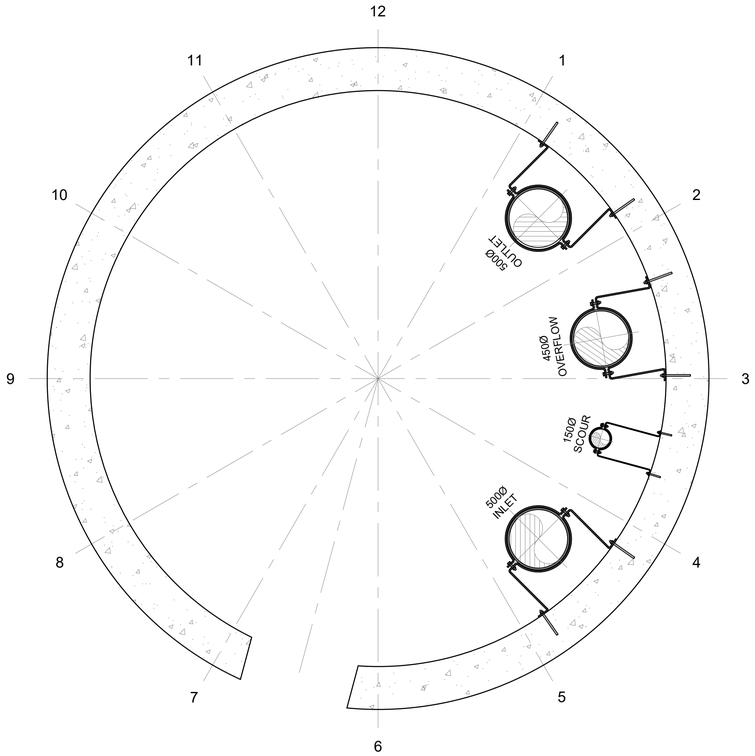

STAINLESS STEEL PIPE CLAMP LAYOUT

SCALE 1:25

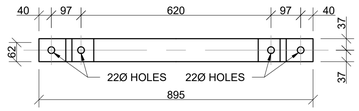

FRONT VIEW

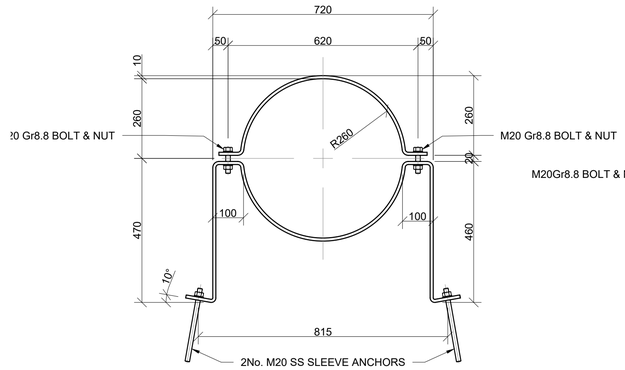

TOP VIEW

500Ø SS PIPE CLAMP DETAIL

SCALE 1:10

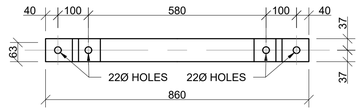

FRONT VIEW

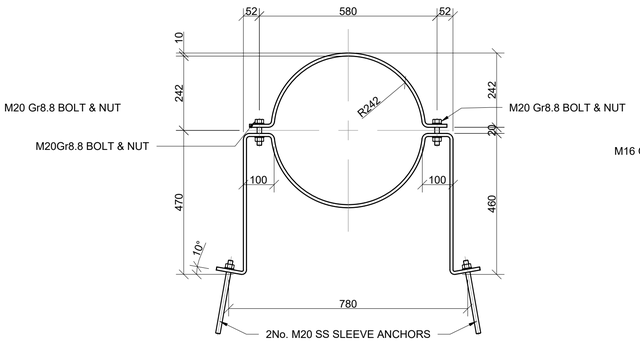

TOP VIEW

450Ø SS PIPE CLAMP DETAIL

SCALE 1:10

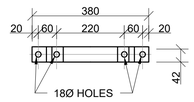

FRONT VIEW

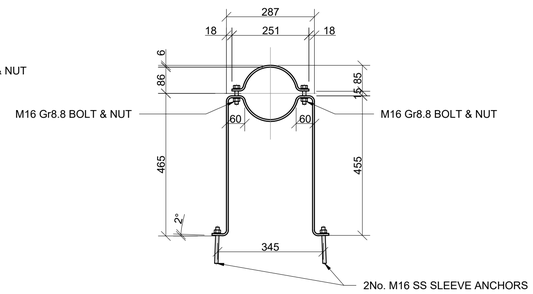

TOP VIEW

150Ø SS PIPE CLAMP DETAIL

SCALE 1:10

FOR TENDER ONLY

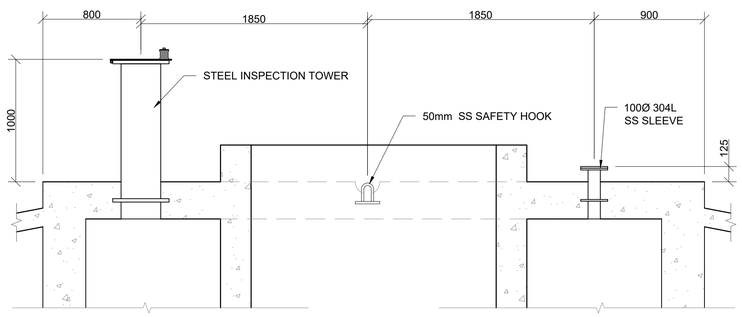

TYPICAL ROOF SECTION

SCALE 1:25

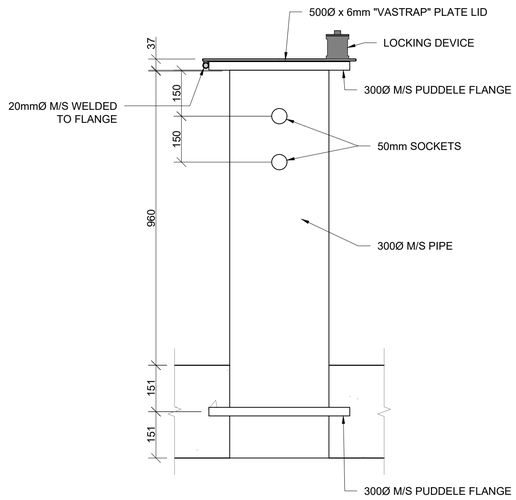

INSPECTION TOWER DETAIL

SCALE 1:10

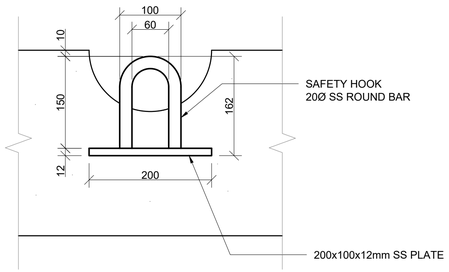

SAFETY HOOK DETAIL

SCALE 1:5

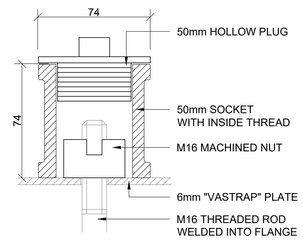

LOCKING DEVICE

SCALE 1:2

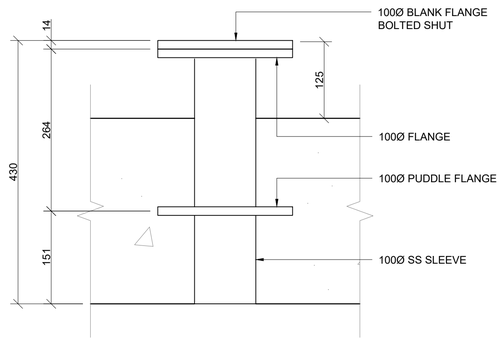

SS SLEEVE DETAIL

SCALE 1:5

CONSULTING ENGINEERS:	DESIGNED	P. S. Botha	05/08/2024
TRI-M CONSULTING ENGINEERS	DRAWN	J. Nel	05/08/2024
WEWORK	CHECKED	P. S. BOTHA	05/08/2024
155 WEST STREET	APPROVED BY:		
SANDTON, JOHANNESBURG	P. S. Botha	SIGNATURE	DATE
	ECSA REG. No.		
CLIENT POSTAL ADRESS:	CHECKED		
JOHANNESBURG WATER			
P O BOX 61542			
MARSHALLTOWN		SIGNATURE	DATE
2107			

PHYSICAL ADDRESSES:
65 NTEMI PILISO STREET
NEWTOWN
JOHANNESBURG

TEL: (011) 688-1400
FAX: (011) 688-1529

Turffontein Corridors of Freedom
Water Upgrade
Foresthill Tower and Pump Station

G.A STEEL WORK ITEMS, PART C
PIPE CLAMPS & ROOF ITEMS

SURVEY INFORMATION		APPROVAL BY JW DEPOT			SCALE		AMENDMENTS	
PROJECT SURVEYOR:		CHECKED			1: 30; 1: 15	REV:	DESCRIPTION	DATE:
		APPROVED BY:				0	TENDER PURPOSES	26/01/2026
DATE:			SIGNATURE	DATE				
CCTV INFORMATION		APPROVAL BY JW PLANNING						
CCTV COMPANY:		CHECKED						
		APPROVED BY:						
DATE:			SIGNATURE	DATE				

JW14402 — CONTRACT NUMBER
ST05.1 — DRAWING No.
A — REV.
A1 — ORIGINAL PAGE SIZE
SHEET 1 OF 1
FILE No.