DRG. No. 9942

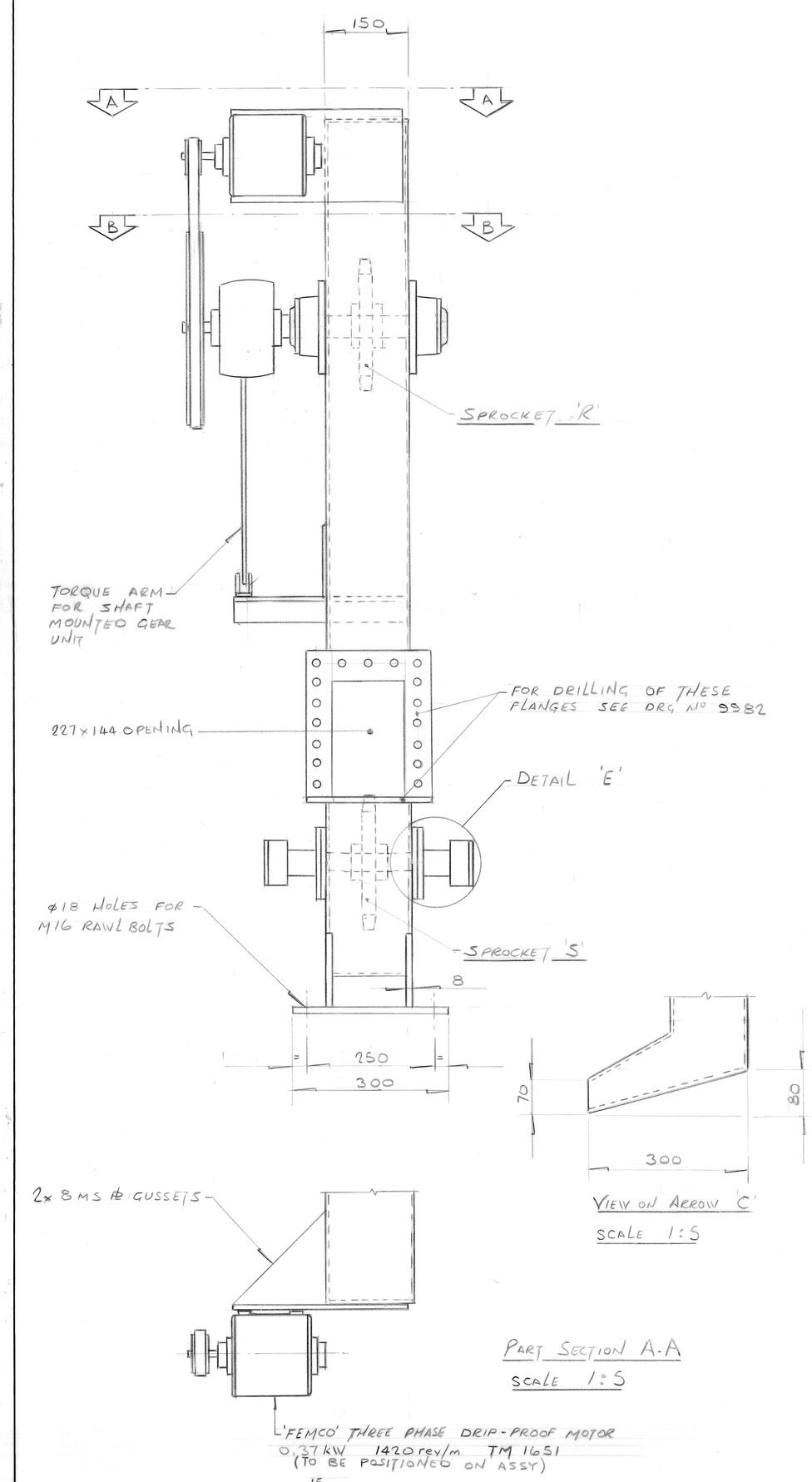

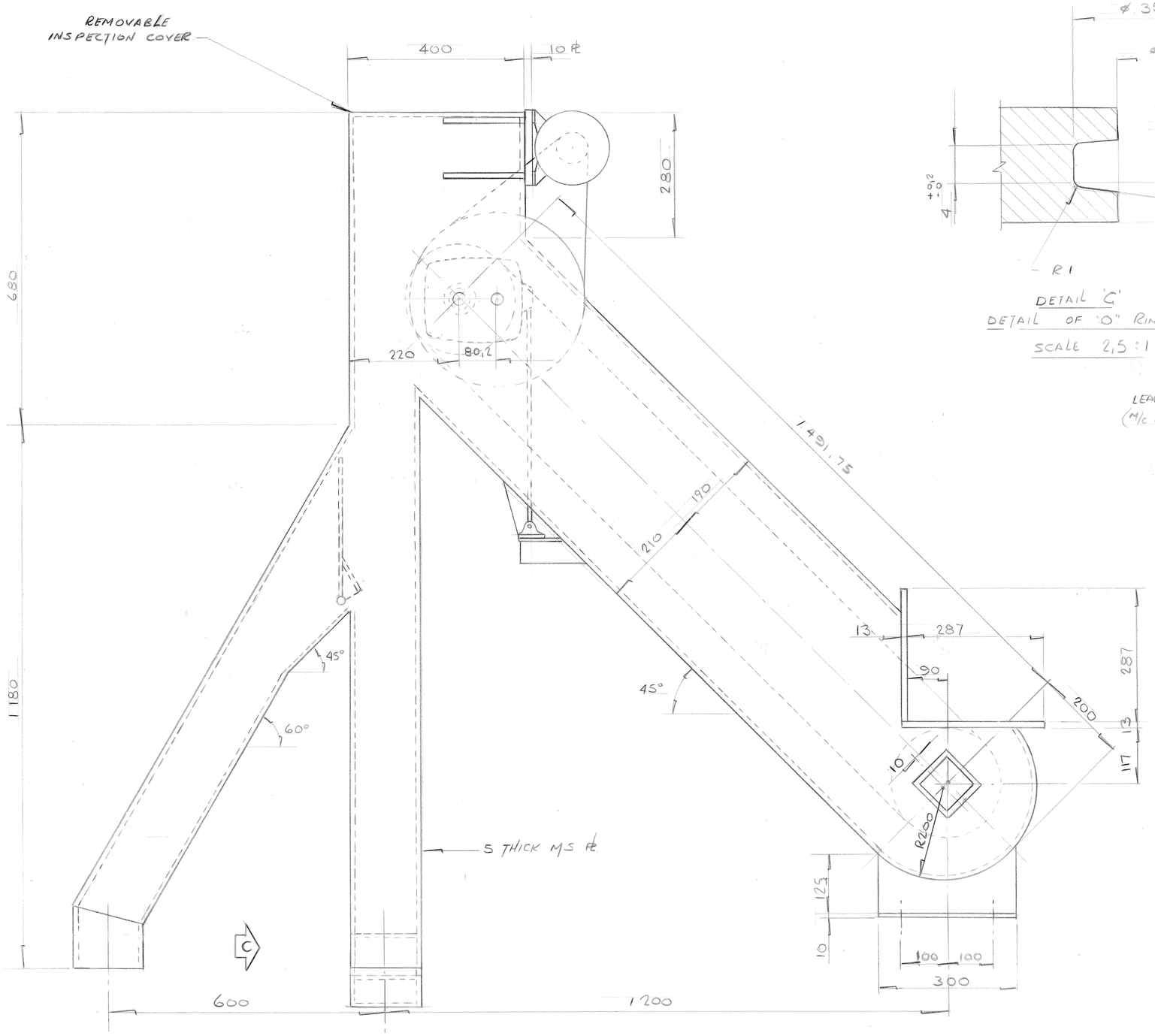

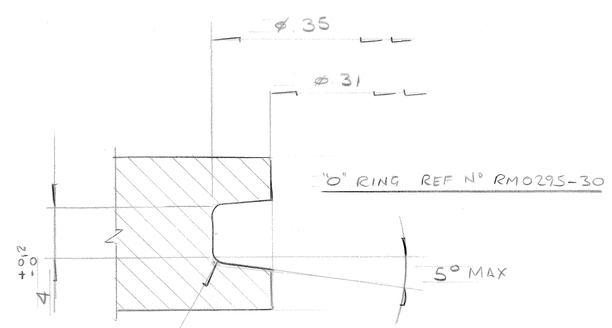

DETAIL 'G'
DETAIL OF 'O' RING GROOVE
SCALE 2,5:1

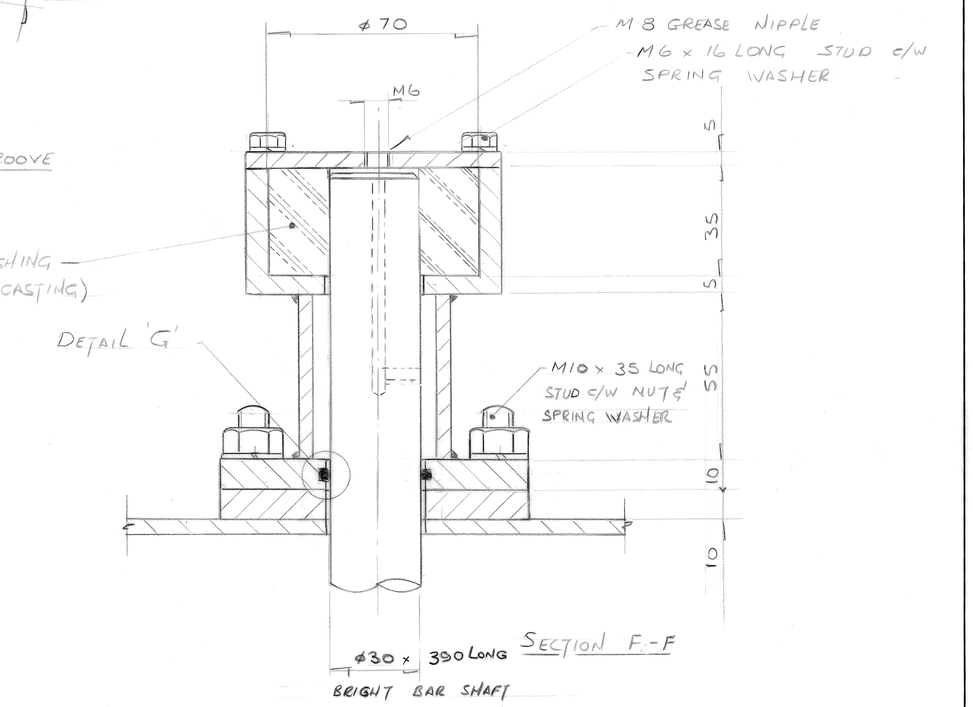

SECTION F-F

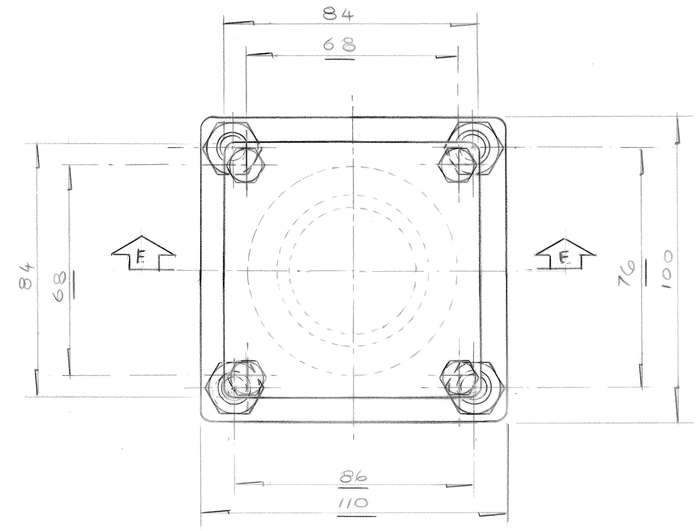

DETAIL E
SCALE 1:1

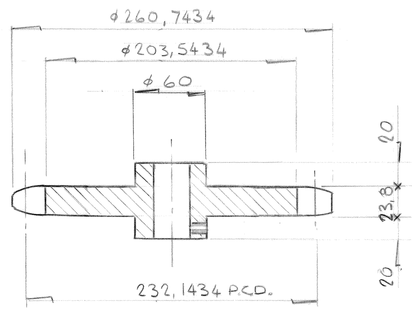

SECTION D.D.

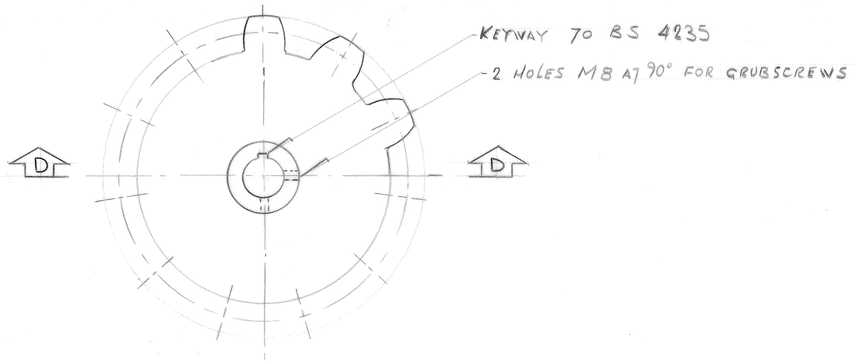

DETAIL OF SPROCKETS R AND S.
SPROCKET R TO BE BORED ø40 H7
SPROCKET S TO BE BORED ø30 H7
SCALE 1:2,5

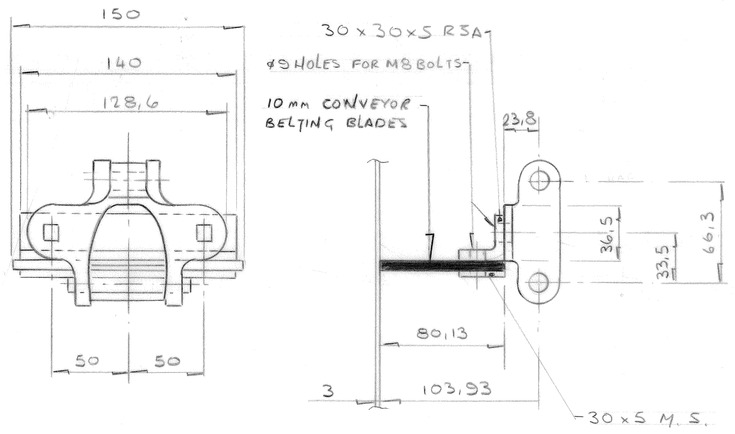

DETAIL OF CHAIN LINK
(AMERICAN 'H' CLASS Nº 78 CHAIN)
SCALE 1:2

MICROFILMED
IF ANY ALTERATIONS ARE MADE TO THIS DRAWING NOTIFY ENG. RECORDS

STATION	WKS	DOC. TYPE	S
VG	AOGBH	DMD	A

No.	CHECKED	DATE	APPROVED	REVISION	DRG. No.	REFERENCES
					9943	G A OF ROTARY SLAKER
					9982	CONSTANT LEVEL TANK
					9652	G A OF SLAKER HOUSE

JOB No.	81/4001/03
W.O. No.	4061
CONTRACT No.	1567
SCHEME	1982
SCALE	1:5 OR AS STATED
DATE	86 03 26
DRAWN BY	F T H
TRACED BY	
CHECKED BY	
APPROVED BY	

MICROFILMED
IF ANY ALTERATIONS ARE MADE TO THIS DRAWING NOTIFY ENG. RECORDS

RAND WATER BOARD

VEREENIGING PUMPING STATION
LIME PLANT Nº1 - SLAKER HOUSE Nº2
DETAILS OF CLASSIFIER FOR LIME SLAKING MACHINES

DRG. No. 9942/1567

L.H. JAMES
Pr. Eng.
CHIEF ENGINEER

Ozalid 1 276