ITEM NO.	

FOR UNTOLERANCED DIMENSIONS SEE ISO 2768-1: DESIGNATION
FOR GENERAL TOLERANCE ON WELDED CONSTRUCTIONS SEE ISO 13920: CLASS

M		2D STATUS	IN WORK
A	E		

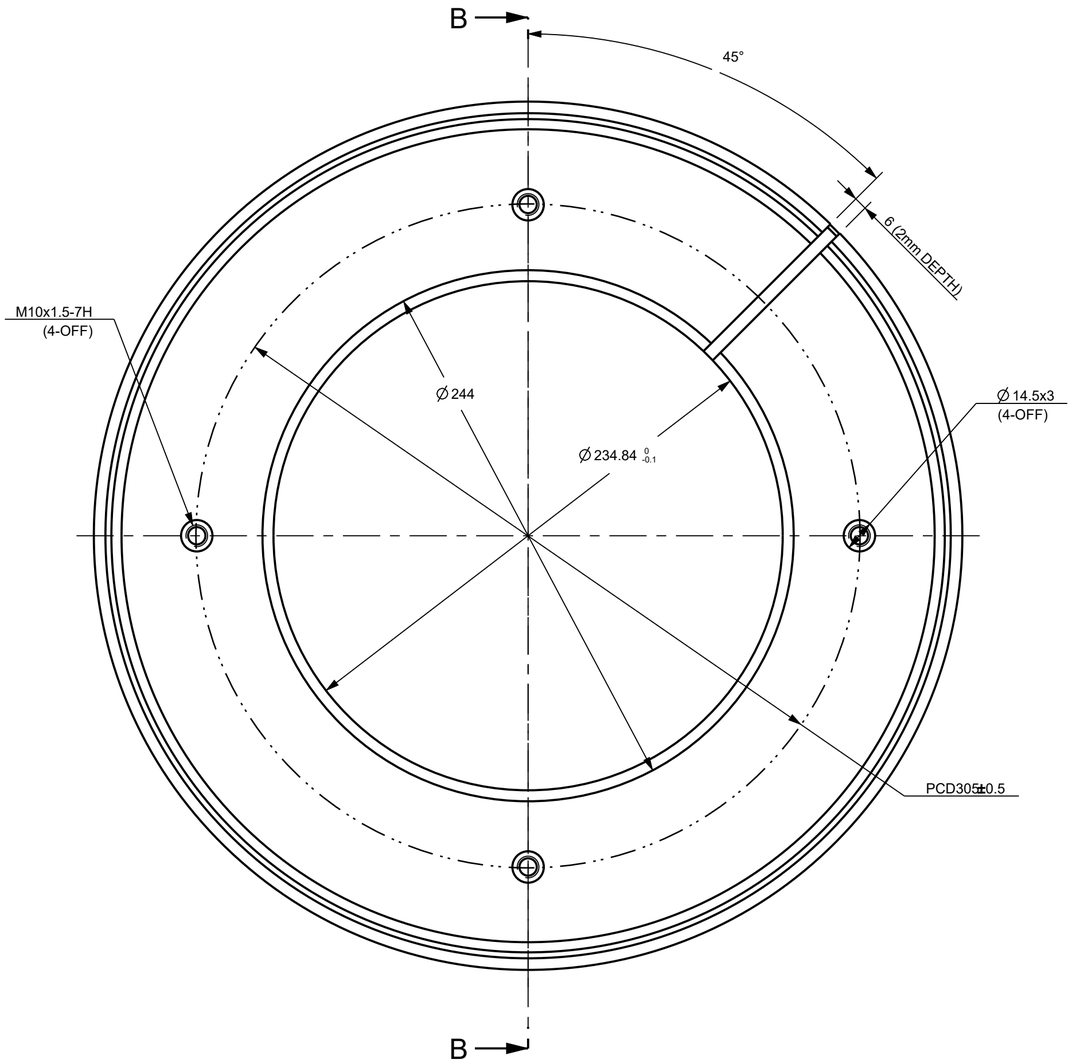

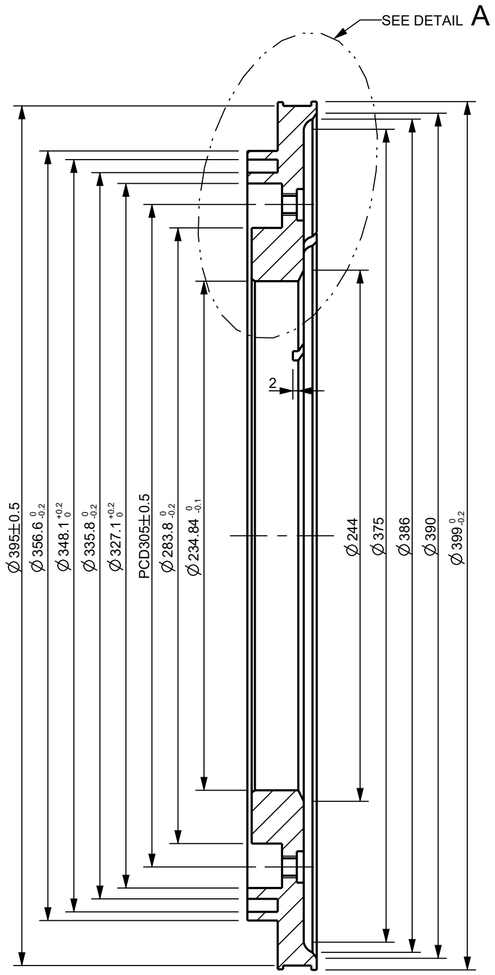

SECTION B-B

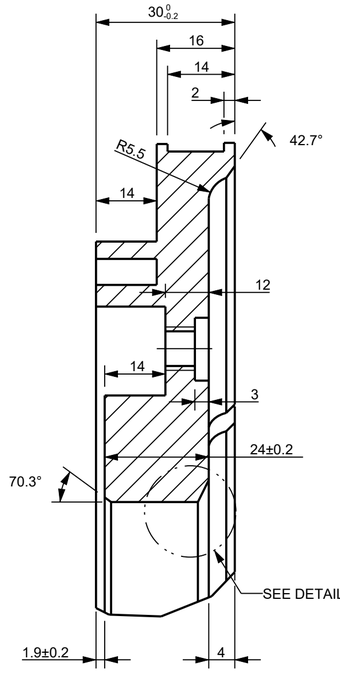

DETAIL A
SCALE 1:1

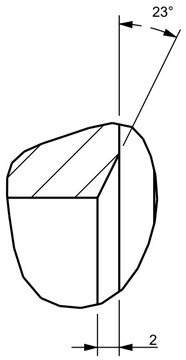

DETAIL B
SCALE 2:1

SURFACE ROUGHNESS MUST BE 3.2 ▽.

AMENDMENTS	
MASS	10.57 Kg

COPYRIGHT
THIS DRAWING TOGETHER WITH THE COPYRIGHT IS THE PROPERTY OF
TRANSNET
THIS DRAWING OR ANY PART THEREOF IS NOT TO BE COPIED OR OTHERWISE REPRODUCED OR USED FOR MANUFACTURE OR ANY OTHER PURPOSE WITHOUT THE WRITTEN PERMISSION FROM
CHIEF EXECUTIVE,
TRANSNET ENGINEERING

ASSEMBLY DRG No.	- -	DRAWN	M.N.
-	- -	CHECKED	N.T.N.
CLASS	20-22E	APPROVED	B.E.D.
TYPE	LOCOMOTIVE	DATE	2022/01/24
-		SCALE	1:2

A-2 PROJECTION

DOCUMENT REFERENCE No. PD_PELG_KP_DRW_176Z

KILNER PARK WHEELS

COLLAR

-

-

SHEET 1 OF 1

MATERIAL

STEEL
SANS 50025 GR-S355 JR+AR
PLATE 30
Ø400

TRANSNET ENGINEERING

No. PELG_176Z_0623

REV. -